2430 R

Registered No. C207 *No. 27 of 1931*

The Calcutta Gazette

THURSDAY, JULY 2, 1931.

CONTENTS:

	PAGE.
PART I.—Orders and Notifications by the Governor of Bengal, the Government of Bengal, the High Court, Government Treasury, etc.	765—784
PART IA.—Orders and Notifications by the Government of India republished for general information	173—174
PART IB.—Educational Notices ..	735—765
PART II.—Advertisements	633—650
PART III.—Acts of the Bengal Legislative Council	*Nil*
PART IV.—Bills introduced in the Bengal Legislative Council, Reports of Select Committees presented or to be presented to that Council, and Bills published before introduction in that Council—	
Report of the Select Committee on the Bengal Village Self-Government (Amendment) Bill, 1931, with the Bill as amended by the Committee ..	55—59
Report of the Select Committee on the Bengal Municipal (Amendment) Bill, 1931, with the Bill as amended by the Committee	60—64
PART V.—Acts of the Indian Legislature assented to by the Governor General and Ordinances promulgated under section 72 of the Government of India Act ..	*Nil*
PART VI.—Bills introduced in the Council of State and Legislative Assembly, Reports of Select Committees presented to the Council and Assembly and Bills published under Rule 18 of the Indian Legislative Rules	*Nil*
SUPPLEMENT No. 27—	
Gifts made by private individuals of the Chittagong Division during the year 1930-31	869
Corporation of Calcutta Notice—Calcutta Improvement Trust Notices and Accounts of Sinking Funds—Weekly Vital Statistics—Daily gauge-readings—Cotton Ginning and Pressing—Weekly Weather and Crop Report—Prices-current—Weekly gauge-readings	870—901
Resolution on the Budget Estimates of income and expenditure of the Howrah Bridge for the year 1931-32 ..	902

Part I

Orders and Notifications by the Governor of Bengal, the Government of Bengal, the High Court, Government Treasury, etc.

ORDERS BY HIS EXCELLENCY THE GOVERNOR OF BENGAL.

Tour Programme of His Excellency the Governor of Bengal during July 1931.

Government House, Darjeeling, the 27th June 1931.

His Excellency the Governor of Bengal will leave Calcutta on the evening of Saturday, the 4th July, and will arrive at Simla (Summer Hill) on the forenoon of the 6th idem. He will again leave Simla (Summer Hill) on the afternoon of the 9th idem and will arrive at Calcutta on the morning of the 11th July.

The party accompanying His Excellency will be—

The Hon'ble Lady Jackson.
J. D. Tyson, Esq., I.C.S., Private Secretary.
Lieut.-Col. W. A. K. Fraser, C.B.E., D.S.O., M.V.O., M.C., Military Secretary.
Captain J. V. Gordon, Aide-de-Camp.
Captain J. E. Ross, Aide-de-Camp.

All arrivals and departures will be private.

All communications intended to reach His Excellency and party should be addressed to Governor's Camp, Bengal, without the addition of any post town.

W. A. K. FRASER, LIEUT.-COLONEL,
Mily. Secy. to H. E. the Governor of Bengal.

ORDERS BY THE GOVERNMENT OF BENGAL.

No. 5074A.

Leave.

GENERAL.

Dacca.—No. 5012A.—26th June 1931.—Mr. Premananda Nag, Deputy Magistrate and Deputy Collector, Narayanganj, Dacca, is allowed leave on average pay for seventeen days, under rule 81 (*b*) (*ii*) of the Fundamental Rules, with effect from the 14th July 1931.

R. N. REID,
Chief Secy. to the Govt. of Bengal (offg.).

NOTIFICATIONS.

No. 1260A.D.—23rd June 1931.—In notification No. 711A., dated the 26th January 1931, published at pages 104-106 of the *Calcutta Gazette*, dated the 29th January 1931, announcing the result of the second half-yearly departmental examination held in November 1930—

(*i*) *Omit* the following from clause (*g*) under Second or Higher Standard:—

J. Mackie ... Bengali.

(*ii*) *Insert* the following under First or Lower Standard:—

(*e*) The Irrigation Department officer, named below, has passed in the subject noted against his name:—

J. Mackie ... Bengali.

No. 5017A.—27th June 1931.—The Governor in Council is pleased to grant, under sub-section (2) of section 86 of the Government of India Act, to the Hon'ble Alhadj Sir Abdelkerim Ghuznavi, KT., a Member of the Council of the Governor of Bengal, leave of absence for urgent reasons of private affairs for a period of two weeks, in extension of the leave granted to him under the orders contained in notification No. 74 A.D., dated the 13th April 1931.

No. 5020 A.—29th June 1931.—The Hon'ble Alhadj Sir Abdelkerim Ghuznavi, KT., Member of the Executive Council of the Governor of Bengal, on return from the leave of absence announced in notifications No. 74 A.D., dated the 13th April 1931, and No. 5017A., dated the 27th June 1931, resumed charge of his office in the forenoon of the 29th June 1931.

R. N. REID,
Chief Secy. to the Govt. of Bengal (offg.).

NOTICE.

Calcutta, the 27th June 1931.

A competitive examination for admission to the Indian Civil Service will be held at Delhi beginning on the 4th January 1932. The latest date for the receipt of applications by District Officers (in the case of Calcutta, the Commissioner of Police) is the 15th August 1931.

2. Copies of the prescribed application form together with the rules, regulations, syllabus, etc., of the examination may be obtained on application from the Chief Secretary to the Government of Bengal, Writers' Buildings, Calcutta.

R. N. REID,
Chief Secy. to the Govt. of Bengal (offg.).

POLITICAL DEPARTMENT.

Political.

NOTIFICATION.

No. 10905P.—29th June 1931.—In exercise of the power conferred by section 99A of the Code of Criminal Procedure, 1898 (Act V of 1898), the Governor in Council hereby declares to be forfeited to His Majesty all copies, wherever found, of a Bengali book entitled "Satabdir Sangit" by Bibekananda Mukhopadhya, published by the author from 2, Shama Charan De Street, Calcutta, and printed by Nishi Kanta Das from the Sadhana Press, Dacca, on the ground that the said book contains matter which brings or attempts to bring into hatred or contempt and excites or attempts to excite disaffection towards the Government established by law in British India, the publication of which is punishable under section 124A of the Indian Penal Code.

R. N. REID,
Chief Secy. to the Govt. of Bengal (offg.).

JUDICIAL DEPARTMENT.

No. 5075A.

Powers.

Murshidabad.—No. 1258A.D. — 23rd June 1931.—Babu Binay Bhusan Chaudhuri, Sub-Deputy Magistrate, on probation, Murshidabad, is vested with the powers of a Magistrate of the third class.

Tippera.—No. 1283A.D.—24th June 1931.—Maulvi Atikar Rahman Mahmud, Deputy Magistrate, on probation, Tippera, is vested with the powers of a Magistrate of the third class.

R. N. REID,
Chief Secy. to the Govt. of Bengal (offg.).

Appointments and Transfers.

Burdwan - Pabna - Bogra - Mymensingh.—No. 4774J.—24th June 1931.—Maulvi Velayet Hossain Mollah, munsif of Burdwan (Sadar), now employed as an additional munsif at Sirajganj, in the district of Pabna and Bogra, is appointed to be a munsif in the district of Mymensingh, to be ordinarily stationed at Kishoreganj, but for the present to be employed as an additional munsif at Sirajganj, in the district of Pabna and Bogra.

Burdwan.—No. 4777J.—24th June 1931.—Babu Gobinda Prasad Palit, officiating additional munsif of Burdwan (Sadar), is appointed to act, until further orders, as a munsif in the same district, to be ordinarily stationed at the Sadar station.

Mymensingh-Midnapore. — No. 4779J. — 24th June 1931.—Maulvi Abdur Rabban, munsif of Kishoreganj, now employed at Netrakona, in the district of Mymensingh, is appointed to be a munsif in the district of Midnapore, to be ordinarily stationed at the Sadar station, *vice* Babu Sharat Chandra De.

Mymensingh-Chittagong. — No. 4782J. — 24th June 1931.—Maulvi Syed Alla Hafez, officiating munsif of Mymensingh (Sadar), is appointed to act, until further orders, in the same capacity, but for the present to be employed as an additional munsif at North Raojan, in the district of Chittagong.

Dacca.—No. 4796J.—25th June 1931.—In exercise of the powers conferred by section 14 and the proviso to section 357 of the Code of Criminal Procedure, 1898 (Act V of 1898), the Governor in Council is pleased—

(*a*) to confer upon Rai Debendra Chandra Mazumdar Bahadur the powers of a Magistrate of the first class, in the district of Dacca, for a period of three years from the 29th July 1931 in respect to such cases as may be made over to him sitting at Narayanganj within the limits of the Narayanganj subdivision of the said district and

(*b*) to direct him to take down evidence in the English language.

Mymensingh.—No. 4798J. — 25th June 1931.—In exercise of the powers conferred by sections 14 and 15 and the proviso to section 357 of the Code of Criminal Procedure, 1898 (Act V of 1898), the Governor in Council is pleased—

(*a*) to confer upon Babu Kshitish Chandra Chaudhuri the powers of a Magistrate of the third class, in the district of Mymensingh, for a period of three years from the 13th July 1931, in respect to such cases as may be made over to him within the limits of the Sadar subdivision of the said district,

(*b*) to direct that he shall, in addition to sitting singly, sit as a member of the Sadar bench in the said district, and

(*c*) to direct him to take down evidence in the English language.

Mymensingh.—No. 4800J. — 25th June 1931.—In exercise of the powers conferred by sections 14 and 15 and the proviso to section 357 of the Code of Criminal Procedure, 1898 (Act V of 1898), the Governor in Council is pleased—

(*a*) to confer upon Babu Annada Prasad Chakrabatti Chaudhuri the powers of a Magistrate of the third class, in the district of Mymensingh, for a period of three years from the 13th July 1931,

(*b*) to direct him to sit as a member of the Sadar bench in the said district, and

(*c*) to direct him to take down evidence in the English language.

Leave.

No. 4831J.—16th May 1931.—Babu Debendra Nath Sen Gupta, munsif, is allowed leave on average pay, on medical certificate, for one month, under the proviso to rule 81 (*b*) (*ii*) of the Fundamental Rules, in extension of the leave granted to him under the orders of the 27th March 1931.

Noakhali.—No. 4832J.—25th May 1931.—Babu Matish Chandra Banarji, munsif of Hatiya, in the district of Noakhali, is allowed leave for the period from the 27th April to the 13th June 1931, viz., leave on average pay for one month and four days, under rules 81 (*b*) (*ii*) and 82 (*b*) of the Fundamental Rules, and leave on half average pay for the remaining period, under rule 81 (*d*) of those rules, in supersession of the leave granted to him under the orders of the 17th April 1931.

Dacca.—No. 4833J.—25th May 1931.—Babu Kiran Kumar Bhattacharji, munsif of Narayanganj, in the district of Dacca, is allowed leave for one year and ten months, viz., leave on half average pay for one year, three months and four days, under rule 81 (*d*) of the Fundamental Rules, and extraordinary leave for the remaining period, under rule 85 (*a*) of those rules, with effect from the 15th September 1931, in supersession of the leave granted to him under the orders of the 1st December 1930.

Rangpur.—No. 4834J.—25th May 1931.—Babu Janardan Prasad Mukharji, munsif of Gaibandha, in the district of Rangpur, is allowed leave on average pay up to the 27th May 1931, under rules 81 (*b*) (*ii*) and 82 (*b*) of the Fundamental Rules, in extension of the leave granted to him under the orders of the 2nd May 1931.

Dinajpur.—No. 4835J.—1st June 1931.—Babu Brajendra Saran Sanyal, munsif of Balurghat, in the district of Dinajpur, is allowed leave on average pay for one month, under rules 81 (*b*) (*ii*) and 82 (*b*) of the Fundamental Rules, with effect from the 4th June 1931.

Rajshahi-Malda.—No. 4836J.—1st June 1931.—Babu Nikunja Bihari Banarji, munsif of Nator, in the district of Rajshahi and Malda, is allowed leave on average pay for one day, viz., the 27th May 1931, under rules 81 (*b*) (*ii*) and 82 (*b*) of the Fundamental Rules.

24-Parganas.—No. 4903J.—11th June 1931.—Babu Kshirada Ranjan Dhar, officiating Subordinate Judge, 24-Parganas, is allowed leave on average pay up to the 27th May 1931, under rules 81 (*b*) (*ii*) and 82 (*b*) of the Fundamental Rules, in extension of the leave granted to him under the orders of the 11th May 1931.

Faridpur.—No. 4904J.—12th June 1931.—Maulvi Badiuzzaman Ahmad, munsif of Bhanga, in the district of Faridpur, is allowed leave on half average pay for two months, under rule 81 (*d*) of the Fundamental Rules, with effect from the 16th June 1931.

Mymensingh.—No. 4905J.—13th June 1931.—Babu Dinesh Charan Ray, munsif, who lately acted as Subordinate Judge, Mymensingh, is allowed leave on average pay, on medical certificate, for four months, under the proviso to rules 81 (*b*) (*ii*) and 82 (*b*) of the Fundamental Rules, with effect from the 16th May 1931.

Noakhali.—No. 4906J.—16th June 1931.—Babu Nalini Nath Das Gupta, munsif, acting as Third Additional Subordinate Judge, Noakhali, is allowed leave on average pay for the period from the 13th May to the 2nd June 1931, under rules 81 (*b*) (*ii*) and 82 (*b*) of the Fundamental Rules.

Noakhali.—No. 4907J.—18th June 1931.—Babu Matish Chandra Banarji, munsif of Hatiya, in the district of Noakhali, is allowed leave on half average pay up to the 30th June 1931, under rule 81 (*d*) of the Fundamental Rules, in extension of the leave granted to him under the orders of the 25th May 1931.

Jessore.—No. 4908J. — 19th June 1931.—Babu Pankaj Nath Gupta, munsif of Magura, in the district of Jessore, is allowed leave on average pay up to the 13th June 1931, under rules 81 (*b*) (*ii*) and 82 (*b*) of the Fundamental Rules, in extension of the leave granted to him under the orders of the 9th May 1931.

Chittagong.—No. 4909J.—19th June 1931.—Babu Jamini Kishor Ray, munsif of Patiya, in the district of Chittagong, is allowed leave on average pay for the period from the 12th to the 14th April 1931, under rules 81 (*b*) (*ii*) and 82 (*b*) of the Fundamental Rules, in extension of the leave granted to him under the orders of the 19th March 1931.

NOTIFICATIONS.

Dacca.—No. 4808J.—25th June 1931.—In exercise of the power conferred by section 65 of the Bengal Village Self-Government Act, 1919 (Bengal Act V of 1919), the Governor in Council is pleased to appoint the following members of the union boards mentioned below, to be, during their term of office as such members, union benches within the jurisdiction of the union boards of which they are, respectively, members for the purposes of that section :—

Narayanganj subdivision, district Dacca.

Monohardi police-station.

Ekduaria union board.

Babu Harendra Kishore Sen Gupta.

Babu Manindra Chandra Sen.

Maulvi Muhammad Ismail Hossain Bhuiya.

Maulvi Shujat Ali Bhuiya.

Maulvi Muhammad Dengu Bhuiya.

Barchapa union board.

Babu Amulya Kumar Ray.

Babu Harendra Chandra Saha.

Munshi Jahiruddin.

Munshi Muhammad Abdur Rahman Pandit.

2. This notification will take effect from the date of the first meeting of the reconstituted union boards at which a quorum is present.

Dacca.—No. 4809J.—25th June 1931.—In exercise of the power conferred by section 73 of the Bengal Village Self-Government Act, 1919 (Bengal Act V of 1919), the Governor in Council is pleased to appoint the following members of the union boards mentioned below, to be, during their term of office as such members, union courts within the jurisdiction of the union boards of which they are,

respectively, members for the purposes of that section :—

Narayanganj subdivision, district Dacca.

Monohardi police-station.

Ekduaria union board.

Babu Harendra Kishore Sen Gupta.

Babu Manindra Chandra Sen.

Maulvi Muhammad Ismail Hossain Bhuiya.

Maulvi Shujat Ali Bhuiya.

Maulvi Muhammad Dengu Bhuiya.

Barchapa union board.

Babu Amulya Kumar Ray.

Babu Harendra Chandra Saha.

Munshi Jahiruddin.

Munshi Muhammad Abdur Rahman Pandit.

2. This notification will take effect from the date of the first meeting of the reconstituted union boards at which a quorum is present.

Tippera.—No. 4811J.—25th June 1931.—In exercise of the power conferred by section 65 of the Bengal Village Self-Government Act, 1919 (Bengal Act V of 1919), the Governor in Council is pleased to appoint Munshi Aftabuddin Bhuia, a member of the Bhitikandi union board within the Daudkandi police-station in the Sadar (North) subdivision of the Tippera district, to be, during his term of office as such member, a member of the union bench within the jurisdiction of the said union board for the purposes of that section.

Tippera.—No. 4812J.—25th June 1931.—In exercise of the power conferred by section 73 of the Bengal Village Self-Government Act, 1919 (Bengal Act V of 1919), the Governor in Council is pleased to appoint Munshi Aftabuddin Bhuia, a member of the Bhitikandi union board within the Daudkandi police-station in the Sadar (North) subdivision of the Tippera district, to be, during his term of office as such member, a member of the union court within the jurisdiction of the said union board for the purposes of that section.

J. W. NELSON,
Secy. to the Govt. of Bengal.

LOCAL SELF-GOVERNMENT DEPARTMENT.

NOTIFICATIONS.

Minister-in-charge: The Hon'ble Mr. Bijoy Prasad Singh Roy.

Mymensingh. — No. 2380M. — 22nd June 1931.—In exercise of the power conferred by section 351 of the Bengal Municipal Act, 1884 (Bengal Act III of 1884), the Government of Bengal (Ministry of Local Self-Government) are pleased to confirm the by-laws framed by the Commissioners of the Sherpur Municipality in the district of Mymensingh under section 350 of the said Act and published for information with notification No. 207M., dated the 12th January 1931, subject to the modification that the word "sarai" should be substituted for the word "house" in line 5 of by-law No. 82.

2. This cancels notification No. 1404M., dated the 7th April 1931.

Hooghly.—No. 2478M.—26th June 1931.—In exercise of the power conferred by sub-section (*1*) of section 71 of the Calcutta Hackney-carriage Act, 1919 (Bengal Act I of 1919), the Government of Bengal (Ministry of Local Self-Government) are pleased to make the amendment to by-law No. 14 (*1*) of the hackney-carriage by-laws of the Serampore Municipality, in the district of Hooghly, which was published for information with notification No. 1273M., dated the 27th March 1931.

Burdwan.—No. 2382L.S.-G. — 22nd June 1931.—In exercise of the power conferred by section 5 of the Bengal Village Self-Government Act, 1919 (Bengal Act V of 1919), read with section 22 of the General Clauses Act (Bengal Act I of 1899), and after consideration of the views of the Burdwan district board and the Kalna local board, the Government of Bengal (Ministry of Local Self-Government) are pleased to direct that notification No. 3690 L.S.-G., dated the 31st October 1919, so far as it relates to unions at Kalekhantola and Purbasthali in thana Purbasthali in the Kalna subdivision of the Burdwan district, shall be amended as follows:—

For the entries relating to the Kalekhantola and Purbasthali unions in the table appended

to the said notification substitute the following:—

District board—Burdwan.

Local board—Kalna.

Thana—Purbasthali.

Name of union.	Names of mauzas constituting the unions with their numbers in the jurisdiction list.	
Kalekhantola	Banamalipur	... 59
	Dhitpur	... 60
	Doghari	... 61
	Singipara or Shihipara	62
	Bishwarambha	... 63
	Muragacha	... 64
	Rishi	... 65
	Fulia	... 66
	Belgachia	... 68
	Raghabbati	... 69
	Bagachra	... 70
	Lohachur	... 71
	Bargachi	... 72
	Moalia	... 73
	Ranipur	... 74
	Sardanga	... 76
	Baidyapur	... 100
	Sembati	... 101
	Sundarpur	... 102
	Hamdampur or Telinaupara	... 103
	Kumirpara	... 104
	Parulia	... 105
Purbasthali	Palashpuli	... 67
	Chandipur	... 39
	Martala	... 40
	Gopipur	... 41
	Kuturia	... 42
	Simla	... 43
	Sajiara	... 44
	Purbasthali	... 108
	Chupi	... 109

Medical.

Minister-in-charge: The Hon'ble Mr. Bijoy Prasad Singh Roy.

Calcutta.—No. 1925Medl.—24th June 1931.—Major H. E. Murray, M.D., M.CH., I.M.S., officiating Surgeon Superintendent, Presidency General Hospital, Calcutta, carried on the duties of the Superintendent, Mental Observation Ward, Bhowanipore, in addition to his own, from 9th January to 31st March 1931.

Calcutta.—No. 1941Medl.—26th June 1931.—Assistant Surgeon Dr. Rabindra Nath Choudhury, House Physician to the Professor of Medicine, Medical College Hospitals, Calcutta, is, on relief, appointed as House Physician, Outdoor Medical Department, in that institution, *vice* Dr. Arun Kumar Nandi, L.R.C.P. & S. (Edin.), L.R.F.P. & S. (Glas.), M.R.C.P. (Edin.).

2. This cancels notification No. 1667Medl., dated the 21st May 1931.

Calcutta-Midnapore.—No. 1942Medl.—26th June 1931.—Assistant Surgeon Dr. Arun Kumar Nandi, L.R.C.P. & S. (Edin.), L.R.F.P. &S. (Glas.), M.R.C.P. (Edin.), House Physician, Outdoor Medical Department, Medical College Hospitals, is, on relief, posted to the Ghatal subdivision and dispensary in the district of Midnapore, *vice* Dr. Bankim Chandra Banerjee.

No. 1945Medl.—26th June 1931.—Assistant Surgeon Dr. Fazlur Rahman Khan is granted leave on average pay for a further period of one month from 10th July 1931, under rule 81 (*b*) (*ii*) of the Fundamental Rules, in extension of the leave sanctioned in notification No. 1105-Medl., dated the 24th March 1931.

C. W. GURNER,
Secy. to the Govt. of Bengal.

CALCUTTA, THE 26TH JUNE 1931.

RESOLUTION—No. 1958Medl.

Minister-in-charge: The Hon'ble Mr. Bijoy Prasad Singh Roy.

As the term of office of the members of the Visiting Committee for the Campbell Hospital, Calcutta, constituted under Government resolution No. 2502Medl., dated the 22nd August 1930, terminated on the 31st March 1931, the Government of Bengal (Ministry of Local Self-Government—Medical) are pleased

to appoint the following as members of the Visiting Committee for the year 1931-32:—

President.

(1) The Commissioner of the Presidency Division.

Ex-officio Members.

(2) The Magistrate, 24-Parganas.

(3) The Collector of Calcutta.

(4) The Superintendent of the Campbell Hospital.

(5) The Superintending Engineer, Presidency Circle.

Members.

(6) Mrs. F. W. Robertson.

(7) Mrs. J. Dutta.

(8) Mrs. M. R. Mehta.

(9) Mrs. Kumudini Bose.

(10) Mrs. K. C. De.

(11) Mr. J. Stanley Ker, representative of the Bengal Chamber of Commerce.

(12) Mr. H. W. Thomas, representative of the Calcutta Trades Association.

(13) Babu Susil Chandra Ghose, representative of the Commissioners for the Port of Calcutta.

(14) Dr. Rai Suresh Chandra Sarkar Bahadur, representative of the Corporation of Calcutta.

(15) Dr. Haripada Neogi, representative of the Corporation of Calcutta.

(16) Babu Narendra Nath Mitra, representative Hindu gentleman.

(17) Rai Ajit Nath Das Bahadur, representative Hindu gentleman.

(18) Rev. B. A. Nag, representative of the Indian Christian community.

(19) Mr. M. Ashraf Ali Khan Chaudhuri, representative Muhammadan gentleman.

(20) Mr. Golam Hossain Shah, representative Muhammadan gentleman.

(21) Mr. R. H. M. Rustomjee, representative Parsi gentleman.

(22) Mr. I. J. Cohen, representative of the Jewish community.

(23) Dr. H. W. B. Moreno.

(24) Rai Hazarimul Doodwawala Bahadur, representative Marwari gentleman.

By order of the Government of Bengal

(Ministry of Local Self-Government—Medical),

C. W. GURNER,

Secy. to the Govt. of Bengal.

NOTIFICATION.

Minister-in-charge: The Hon'ble Mr. Bijoy Prasad Singh Roy.

No. 271T.Medl.—20th June 1931.—It is hereby notified for general information that the Government of Bengal (Ministry of Local Self-Government) are pleased to make the following modification in the rules for the management, admission and training of students in the Government Medical Schools in Bengal published under this department notification No. 1716Medl., dated the 30th June 1921, as subsequently amended:—

For the existing rule 28 *substitute* the following:—

28. Free studentships are tenable from July to June following in all the classes. Failure in any school test examination shall involve forfeiture of the free studentship during the subsequent session.

C. W. GURNER,

Secy. to the Govt. of Bengal.

EDUCATION DEPARTMENT.

NOTIFICATIONS.

No. 690T.Edn.—22nd June 1931.—In exercise of the powers conferred by section 6, sub-section (*1*), clause (*c*), and section 10 of the Indian Universities Act, 1904 (VIII of 1904), as amended by the Calcutta University Act, 1921 (VII of 1921), His Excellency the Chancellor of the Calcutta University is pleased to re-nominate Sir Jadunath Sarkar, KT., C.I.E., M.A., to be an Ordinary Fellow of the University.

No. 693T.Edn.—22nd June 1931.- In exercise of the powers conferred by section 6, sub-section (*1*), clause (*c*), and section 10 of the Indian Universities Act, 1904 (VIII of 1904), as amended by the Calcutta University Act, 1921 (VII of 1921), His Excellency the Chancellor of the Calcutta University is pleased to re-nominate Dr. Srikumar Banerjee, M.A., B.L., PH.D., to be an Ordinary Fellow of the University.

Minister-in-charge: The Hon'ble Mr. K. Nazim-ud-Din, C.I.E.

Nadia-Calcutta. — No. 701T.Edn. — 23rd June 1931.—Babu Kiran Chandra Mitra, Professor of Chemistry and officiating Vice-Principal, Krishnagar College, is appointed on his own pay in the Bengal Educational Service to be Demonstrator of Chemistry, Presidency College, Calcutta, with effect from the date of the reopening of the Presidency College after the current summer vacation, *vice* Babu Bidhu Bhusan Datta, deceased.

Rajshahi-Calcutta.—No. 702T.Edn.—23rd June 1931.—Babu Haridas Mukharji, Professor of Chemistry, Rajshahi College, is appointed on his own pay in the Bengal Educational Service to act as Demonstrator of Chemistry, Presidency College, Calcutta, with effect from the 17th August 1931, the date on which Babu Kiran Chandra Mitra will proceed on leave preparatory to retirement from the service of Government.

Calcutta.—No. 705T. Edn.—23rd June 1931.—Babu Kiran Chandra Mitra, who has been appointed Demonstrator of Chemistry, Presidency College, Calcutta, is allowed leave for the period from the 17th August to the 15th September 1931 (both days inclusive), viz., leave on average pay for twenty-three days under rules 81 (*b*) (*ii*) and 82 (*b*) of the Fundamental Rules, and leave on half average pay for the remaining period, under rule 81 (*d*) of those rules.

Registration.

NOTIFICATIONS.

Minister-in-charge: The Hon'ble Mr. K. Nazim-ud-Din, C.I.E.

Bakarganj.—No. 698T.Regn.—23rd June 1931.—Babu Jyotish Chandra Singh, Sadar Sub-Registrar of Barisal, in the district of Bakarganj, was allowed leave on average pay for eight days, with effect from the 7th April 1931, under rule 81 (*b*) (*ii*) of the Fundamental Rules.

Nadia.—No. 525Regn.—26th June 1931.—In exercise of the power conferred by section 3 of the Bengal Muhammadan Marriages and Divorces Registration Act, 1876 (Bengal Act I of 1876), the Government of Bengal (Ministry of Education) are pleased to appoint Maulvi Abdur Rahim temporarily to be a Muhammadan Registrar within the police-stations of Ranaghat, Chakdah and Haringhata, in the district of Nadia, during the absence, on leave, of Maulvi Raihanuddin, or until further orders.

Nadia.—No. 526Regn.—26th June 1931.—In exercise of the power conferred by section 2 of the Kazis' Act, 1880 (Act XII of 1880), the Government of Bengal (Ministry of Education) are pleased to appoint Maulvi Abdur Rahim temporarily to be the Kazi for the celebration of marriages and the performance of other rites and ceremonies within the police-stations of Ranaghat, Chakdah and Haringhata, in the district of Nadia, during the absence, on leave, of Maulvi Raihanuddin, or until further orders.

Rangpur.—No. 531Regn.—26th June 1931.—In exercise of the power conferred by section 3 of the Bengal Muhammadan Marriages and Divorces Registration Act, 1876 (Bengal Act I of 1876), the Government of Bengal (Ministry of Education) are pleased to appoint Maulvi Muhammad Abdur Rahman temporarily to be a Muhammadan Registrar within the police-stations of Rangpur (Kotwali) and Gangachara, in the district of Rangpur, during the absence, on leave, of Maulvi Muhammad Abdul Gafur, or until further orders.

Rangpur.—No. 532Regn.—26th June 1931.—In exercise of the power conferred by section 2 of the Kazis' Act, 1880 (Act XII of 1880), the Government of Bengal (Ministry of Education) are pleased to appoint Maulvi Muhammad Abdur Rahman temporarily to be the Kazi for the celebration of marriages and the performance of other rites and ceremonies within the police-stations of Rangpur (Kotwali) and Gangachara, in the district of Rangpur, during the absence, on leave, of Maulvi Muhammad Abdul Gafur, or until further orders.

Hooghly.—No. 539 Regn.—27th June 1931.—In exercise of the power conferred by section 3 of the Bengal Muhammadan Marriages and Divorces Registration Act, 1876 (Bengal Act I of 1876), the Government of Bengal (Ministry of Education) are pleased to appoint Maulvi Haji Shaikh Ashadulla temporarily to be a Muhammadan Registrar of Shia Sect within the police-stations of Chinsura, Polba, Balagarh and Magra, in the district of Hooghly, during the absence, on leave, of Maulvi Saiyid Husain Shirazi, or until further orders.

Hooghly.—No. 540 Regn.—27th June 1931. —In exercise of the power conferred by section 2 of the Kazis' Act, 1880 (Act XII of 1880), the Government of Bengal (Ministry of Education) are pleased to appoint Maulvi Haji Shaikh Ashadulla temporarily to be the Kazi for the celebration of marriages and the performance of other rites and ceremonies of Shia Sect within the police-stations of Chinsura, Polba, Balagarh and Magra, in the district of Hooghly, during the absence, on leave, of Maulvi Saiyid Husain Shirazi, or until further orders.

A. J. DASH,
Secy. to the Govt. of Bengal.

Orders by the Inspector-General of Registration, Bengal.

Bankura. — No. 428. — 16th June 1931.— Babu Nagendra Nath Singh, Sub-Registrar, Kotulpur, in the district of Bankura, is appointed to be Sub-Registrar of Raipur in the same district.

Bankura-Midnapore.—No. 429.—16th June 1931.—Babu Ramaprasad Mukharji, Probationary Sub-Registrar of Bankura, on being relieved of his officiating appointment as Sub-Registrar of Sawrie, in the district of Midnapore, is appointed to act as Sub-Registrar of Kotalpur in the same district.

Bankura.—No. 430.—16th June 1931.— Maulvi Abdul Karim Khilji, Sub-Registrar of Indas, in the district of Bankura, is appointed to be Sub-Registrar of Khatra in the same district.

Bankura.—No. 431. — 16th June 1931.— Maulvi Abu Sayeed, Sub-Registrar attached to Bankura, is appointed to be Sub-Registrar of Indas in the same district.

Bankura-Midnapore.—No. 432.—16th June 1931.—Maulvi Gholam Qasim, Sub-Registrar of Khatra, in the district of Bankura, is appointed to be Sub-Registrar of Kukrahati, in the district of Midnapore.

Bankura-Midnapore.—No. 433.—16th June 1931.—Maulvi Abdul Bari, Sub-Registrar of Raipur, in the district of Bankura, is appointed to be Joint Sub-Registrar of Dantan at Sawri, in the district of Midnapore.

J. N. RAY,
Inspector-General of Regn., Bengal.

Chittagong.—No. 434.—23rd June 1931.— Maulvi Abdul Wadud, Sub-Registrar of Padua, in the district of Chittagong, is allowed leave on average pay for seven days, under rule 81 (*b*) (*ii*) of the Fundamental Rules, with effect from the 1st April 1931.

Khulna.—No. 435.—23rd June 1931.— Maulvi Enayut Rasul, Sub-Registrar, under orders of transfer to Kakdwip, in the district of the 24-Parganas, is allowed leave on average pay for three months and fifteen days, under rule 81 (*b*) (*ii*) of the Fundamental Rules, in extension of the leave granted to him in this department notification No. 418, dated the 19th June 1931.

Mymensingh.—No. 436.—26th June 1931. —Maulvi Muhammad Yusuf, Sub-Registrar of Astogram, in the district of Mymensingh, is allowed leave on average pay for one month, under rule 81 (*b*) (*ii*) of the Fundamental Rules, in extension of the leave granted to him in this department notification No. 232, dated the 20th April 1931.

Tippera.—No. 437.—26th June 1931.— Maulvi A. B. Saiyid Rezai Karim, Sub-Registrar attached to Comilla, Tippera, acted as Sub-Registrar of Bancharampur in the same district from the afternoon of the 2nd April 1931 to the 11th April 1931.

Tippera.—No. 438.—26th June 1931.—Babu Sitanath Das, Sub-Registrar, on being relieved of his appointment as Sub-Registrar of Shamgram, in the district of Tippera, is appointed to act, until further orders, as Sub-Registrar of Bancharampur in the same district, with effect from the afternoon of the 11th April 1931.

Dacca.—No. 439.—26th June 1931.— Maulvi Alauddin Ahmad, Sub-Registrar of Serajdikhan, in the district of Dacca, is allowed leave on average pay for seven days, under rule 81 (*b*) (*ii*) of the Fundamental Rules, with effect from the 1st June 1931.

S. AHMAD,
Inspector-General of Regn., Bengal.

FINANCE DEPARTMENT.

Finance.

ADDENDA AND CORRIGENDA.

No. 2665F.—26th June 1931.—The following corrections, which have been authorised, are published for general information:—

The Fundamental and Subsidiary Rules, 1st Edition (Reprint), 1929.

Page 377—Appendix No. 25.—Under rule 14 *insert* the following as Note 2 numbering the existing one as Note 1 as introduced by Correction Slip No. 48:—

NOTE 2.—Officials and non-officials appointed to represent the Government of India at an International Conference held at places (outside Asia) where they are residing when nominated as representatives, shall be granted, but only for days of attendance at the Conference in question, subsistence allowance at the rate of £1-1-0 a day in lieu of the usual rate of £1-15-0 a night admissible to representatives at such conferences.

Page 372—App. No. 24.—For rule 1 *substitute* the following:—

"1. (1) These rules may be called the 'Passage (Subordinate) Rules, 1925.' They supersede the rules previously in force regarding the grant of passages to personnel engaged in the United Kingdom for service in India who are provided with second class passages on appointment.

(2) Subject to the provisions of sub-rule (3) of this rule they apply—

(*a*) to any person of non-Asiatic domicile who was or is hereafter engaged outside India on contract for a period of not less than three years and to whom a 2nd class passage to India was or may be granted by Government for the purpose of joining his appointment during that contract and throughout his Government service thereafter;

(*b*) to any person of non-Asiatic domicile who was or is hereafter engaged outside India on contract for a period of less than three years to such extent as may be decided by the appointing Government to be appropriate, provided that they shall apply without qualification to any such person who remains in Government service after completing three years' service;

(*c*) to any person of non-Asiatic domicile engaged in India on contract to whom they may be declared by the appointing Government to apply subject to such modification as may be decided by that Government to be appropriate.

(3) If a person to whom these rules apply becomes entitled to passage benefits under the Superior Civil Services Rules, or accepts in their stead passage benefits under any other analogous rules, he shall thereupon cease to be a person to whom these rules apply.

(4) Female employees shall not be entitled to the benefits admissible to the families of male employees."

And the said rules shall have effect, and may be deemed always to have had effect, as though they had been enacted as so amended.

(Government of India, Finance Department, No. F. 7-XV-R-I/29, dated the 9th April 1931.)

Page 373—App. No. 24.—In rule 9 of the said rules, *delete* the words "notwithstanding that his service may be continued beyond the term of his original agreement."

The amendment shall have effect, and may be deemed always to have had effect, as though they had been enacted as so amended.

(Government of India, Finance Department, No. F-7-XV-R-1/29, dated the 9th April 1931.)

Pages 175-76—S. R. 291.—*Insert* the following under the rule:—

Exception.—The authority sanctioning the transfer may, in special circumstances, reduce the period of joining time admissible under this rule.

E. N. BLANDY,
Secy. to the Govt. of Bengal.

COMMERCE DEPARTMENT.

NOTIFICATION.

No. 876T. Com.—20th June 1931.—The following draft of amendments, which, with the previous sanction of the Governor-General in Council, and in exercise of the power conferred by section 9 of the Indian Petroleum Act, 1899 (VIII of 1899), the Governor in Council intends to make in the rules for regulating the importation, possession, and transport of petroleum, published under the Government of Bengal, Marine Department, notification No. 143 Marine, dated the 30th November 1914, and subsequently amended, is published, as required by sub-section (*1*) of section 24 of the said Act, for the information of persons likely to be affected thereby.

2. The draft amendments will be taken into consideration on or after the 15th August 1931, and any objections or suggestions with regard thereto received by the undersigned before that date will be duly considered:—

Draft amendments.

(1) At the end of rule 1 of Chapter II of Part II of the said rules, the following proviso shall be added, namely:—

"Provided that dangerous or non-dangerous petroleum in tank wagons may be transported across the river Hooghly by wagon ferry."

(2) At the end of clause (*b*) of rule 2 of Part III of the said rules, the following shall be added, namely:—

"that is, petroleum which is not certified petroleum or is not petroleum having a flash point above 150°Fahrenheit."

(3) In rule 4 of Part III of the said rules, after the words "at Budge Budge," the following shall be inserted, namely:—

"or to the Jetty Superintendent or to the Dock Superintendent, Calcutta."

(4) In rule 5 of Part III of the said rules, after the word "Budge Budge" the following shall be inserted, namely:—

"or to the Jetty Superintendent or to the Dock Superintendent, Calcutta."

E. N. BLANDY,
Secy. to the Govt. of Bengal.

MARINE DEPARTMENT.

NOTIFICATION.

No. 28Mne.—23rd June 1931.—In exercise of the power conferred by section 19 of the Inland Steam-vessels Act, 1917 (I of 1917), the Governor in Council is pleased to make the following amendment in the rules relating to the survey of inland steam-vessels, published under this department notification No. 50Mne., dated the 22nd November 1930:—

Amendment.

In rule 12 of the said rules, after the table of fees, the following shall be inserted:—

"For vessels over 1,200 tons gross, an additional fee of Rs. 30 is chargeable for every 300 tons or part of 300 tons in excess of that limit."

E. N. BLANDY,
Secy. to the Govt. of Bengal.

PUBLIC WORKS DEPARTMENT.

Establishment.

NOTIFICATIONS.

Minister-in-charge: The Hon'ble Khan Bahadur Maulvi K. G. M. Faroqui.

No. 11T.—18th June 1931.—Babu Srish Chandra Bhattacharji, Assistant Engineer, Jalpaiguri Division, is, in the interests of the public service, transferred to the Rajshahi Division.

No. 12T.—18th June 1931.—Babu Priya Ranjan Datta, Assistant Engineer, Jalpaiguri Division, is appointed as a temporary measure to hold charge of the Bogra subdivision in addition to his own duties as Subdivisional Officer, Rangpur subdivision.

L. R. FAWCUS,

Secy. to the Govt of Bengal (offg.).

DEPARTMENT OF AGRICULTURE AND INDUSTRIES.

Veterinary.

NOTIFICATIONS.

Minister-in-charge: The Hon'ble Khan Bahadur Maulvi K. G. M. Faroqui.

No. 264T.A.I.—19th June 1931.—Rai Sahib Nripendra Nath Mazumdar, Assistant Director, Civil Veterinary Department, Eastern Range, is allowed leave on average pay for the period from 4th to 30th June 1931, both days inclusive, under rule 81 (*b*) (*ii*) of the Fundamental Rules.

No. 265T.A.I.—19th June 1931.—Maulvi Mahammad Sanwar Chowdhury, Veterinary Inspector, is appointed to act as Assistant Director, Civil Veterinary Department, Eastern Range, during the absence, on leave, of Rai Sahib Nripendra Nath Mazumdar, or until further orders.

L. R. FAWCUS,

Secy. to the Govt. of Bengal (offg.).

Orders by the Director of Agriculture, Bengal.

No. 9633.—23rd June 1931.—Babu Gosta Behari Pal, Assistant Agricultural Chemist, Bengal, is granted, under rule 81 (*b*) (*ii*) of the Fundamental Rules, leave on average salary for the period from 19th June 1931 to 12th August 1931, both days inclusive.

R. S. FINLOW,

Director of Agriculture, Bengal.

Orders by the Registrar of Co-operative Societies, Bengal.

No. 7324.—26th June 1931.—In modification of this office notification No. 7814, dated the 13th August 1930, so far as it relates to the appointment of the Special Liquidation Supervisor, Pabna, as liquidator of the Hemrajpur Co-operative Bank (registered No. 122 of 1915), in the district of Pabna, I appoint the Auditor of Co-operative Societies in charge of liquidation work, Pabna, as liquidator of the said society.

No. 7325.—26th June 1931.—In modification of this office notification No. 20-L., dated the 6th August 1928, so far as it relates to the appointment of Babu Jnanendra Narayan Mozumdar, M.Sc., B.L., a Director of the Pabna Central Co-operative Bank, Ltd., as liquidator of the Goalgram Gramya Rindan Samity (registered No. 135 of 1914), in the district of Pabna, I appoint the Auditor of Co-operative Societies in charge of liquidation work, Pabna, as liquidator of the said society.

No. 7326.—26th June 1931.—In modification of this office notification No. 64-L., dated the 27th November 1928, so far as it relates to the appointment of Babu Jnanendra Narayan Mozumdar, M.Sc., B.L., a Director of the Pabna Central Co-operative Bank, Ltd., as liquidator of the Charpakuria Gramya Rindan Samity (registered No. 69 of 1911), in the district of Pabna, I appoint the Auditor of Co-operative Societies in charge of liquidation work, Pabna, as liquidator of the said society.

No. 7327.—26th June 1931.—In modification of this office notification No. 25-L., dated the 6th August 1928, so far as it relates to the appointment of Babu Jogendra Nath Sarkar, B.L., a Director of the Pabna Central Co-operative Bank, Ltd., as liquidator of the Bagchidangi Gramya Rindan Samity (registered No. 175 of 1916), in the district of Pabna, I appoint the Auditor of Co-operative Societies in charge of liquidation work, Pabna, as liquidator of the said society.

No. 7328.—26th June 1931.—In modification of this office notification No. 22-L., dated the 6th August 1928, so far as it relates to the appointment of Babu Jogendra Nath Sarkar, B.L., a Director of Pabna Central Co-operative Bank, Ltd., as liquidator of the Tatipara Gramya Rindan Samity (registered No. 136 of 1916), in the district of Pabna, I appoint the Auditor of Co-operative Societies in charge of liquidation work, Pabna, as liquidator of the said society.

No. 7329.—26th June 1931.—In modification of this office notification No. 21-L., dated the 6th August 1928, so far as it relates to the appointment of Babu Jogendra Nath Sarkar, B.L., a Director of the Pabna Central Co-operative Bank, Ltd., as liquidator of the Kamarhat Gramya Dharma Bhander (registered No. 363 of 1913), in the district of Pabna, I appoint the Auditor of Co-operative Societies in charge of liquidation work, Pabna, as liquidator of the said society.

S. K. GANGULY,

Regr. Co-operative Societies, Bengal.

REVENUE DEPARTMENT.

Land Revenue.

NOTIFICATIONS.

24-Parganas.—No. 708T.R.—24th June 1931.—It is hereby notified that the survey carried out under the orders of Government, under section 3 of the Bengal Survey Act, 1875 (Bengal Act V of 1875), and sub-section (*l*) of section 101 of the Bengal Tenancy Act, 1885 (Act VIII of 1885), and particulars whereof have been embodied in the undermentioned notifications, is adopted as defining villages for the purpose of clause 19 (*b*) of section 3 of the Bengal Tenancy Act, 1885 (Act VIII of 1885), in the police-stations Bijpur, Naihati, Jagatdal, Noapara, Barrackpore, Titagar, Khardaha, Dum Dum, Baranagar, Rajarhat, Barasat, Amdanga, Habra, Taliganj, Behala, Maheshtala, Matiabruz and Bhangore, in the district of 24-Parganas:—

Notification No. 9780L.R., dated the 8th October 1923.
Notification No. 410T.R., dated the 18th September 1924.
Notification No. 5795L.R., dated the 14th April 1927.
Notification No. 7794L.R., dated the 15th September 1924.
Notification No. 5796L.R., dated the 14th April 1927.

24-Parganas.—No. 709T.R.—24th June 1931.—In exercise of the power conferred by sub-clause (*b*) of clause (7) of section 3 of the Land Registration Act, 1876 (Bengal Act VII of 1876), the Governor in Council is pleased to adopt the villages lying in the police-stations of Bijpur, Naihati, Jagatdal, Noapara, Barrackpore, Titagar, Khardaha, Dum Dum, Baranagar, Rajarhat, Barasat, Amdanga, Habra, Taliganj, Behala, Maheshtola, Matiabruz and Bhangore, within the administrative units of the district of 24-Parganas, as surveyed and recorded under the Bengal Tenancy Act, 1885 (Act VIII of 1885), and the Bengal Survey Act (Bengal Act V of 1875), in accordance with the notifications No. 9780L.R., dated the 8th October 1923, No. 410T.R., dated the 18th September 1924, No. 5795L.R., dated the 14th April 1927, No. 7794L.R., dated the 15th September 1924, and No. 5796L.R., dated the 14th April 1927, as defining mauzas for the purpose of that clause in the said police-stations in that district.

Pabna-Faridpur - Dacca - Mymensingh.—No. 7989L.R.—26th June 1931.—Under the provisions of section 3 (*14*) of the Bengal Tenancy Act, 1885 (Act VIII of 1885), the undermentioned Kanungos are authorised to discharge, in the districts of Pabna, Mymensingh, Dacca and Faridpur, the functions of a Revenue Officer under Chapter X of that Act, so far as they relate to surveys and the preparation of record-of-rights:—

Babu Ram Ratan Ghosh.
Maulvi Sadudar Rahman.
Babu Manindra Mohan Sen.
Babu Narayan Chandra Putatunda.

Land Acquisition.

NOTIFICATIONS.

Rajshahi.—No. 7974L.A.—25th June 1931.—The Governor in Council is pleased to cancel the notification No. 9863L.A., dated the 16th August 1930, under section 4 of the Land Acquisition Act, I of 1894, published at page 1308, Part I of the *Calcutta Gazette* of the 21st idem, in respect of the proposed acquisition of 3·30 acres of land required by the Rajshahi Municipality for the Muhammadan burial ground in the village of Sopura, thana Boalia, pargana Garerhat, district Rajshahi.

24-Parganas.—No. 7977L.A.—25th June 1931.—Whereas it appears to the Governor in Council that additional land is likely to be required to be taken by Government at the public expense for a public purpose, viz., for Mair Street diversion in connection with the Calcutta Chord Railway, in the village of Ban Hooghly, jurisdiction list No. 6, thana Baranagar, pargana Calcutta, district 24-Parganas, it is hereby notified that for the above purpose a piece of land measuring, more or less, 0·3306 of an acre, bounded on the—

North—By the Calcutta Chord Railway land acquired under declaration No. 695L.A., dated 15th January 1926,

East—By the lands of Motilal Maitra, Binoylal Banerjee and Ashutosh Mukherji,

South—By the Calcutta Chord Railway land acquired under declaration No. 11431-L.A., dated 30th August 1929,

West—By the Calcutta Chord Railway land acquired under declaration No. 17077L.A., dated 20th September 1928, and declaration No. 695L.A., dated 15th January 1926,

is likely to be required within the aforesaid village of Ban Hooghly.

This notification is made, under the provisions of section 4 of Act I of 1894, to all whom it may concern.

A plan of the land may be inspected in the office of the Engineer in chief, Calcutta Chord Railway, Dakhineswar.

In exercise of the powers conferred by the aforesaid section, the Governor in Council is pleased to authorise the officers for the time being engaged in the undertaking, with their servants and workmen, to enter upon and survey the land and do all other acts required or permitted by that section.

Any person interested in the above land, who has any objection to the acquisition thereof, may, within thirty days after the date on which public notice of the substance of this notification is given in the locality, file an objection in writing before the Collector of the 24-Parganas.

Midnapore.—No. 7980L.A. — 25th June 1931.—The Governor in Council is pleased to cancel the notification No. 9796L.A., dated the 20th July 1929, under section 4 of the Land Acquisition Act, I of 1894, published at page 1493, Part I of the *Calcutta Gazette* of the

25th idem, in respect of the proposed acquisition of 0·99 of an acre of land required for closing breaches in the Ghatal Circuit Embankment in the villages of Argora, Krishnanagar and Shila Rajnagar, pargana Barada, district Midnapore.

Murshidabad.—No. 7983L.A.—25th June 1931.—Babu Abani Kumar Sen, Deputy Magistrate and Deputy Collector, employed temporarily as Subdivisional Officer, Jangipur, in the district of Murshidabad, is vested with the powers of a Collector under the Land Acquisition Act, I of 1894, in that subdivision.

Howrah.—No. 7986L.A.—26th June 1931. —The Governor in Council is pleased to cancel the notification No. 11822L.A., dated the 11th October 1930, under section 4 of the Land Acquisition Act, published at pages 1632-33, Part I of the *Calcutta Gazette* of the 16th idem, in respect of the proposed acquisition of 0·03 of an acre of land required by the Howrah Municipality for widening a portion of Mirpara Lane in the village of Salkia, pargana Paikan, district Howrah.

Bakarganj.—No. 7991L.A. — 26th June 1931.—The Governor in Council is pleased to cancel the notification No. 7865L.A., dated the 27th May 1929, published under section 4 of the Land Acquisition Act (I of 1894) at pages 1032-33, Part I of the *Calcutta Gazette* of the 30th May 1929, in respect of the proposed acquisition of 1·14 acres of land comprising portions of cadastral survey plots Nos. 1146, 1147, 1148 and 1274 required by the district board of Bakarganj for the excavation of a tank at Kalma in the village of Kalma, pargana Ratandi-Kalikapur, zilla Bakarganj.

Burdwan.—No. 8024L.A.—26th June 1931. —The Governor in Council is pleased to cancel the notification No. 7096L.A., dated the 19th March 1928, under section 4 of the Land Acquisition Act, I of 1894, published at page 576, Part I of the *Calcutta Gazette* of the 22nd idem, in respect of the proposed acquisition of 169·19 acres of land in four blocks A, B, C and D required by the Indian Iron and Steel Company, Limited, for the extension of their Hirapur Works in the villages of Narasingband and Hirapur, district Burdwan.

24-Parganas. No. 8033L.A.—26th June 1931.—The Governor in Council is pleased to cancel the notification No. 12669L.A., dated the 1st November 1930, under section 4 of the Land Acquisition Act, I of 1894, published at page 1724, Part I of the *Calcutta Gazette* of the 6th idem, in respect of the proposed acquisition of 0·0331 of an acre of land required for the construction of a night soil depot and public latrine by the side of the Satgachi road in the village of Satgachi, jurisdiction list No. 19, thana Dum Dum, pargana Calcutta, zilla 24-Parganas.

24-Parganas.—No. 8036L.A.—26th June 1931.—In exercise of the powers conferred by section 48 (*1*) of the Land Acquisition Act, I of 1894, the Governor in Council is pleased to withdraw from the acquisition of a piece of land comprising a portion of premises No. 11, Pitambar Ghatak Lane (now No. 9, Paramahangsa Deb Road) measuring, more or less, 5 cottahs 8 chitaks and 11 square feet of standard measurement, equivalent to 0·0911 of an acre, and bounded as follows, which was included in the area notified for acquisition under declaration No. 8382L.A., dated the 11th September 1922, published at page 1771, Part I of the *Calcutta Gazette* of the 13th idem, and required by the Corporation of Calcutta for constructing a 40 feet road connecting Chetla Hat Road and Chetla Central Road, in the village of Chetla, pargana Magura, zilla 24-Parganas:—

Boundaries.

North—By premises No. 8, Pitambar Ghatak Lane (new No. 5, Paramahangsa Deb Road).

East—By premises No. 12, Pitambar Ghatak Lane (new Nos. 7A and 7B, Paramahangsa Deb Road).

South—By premises No. 12/3, Pitambar Ghatak Lane (new No. 11, Paramahangsa Deb Road).

West—By the portion of premises No. 11, Pitambar Ghatak Lane acquired under the above declaration and thrown into the new road called Paramahangsa Deb Road.

Burdwan.—No. 8039L.A.—26th June 1931. —Whereas it appears to the Governor in Council that land is likely to be required to be taken by Government at the public expense for a public purpose, viz., for constructing 2nd mile up to 3,720 ft. of Distributory No. 2, Branch Canal, in connection with the Damodar Canal Project, in the villages of Sur, Bhota, Kutruki and Srirampur, jurisdiction list Nos. 107, 108, 135 and 143, respectively, thanas Ausgram and Galsi, pargana Burdwan, district Burdwan, it is hereby notified that for the above purpose a piece of land measuring, more or less, 2·14 acres, commencing at the end of 1st mile, Distributary No. 2, Branch Canal, at chainage 5,280 feet and proceeding generally towards the south-east through mauzas Sur, Bhota, Kutruki and Srirampur, terminating at chainage 9,000 feet in mauzas Bhota and Srirampur, varying in width from 22 feet to 105 feet and being 3,720 feet in length, is likely to be required within the aforesaid villages of Sur, Bhota, Kutruki and Srirampur.

This notification is made, under the provisions of section 4 of Act I of 1894, to all whom it may concern.

A plan of the land may be inspected in the office of the Special Land Acquisition Officer, Burdwan, as well as in that of the Executive Engineer, Damodar Canal Division, Burdwan.

In exercise of the powers conferred by the aforesaid section, the Governor in Council is pleased to authorise the officers for the time being engaged in the undertaking, with their servants and workmen, to enter upon and survey the land and do all other acts required or permitted by that section.

In exercise of the powers conferred by section 17 (*4*) of the Land Acquisition Act, I of 1894, as amended by Act XXXVIII of 1923, the Governor in Council is pleased to direct that the provisions of section 5A of the Act shall not apply in this case.

Burdwan.—No. 8081L.A.—29th June 1931. —Whereas it appears to the Governor in Council that extra land is likely to be required to be taken by Government at the public expense for a public purpose, viz., for constructing road approaches of head sluice and for depositing surplus earth between chainages 2,800 and 2,888 feet of the Branch Canal in connection with the Damodar Canal Project, in the villages of Golgram and Bansujipur, jurisdiction list Nos. 132 and 137, respectively, thana Galsi, pargana Burdwan, district Burdwan, it is hereby notified that for the above purpose four pieces of land altogether measuring, more or less, 0·43 of an acre, bounded on the—

Block A:

North—By the lands of Akshaya Kumar Shaha and Manohardas Mohanta,

East—By the lands of Manohardas Mohanta and Irrigation Department,

South—By the land of Irrigation Department acquired for main canal,

West—By the lands of Akshaya Kumar Shaha and Irrigation Department,

Block B:

North by the lands of Irrigation Department, Rash Behari Shaha and Shyamapada Dutta,

East—By the lands of Shyamapada Dutta and Girish Chandra Dey,

South and West—By the land of Irrigation Department,

Block C:

North—By the lands of the East Indian Railway and Irrigation Department,

East—By the lands of Hari Bhusan Kesh and Manindra Chandra Bhattacherjee,

South—By the land of Manindra Chandra Bhattacherjee,

West—By the land of the Irrigation Department,

Block D:

North—By the lands of the East Indian Railway and Hari Bhusan Kesh,

East—By the lands of Irrigation Department and East Indian Railway,

South—By the lands of Manindra Chandra Bhattacherjee and Irrigation Department,

West—By the lands of Manindra Chandra Bhattacherjee and Hari Bhusan Kesh,

are likely to be required within the aforesaid villages of Golgram and Bansujipur.

This notification is made, under the provisions of section 4 of Act I of 1894, to all whom it may concern.

A plan of the land may be inspected in the office of the Special Land Acquisition Officer, Burdwan, as well as in that of the Executive Engineer, Damodar Canal Division, Burdwan.

In exercise of the powers conferred by the aforesaid section, the Governor in Council is pleased to authorise the officers for the time being engaged in the undertaking, with their servants and workmen, to enter upon and survey the land and do all other acts required or permitted by that section.

In exercise of the powers conferred by section 17 (*4*) of the Land Acquisition Act, I of 1894, as amended by Act XXXVIII of 1923, the Governor in Council is pleased to direct that the provisions of section 5A of the Act shall not apply in this case.

DECLARATIONS.

Burdwan. — No. 7994L.A. — 26th June 1931.—Whereas it apears to the Governor in Council that land is required to be taken by Government at the public expense for a public purpose, viz., for constructing 10th and 11th mile up to chainage 54,678 feet, Reach No. II, Branch Canal, Damodar Canal Project, in the villages of Diasa, Noada and Wargram, jurisdiction list Nos. 172, 173 and 11, respectively, in thanas, Ausgram and Bhatar, parganas Burdwan and Azmatshahi, district Burdwan, it is hereby declared that for the above purpose a piece of land measuring, more or less, 14·55 acres, commencing at the end of mile 9, Branch Canal at chainage 47,520 feet and proceeding generally towards east up to chainage 47,690 feet and then from chainage 47,750 feet up to chainage 47,985 feet, then again from chainage 48,220 feet up to chainage 49,915 feet and again from chainage 50,410 feet to chainage 52,308 feet of the same direction through mauzas Diasa, Wargram and Noada and again running generally towards south-east and terminating at chainage 54,013 feet in mauza Wargram, varying in width from 5 feet to 404 feet and being 5,703 feet in length, is required within the aforesaid villages of Diasa, Noada and Wargram.

This declaration is made, under the provisions of section 6, Act I of 1894, to all whom it may concern.

A plan of the land may be inspected in the office of the Special Land Acquisition Officer, Burdwan, as well as in that of the Executive Engineer, Damodar Canal Division, Burdwan.

Burdwan.—No. 7997L. A.—26th June 1931.—Whereas it appears to the Governor in Council that land is required to be taken by Government at the public expense for a public purpose, viz., for constructing 1st mile of the Distributary No. 2, Branch Canal in connection with the Damodar Canal Project, in the villages of Dignagar and Sur, jurisdiction list Nos. 110 and 107, in thana Ausgram, pargana Burdwan, district Burdwan, it is hereby declared that for the above purpose a piece of land measuring, more or less, 2·61 acres, commencing at a distance of 55 feet from chainage 0 feet, which is the central point of the Branch Canal, at chainage 28,865 feet in the 6th mile, proceeding generally towards south-east through mauzas Dignagar and Sur

up to chainage 3,970 feet and then again from chainage 4,000 feet generally towards the same direction and terminating at chainage 5,280 feet in mauza Sur, varying in width from 10 to 30 feet and being 5,195 feet in length, is required within the aforesaid villages of Dignagar and Sur.

This declaration is made, under the provisions of section 6, Act I of 1894, to all whom it may concern.

A plan of the land may be inspected in the office of the Special Land Acquisition Officer, Burdwan, as well as in that of the Executive Engineer, Damodar Canal Division, Burdwan.

Burdwan.—No. 8000L. A.—26th June 1931.—Whereas it appears to the Governor in Council that additional land is required to be taken by Government at the public expense for a public purpose, viz., for constructing the 6th mile from chainage 31,600 feet, 7th, 8th and 9th mile of Reach No. 2, Branch Canal in connection with the Damodar Canal Project, in the villages of Dignagar, Aligram and Diasa, jurisdiction list Nos. 110 111 and 172, in thana Ausgram, pargana Burdwan, district Burdwan, it is hereby declared that for the above purpose six pieces of lands altogether measuring, more or less, 45·18 acres—

Block A:

Starting from chainage 31,600 feet of the 6th mile, Reach No. 1 of the Branch Canal in mauza Dignagar, proceeding generally towards the north-east on the western side of the old alignment of the Branch Canal, terminating at chainage 32,721 feet and varying in width from 1 inch to 5 feet and being 1,121 feet in length,

Block B:

Starting from chainage 31,600 feet of the 6th mile, Reach 1 of the Branch Canal in mauza Dignagar, proceeding generally towards the north-east on the eastern side of the old alignment of the Branch Canal, terminating at chainage 32,721 feet and varying in width from 1 inch to 5 feet and being 1,121 feet in length,

Block C:

Commencing from chainage 33,050 feet, running generally towards the east through mauza Dignagar on the north side of the old alignment of the Branch Canal up to chainage 33,739 feet, then commencing from chainage 33,819 feet and proceeding up to chainage 34,032 feet and again commencing from chainage 34,208 feet and proceeding towards the same direction and terminating at chainage 42,958 feet, varying in width from 2½ feet to 289 feet and being 9,652 feet in length,

Block D:

Commencing from chainage 33,050 and proceeding generally towards the east through mauza Dignagar on the southern side of the old alignment of the Branch Canal up to chainage 41,637 feet and again starting from chainage 41,687 feet and running towards the same direction and terminating at chainage 42,958 feet in mauza Aligram, varying in width from 2½ feet to 289 feet and being 9,858 feet in length,

Block E:

Commencing from chainage 43,018 feet and proceeding generally towards the east through mauza Aligram on the southern side of the old alignment of the Branch Canal and terminating at chainage 43,300 feet, varying in width from 1 foot to 289 feet and being 282 feet in length,

Block F:

Commencing from chainage 43,018 feet and proceeding generally towards the north-east through mauzas Aligram and Diasa up to chainage 46,675 feet and then commencing from chainage 46,930 feet and running towards the east and terminating at chainage 47,520 feet (mile 9) in mauza Diasa, varying in width from 80 feet to 289 feet and being 4,247 feet in length,

are required within the aforesaid villages of Dignagar, Aligram and Diasa.

This declaration is made, under the provisions of section 6, Act I of 1894, to all whom it may concern.

A plan of the land may be inspected in the office of the Special Land Acquisition Officer, Burdwan, as well as in that of the Executive Engineer, Damodar Canal Division, Burdwan.

Howrah.—No. 8027L.A.—26th June 1931.—Whereas it appears to the Governor in Council that land is required to be taken by Government at the expense of the Howrah district board for a public purpose, viz., for the proposed dispensary at Bargachia, in the village of Bargachia, pargana Balia, zilla Howrah, it is hereby declared that for the above purpose a piece of land measuring, more or less, 0·424 of an acre, bounded on the—

North—By the private land,
East—By the land of Jobed Ali,
South—By the burrow-pit, Howrah-Jagatballavpur Road and land of Mafijuddin,
West—By the pathway,

is required within the aforesaid village of Bargachia.

This declaration is made, under the provisions of section 6, Act I of 1894, to all whom it may concern.

A plan of the land may be inspected in the office of the Collector of Howrah.

Chittagong.—No. 8030L.A.—26th June 1931.—Whereas it appears to the Governor in Council that land is required to be taken by Government at the public expense for a public purpose, viz., for the construction of Kheda Camp Inspection Bungalow in the village of Purba Khurusia, thana Rangunia, district Chittagong, it is hereby declared that for the above purpose a piece of land measuring, more or less, 1·14 acres, covering the revenue survey plots Nos. 2360 and 2362, is required within the aforesaid village of Purba Khurusia.

This declaration is made, under the provisions of section 6, Act I of 1894, to all whom it may concern.

A plan of the land may be inspected in the office of the Collector of Chittagong.

Forests.

NOTIFICATION.

No. 703T.R.—24th June 1931.—Mr. E. O. Shebbeare, Conservator of Forests, Northern Circle, Bengal, is allowed leave on average pay for one month, under rule 81 (*b*) (*i*) of the Fundamental Rules, with effect from the 22nd June 1931.

H. C. V. PHILPOT,
Secy. to the Govt. of Bengal.

BOARD OF REVENUE, BENGAL.

NOTIFICATION.

Nadia.—No. 6178C.P.—22nd June 1931.—In exercise of the powers conferred by clause 2 of section 8 of the Bengal Land Revenue (Assistant Collectors) Regulation, 1821 (IV of 1821), the Board of Revenue authorises Babu Ashutosh Banerjee, Sub-Deputy Collector, who has been placed on duty in connection with the maintenance, for the purpose of section 158A of the Bengal Tenancy Act, 1885, of the record-of-rights of the Bequest Estate of the Birnagar Municipality in the district of Nadia, to exercise and perform within the local limits of the said estate any of the powers and duties vested in the Collectors of Land Revenue under any enactment in force therein for the purpose of the work of maintenance of the record-of-rights.

D. MACPHERSON,
Secy. to the Board of Revenue, Bengal.

SMALL CAUSE COURT NOTICE.

The 24th June 1931.

Notice is hereby given, under Act IX of 1887, that the Judge of Small Cause Court, Dacca and Munshigunge, will, in the month of July 1931, sit in the courts on the undermentioned dates:—

In Munshigunge Small Cause Court—From 13th to 18th July 1931.

In Dacca Small Cause Court—The rest of the working days of the month.

S. SIL,
Small Cause Court Judge.

ORDERS BY COMMISSIONERS OF DIVISIONS.

Burdwan Division—Chinsura.

No. 845M.—22nd June 1931.—It is hereby notified for general information that the next general election of Commissioners of the Dainhat Municipality in the district of Burdwan will be held on Wednesday, the 23rd December 1931.

Erratum.—No. 1224L.S.-G.—22nd June 1931.—In this office notification No. 991-L.S.-G., dated the 22nd May 1931, published at page 676 of Part 1 of the *Calcutta Gazette* of the 11th June 1931, regarding the constitution of the Goalbari union board in police-station Raipur in the Sadar subdivision of the Bankura district, *for* "Babu Birsingh Memram" *read* "Babu Birsingh Hemram."

Erratum.—No. 1227L.S.-G. — 22nd June 1931.—In line 8 of notification No. 979-L.S.-G., dated the 22nd May 1931, issued from this office and published at page 671 of Part I of the *Calcutta Gazette* of the 11th June 1931, regarding constitution of union board in the Sadar subdivision of the Bankura district, *for* "Taldanga" *read* "Taldangra."

No. 889M.—24th June 1931.—It is hereby notified for general information that, under rule 20 (b) of the rules for the management of charitable hospitals and dispensaries in Bengal, the following gentlemen have been appointed to be members of the committee for the management of the Raj Kissen Charitable Dispensary at Bhadreswar in the district of Hooghly:—

The Subdivisional Officer, Serampore (*ex officio*).
The Civil Surgeon, Hooghly (*ex officio*).
The Chairman, Bhadreswar Municipality (*ex officio*).
Babu Satyendra Nath Banerji.
Babu Hrishikesh Banarji.
Babu Shideswar Chandra Banarji.
Babu Shideswar Banarji.
Babu Chuni Lal Khan.
Babu Panchanon Paul.
Babu Sasadindu Shekhor Banarji.

L. B. BURROWS, *Commissioner (offg.).*

Howrah, the 19th June 1931.

1. Under rule 10 of the election rules, Munshi Mohinel Huq Mondol has been duly elected to be a member of Kolora union board in police-station Domjur in the Sadar subdivision of this district, in place of Munshi Atwar Rahaman Naskar, deceased.

2. Under sub-section (2) of section 6 of the Bengal Village Self-Government Act, 1919 (Bengal Act V of 1919), Babu Manmatha Nath Basu has been duly elected to be a member of the Govindapur union board in police-station Panchla in the Sadar subdivision of this district, in place of Babu Atul Krishna Basu, deceased.

3. Under sub-section (3) of section 6 of the Bengal Village Self-Government Act, 1919 (Bengal Act V of 1919), Munshi Abdul Hamid has been appointed a member of Sekrahati union board in police-station Jagatballavpur in the Sadar subdivision of this district, in place of Maulvi Sk. Sayedur Rahaman, deceased.

4. Under sub-section (3) of section 6 of the Bengal Village Self-Government Act, 1919 (Bengal Act V of 1919), Babu Haridhon Ghosh has been appointed a member of the Bally union board in police-station Bally of the Sadar subdivision of this district, in place of Babu Annada Prosad Ghosh, deceased.

5. Under sub-section (*3*) of section 6 of the Bengal Village Self-Government Act, 1919 (Bengal Act V of 1919), Babu Ananta Ram Ghosh has been appointed a member of the Narna union board in police-station Domjur in the Sadar subdivision of this district, in place of Dr. Amulya Prosad Chatterjee, resigned.

[ILLEGIBLE], for *District Magistrate, Howrah.*

Chittagong Division—Chittagong.

No. 2355G.—23rd June 1931.—It is hereby notified for general information that, under rule 20 (*b*) of the rules for the management of hospitals and dispensaries in Bengal, Maulvi Abdul Wahed, Khas Tahsildar, Cox's Bazar, is appointed to be a member of the managing committee of the Cox's Bazar charitable dispensary and hospital in the district of Chittagong, *vice* Babu Kunja Behari Gupta, transferred.

W. H. NELSON, *Commissioner.*

Dacca Division—Dacca.

No. 3299J.—22nd June 1931.—It is hereby notified for general information that—

(*a*) Under sub-section (*2*) of section 6 of the Bengal Village Self-Government Act, 1919 (Bengal Act V of 1919), the following gentlemen have been duly elected to be members of the Karimpur union board in police-station Narsingdi in the Narayanganj subdivision of the Dacca district:—

Munshi Abdul Ohab Master.
Maulvi Muhammad Sekandarali.
Munshi Kitab Ali Farazi.
Munshi Iyakub Ali Sarkar.
Munshi Fazlul Karim Bhuiya.
Munshi Wahed Ali.

(*b*) Under sub-section (*3*) of section 6 of the Act, the following gentlemen have been appointed by the District Magistrate of Dacca to be members of the said union board:—

Babu Rajani Kanta Sutradhar.
Maulvi A. H. Ali Asgor.
Munshi Kalimuddin Master.

No. 3302J.—22nd June 1931.—It is hereby notified for general information that under rule 63 (*2*), Chapter IV of the Bengal Jail Code, 1919, the following gentlemen are appointed to be non-official visitors of the Madaripur Subsidiary Jail in the district of Faridpur for a period of two years with effect from the date of this notification:—

Babu Man Mohan Saha.
Maulvi Daliluddin Ahmed (No. I).

No. 2878J.—25th June 1931.—It is hereby notified for general information that—

(*a*) Under sub-section (*2*) of section 6 of the Bengal Village Self-Government Act, 1919 (Bengal Act V of 1919), the following gentlemen have been duly elected to be members of the Ekduaria union board in police-station Monohardi in the Narayanganj subdivision of the Dacca district:—

Munshi Abdul Aziz.
Munshi Kamaraddin Bhuiya.
Maulvi Shujat Ali Bhuiya.
Maulvi Muhammad Dengu Bhuiya.
Babu Govinda Chandra Sen.
Maulvi Muhammad Ismail Hossain Bhuiya.

(*b*) Under sub-section (*3*) of section 6 of the Act, the following gentlemen have been appointed by the District Magistrate of Dacca to be members of the said union board:—

Babu Harendra Kishore Sen Gupta.
Babu Manindra Chandra Sen.
Maulvi Ohad Ali.

No. 2879J.—25th June 1931.—It is hereby notified for general information that—

(*a*) Under sub-section (*2*) of section 6 of the Bengal Village Self-Government Act, 1919 (Bengal Act V of 1919), the following gentlemen have been duly elected to be members of the Barchapa union board in police-station Monohardi in the Narayanganj subdivision of the Dacca district:—

Maulvi Shah Mahmud Abdul Soban.
Maulvi Abdul Barek.
Munshi Muhammad Abdul Gaffar.
Munshi Muhammad Safiruddin Pandit.
Munshi Ramjan Ali Pandit.
Babu Harendra Chandra Saha.

(*b*) Under sub-section (*3*) of section 6 of the Act, the following gentlemen have been appointed by the District Magistrate of Dacca to be members of the said union board:—

Babu Amulya Kumar Roy.
Munshi Jahiruddin.
Munshi Mahmed Abdur Rahman Pandit.

No. 3376J.—26th June 1931.—It is hereby notified for general information that, under section 19 (*1*) of the Bengal Local Self-Government Act, III of 1885, Babu Surja Prasanna Bajpai Choudhury has been duly elected by the Perojpur local board to be a member of the Bakarganj district board, in place of Munshi Muhammad Rajjabali, deceased.

A. CASSELLS, *Commissioner (offg.).*

Dacca, the 25th June 1931.

No. 4762M.—It is hereby notified for general information that—

(*a*) Under sub-section (*2*) of section 6 of the Bengal Village Self-Government Act, 1919 (Bengal Act V of 1919), the following gentlemen have been duly elected to be members of the Hazipur union board in police-station Shibpur in the Narayanganj subdivision of the Dacca district:—

Munshi Pearali Bhuiya.
Munshi Dewan Ali.
Maulvi Amiruddin Ahamed.
Munshi Ramijuddin Sarker.
Babu Baikunta Chandra Saha.
Munshi Jonab Ali Bhuiya.

(*b*) Under sub-section (*3*) of section 6 of the Act, the following gentlemen have been appointed by the District Magistrate of Dacca to be members of the said union board:—

Babu Mahesh Chandra Saha.
Mr. S. J Lazarus.
Munshi Abdul Hasim Bhuiya.

R. M. CHAKRAVARTI, for *District Magistrate.*

Presidency Division—Calcutta.

No. 1662L.S.-G.—19th June 1931.—It is hereby notified for general information that, under section 13 of the Bengal Village Self-Government Act, 1919 (Bengal Act V of 1919), read with rule 36 of the rules for the election and appointment of members of union boards under the said Act, Munshi Torabali Molla has been appointed by the District Magistrate of Khulna to be a member of the Ramchandrapur union board in police-station Morrelganj in the Bagerhat subdivision of the Khulna district, in place of Munshi Arshedali Molla, deceased.

No. 1668L.S.-G.—19th June 1931.—It is hereby notified for general information that at the general elections held the following gentlemen have been elected, under section 9 of the Bengal Local Self-Government Act, III (B C.) of 1885, as amended, to be members of the several local boards in the district of Murshidabad representing the thanas noted above each:—

Sadar local board.

Thana Berhampore Town.

Babu Kulada Prosad Roy.
Munshi Nakibuddin Mandal.

Thana Hariharpara.

Babu Nripendra Narayan Bose Sarbadhikary.

Thana Nowada.

Babu Bholanath Banerjee.
Munshi Khosbar Hossain Biswas.

Thana Domkal.

Mr. A. Somerville.
Munshi Kafiluddin Ahamed

Thana Jallanghi.

Munshi Golapuddin Sarkar.
Munshi Golam Panjatan Ahmed.

Thana Beldanga.

Babu Hare Krishna Khan Mistry.
Munshi Mohammed Abul Kasem.
Haji Muhammed Ayub.
Babu Anil Kumar Chatterji.

Lalbagh local board.

Thanas Murshidabad and Jiaguni.

Babu Ashutosh Majumdar.
Shaikh Pulin Mondal.

Thana Nabagram.

Babu Bidhu Bhusan Bagchi.
Babu Sailendra Kumar Dutta.

Thana Bhagwangola.

Kazi Faizuddin.
Munshi Rahamatulla Sarcar.

Thana Lalgola.

Babu Kulada Charan Banerji.
Munshi Nazidulla Biswas.

Thana Raninagore.

Babu Prabar Krishna Majumdar.
Munshi Faizuddin Ahamed.

Jangipur local board.

Thana Sagardighi.

Tamizuddin Mondal.
Muhammad Yad Hossain.
Muhammad Abdul Hye.

Thana Raghunathgunj.

Muhammad Unus.
Dr Afsar Hossain.
Babu Binayak Sen.

Thana Suti.

Babu Jnanendra Narayan Chowdhury.
Babu Jadunandan Das.

Thana Shamshergunj.

Muhammad Bogdad Biswas.
Babu Probhat Kumar Chowdhury.

Kandi local board.

Thana Barwan.

Babu Subodh Krishna Ghosh Maulick.
Babu Bimalapada Ghosh Hazra.
Quazi Abdul Barkat.

Thana Bharatpur.

Maulvi Golam Ghous.
Maulvi Khondkar Muhammad Abu Ahsan.
Babu Dwijapada Banerjee, B.L.

Thana Kandi.

Babu Sarat Chandra Trivedi.
Babu Bhutesh Chandra Trivedi.

Thana Khargram.

Mohammed Abul Kasem.
Babu Kartic Chandra Roy Choudhury.

No. 1669L.S.-G.—19th June 1931.—It is hereby notified for general information that in exercise of the powers conferred on me by section 4 (*2*) of the Bengal Local Self-Government (Amendment) Act, V of 1908, I appoint, under section 11 of the Bengal Local Self-Government Act, III (B C.) of 1885, the following gentlemen to be members of the

several local boards in the district of Murshidabad:—

Sadar local board.

Senior Circle Officer, Sadar (*ex-officio*).
Babu Sourendra Nath Mukherji, B.A.
Babu Bisweswar Roy.
Maulvi Shaik Abdur Rashid.
Haji Haroon Rashid.
Khan Bahadur Ekramul Huq, B.L.

Jangipur local board.

Babu Sasi Bhusan Ray.
Babu Kirit Bhusan Das.
Munshi Mir Ismail Ali.
Munshi Muhammad Sokhawat Hossain.
Syed Abul Fazle.

Kandi local board.

Babu Bhimapada Ghose, M.A.
Babu Bhupendra Nath Mukherji.
Babu Bijoyendu Narayan Ray.
Khan Bahadur Haji Khondkar Fazlul Huq, B.A., M.R.A.S.
Maulvi Muhammad Ali Newaj.

Lalbagh local board.

Babu Rajendra Nath Das.
Rai Surendra Narayan Sinha Bahadur.
Babu Nibaran Chandra Das, L.M.S.
Maulvi Fazle Rabee.
Maulvi Fazle Haque.

No. 1672L.S.G.—19th June 1931.—It is hereby notified for general information that, under rule 20 (*b*) of the dispensary rules, the following gentlemen have been appointed by the Krishnagar Municipality to be members of the committee for the management of the charitable dispensary at Krishnagar in the Nadia district:—

The District Magistrate, Nadia (*ex-officio*).
The Civil Surgeon, Nadia (*ex-officio*).
The Sadar Subdivisional Officer, Nadia (*ex-officio*).
The Vice-Chairman, District Board, Nadia (*ex-officio*).
The District Engineer, Nadia (*ex-officio*).
The Chairman, Krishnagar Municipality (*ex-officio*).
Babu Sudhindra Chandra Maulik, B.L.
Rai Sahib Sudhendu Mohon Banerji.
Babu Indu Bhusan Bhaduri, B.L.
Babu Hem Chandra Dutt Gupta, M.A., B.L., F.C.S. (Lond.).
Babu Nihar Ranjan Sinha.
Babu Amiya Nath Ganguli.

No. 437J.G.—20th June 1931.—It is hereby notified for general information that in exercise of the powers conferred on me by rule 63 (2) of the Bengal Jail Code, 1919, as revised, I appoint Mr. J. B. Ross of Messrs. Shaw Wallace and Company to be a non-official visitor of the Alipore Central Jail in the district of the 24-Parganas for a period of two years with effect from the date of this notification, in place of Mr. J. Macfarlane, whose appointment is cancelled.

No. 1051R.G.—20th June 1931.—Maulvi Nuruddin Ahmad, No. 1, Sub-Deputy Collector, Sadar, Khulna, is granted leave on average pay for five days, under rule 81 (*b*) (*ii*) of the Fundamental Rules, with effect from the 30th April 1931.

No. 1692L.S.G.—22nd June 1931.—It is hereby notified for general information that, under section 13 of the Bengal Village Self-Government Act, 1919 (Bengal Act V of 1919), read with rule 36 of the rules for the election and appointment of members of union boards under the said Act, Babu Nil Kanta Roy has been appointed by the District Magistrate of Jessore as a member of the Bagan-chra union board in police-station Sarsha in the Bongaon subdivision of the Jessore district, in place of Babu Ratneswar Pandey, deceased.

F. W. ROBERTSON, *Commissioner* (*offg.*).

Krishnagar, the 27th June 1931.

It is hereby notified for general information that, under section 13 of the Bengal Village Self-Government Act, 1919 (Bengal Act V of 1919), read with rule 36 of the rules for the election and appointment of members, etc., of union boards under the said Act, Munshi Jubbar Ali Biswas has been appointed by the District Magistrate of Nadia to be a member of Ward No. II of Murutia union board in police-station Karimpore in the Meherpur subdivision of the Nadia district, in place of Munshi Sanatan Biswas, deceased.

T. C. ROY, *District Magistrate, Nadia.*

Rajshahi Division—Jalpaiguri.

No. 2324J.—22nd June 1931.—Babu Charu Chandra Bhattacharjee, Sub-Deputy Collector, Rangpur, is allowed leave on average pay for eleven days, with effect from the 27th May 1931 to 6th June 1931, under rule 81 (*b*) (*ii*) of the Fundamental Rules.

Erratum.—No. 2292M.—23rd June 1931.—In line 24, paragraph II of this office notification No. 1891 M., dated the 27th May 1931, published at pages 680-81 of Part I of the *Calcutta Gazette*, dated the 11th June 1931, *for* "Maulvi Abdul Rouf Shah Choudhury" *read* "Maulvi Abdur Rouff Shah Choudhury."

No. 2320M.—25th June 1931.—In exercise of the powers conferred on me by section 10 read with the proviso to section 18 (*1*) of the Local Self-Government Act (III of 1885), as amended by Act V (B.C.) of 1908, and acting under the orders of the Local Government given in the exercise of the administrative control vested in them by section 29B of the said Act, I appoint Babu Srish Chandra Sen to be a member of the Pabna local board in the district of Pabna, *vice* Babu Lalit Mohan Saha deceased.

J. G. DRUMMOND, *Commissioner* (*offg.*).

Dinajpur, the 22nd June 1931.

No. 3717J. — Under rule 32 of the election rules under the Local Self-Government Act, it is notified for general information that a fresh election for a member of the Sadar local board in the district of Dinajpur in respect of Kaliaganj thana will be held on the 25th July 1931 at the Kaliaganj thana premises.

The 24th June 1931.

No. 3783J.M.—It is notified for general information that, under section 13 of the Bengal Village Self-Government Act, 1919 (Bengal Act V of 1919), Maulvi Mosle-uddin Sorker of Belbari has been appointed by the District Magistrate of Dinajpur to be a member of the Belbari union board No. 2 in the police-station Gangarampur in the Balurghat subdivision of the district of Dinajpur, *vice* Maulvi Ataruddin Sorker of Belbari, deceased.

L. C. GUHA, *District Magistrate.*

Rangpur, the 23rd June 1931.

No. 3629J.—It is hereby notified for general information that, under section 13 of the Bengal Village Self-Government Act, 1919 (Act V of 1919), Maulvi Boyez Uddin Ahmed, Muktear, has been duly elected to be a member of Gopalpur union board in police-station Badarganj of Sadar subdivision of this district, *vice* Babu Madan Das Pramanik, deceased.

No. 3631J.—It is hereby notified for general information that a by-election having failed, Maulvi Rais Uddin Ahmed, B.L., has been appointed under section 13 of the Bengal Village Self-Government Act, 1919 (Act V of 1919), to be a member of Darsana union board in police-station Kotwali of Sadar subdivision of this district, *vice* Babu Satyendra Nath Chanda, deceased.

[ILLEGIBLE], for *District Magistrate.*

The Calcutta Gazette

THURSDAY, JULY 2, 1931.

Part I A

Orders and Notifications by the Government of India republished for general information.

LEGISLATIVE DEPARTMENT.

NOTIFICATION.

Simla, the 18th June, 1931.

No. F -290/31-C. & G.—In exercise of the powers conferred by rule 15 of the Legislative Assembly Electoral Rules, the Governor General in Council is pleased to direct that the following further amendments shall be made in the Legislative Assembly (Bengal) Electoral Regulations published with the notification of the Government of India in the Legislative Department No. 485, dated the 17th August, 1923, namely:—

In sub-regulation (2) of regulation 39 for the word and figures "Form XI" the word and figures "Form XIII" shall be substituted and Form XI published with the Notification in the Legislative Department No. 127-I/29-C. & G., dated the 24th November, 1929, shall be re-numbered as Form XIII.

L. Graham,
Secy. to the Govt. of India.

HOME DEPARTMENT.

NOTIFICATIONS

Establishments

Simla, the 15th June 1931.

No. F.-164/31.—Mr. S N. Roy of the Indian Civil Service is appointed to officiate as Joint Secretary to the Government of India in the Home Department, with effect from the forenoon of the 12th June 1931.

No. F.-164/31/1.—Mr. D Gladding of the Indian Civil Service is appointed to officiate as Deputy Secretary to the Government of India in the Home Department, with effect from the forenoon of the 12th June 1931.

Police.

Simla, the 16th June 1931.

No. F.-5/IV/31.—The services of Captain J N. Mackay, 2nd Battalion, The Bombay Pioneers, are placed at the disposal of the Government of Burma for employment with the Burma Military Police, with effect from the date he assumed charge of his duties.

H. W. Emerson,
Secy. to the Govt. of India.

Judicial.

The 18th June 1931.

No. F. 15/31.—In supersession of the Home Department Notification No. F. 15/31-Judicial, dated the 14th March 1931, the Honourable Mr. Justice H. R. Panckridge, Barrister-at-Law, a Judge of the High Court of Judicature at Fort William in Bengal, is granted leave on full allowance for 1 month and 26 days with effect from the 1st May 1931 and in continuation leave on half allowance up to the 10th September 1931 inclusive.

S. N. Roy,
Joint Secy. to the Govt. of India (offg.).

CORRIGENDUM.

POLICE.

The 16th June 1931.

No. F.-25/VII/30.—In the Home Department Notification No. F.-25/VII/30-Police, dated the 1st January 1931, published in the Gazette of India Extraordinary, dated the 1st January 1931, under B. & O. an asterisk should be inserted against No. 43—Sub-Inspector Brij Behari Lal.

A. WHITTAKER,
Under Secy. to the Govt. of India.

ARMY DEPARTMENT.

Simla, the 20th June 1931.

Part B.

No. 380.—The following appointments are made:—

* * * *

AUXILIARY FORCE, INDIA.

* * * *

The Bengal Artillery

To be 2nd Lts.

George Leonard Shield Pattullo. Dated 15th Mar. 1931.

William Herbert Walton Urquhart. Dated 19th Mar. 1931.

Charles Barrie Singer. Dated 20th Mar. 1931.

Robert Wynd. Dated 21st Mar. 1931.

The undermentioned officers designate of the Army in India Reserve of Officers are granted temporary commissions for the periods noted against their names:—

Calcutta Light Horse.

To be Capt.

Frank Robert Hutton. From 16th to 31st Mar. 1931.

To be Lt.

Henry Bolton Cohen. From 9th to 24th Mar. 1931.

* * * *

No. 386.—The following relinquishment is permitted:—

AUXILIARY FORCE, INDIA.

The Revd. J. C. P. Stirling, M.A., B.D., Hony. Chapln. to the Bengal Artillery. Dated 8th May 1931.

No. 387.—The undermentioned officer resigns his commission:—

AUXILIARY FORCE, INDIA.

The Calcutta and Presidency Bn.

Lt. J. E. Locke. Dated 20th May 1931.

G. M. YOUNG,
Secy. to the Govt. of India.

RAILWAY DEPARTMENT.

(Railway Board.)

NOTIFICATION.

Simla, the 9th June 1931.

No. 7605-F.—In pursuance of sub-section (*1*) of section 135 of the Indian Railways Act, 1890 (IX of 1890), the Governor General in Council is pleased to declare that the administration of the Assam-Bengal Railway shall be liable to pay in aid of the funds of the local authorities set out in the first column of the schedule annexed hereto the tax specified in the second column thereof.

Schedule.

Mymensingh district.

Local Authority.	Tax.
Barhatta union board	Union rate.
Mohanganj union board	Union rate.

J. F. BLACKWOOD,
Secy., Railway Board.

The Calcutta Gazette

THURSDAY, JULY 2, 1931.

Part I B

Educational Notices.

University of Dacca.

Ramna, Dacca, the 22nd April 1931.

Admission for the session 1931-32 in the Faculties of Arts (including Commerce), Science and Law will commence on 1st July 1931. Students of this University and all recognised Universities and Intermediate Boards will be admitted till the 21st July 1931. Students of the Calcutta University will be admitted till the 21st July or the 21st day after the publication of their results in *Calcutta Gazette*, whichever is later. After these dates admissions will be made during a further period of fifteen days with a delay fine at Re. 1 per diem. Class fees for undergraduate students (other than those reading for Honours in Physics or Chemistry) and Law students Rs. 8 per mensem; for undergraduate students reading for Honours in Physics or Chemistry, for M.A students and for M.Sc. students in Mathematics Rs. 10 per mensem; for M.Sc. students in Physics and Chemistry Rs. 12 per mensem. Seat rent in halls from Rs. 2 to Rs. 4 and total minimum cost of tuition and living from Rs. 22 to Rs. 25 a month. The University has up-to-date laboratories (including an Experimental Psychology Laboratory), an excellent library, and an organised tutorial system. It possesses splendid residential facilities and strong students' unions, and offers exceptional opportunities for athletics.

(2) The residence for women students is very close to the University buildings and is adequately furnished. Intending candidates for admission to the residence are advised to apply as early as possible.

(3) A pamphlet of general information relating to the staff, courses, scholarships, stipends and other matters will be sent post-free on application to the Registrar.

N. Ahmad, *Registrar.*

Government Commercial Institute.

11, Hastings Street, Calcutta, the 15th May 1931.

Regular Day Classes—10-30 a.m. to 3-30 p.m. (Two Years' Course).

Subjects taught—(*a*) Modern English (including methods and machinery of business); (*b*) Commercial Geography; (*c*) Commercial and Mental Arithmetic; (*d*) Book-keeping; (*e*) Commercial Bengali.

Optionals—Shorthand and Typewriting.

Six scholarships available: three of Rs. 12 per month in the First Year and three of Rs. 20 per month in the Second Year Day classes.

The Matriculates of the Calcutta University on their passing the Institute's Final Day Course Examination are allowed to join the B.A. and B. Com. classes by the University.

(A) For the Institute of Banker's Examination—

(*a*) Modern English; (*b*) Economics and Economic Geography; (*c*) Banking and Foreign Exchange.

(B) For the Government Diploma in Accountancy Examination (G. D. A.)

(C) For the Institute's Special Examinations in—

(*a*) Junior and Advanced Book-keeping.
(*b*) Shorthand (Theory and Speed).
(*c*) Typewriting.

(D) For the Railway and Government Competitive and Departmental Examinations in important subjects.

New session commences on the 22nd June 1931. Apply with one anna stamp or personally to

M. K. Ghosh, *Principal.*

Presidency Division.

NOTIFICATION.

Calcutta, the 13th June 1931.

Nomination of candidates for inclusion in the provincial panel in connection with the recruitment of English teachers in Government High and 1st Grade Training Schools and Madrasahs and Sub-Inspectors of Schools in the scale of Rs. 75-5-150 (efficiency bar)-5-200 in the Subordinate Educational Service will be made by the Panel Committee of the Presidency Division in August 1931. Applications (in duplicate) in the annexed form will be received by the Inspector of Schools, Presidency Division, up to the 31st July 1931.

1. The posts to which recruitment will be made and the qualifications required for them are shown below:—

(*a*) English teachers in Government High and 1st Grade Training Schools and Madrasahs—B.A. or B.Sc., preferably with Honours of a recognised University with a degree in teaching, or first class M.A. or M.Sc.

(*b*) Sub-Inspectors of Schools—In addition to the above qualifications teaching experience of a satisfactory nature for not less than two years in recognised secondary schools.

(*c*) Special Sub-Inspectors of Schools—B.A., preferably with Honours in Arabic or Persian with a degree in teaching, or first class M.A. in Arabic or Persian. Teaching experience of a satisfactory nature of not less than two years in recognised secondary schools.

2. No person shall be appointed as an English teacher or a Sub-Inspector of Schools who is not of good character and in all respects suitable for appointment to Government service.

3. Every candidate shall furnish certificates written not more than one year prior to the date of application from two responsible persons unconnected with his College or University, and not related to him, testifying to his private character.

4. No person shall be eligible for appointment who is not of sound health, good physique, and active habits and free from organic defect or bodily infirmity and in respect of whom the department is not satisfied that he is physically fit and in all respects suitable for appointment to Government service.

5. No person shall be eligible for appointment who has endeavoured to enlist for his candidature the support of persons of influence or of officials of Government. Spontaneous recommendations from persons interested in or otherwise known to the candidate shall be disregarded.

6. No person shall be considered for admission to the panel, by the Panel Committee of the Presidency Division, unless he is a permanent resident or permanently domiciled within the jurisdiction of the Presidency Division including Calcutta.

7. Candidates shall be under the age of 25 years. This condition may be relaxed by the Director of Public Instruction, Bengal, in the case of teachers who have worked satisfactorily for not less than two years in recognised High Schools under private management up to the age of 30 years. No candidate who is age-barred under this rule shall be admitted to the panel, and if previously admitted a candidate shall have his name removed from the panel on his attaining the age of 30 years or on permanent appointment before that age.

8. No candidate shall apply simultaneously to more than one Inspector of Schools. Every candidate should state definitely if he has applied for nomination by any other Divisional Committee.

9. Every candidate should enclose with his application documents in support of his statement regarding (1) qualifications, academic and professional (M.A., B.A., M.Sc., B.Sc., B.T. diplomas), (2) date of birth (Matriculation certificate), (3) home district (certificate from a gazetted officer), (4) character (certificate from a respectable gentleman), (5) subjects studied at the degree examination, both academic and professional (certificate from the Principal of the College in which he studied) and (6) details of teaching experience with dates and names of institutions (certificates from the authorities of the schools). Testimonials, if any, as to the candidate's ability as lecturer, teacher, etc., may also be produced.

10. Every candidate should state if he is a British subject; if not, he should name the State in India to which he belongs.

11. A person can have only one domicile. In case a candidate claims to have more than one place of residence he should clearly state which one is his legal residence. This should be supported by documentary evidence (certificate from a gazetted officer).

12. The Divisional Panel Committee will interview the candidates, if necessary. The date for the purpose will be communicated to them in due course.

K. N. MITRA,

Inspector of Schools, Presidency Division.

Education Department.

Form of application for appointment to posts of English Teachers and Sub-Inspectors of Schools in the scale of Rs. 75-5-150 (efficiency bar)-5-200 in the Subordinate Educational Service.

1. Name of applicant and present address (in full).

2. Permanent address in full.

3. Date of birth and age last birthday.

4. Place of birth and permanent residence.

5. Nationality at birth, religion and caste.

6. Father's name, place of birth and nationality at birth.

7. Father's address and profession (if dead, give address at date of death).

8. Mother's place of birth and nationality at birth.

9. Name of school last attended before entering University, giving address with dates of entering and leaving.

10. Name of University and College. Give the dates of entering and leaving, and dates of passing examinations. State subjects studied, degrees, honours or prizes obtained and the class and position in the class obtained at all University and other public examinations.

11. Name of the Training College attended. Give year and class of the B.T. degree and the subjects in which you specialised during training.

12. Give details of any original work. If published, copies of the publications should be attached.

13. Give details of any teaching experience with dates and names of institutions. Any testimonials as to your ability as a lecturer, teacher, etc., should be attached.

14. Give names of games played—

(*a*) at school,

(*b*) at college, and

(*c*) after leaving the college.

State whether you have had experience in organising games.

15. State whether you are a trained Scout Master. If so, what troops you have been in charge of and where

16. Name two persons of position (with address in full) who can, if necessary, testify to your character, and to accuracy of your statements.

17. If time since leaving school is not fully accounted for by replies given above, account for the remainder here with dates.

18. (*a*) Are you free from pecuniary embarrassments?

(*b*) If you are under liability to repay money advanced by an institution or party for your education, state the particulars.

19. Have you ever been pronounced unfit at any time for Government employment by the Medical Board, or any other duly constituted medical authority in Bengal? What serious illness have you suffered from since leaving school?

20. Have you appeared at any examination for Government service? If so, state when and for what appointment. With what result?

21. Have you previously been rejected for any appointment in Government service? If so, when and for what reason?

22. Are you willing to be appointed to any post temporarily vacant?

23. Indicate the class of post you prefer, *i.e.*, an English teachership or Sub-Inspectorship or both.

24. State here any facts not recorded above which should be mentioned as supporting your suitability for appointment.

Signature———————————

Date———————————

	Pal, Asutosh	..	Presidency College.
152	Majumdar, Sailendramohan (C)	..	Ditto.
	Mukhopadhyay, Satiprasad	..	Comilla Victoria College.
154	Basu, Rabindranath	..	City College.
	Ray, Dhrubanath	..	Ditto.
	Sinha, Sadhan	..	Non-collegiate student (City College).
157	Majumdar, Sanatkumar (M)	..	Presidency College.
158	Chattopadhyay, Digambar	..	Ripon College.
	Sonkabiraj, Hrishikes	..	Berhampur Krishnath College.
160	Biswas, Rakhalchandra	..	Scottish Church College.
	Majumdar, Prabhatkumar	..	St. Xavier's College.
162	Deb, Bhupendrachandra (C)	..	Sylhet M. C. College.
163	Basak, Sudhansu	..	St. Xavier's College.
	Deva Raj	..	Bangabasi College.
165	Bhattacharyya, Bishnupada	..	Presidency College.
	Mukhopadhyay, Kalipada	..	Bangabasi College.
	Ray, Manilal (C)	..	Vidyasagar College.
168	Dasgupta, Sailendrabijay	..	Bangabasi College.
	Q. Gholam Ghaus (CM)	..	Islamia College.
170	Gupta, Parijat (M)	..	Non-collegiate student (Presidency College).
171	Chakrabarti, Sureschandra (V)	..	Comilla Victoria College.
	Datta, Durgadas, II	..	Bangabasi College.
	Ray, Jyotsnamohan	..	Krishnanagar College.
174	Mallik, Nitaichand (C)	..	Bangabasi College.
	Mukhopadhyay, Sailendramohan	..	Presidency College.
176	Deb, Anilkumar	..	Scottish Church College.
	Guha, Binaykumar	..	Presidency College.
178	Mukhopadhyay, Debes (C)	..	Hughli College.
	Purkayastha, Sunirmal	..	Comilla Victoria College.
180	Bagchi, Ajitsankar (C)	..	Cooch Behar Victoria College.
	Maitra, Adityadas (C)	..	Pabna Edward College.
182	Shaikh Maniruddin Ahamed	..	Islamia College.
183	Majumdar, Sailajakumar	..	Bangabasi College.
184	Bandyopadhyay, Amalchandra	..	St. Xavier's College.
	Brahmachari, Santoshkumar	..	Ditto.
	Jacob, K. J.	..	Ditto.
	Nag, Subratakumar		Non-collegiate student (St. Xavier's College).
	Pal, Saradacharan	..	Sylhet M. C. College.
189	Chandra, Ganeschandra	..	Bangabasi College.
190	Bandyopadhyay, Umaprasad (C)	..	Uttarpara College.
	Deb, Sudhangsubhusan	..	Sylhet M. C. College.
192	De, Ajitkumar (C)	..	St. Paul's College.
	„ Tarakranjan	..	Scottish Church College.
	Misra, Gopalchandra (C)	..	Bankura Wesleyan College.
195	Basu, Santoshkumar	..	Presidency College.
196	Ghosh, Ajitkumar	..	Bankura Wesleyan College.
	Raychaudhuri, Amulyadhan	..	Hughli College.
	Sinha, Dwijendrabinode	..	Comilla Victoria College.
199	Bagchi, Phanindranath	..	Presidency College.
200	Saha, Nripendramohan	..	Bangabasi College.
201	Ghosh, Kanailal	..	Ditto.
	Mukhopadhyay, Tarapada	..	Non-collegiate student (St. Paul's College).
203	Basu, Sisirkumar	..	Presidency College.
	Dasgupta, Himansukumar	..	Chittagong College.
	Sarkar, Goshthabihar	..	Non-collegiate student (St. Paul's College).
206	Dattadalal, Sudhirkumar	..	Daulatpur Hindu Academy.
	Ghosh, Binaykrishna	..	Presidency College.
	„ Subhransu (M)	..	Non-collegiate student (St. Xavier's College).
	Reade, Clarabel	..	Scottish Church College.
	Sil, Radhaballabh	..	Ditto.
211	Chaudhuri, Mahadeb (M)	..	Bangabasi College.
	Das, Purnendulal	..	Scottish Church College.
	Guhathakurta, Nirmalkumar	..	Bhowanipur Asutosh College.
	Mitra, Debiprasanna	..	St. Xavier's College.
215	Pratihar, Sudhirchandra	..	Midnapur College.
	Sen, Arunbikas	..	Non-collegiate student (Chittagong College).
217	Das, Nisikanta	..	Gauhati Cotton College.
	Maiti, Sarojkumar	..	Scottish Church College.
219	Bandyopadhyay, Sudhansukumar	..	Bangabasi College.
	Datta, Sibchandra	..	Vidyasagar College.
221	Dam, Krishnalal	..	Bagerhat College.
	Nagchaudhuri, Sunilkumar	..	Scottish Church College.
223	Gupta, Lalitmohan	..	Ditto.
	Thomas, K. N.	..	Non-collegiate student (Serampur College).
225	Abdul Latif (C)	..	Pabna Edward College.
	Dasgupta, Sisirkumar	..	City College.
227	Neogthengal, Balaram (V)	..	Gauhati Cotton College.
228	Dattachaudhuri, Rabindrakumar	..	Scottish Church College.
	Sengupta, Kumarjyoti	..	Berhampur Krishnath College.
230	Ghosh, Sudhirkumar, II	..	City College.
	Saker, Dudley Carlyle (V)	..	St. Xavier's College.
232	Datta, Haripada	..	Sylhet M. C. College.
	Mitra, Nandagopal	..	Bhowanipur Asutosh College.
	R. Sadagopan (V)	..	St. Xavier's College.

235	Acharyya, Samadhar	.. St. Paul's College.
	Bandyopadhyay, Sarbaribhushan	.. Bangabasi College.
	Dasgupta, Nanigopal	.. Non-collegiate student (Chittagong College).
238	Hajra, Harinarayan (C)	.. Bankura Wesleyan College.
	Marik, Haraprasad	.. St. Xavier's College.
	Mitra, Jyotirindranath	.. Ditto.
	Sen, Taraknath	.. City College.
242	Bandyopadhyay, Amiyagopal	.. Bangabasi College.
	Debbarman, Pramodranjan	.. Comilla Victoria College.
	Gupta, Surendrachandra	.. Presidency College.
	Lahiri, Dhirendranath	.. Berhampur Krishnath College.
	Majumdar, Subhransusekhar	.. Presidency College.
	Md. Ibrahim	.. Islamia College.
	Simpson, Noel	.. St. Joseph's College.
249	Mitra, Bikaschandra	.. Presidency College.
250	Das, Sunilranjan	.. Scottish Church College.
	Datta, Sarojkumar, I	.. Ditto.
	Ghosh, Bireswar	.. Presidency College.
	Misra, Parbatiprasad	.. Non-collegiate student (Rajshahi College).
	Saha, Gopendrakrishna	.. City College.
	Sur, Sanatkumar	.. Bangabasi College.
256	Mukhopadhyay, Mayaprasanna	.. City College.
	Raychaudhuri, Kshitischandra	.. Bangabasi College.
	Sarkar, Bidhubhushan	.. Rangpur Carmichael College.
259	Bhattacharyya, Nikhileswar	.. Non-collegiate student (Rajshahi College).
	Chakrabarti, Jyotischandra	.. Sylhet M. C. College.
	Datta, Sukumar	.. Bhowanipur Asutosh College.
	Majumdar, Ramlal	.. Bangabasi College.
263	Ghosh, Amarendranath	.. Ditto.
	Ray, Bholanath	.. Midnapur College.
	Ray, Panchucharan	.. St. Xavier's College.
266	Bhattacharyya, Parimalkumar	.. Cooch-Behar Victoria College.
	Chaudhuri, Pratulkumar	.. Comilla Victoria College.
	Ghosh, Rasbihari	.. Presidency College.
269	Chakrabarti, Sunilkanta	.. Scottish Church College.
	Jash, Karaliprasad	.. Ditto.
271	Ghosh, Kartikchandra	.. Vidyasagar College.
272	Chaudhuri, Dhirendrakumar (C)	.. Bangabasi College.
	Datta, Rabindranath	.. Krishnanagar College.
	Mukhopadhyay, Sukumar	.. Cooch-Behar Victoria College.
	Panigrahi, Jibankrishna	.. Scottish Church College.
	Ray, Sribaschandra	.. City College.
277	Chaudhuri, Durgacharan	.. St. Xavier's College.
	Guha, Sukumar (C)	.. Daulatpur Hindu Academy.
279	Mitra, Anilkumar	.. Bankura Wesleyan College.
	Mukhopadhyay, Subodhchandra	.. Bangabasi College.
281	Datta, Amarendranath	.. Sylhet M. C. College.
	Ghosh, Nalinbihari	.. Presidency College.
	Goswami, Banamali	.. Sylhet M. C. College.
	Maitra, Ajitkumar	.. Non-collegiate student (Rajshahi College).
285	Das, Susilranjan	.. Chittagong College.
	Sen, Dilipkumar	.. Ditto.
	„ Mahatapchandra	.. Presidency College.
288	Aziz Ahmad Md. Hussain	.. Non-collegiate student (Rajshahi College).
	Bandyopadhyay, Kanailal	.. Bhowanipur Asutosh College.
	Chakrabarti, Jitendranath	.. Barisal Brajamohan College.
	Kabasi, Jasodanandan	.. Bangabasi College.
	Mukhopadhyay, Sankarprasad	.. Hughli College.
293	Basu, Sukumar	.. Bhowanipur Asutosh College.
	Bhattacharyya, Bimalkanta	.. Non-collegiate student (Bangabasi College).
	Ghosh, Bhagabaticharan	.. Bangabasi College.
296	Gangopadhyay, Sukhamay	.. Mymensingh A. M. College.
297	Bhar, Krishnachandra	.. Scottish Church College.
	Chaudhuri, Bimalendranath	Presidency College.
	Mukhopadhyay, Jyotirmay	.. Scottish Church College.
300	Chattopadhyay, Anantakumar	.. Bangabasi College.
	Ghosh, Sailendrakumar	.. Ditto.
302	„ Bhupatikumar	.. Mymensingh A. M. College.
	Das, Dakshinaranjan	.. Sylhet M. C. College.
	Datta, Satyendranath	.. Ditto.
	Mandal, Krishnadas	.. Bankura Wesleyan College.
	Saha, Upendralal	.. Barisal Brajamohan College.
307	Goswami, Madanchandra	.. Gauhati Cotton College.
	Konar, Upendrakrishna	.. Uttarpara College.
	Ray, Ajitgopal	.. Presidency College.
310	Dasgupta, Tarunendu	.. Bangabasi College.
	Guha, Mahendranath	.. Presidency College.
	Mukhopadhyay, Jogeswar	.. Bangabasi College.
313	Das, Ratnadhar	.. Gauhati Cotton College.
	Nandi, Haripada	.. Chittagong College.
315	Bagnall, Lionel J.	.. Non-collegiate student (La Martiniere College).
	Ghosh, Baidyanath	.. City College.
	„ Chandrasekhar	.. Bangabasi College.

318	Bhattacharyya, Murarimohan	..	Non-collegiate student (Vidyasagar College).
	Datta, Saratchandra	..	Ripon College.
	Mukhopadhyay, Chittaranjan	..	St. Xavier's College.
	,, Haripada	..	Presidency College.
	Pradhan, Surendranath	..	Midnapur College.
323	Khondakar Bazbali	..	Barisal Brajamohan College.
	Mahammad Daragali	..	Rajshahi College.
325	Chaudhuri, Sailendranath	..	Daulatpur Hindu Academy.
	Ghosh, Dulalchandra	..	Vidyasagar College.
	Nag, Niharkumar (C)	..	Daulatpur Hindu Academy.
	Phillip, P. T.	..	Serampur College.
329	Chattopadhyay, Sibsankar	..	Vidyasagar College.
	Ghosh, Praphullakumar	..	City College.
	Sarkar, Amarendrakumar	..	Ditto.
332	Mukhopadhyay, Guruprasanna	..	Bhowanipur Asutosh College.
	Pal, Radhagobinda	..	City College.
	Palit, Nripendramohan	..	Sylhet M. C. College.
	Saharay, Subodhchandra	..	City College.
336	Pal, Haragobinda (M)	..	Sylhet M. C. College.
	Ray, Santkumar	..	Bhowanipur Asutosh College.
338	Basu, Anilchandra	..	Scottish Church College
	De, Swarnakumar	..	Barisal Brajamohan College.
	Mitra, Satyendranath	..	Bhowanipur Asutosh College.
341	Bandyopadhyay, Madhusudan	..	Bangabasi College.
	Bhattacharyya, Sachindramohan	..	Bankura Wesleyan College.
	Sengupta, Mohitkumar	..	Daulatpur Hindu Academy.
344	Bhaumik, Amarendranath	..	Non-collegiate student (Pabna Edward College).
	Chattopadhyay, Amiyakumar	..	Non-collegiate student (Comilla Victoria College).
	Ghosh, Arabinda	..	St. Paul's College.
	Mitra, Bimalchandra	..	Scottish Church College.
	Sen, Ajayendu	..	Bangabasi College.
349	Das, Kalicharan	..	St. Xavier's College.
	Mitra, Bijaykumar	..	Scottish Church College.
	Mukhopadhyay, Lalitkumar	..	Presidency College.
	,, Ramaprasad	..	Scottish Church College.
353	Basak, Amulyakumar (C)	..	Bankura Wesleyan College.
	Chakrabarti, Bishnupada	..	Bangabasi College.
	Ghosh, Debendrabijay	..	Bhowanipur Asutosh College.
356	Chakrabarti, Nabakumar	..	Bangabasi College.
	Mukhopadhyay, Chandranath	..	St. Xavier's College.
	Ray, Sachikanta	..	Presidency College.
359	Ash, Gopeschandra	..	Sylhet M. C. College.
	Dobchaudhuri, Haroswar (M)	..	Gauhati Cotton College.
	Ghosh, Sanatkumar	..	Bangabasi College.
	Pradhan, Hemnarayan	..	St. Xavier's College.
363	Bhattacharyya, Anadicharan	..	City College.
	,, Bhupatinath	..	Ripon College.
	Connolly, Aloysius (V)	..	St. Joseph's College.
	Gupta, Dhrubamohan	..	City College.
	Sahu, Sripaticharan	..	Midnapur College.
368	Dasgupta, Menaka	..	Bethune College.
	Datta, Satyendranath	..	Bankura Wesleyan College.
	Otto, F. C.	..	Non-collegiate student (La Martiniere College).
	Sarkar, Gopendranath	..	Howrah Narasinha Dutt College.
	Sinha, Nilmadhab	..	Presidency College.
373	Raychaudhuri, Sudhirranjan	..	Barisal Brajamohan College.
	Sen, Kshitibhushan	..	Presidency College.
375	Dasgupta, Arabindraprasad	..	Bangabasi College.
	Vrajlal Purshotam Mehta	..	City College.
377	Basu, Sambhunath	..	Bhowanipur Asutosh College.
	Bhattacharyya, Byomkes	..	Bangabasi College.
	Chattopadhyay, Anantakumar	..	Scottish Church College.
	Ghosh, Satyendranarayan	..	Non-collegiate student (Rajshahi College).
	Sengupta, Tanima	..	Non-collegiate student (Scottish Church College).
382	Sarma, Puspadhan	..	Gauhati Cotton College.
	Sengupta, Hemendranath	..	Berhampur Krishnath College.
384	Basu, Arunkumar	..	Scottish Church College.
	,, Satyendrakumar	..	Midnapur College.
	De, Akshaykumar	..	Comilla Victoria College.
	Dobgoswami, Mohinimohan	..	Gauhati Cotton College.
	Kunda, Matilal	..	Bangabasi College.
	Mitra, Nirmalkumar	..	Scottish Church College.
390	Bag, Kanankanta	..	Bankura Wesleyan College.
	Ghosh, Kiranchandra	..	Vidyasagar College.
	,, Saileschandra	..	Daulatpur Hindu Academy.
	Manna, Balaram	..	City College.
	Palchaudhuri, Makhanlal	..	Sylhet M. C. College.
	Ray, Manilal	..	City College.
	Talukdar, Jogeschandra	..	Non-collegiate student (Rajshahi College).
397	Bandyopadhyay, Debendranath	..	Bangabasi College.
	Goswami, Prabodhchandra	..	Mymensingh A. M. College.
	Guha, Syamranjan	..	St. Xavier's College.
	Rodgery, Dudley Merryn Gronville	..	Non-collegiate student (La Martiniere College).

401	Das, Niradbihari	..	Sylhet M. C. College.
	Khastagir, Santimay	..	Chittagong College.
	Pal, Krishnabihari	..	Cooch-Behar Victoria College.
	Saha, Manomohan	..	Bangabasi College.
405	Gangopadhyay, Debendranath	..	Presidency College.
	Mukhopadhyay, Dharanimohan	..	Howrah Narasinha Dutt College.
	Sinha, Ajitmohan	..	Bankura Wesleyan College.
408	Bagchi, Prakaschandra	..	Non-collegiate student (Rajshahi College).
	Chakrabarti, Dhirendranath	..	St. Xaver's College.
	Mukhopadhyay, Tarabhushan	..	Scottish Church College.
411	Abdul Wahed	..	Comilla Victoria College.
	Bandyopadhyay, Ramprasad	..	Howrah Narasinha Dutt College.
	Bhattacharyya, Chintamani	..	Bangabasi College.
	Ghosh, Tariniprasad	..	Scottish Church College.
	Kundu, Radhakrishna	..	Mymensingh A. M. College.
416	Bhattacharyya, Nareschandra	..	Sylhet M. C. College.
	Chattopadhyay, Hirendranath	..	Bangabasi College.
	De, Harendrachandra	..	Sylhet M. C. College.
	Mitra, Sudhirkumar	..	Narail Victoria College.
	Mukhopadhyay, Phanindranath	..	Scottish Church College.
	Ray, Narendrakumar	..	Ditto.
422	Chaudhuri, Sailendranarayan	..	Bangabasi College.
	Naskar, Kalasasi	..	Ripon College.
	Sen, Hridayranjan	..	Chittagong College.
425	Md. Abdur Rahman	..	Islamia College.
	Platel, Raymond F.	..	Non-collegiate student (St. Xavier's College).
427	Barua, Sasankabimal	..	Chittagong College.
	Basu, Abanicharan	..	Mymensingh A. M. College.
	,, Amarendranath	..	Scottish Church College.
	Bhattacharyya, Dhurjatiprasad	..	Bangabasi College.
	Datta, Haripada	..	Gauhati Cotton College.
	Rauchaudhuri, Krishnadas	..	Non-collegiate student (Bagerhat College).
	Sen, Suprakas	..	Scottish Church College.
434	Dasgupta, Harshakumar	..	Rangpur Carmichael College.
	Goswami, Dhaneswar	..	Gauhati Cotton College.
	Ray, Jatindramohan	..	Comilla Victoria College.
437	Basu, Satyabrata	..	City College.
	Chakrabarti, Birendrakumar	..	Bangabasi College.
	Chattopadhyay, Sadananda	..	Bhowanipur Asutosh College.
	Ghosh, Syamacharan	..	Scottish Church College.
441	Gupta, Sudhirkumar, II	..	Barisal Brajamohan College.
	Sanyal, Biswanath	..	Non-collegiate student (Serampur College).
	Woolman, Vernon	..	St. Joseph's College.
444	De, Amiyakrishna	..	Midnapur College.
	Ghosh, Bimalendu	..	St. Xavier's College.
	Majumdar, Abanikanta, II	..	Rajshahi College.
	Mohammad Ali Akbar	..	Islamia College.
448	Chattopadhyay, Mukul	..	St. Xavier's College.
	Chaudhuri, Saransumohan	..	Ditto.
	Ghosh, Sudhirchandra	..	Chittagong College.
	Raychaudhuri, Subodhchandra	..	Berhampur Krishnath College.
452	Das, Akhilchandra	..	Non-collegiate student (Pabna Edward College).
	,, Kumudsankar	..	Daulatpur Hindu Academy.
	Saha, Manomohan	..	Non-collegiate student (Comilla Victora College).
	Sanyal, Nripendrasaran	..	Presidency College.
	Sur, Amarendranath	..	Non-collegiate student (Serampur College).
	S. A. Hamid Qadri (V)	..	Non-collegiate student (St. Paul's College).
458	Basu, Nirmalendu	..	Bangabasi College.
	Bhattacharyya, Madhusudan	..	Presidency College.
	Mukhopadhyay, Krishnadas	..	St. Joseph's College.
	Naskar, Rajanikanta	..	Bangabasi College.
	Pal, Tulsiranjan	..	Ditto.
	Rakshit, Gopendrakumar	..	Chittagong College.
464	Basu, Arabinda	..	Non-collegiate student (Pabna Edward College).
	Chakrabarti, Harischandra	..	Daulatpur Hindu Academy.
	Dasgupta, Amulyaranjan	..	Comilla Victoria College.
	Datta, Sisirranjan	..	City College.
	,, Sukumar	..	Bankura Wesleyan College.
469	Bhattacharyya, Kanailal	..	City College.
	Ghosh, Sudhirkumar, II	..	Scottish Church College.
	Gurcharan Singh	..	Chittagong College.
	Pal, Santoshkumar, II	..	Bangabasi College.
	Sengupta, Aruna	..	Bethune College.
474	Aich, Bhupatilal	..	Ripon College.
	Dan, Sarojkumar	..	City College.
	Datta, Bhupendradulal	..	Non-collegiate student (Rajshahi College).
	Ray, Sukhamay	..	Mymensingh A. M. College.
	Saha, Munindramohan	..	Non-collegiate student (Rajshahi College).
	Syed Shamsher Ali	..	Daulatpur Hindu Academy.

480	Chaudhuri, Manindrabhushan	.. Scottish Church College.
	Das, Subodhkumar	.. Daulatpur Hindu Academy.
	Mandal, Narayanchandra	.. Scottish Churches College.
	Purkayastha, Asutosh	.. Sylhet M. C. College.
	Sarkar, Niradbaran	.. Bankura Wesleyan College.
	Sinha, Narmadabala	.. Non-collegiate student, (Roll Cal. F. N. I.)
486	Basu, Dwijendrakrishna	.. Scottish Church College.
	Chaudhuri, Ambujakanta	.. City College.
	De, Brajanath	.. Scottish Church College.
	Kundu, Nripendralal	.. Non-collegiate student (Bangabasi College).
	Mitra, Sudhansukumar	.. Midnapur College.
	Palit, Sudhansukumar	.. Cooch-Behar Victoria College.
	Ray, Nikhilkrishna	.. Non-collegiate student (Rajshahi College).
	Raychaudhuri, Sachindranath	.. Bangabasi College.
	Sengupta, Kesabchandra	.. Comilla Victoria College.
495	Basu, Dhirendranath	.. Bangabasi College.
	Bera, Satyaranjan	.. Bankura Wesleyan College.
	Ghosh, Nitaichandra	.. Bangabasi College.
498	Chaudhuri, Balaknath	.. Berhampur Krishnath College.
	Datta, Manomohan	.. Gauhati Cotton College.
	Ghosh, Sudhindrakumar	.. Comilla Victoria College.
	Nandi, Nirendranath	.. St. Xavier's College.
	Ray, Amalendu	.. Barisal Brajamohan College.
	Sen, Prabodhchandra	.. Bhowanipur Asutosh College.
	Sengupta, Bimalakanta	.. Bangabasi College.
505	Abdul Matin	.. Sylhet M. C. College.
	Kar, Kanaichandra	.. City College.
	Kole, Kalipada	.. Bangabasi College.
508	Basu, Bishnucharan	.. Presidency College.
	Bhattacharyya, Sudhircharan	.. Vidyasagar College.
	De, Atalbihari	.. Bankura Wesleyan College.
	Ghosh, Sukumar	.. Bangabasi College.
	Mitra, Sudhanshubhushan	.. Bhowanipur Asutosh College.
	Poddar, Jitendranath	.. Faridpur Rajendra College.
	Saha, Mahendranath	.. Non-collegiate student (Rajshahi College.).
	„ Suklal	.. Bangabasi College.
516	Abdur Razzaque	.. Non-collegiate student (Berhampur Krishnath College).
	Bhaumik, Makhanlal	.. Bhowanipur Asutosh College.
	De, Loknath	.. Mymensingh A. M. College.
	Ghosh, Trisandhyeschandra	.. Bhowanipur Asutosh College.
520	Sarkar, Panchkarichandra	.. Cooch Behar Victoria College.
521	Bandyopadhyay, Mohinimohan	.. Bankura Wesleyan College.
	Basu, Sarojkanti	.. Non-Collegiate student (Rajshahi College.)
	Ghorai, Himansubhushan	.. Non-collegiate student (Bangabasi College).
	Md. Matinul Haque	.. Berhampur Krishnath College.
	Quazi Abul Khair	.. Non-collegiate student (Hughli College.)
526	Bhattacharyya, Jyotischandra	.. Rangpur Carmichael College.
	Kelly, M.	.. St. Edmunds College.
	Kundu, Debaprasad	.. Chittagong College.
	Maulik, Sukeschandra	.. Rangpur Carmichael College.
530	Batabyal, Sambhunath	.. Presidency College.
	Ray, Ramkrishna	.. Bangabasi College.
	„ Saktipada	.. Berhampur Krishnath College.
	„ Sisirkumar	.. Chittagong College.
	Sanyal, Durgarani	.. Non-collegiate student (Bethune College.)
535	Gangopadhyay, Adityakumar	.. Midnapur College.
	Pereira, Augustine Eric	.. St. Xavier's College.
	Sarkar, Jogendralal	.. Pabna Edward College.
538	Datta, Sanjibkumar	.. City College.
	Gangopadhyay, Dharanikanta	.. Bangabasi College.
	Mandal, Bijaykumar	.. Scottish Church College.
541	Bandyopadhyay, Biswanath	.. Ditto.
	Chattopadhyay, Narendranath	.. Barisal Brajamohan College.
	Chaudhuri, Rajkumar	.. Berhampur Krishnath College.
	Mandal, Bishnupada	.. St. Xavier's College.
	Sen, Amalkumar	.. Bhowanipur Asutosh College.
	Surray, Susilkumar	.. City College.
547	Dattagupta, Hirendranath	.. Bangabasi College.
	Ghosh, Sudhirchandra	.. Scottish Church College.
	Kundu, Batakrishna	.. Krishnagar College.
	Mitra, Subhransubhushan	.. Non-collegiate student (Presidency College).
	Pal, Hrishikes	.. St. Xavier's College.
	Saha, Amalendubhushan	.. Non-collegiate student (Rajshahi College.)
553	Biswas, Bhupendranath	.. Non-collegiate student (Barisal Brajamohan College).
	Chakrabarti, Umeschandra	.. Comilla Victoria College.
	Chattopadhyay, Prabhatkumar	.. Bangabasi College.
	Dasgupta, Bhupeschandra	.. Sylhet M. C. College.
	Ghosh, Nagendranath	.. Barisal Brajamohan College.

	Mukhopadhyay, Debendranath	..	Bangabasi College.
	Ray, Sudhansubhushan	..	Non-collegiate student (Pabna Edward College).
560	Chaudhuri, Bhubanchandra	..	Gauhati Cotton College.
	Datta, Sachindranath	..	Bangabasi College.
	Day, Thomas Harvey	..	Non-collegiate student (La Martiniere College).
	Mandal, Arabinda	..	Bangabasi College.
	Pal, Bishnupada	..	Pabna Edward College.
	Syed Abdur Rashid	..	Sylhet M. C. College.
566	Bagchi, Tararaman	..	Bangabasi College.
	Chand Mull	..	City College.
	Datta, Ramanimohan	..	St. Xavier's College.
	Dhara, Nalinikanta	..	Serampur College.
	Ghoshal, Jibandhan	..	Ripon College.
	Narayanchaudhuri, Raj Hirendra	..	Non-collegiate student (Comilla Victoria College).
572	Bandyopadhyay, Gauriprasad	..	Bhowanipur Asutosh College.
	Basu, Arunkumar (M)	..	Barisal Brojamohan College.
	Chakravarti, Binaybhushan	..	Ditto.
	Kumar, Baradakanta	..	St. Xavier's College.
	Md. Masudal Haque	..	Islamia College.
	Nag, Sudhirchandra	..	Barisal Brajamohan College.
	Nanday, Triptiprakas	..	St. Paul's College.
	Sen, Biswanath	..	St. Xavier's College.
	Sengupta, Jyotirmay	..	Scottish Church College.
581	Basu, Manindranath	..	Bangabasi College.
	Bhattacharyya, Manindranath	..	Ditto.
	Chakrabarti, Sailendranath	..	City College.
	De, Mahadebprasad	..	Bankura Wesleyan College.
	Ghosh, Bhupendranath	..	Non-collegiate student (Rajshahi College).
	Gomes, Melville	..	St. Joseph's College.
	Maitra, Nirmalkumar	..	Scottish Church College.
	Pal, Asutosh	..	Chittagong College.
	Pramanik, Bijaykrishna	..	Scottish Church College.
	Santra, Naliniranjan	..	Midnapur College.
	Saha, Satyakinkar	..	City College.
592	Bandyopadhyaychakrabarti, Anadimohan		Bangabasi College.
	Basu, Asutosh	..	Scottish Church College.
	Ray, Nirendranath	..	Bhowanipur Asutosh College.
	Raychaudhuri, Chittaranjan	..	City College.
596	Basu, Amarendranath	..	Narail Victoria College.
	Chakrabarti, Janardan	..	Barisal Brajamohan College.
	Datta, Ranajitkumar	..	Scottish Church College.
	Debchaudhuri Jitendranarayan	..	Sylhet M. C. College.
	Guha, Sudhirranjan	..	Barisal Brajamohan College.
	Ray, Kshirodchandra	..	Bangabasi College.
602	Mathew, T. M.	..	St. Paul's College.
	Mukhopadhyay, Santoshkumar	..	City College.
	Pal, Nabinchandra	..	Daulatpur Hindu Academy.
	Raychaudhuri, Kalipada	..	Barisal Brajamohan College.
	Sen, Sitalprasad	..	City College.
607	Chattopadhyay, Sudhananda	..	Scottish Church College.
	Datta, Bijanbihari	..	Vidyasagar College.
	„ Hemendranath	..	Non-collegiate student (Vidyasagar College).
	Kirti, Abanikumar	..	Non-collegiate student (Hughli College).
	Mahanti, Mrityunjay	..	Midnapur College.
	Ray, Rabikana	..	Bethune College.

SECOND DIVISION.

(In alphabetical order.)

	Abdul Ahad	..	Islamia College.
	Abdul Hakim Khan	..	Barisal Brajamohan College.
	Abdul Latif	..	Presidency College.
	Abdul Mannan	..	Comilla Victoria College.
	Abdul Qaiyum Khan	..	City College.
	Abdur Rouf	..	Islamia College.
	Abraham A. G.	..	St. Paul's College.
	Abu Md. Abdulla	..	Presidency College.
	Abu Mohammed Jalaluddin	..	Chittagong College.
10	Abul Kassem Talukder	..	Islamia College.
	Abul Md. Shamsher Ally	..	Non-collegiate student (Pabna Edward College).
	Abu Taiyab Md. Fazlunnur	..	Sylhet M. C. College.
	Acharyya, Binaykrishna	..	Non-collegiate student (Vidyasagar College).
	„ Hemchandra	..	Non-collegiate student (Bangabasi College).
	„ Jitendranath	..	City College.
	Adhikari, Sudhirkumar	..	Mymensingh A. M. College.
	Ahmed Ali Khan	..	Non-collegiate student (Pabna Edward College).
	Aim, Annadacharan	..	Comilla Victoria College.
	Aribahadur Gurung	..	Scottish Church College.
20	Arthur Aviot	..	St. Joseph's College.

	Azaharal Haque	..	Chittagong College.
	Bagchi, Amalchandra	..	Non-collegiate student (Scottish Church College).
	,, Kalisankar	..	Scottish Church College.
	,, Ranajitkumar	..	Daulatpur Hindu Academy.
	,, Sasisekhar	..	Non-collegiate student (Vidyasagar College.)
	Bandyopadhyay, Ajaykumar	..	City College.
	,, Akinchan	..	Bangabasi College.
	,, Amarendranath	..	St. Xavier's College.
	,, Amiyanath	..	Rajshahi College.
30	,, Anantakumar	..	Bangabasi College.
	,, Bishnudas	..	Ditto.
	,, Debicharan	..	St. Xavier's College.
	,, Dhirendranath	..	Ripon College.
	,, Gopalchandra	..	Barisal Brajamohan College.
	,, Haripada	..	Ditto.
	,, Hemantakumar	..	Bangabasi College.
	,, Himansulal	..	Bhowanipur Asutosh College.
	,, Kedareswar	..	Bangabasi College.
	,, Khagendranath	..	Non-collegiate student (Bangabasi College).
40	,, Kshituswar	..	Vidyasagar College.
	,, Mahadeb	..	St. Xavier's College.
	,, Mukundalal	..	Berhampur Krishnath College.
	,, Nalinbihari	..	City College.
	,, Nareschandra	..	Non-collegiate student (Comilla Victoria College).
	,, Nirendranath	..	Bangabasi College.
	,, Nitaicharan	..	Ditto.
	Prabhatkumar	..	Scottish Church College.
	,, Probodhkumar	..	Ditto.
	,, Pranaranjan	..	Bangabasi College.
50	,, Praphullakumar	..	City College.
	,, Purnendu, II	..	Bangabasi College.
	,, Rabindranath	..	Berhampur Krishnath College.
	,, Ratinath	..	Bhowanipur Asutosh College.
	,, Sailendranath	..	Berhampur Krishnath College.
	,, Saileschandra	..	Scottish Church College.
	,, Santoshkumar	..	Ditto.
	,, Saratchandra	..	Vidyasagar College.
	,, Saratchandra	..	Howrah Narasinha Dutt College.
	,, Sibananda	..	Bangabasi College.
60	,, Sibaprasad	..	Scottish Church College.
	,, Sriranjan	..	Bhowanipur Asutosh College.
	,, Sudhansukumar	..	Ditto.
	,, Sudhansusekhar	..	Non-collegiate student (Rajshahi College).
	,, Sudhirkumar, II	..	Bangabasi College.
	,, Sunilchandra	..	Bankura Wesleyan College.
	,, Susilkumar	..	City College.
	,, Syamapada	..	Non-collegiate student (Krishnagar College).
	,, Tapankumar	..	Bangabasi College.
	Banik, Herambachandra	..	Presidency College.
70	Baral, Brajamohan	..	Bhowanipur Asutosh College.
	,, Kasipati	..	Howrah Narasinha Dutt College.
	Bardhan, Punyendramohan	..	Non-collegiate student (Comilla Victoria College).
	Barik, Sarojendranath	..	Vidyasagar College.
	Barman, Samarendralal	..	Uttarpara College.
	Barmanray, Subodhchandra	..	Vidyasagar College.
	Basak, Baidyanath	..	Scottish Church College.
	,, Praphullaprasun	..	Bangabasi College.
	Basu, Abanimohan	..	Comilla Victoria College.
	,, Abanindranath	..	Bhowanipur Asutosh College.
80	,, Ajitkumar	..	Ditto.
	,, Amalnarayan	..	Barisal Brajamohan College.
	,, Amarendrakumar	..	St. Xavier's College.
	,, Amiya	..	Bethune College.
	,, Amritalal	..	St. Xavier's College.
	,, Arunbikas	..	Bangabasi College.
	,, Bhabeschandra	..	Midnapur College.
	,, Biswanath	..	St. Xavier's College.
	,, Chittaranajan	..	Daulatpur Hindu Academy.
	,, Durgacharan	..	Vidyasagar College.
90	,, Japendrakumar	..	St. Paul's College.
	,, Jatindranath	..	Howrah Narasinha Dutt College.
	,, Jayantakumar	..	Faridpur Rajendra College.
	,, Jyotirindranath	..	St. Xavier's College.
	,, Madhusudan	..	Bangabasi College.
	,, Minendranath	..	Narail Victoria College.
	,, Prabhatkumar	..	Bhowanipur Asutosh College.
	,, Pramodranjan	..	Krishnagar College.
	,, Purnendu	..	St. Xavier's College.
	,, Sachindrakumar	..	Bangabasi College.
100	,, Sasankasekhar	..	St. Paul's College.
	,, Satyaprasad	..	Bangabasi College.
	,, Sudhirkumar	..	Non-collegiate student (Vidyasagar College).
	,, Sudhirranjan	..	Barisal Brajamohan College.
	,, Tapobikas	..	Midnapur College.

	Basuchaudhuri, Jatindranath	..	Non-collegiate student (Barisal Brajamohan College).
	Basuraychaudhuri, Manilal	..	City College.
	Bello, Ronald Monte	..	St. Joseph's College.
	Bennett, John Charles	..	Non-collegiate student (La Martiniere College).
	Bera, Jibankrishna	..	Bangabasi College.
110	Bhabak, Krishnadhan	..	Ditto.
	Bhadra, Anilkumar	..	Bhowanipur Asutosh College.
	,, Bishnuprasanna	..	Daulatpur Hindu Academy.
	Bhaduri, Gopalchandra	..	Ripon College.
	Bhar, Manoranjan	..	Hughli College.
	Bhatta, Praphullakumar	..	Bangabasi College.
	Bhattacharyya, Amulyaratan	..	Narail Victoria College.
	,, Bankimchandra	..	Bangabasi College.
	,, Bhagabaticharan	..	Rangpur Carmichael College.
	,, Bibhutibhushan	..	Barisal Brajamohan College.
120	,, Bimalacharan	..	Midnapur College.
	,, Bimalkumar	..	Narail Victoria College.
	,, Birendranarayan	..	Non-collegiate student (Rajshahi College).
	,, Biswabandhu	..	St. Xavier's College.
	,, Debtosh	..	Presidency College.
	,, Haimajasankar	..	Rajshahi College.
	,, Harendralal	..	Non-collegiate student (Bangabasi College).
	,, Hemchandra	..	Non-collegiate student (Barisal Brajamohan College).
	,, Gopalchandra	..	Serampur College.
	,, Jitendrachandra	..	Hughli College.
130	,, Jnanajranjan	..	Bangabasi College.
	,, Kamakhyacharan	..	Non-collegiate student (Krishnagar College).
	,, Kamakhyapada	..	St. Xavier's College.
	,, Kesabchandra	..	Bangabasi College.
	,, Khagendranath	..	Bhowanipur Asutosh College.
	,, Niharkumar	..	Scottish Church College.
	,, Narasananda	..	Bhowanipur Asutosh College.
	,, Prabhatchandra	..	Comilla Victoria College.
	,, Punyabrata	..	Bangabasi College.
	,, Ramanimohan	..	Non-collegiate student (Vidyasagar College).
140	,, Sadananda	..	Krishnagar College.
	,, Sarbamangala	..	Non-collegiate student (Pabna Edward College).
	,, Srikanta	..	Berhampur Krishnath College.
	,, Sudhindranath	..	Bangabasi College.
	,, Subaschandra	..	Ripon College.
	,, Susilbandhu	..	Non-collegiate student (Presidency College).
	,, Susilkumar	..	Daulatpur Hindu Academy.
	,, Ushapada	..	Scottish Church College.
	Bhaumik, Bibhutibhushan	..	Pabna Edward College.
	,, Brajagopal	..	City College.
150	,, Lalmohan	..	Non-collegiate student (Comilla Victoria College).
	,, Nareschandra	..	Bangabasi College.
	,, Praphullakumar	..	St. Xavier's College.
	,, Saileschandra	..	Cooch-Behar Victoria College.
	,, Satiprasanna	..	Non-collegiate student (Comilla Victoria College).
	Bhuiya, Haridas	..	Bangabasi College.
	Biswas, Arabindabilas	..	Non-collegiate student (Rajshahi College).
	,, Aghorchandra	..	Mymensingh A. M. College.
	,, Ajaykumar	..	St. Xavier's College.
	,, Bibhutiranjan	..	Comilla Victoria College.
160	,, Gyanaranjan	..	Bangabasi College.
	,, Hemchandra	..	Non-collegiate student (Barisal Brajamohan College).
	,, Khagendranath	..	Faridpur Rajendra College.
	,, Niranjan	..	Krishnanagar College.
	,, Protiva	..	Non-collegiate student (Scottish Church College).
	,, Radhakanta	..	Bangabasi College.
	,, Santoshkumar	..	Bagerhat College.
	,, Surendranath	..	City College.
	Bora, Durgadas	..	Ditto.
	,, Kamaleswar	..	Gauhati Cotton College.
170	,, Rebatimohan	..	Ditto.
	Carrasco Hilary Baptist	..	Non-collegiate student (St. Xavier's College).
	Chaki, Bipinbihari	..	Mymensingh A. M. College.
	Chakrabarti, Amarnath	..	Bangabasi College.
	,, Arunkanta	..	Barisal Brajamohan College.
	,, Atulchandra	..	Ditto.
	,, Bijaykrishna	..	Bangabasi College.
	,, Birendrachandra	..	Mymensingh A. M. College.
	,, Birendrakisor	..	Comilla Victoria College.
	,, Chandranath	..	Non-collegiate student (Comilla Victoria College).
180	,, Ganeschandra	..	Bangabasi College.

	Chakrabarti,	Harakumar	..	Sylhet M. C. College.
	,,	Hemendralal	..	Bangabasi College.
	,,	Kamalaranjan	..	Berhampur Krishnath College.
	,,	Kasinath	..	Gauhati Cotton College.
	,,	Kshitischandra	..	Bangabasi College.
	,,	Manindranath	..	Pabna Edward College.
	,,	Nanigopal	..	Bagerhat College.
	,,	Nanigopal	..	Bangabasi College.
	,,	Parimalchandra	..	Non-collegiate student (Faridpur Rajendra College).
190	,,	Praphullachandra	..	Comilla Victoria College.
	,,	Praphullakumar, II	..	Bangabasi College.
	,,	Prithwischandra	..	Rangpur Carmichael College.
	,,	Rabindranath	..	Bangabasi College.
	,,	Radhanath	..	St. Paul's College.
	,,	Ramanimohan	..	Scottish Church College.
	,,	Ramranjan	..	City College.
	,,	Sachindu	..	Non-collegiate student (Rajshahi College).
	,,	Sailendramohan	..	Faridpur Rajendra College.
	,,	Sailendranath	..	Bangabasi College.
200	,,	Sibapada	..	Ditto.
	,,	Sudhansubimal	..	Chittagong College.
	,,	Sudhirchandra	..	Mymensingh A. M. College.
	,,	Sudhirkumar	..	Bangabasi College.
	,,	Sukumar	..	Barisal Brajamohan College.
	,,	Sureschandra	..	Faridpur Rajendra College.
	,,	Tarapada	..	City College.
	,,	Umaprasanna	..	Rangpur Carmichael College.
	,,	Upendranath	..	Non-collegiate student (Barisal Brajamohan College).
	Chand, Trilok		..	Presidency College.
210	Chanda, Nagendranath		..	Ripon College.
	Chandy, Varghese		..	St. Xavier's College.
	Chandra, Jibankrishna		..	Howrah Narasinha Dutt College.
	,,	Kesablal	..	Ripon College.
	Kobiraj Changmai		..	Gauhati Cotton College.
	Chattopadhyay,	Amarendranath	..	Midnapur College.
	,,	Amulyaratan	..	Barisal Brajamohan College.
	,,	Amulchandra	..	Serampur College.
	,,	Asanath	..	Bangabasi College.
	,,	Aswinikumar	..	St. Xavier's College.
220	,,	Bhupendranath	..	Bangabasi College.
	,,	Bishnudas	..	Non-collegiate student (Rangpur Carmichael College).
	,,	Dhwajadhari	..	Berhampur Krishnath College.
	,,	Chunilal	..	Daulatpur Hindu Academy.
	,,	Dineschandra	..	St. Xavier's College.
	,,	Gopalchandra	..	Bangabasi College.
	,,	Hitendranath	..	Ditto.
	,,	Krishnananda	..	Ditto.
	,,	Krishnapada	..	Ditto.
	,,	Makhanlal	..	Berhampur Krishnath College.
230	,,	Mhakhanlal	..	Scottish Church College.
	,,	Manilal	..	St. Xavier's College.
	,,	Niranjankumar	..	Cooch-Behar Victoria College.
	,,	Nisikanta	..	City College.
	,,	Patakrishna	..	St. Xavier's College.
	,,	Praphullakumar	..	Bhowanipur Asutosh College.
	,,	Rabindranath	..	St. Xavier's College.
	,,	Ramchandra	..	Bankura Wesleyan College.
	,,	Saileschandra	..	Non-collegiate student (Comilla Victoria College).
	,,	Santimay	..	Hughli College.
240	,,	Satyendranath	..	Bangabasi College.
	,,	Sibapada	..	Ditto
	,,	Sibapada	..	St. Xavier's College.
	,,	Kasiswar	..	Vidyasagar College.
	,,	Tarapada	..	Bangabasi College.
	Chaudhuri,	Ajitkumar	..	Scottish Church College.
	,,	Asutosh	..	Non-collegiate student (Rangpur Carmichael College).
	,,	Banabihari	..	Non-collegiate student (Vidyasagar College).
	,,	Bimalchandra	..	Bhowanipur Asutosh College.
	,,	Bimalenduskekhar	..	Midnapur College.
250	,,	Dhirendrachandra	..	Comilla Victoria College.
	,,	Dilip	..	St. Xavier's College.
	,,	Dilipkumar	..	Uttarpara College.
	,,	Dhananjay	..	Mymensingh A. M. College.
	,,	Krishnendranarayan	..	City College.
	,,	Krishnapada	..	Bhowanipur Asutosh College.
	,,	Kshitindramohan	..	Ditto.
	,,	Nalinimohan	..	City College.
	,,	Naliniranjan	..	Comilla Victoria College.
	,,	Nanigopal	..	Vidyasagar College.
260	,,	Nirendranath	..	Bhowanipur Asutosh College.
	,,	Prasannachandra	..	Gauhati Cotton College.
	,,	Ratindrachandra	..	Mymensingh A. M. College.
	,,	Satyendranath	..	Bankura Wesleyan College.

	Dagra,	Sachindranath	.. Midnapur College.
	Das,	Aswinikumar	.. Rangpur Carmichael College.
	,,	Bansiram	.. Gauhati Cotton College.
	,,	Basantakumar	.. St. Xavier's College.
	,,	Bhabanicharan	.. Rangpur Carmichael College.
	,,	Bhadrakanta	.. Gauhati Cotton College.
270	,,	Bharatchandra	.. Ditto.
	,,	Bhupendrabinod	.. Non-collegiate student (Chittagong College).
	,,	Bijalibhushan	.. Bangabasi College.
	,,	Dadhinath	.. Cooch-Behar Victoria College.
	,,	Debendranath	.. Bangabasi College.
	,,	Dhananjay	.. Comilla Victoria College.
	,,	Durgapada	.. Chittagong College.
	,,	Gargeswar	.. Gauhati Cotton College.
	,,	Jatindrakumar	.. City College.
	,,	Jitendranath	.. Uttarpara College.
280	,,	Karunaranjan	.. City College.
	,,	Khagendrachandra	.. Rangpur Carmichael College.
	,,	Kshitischandra	.. City College.
	,,	Kumarkrishna	.. Scottish Church College.
	,,	Lakshmikanta	.. St. Paul's College.
	,,	Makhanlal	.. Ripon College.
	,,	Manindrachandra	.. Sylhet M. C. College.
	,,	Manindralal	.. Chittagong College.
	,,	Manindranath	.. Daulatpur Hindu Academy.
	,,	Nagendranath	.. Non-collegiate student (Gauhati Cotton College).
290	,,	Nibaranchandra	.. Non-collegiate student (Rajshahi College).
	,,	Nripendramohan	.. Mymensingh A. M. College.
	,,	Paresnath	.. Barisal Brajamohan College.
	,,	Punyabrata	.. City College.
	,,	Rabindranath	.. Bankura Wesleyan College.
	,,	Radharaman	.. Non-collegiate student (Comilla Victoria College).
	,,	Sachindranath	.. Non-collegiate student (Comilla Victoria College).
	,,	Sibnarayan	.. Howrah Narasinha Dutt College.
	,,	Sneharanjan	.. Mymensingh A. M. College.
	,,	Sudhirranjan	.. Ditto.
300	,,	Suryyakumar	.. Hughli College.
	Dasgupta,	Amulyaranjan	.. City College.
	,,	Asitaranjan	.. Barisal Brajamohan College.
	,,	Bhabaniprasad	.. City College.
	,,	Binayendranath	.. Non-collegiate student (Rajshahi College).
	,,	Bireschandra	.. Barisal Brajamohan College.
	,,	Dibyendukanti	.. Daulatpur Hindu Academy.
	,,	Gobindalal	.. Non-collegiate student (Faridpur Rajendra College).
	,,	Gopalchandra	.. Comilla Victoria College.
	,,	Jayantakumar	.. Barisal Brajamohan College.
310	,,	Nanigopal	.. Bangbasi College.
	,,	Narendranath	.. Barisal Brajamohan College.
	,,	Naroschandra	.. Bangabasi College.
	,,	Nirmalchandra	.. Daulatpur Hindu Academy.
	,,	Niradbihari	.. Bangabasi College.
	,,	Raneskumar	.. Non-collegiate student (City College).
	,,	Sachindrachandra	.. St. Paul's College.
	,,	Sachindranath	.. Scottish Church College.
	,,	Saileschandra	.. Non-collegiate student (Pabna Edward College).
	,,	Sarojendukumar	.. Mymensingh A. M. College.
320	,,	Ullaskar	.. Cooch-Behar Victoria College.
	,,	Upendranath	.. Bangabasi College.
	Datta,	Ardhendukumar	.. Presidency College.
	,,	Dauleswar	.. St. Xavier's College.
	,,	Dulalchand	.. Bhowanipur Asutosh College.
	,,	Hiralal	.. Presidency College.
	,,	Jadupati	.. Berhampur Krishnath College.
	,,	Kalpana	.. Non-collegiate student (Bethune College).
	,,	Kamalkrishna	.. Non-collegiate student (Serampur College).
	,,	Kanailal, II	.. Bangabasi College.
330	,,	Krishnananda	.. Ditto.
	,,	Madanmohan	.. Scottish Church College.
	,,	Manomohan	.. Comilla Victoria College.
	,,	Milanchand	.. Scottish Church College.
	,,	Nirmalkumar	.. Ditto.
	,,	Padmakanta	.. Cooch-Behar Victoria College.
	,,	Phakirchandra	.. Bangabasi College.
	,,	Phanindranath	.. Ditto.
	,,	Prabodhkumar	.. Daulatpur Hindu Academy.
	,,	Praphullakumar	.. Bangabasi College.
340	,,	Rabindranath	.. Vidyasagar College.
	,,	Radhikaprasad	.. Non-collegiate student (Daulatpur Hindu Academy).

	Datta,	Ratanlal	.. Non-collegiate student (Hughli College).
	,,	Sasadhar	.. Non-collegiate student (Comilla Victoria College).
	,,	Somendranath	.. City College.
	,,	Sudhirkumar	.. Hughli College.
	,,	Sudhirkumar	.. Non-collegiate student (Comilla Victoria College).
	,,	Sudhirranjan	.. Presidency College.
	,,	Susilchandra	.. Non-collegiate student (Comilla Victoria College).
	,,	Tarakdas	.. City College.
350	,,	Umeschandra	.. Non-collegiate student (Comilla Victoria College),
	Dattagupta,	Surendrakumar	.. Presidency College.
	Dattaray,	Apurbakanchan	.. Non-collegiate student (Comilla Victoria College).
	,,	Birendrakrishna	.. Sylhet M. C. College.
	,,	Manindrakisor	.. Mymensingh A. M. College.
	Dawooder	Rahman	.. Islamia College.
	De,	Ajitkumar	.. Vidyasagar College.
	,,	Balailal	.. Uttarpara College.
	,,	Janardanchandra	.. Bangabasi College.
	,,	Lalita	.. Bethune College.
360	,,	Ramanath	.. City College.
	,,	Rameschandra	.. Non-collegiate student (Comilla Victoria College).
	,,	Ramkrishna	.. Ripon College.
	,,	Saradindusekhar	.. Rangpur Carmichael College.
	,,	Tinkari	.. Bangabasi College.
	Deb,	Debendranarayan	.. Presidency College.
	,,	Prabirendrakrishna	.. Non-collegiate student (Presidency College).
	,,	Subodhkumar	.. Sylhet M. C. College.
	Debbardhan,	Akhilchandra	.. Comilla Victoria College.
	Debgoswami,	Krishnakanta	.. Gauhati Cotton College.
370	Deb,	Kumar Hemantanarayan	.. Non-collegiate student (Cooch-Behar Victoria College).
	Debi,	Nirmala	.. Bethune College.
	Debray,	Nirmalchandra	.. Daulatpur Hindu Academy.
	,,	Pabitrakumar	.. Bangabasi College.
	Deuri,	Basantakumar	.. Gauhati Cotton College.
	,,	Dandiram	.. Non-collegiate student (Gauhati Cotton College).
	Dhar,	Pasupati	.. Berhampur Krishnath College.
	,,	Sukumar	.. Sylhet M. C. College.
	Dharchaudhuri,	Praphullakumar	.. Comilla Victoria College.
	Duara,	Hemendraprasad	.. Gauhati Cotton College.
380	Endaw,	Sunilmohan	.. Non-collegiate student (Bangabasi College).
	Erfan Ulla	Talukdar	.. Islamia College.
	Gangopadhyay,	Anadibandhu	.. Non-collegiate student (Rajshahi College).
	,,	Binaybhushan	.. Krishnagar College.
	,,	Chandicharan	.. Non-collegiate student (Ripon College).
	,,	Himansubhushan	.. St. Paul's College.
	,,	Jajneswar	.. Rangpur Carmichael College.
	,,	Jayram	.. Bhowanipur Asutosh College.
	,,	Kalyankumar	.. St. Paul's College.
	,,	Praphullachandra	.. Non-collegiate student (Rajshahi College).
390	,,	Sachindranath	.. Daulatpur Hindu Academy.
	,,	Sanatkumar	.. Howrah Narasinha Dutt College.
	,,	Sukumar	.. Vidyasagar College.
	Gautam,	Saralkumar	.. Non-collegiate student (Rajshahi College).
	Ghatak,	Bansidhar	.. Bankura Wesleyan College.
	,,	Bireswar	.. Rangpur Carmichael College.
	,,	Jagadischandra	.. Mymensingh A. M. College.
	Ghosh,	Abanikumar	.. Bhowanipur Asutosh College.
	,,	Adityanath	.. Berhampur Krishnath College.
	,,	Ajitkumar	.. St. Xavier's College.
400	,,	Amalkumar	.. Bhowanipur Asutosh College.
	,,	Anauprakas	.. City College.
	,,	Aswinikumar	.. Non-collegiate student (Rajshahi College).
	,,	Bankimchandra	.. Bangabasi College.
	,,	Bhaktakumar	.. Presidency College.
	,,	Bhupeschandra	.. Comilla Victoria College.
	,,	Bidhuranjan	.. City College.
	,,	Bimalkumar	.. Bhowanipur Asutosh College.
	,,	Binaybhushan	.. Comilla Victoria College.
	,,	Binodbihari	.. Ripon College.
410	,,	Birendrachandra	.. Rangpur Carmichael College.
	,,	Birendranath	.. Daulatpur Hindu Academy.
	,,	Chittaranjan	.. Non-collegiate student (St. Paul's College).
	,,	Gopalchandra	.. Bangabasi College.
	,,	Hemendranath	.. Scottish Church College.
	,,	Himansusekhar	.. Bhowanipur Asutosh College.
	,,	Hirachur	.. City College.
	,,	Jitendranath	.. Bhowanipur Asutosh College.

	Ghosh, Jitendranath, II	.. Bangabasi College.
	,, Jogendranath	.. Barisal Brajamohan College.
420	,, Jogendranath	.. St. Xavier's College.
	,, Jugalpada	.. Krishnagar College.
	,, Jyotinath	.. St. Xavier's College.
	,, Kamalapati	.. Berhampur Krishnath College.
	,, Kantichandra	.. Serampur College.
	,, Lokendranath	.. Non-collegiate student (Presidency College).
	,, Mahimchandra	.. Non-collegiate student (Rajshahi College).
	,, Manindrachandra	.. Mymensingh A. M. College.
	,, Manoranjan	.. Bangabasi College.
	,, Manoranjan	.. Comilla Victoria College.
430	,, Narendrakumar	.. Non-collegiate student (Daulatpur Hindu Academy).
	,, Nilkanta	.. Daulatpur Hindu Academy.
	,, Niranjan	.. Mymensingh A. M. College.
	,, Prabhatchandra	.. Vidyasagar College.
	,, Prabodhkumar	.. Rangpur Carmichael College.
	,, Praphullakumar	.. Howrah Narasinha Dutt College.
	,, Rabindranath	.. Hughli College.
	,, Sachindraprasad	.. City College.
	,, Sailen	.. Scottish Church College.
	,, Santipriya	.. Howrah Narasinha Dutt College.
440	,, Santoshkumar, II	.. City College.
	,, Sarojkumar	.. Bhowanipur Asutosh College.
	,, Sasankasekhar	.. Bangabasi College.
	,, Satyasadhan	.. Scottish Church College.
	,, Sudhirkumar, I	.. City College.
	,, Sunilkumar	.. Bangabasi College.
	,, Sunilkumar	.. Berhampur Krishnath College.
	Ghoshal, Bimalakanta	.. Presidency College.
	,, Dulalchandra	.. Bangabasi College.
	Ghoshdastidar, Sukumar	.. Barisal Brajamohan College.
450	Gomes, Eric	.. St. Joseph's College.
	Goswami, Jitendragiri	.. Non-collegiate student (Rajshahi College).
	,, Kalikrishna	.. Bangabasi College.
	,, Mohitranjan	.. Howrah Narasinha Dutt College.
	,, Sachindranath	.. Bangabasi College.
	Guha, Bimalchandra	.. Comilla Victoria College.
	,, Chittaranjan	.. Chittagong College.
	,, Jyotsnamay	.. Rangpur Carmichael College.
	Guhabiswas, Asitaranjan	.. Barisal Brajamohan College.
	Guhaniyogi, Sisirkumar	.. St. Xavier's College.
460	Guhathakurta, Dhirendranath	.. Daulatpur Hindu Academy.
	Gupta, Ajitchandra	.. St. Xavier's College.
	,, Amiyamadhab	.. Sylhet M. C. College.
	,, Asitkumar	.. City College.
	,, Brajendranath	.. Scottish Church College.
	,, Madhusudan	.. Vidyasagar College.
	,, Narendranath	.. Barisal Brajamohan College.
	,, Santiranjan	.. Non-collegiate student (City College).
	,, Susilkumar	.. City College.
	Habibar Rahman	.. Faridpur Rajendra College.
470	Habibur Rahman	.. Gauhati Cotton College.
	Hafizar Rahaman Sircar	.. Non-collegiate student (Rajshahi College).
	Hajra, Amarnath	.. Bangabasi College.
	,, Gobindachandra	.. Ditto.
	,, Jatindranath	.. Howrah Narasinha Dutt College.
	Haldar, Lokeschandra	.. Bangabasi College.
	Hewlett Singh Pariat	.. Scottish Church College.
	Hogg, Cyril Mc Arthur	.. Non-collegiate student (Roll Cal. N. 194).
	Jacob, John	.. St. Xavier's College.
	Jana, Jnanananda	.. Midnapur College.
480	Jena, Batahari	.. Ditto.
	Kabiruddin Ahmad	.. Chittagong College.
	Kanjilal, Haripada	.. Vidyasagar College.
	Kar, Janakinath	.. Comilla Victoria College.
	,, Niranjan	.. Mymensingh A. M. College.
	Karim Boksha Mondal	.. Non-collegiate student (Rajshahi College).
	Karmakar, Kiranchandra	.. Barisal Brajamohan College.
	Kaul, Littlemohan	.. City College.
	Kazi Mohammed Saifullah	.. St. Xavier's College.
	Kazi Shams-ul Alam	.. Non-collegiate student (Rajshahi College).
490	Khan, Saurindrakumar	.. City College.
	Khandkar, Sultanal Alam	.. Krishnagar College.
	Khanrah, Sudhirchandra	.. Midnapur College.
	Khondkar Najmul Huda	.. Berhampur Krishnath College.
	Kowar, Sanatkumar	.. City College.
	Kunda, Amritalal	.. Bangabasi College.
	Kundu, Adhirkumar	.. Berhampur Krishnath College.
	,, Debendramohan	.. Bangabasi College.
	,, Haranchandra	.. Non-collegiate student (Rajshahi College).
	,, Nalinikanta	.. City College.

500	Kundu, Nityagopal	..	Non-collegiate student (Cooch-Behar Victoria College).
	„ Syamapada	..	Non-collegiate student (Pabna Edward College).
	Laha, Sudhansubhushan	..	City College.
	Lahiri, Binaybhushan	..	Bangabasi College.
	„ Girindranath	..	Cooch-Behar Victoria College.
	„ Khagtschandra	..	Non-collegito student (Rajshahi College).
	„ Somnath	..	City College.
	Leonard Pasang Tshiring Rongong	..	Scottish Church College.
	Lyon, Chow Young	..	St. Xavier's College.
	M. Ensan Ali	..	Ditto.
510	M. Md. Bozlor Rahman	..	Bangabasi College.
	Maiti, Nikunjabihari	..	Midnapur College.
	„ Rajpati	..	Ditto.
	Maitra, Amitabha	..	Bangabasi College.
	„ Brajendranath	..	Non-collegiate student (Pabna Edward College).
	„ Ramkrishna	..	Rangpur Carmichael College.
	„ Saktidas	..	Pabna Edward College.
	Majumdar Abanikanta	..	Ditto.
	„ Baradakanta	..	Comilla Victoria College.
	„ Bhupatiranjan	..	Bankura Wesleyan College.
520	„ Bimalendu	..	City College.
	„ Birajaprasanna	..	Comilla Victoria College.
	„ Hiralal	..	Ditto.
	„ Harendralal	..	Daulatpur Hindu Academy.
	„ Jogeschandra	..	Bhowanipur Asutosh College.
	„ Kamalkrishna	..	Ditto.
	„ Makhanlal	..	Mymensingh A. M. College.
	„ Narayanchadra	..	Scottish Church College.
	„ Radhasyam	..	Bankura Wesleyan College.
	„ Rohinikumar	..	Non-collegiate student (Comilla Victoria College).
530	„ Santigopal	..	Bhowanipur Asutosh College.
	„ Sarojkumar	..	Ripon College.
	Makaddas Ali	..	Sylhet M. C. College.
	Mallik, Gopalchandra	..	Vidyasagar College.
	„ Pramathanath	..	Berhampur Krishnath College.
	„ Rajendranath	..	Non-collegiate student (Hughli College).
	Mandal, Dharanidhar	..	Bankura Wesleyan College.
	„ Gaurisankar	..	St. Xavier's College.
	„ Harendranath	..	Bhowanipur Asutosh College.
	„ Sailendranath	..	Non-collegiate student (Vidyasagar College).
540	„ Sudhirkumar	..	Non-collegiate student (Berhampur Krishnath College.)
	Manna, Bidhubhushan	..	Midnapur College.
	Mansur Ahmed	..	Presidency College.
	Maruff Allan P.	..	Non-collegiate student (Roll Cal. N. 164).
	Maulik, Matilal	..	Barisal Brajamohan College.
	Mayin Uddin Talukder	..	Pabna Edward College.
	Md. Abdul Matin	..	Non-collegiate student (Islamia College).
	Md. Abul Hossain	..	Mymensingh A. M. College.
	Md. Asad Ali Khan	..	Non-collegiate student (Rajshahi College).
	Md. Hashem Mollah	..	Islamia College.
550	Md. Ishahaque Talukder	..	Comilla Victoria College.
	Md. Lutfor Rahman	..	Bangabasi College.
	Md. Nural Haque Mia	..	Pabna Edward College.
	Md. Reaz Uddin	..	Mymensingh A. M. College.
	Md. Shamsher Ali Khan	..	Rangpur Carmichael College.
	Mirza Rayan Beg	..	Islamia College.
	Misra, Chittaranjan	..	Scottish Church College.
	„ Muralidhar	..	Non-collegiate student (Vidyasagar College).
	Mitra, Anantakumar	..	Daulatpur Hindu Academy.
	„ Anilkumar	..	St. Xavier's College.
560	„ Anilkumar	..	Vidyasagar College.
	„ Barindrakumar	..	Krishnagar College.
	„ Hirankumar	..	Bangabasi College.
	„ Jagadananda	..	Midnapur College.
	„ Jagadindranath	..	Non-collegiate student (Comilla Victoria College).
	„ Jatindramohan	..	Faridpur Rajendra College.
	„ Kalyanananda	..	St. Paul's College.
	„ Manibhushan	..	Bangabasi College.
	„ Manmathachandra	..	Scottish Church College.
	„ Nirmalkumar	..	Ripon College.
570	„ Ramendranath	..	Pabna Edward College.
	„ Sachindranath	..	Scottish Church College.
	„ Sarojkumar	..	City College
	„ Sasankasekhar	..	Bangabasi College.
	„ Sisirkumar	..	Scottish Church College.
	„ Sudhansuboran	..	Ditto.
	„ Sudhansukumar, I	..	Bangabasi College.
	„ Taracharan	..	Midnapur College.

	Modak, Murarimohan	.. Non-collegiate student (Krishnagar College).
	„ Sitanath	.. Comilla Victoria College.
580	Mohamad Niamul Mowla	.. Bankura Wesleyan College.
	Mohammad Aftab Uddin Biswas	.. Berhampur Krishnath College.
	Mohammad Taslim Uddin	.. Rangpur Carmichael College.
	Mohammed Ishaque	.. Chittagong College.
	Mukhopadhyay, Anantakumar	.. Non-collegiate student (Bagerhat College).
	„ Anilchandra	.. Vidyasagar College.
	„ Anilkumar	.. Bhowanipur Asutosh College.
	„ Anilkumar	.. St. Xavier's College.
	„ Baidyanath	.. Krishnagar College.
	„ Bhabanicharan	.. Bhowanipur Asutosh College.
590	„ Bhupendranath	.. Bangabasi College.
	„ Bhutnath	.. Ditto.
	„ Bibhutibhushan	.. Ripon College.
	„ Binaybhushan	.. Hughli College.
	„ Binaybhushan	.. Non-collegiate student (Mymensingh A. M. College).
	„ Gopalchandra	.. Non-collegiate student (City College).
	„ Harikumar	.. Non-collegiate student (Barisal Brajamohan College).
	„ Hiralal	.. Ripon College.
	„ Kamalakanta	.. Bangabasi College.
	„ Kartikchandra	.. Ditto.
600	„ Muktidaranjan	.. Bankura Wesleyan College.
	„ Narayanranjan	.. Barisal Brajamohan College.
	„ Nirmalchandra	.. Non-collegiate student (Presidency College).
	„ Nripendranath	.. Vidyasagar College.
	„ Prabhatkumar	.. St. Paul's College.
	„ Pramathanath	.. Narail Victoria College.
	„ Sambhudas	.. Berhampur Krishnath College.
	„ Sambhuprasad	.. St. Xavier's College.
	„ Santoshkumar	.. Bhowanipur Asutosh College.
	„ Saradindu	.. Hugli College.
610	„ Satyasri	.. Ripon College.
	„ Srischandra	.. Non-collegiate student (Presidency College).
	„ Subodhchandra	.. Bankura Wesleyan College.
	„ Sudhansukumar	.. Bangabasi College.
	„ Sudhansukumar	.. Serampur College.
	„ Sudhindranath	.. Faridpur Rajendra College.
	„ Sudhirkisor	.. St. Xavier's College.
	„ Sureschandra	.. Bhowanipur Asutosh College.
	„ Swarnarenu	.. Comilla Victoria College.
	„ Tapanbilas	.. Faridpur Rajendra College.
620	Multomesur Rahman Choudhury	.. Sylhet M. C. College.
	Nag, Bibhutibhushan	.. City College.
	„ Rabindrakumar	.. Bangabasi College.
	Nandi, Chandranath	.. Comilla Victoria College.
	„ Dilipkumar	.. Sylhet M. C. College.
	„ Himansusekhar	.. St. Xavier's College.
	„ Panchanan	.. Bangabasi College.
	„ Parameschandra	.. Hughli College.
	„ Radhikaranjan	.. City College.
	„ Sunilkanta	.. Non-collegiate student (Pabna Edward College).
630	Narayanchaudhuri, Sukumarchandra	.. Non-collegiate student (Comilla Victoria College).
	Nath, Nikunjaranjan	.. Barisal Brajamohan College.
	„ Ramendrasundar	.. Krishnagar College.
	„ Santisekhar	.. Bangabasi College.
	Pain, Kisorimohan	.. Ditto.
	Pal, Bijaykrishna	.. Scottish Church College.
	„ Birendrakumar	.. Barisal Brajamohan College.
	„ Dhirendrakumar	.. Non-collegiate student (Chittagong College).
	„ Gopalchandra	.. St. Paul's College.
	„ Makhanlal	.. Non-collegiate student (Comilla Victoria College).
640	„ Manindranath	.. Non-collegiate student (Pabna Edward College).
	„ Niharranjan	.. Mymensingh A. M. College.
	„ Nripendramohan	.. Bangabasi College.
	„ Prabhaschandra	.. Ditto.
	„ Santoshkumar, I	.. Ditto.
	„ Santoshkumar	.. Non-collegiate student (Ripon College).
	„ Sukumar	.. Barisal Brajamohan College.
	„ Tarapada	.. Bangabasi College.
	Palchaudhuri, Kartikchandra	.. Howrah Narasinha Dutt College.
	Parui, Jaminibhushan	.. Bangabasi College.
650	Poddar, Narendranath	.. City College.
	„ Sudhirchandra	.. Ditto.
	Pramanik, Gopalgobinda	.. Non-collegiate student (Rajshahi College.)
	„ Kalipada	.. Bankura Wesleyan College.
	„ Meghnath	.. Bangabasi College.
	„ Ramapada	.. Berhampur Krishnath College.

	Purkait, Bidhubhushan	.. Bangabasi College.
	Raha, Susilkumar	.. Barisal Brajamohan College.
	Rajak, Bhaktapada	.. Berhampur Krishnath College.
	Rakshit, Ajitkumar	.. Bangabasi College.
660	„ Murarimohan	.. Non-collegiate student (Scottish Church College).
	Rameshwar Singh	.. Non-collegiate student (Bangabasi College).
	Ray, Abhimanyu	.. Sylhet M. C. College.
	„ Ajaykumar	.. Ripon College.
	„ Ajitkumar	.. Non-collegiate student (Bangabasi College).
	„ Amarendra	.. Bankura Wesleyan College.
	„ Amarendranath	.. Daulatpur Hindu Academy.
	„ Amulyachandra	.. Rangpur Carmichael College.
	„ Barunananda	.. Non-collegiate student (Pabna Edward College).
	„ Bhaboschandra	.. Bangabasi College.
670	„ Bidhubhushan	.. Cooch Behar Victoria College.
	„ Chandidas	.. Bangabasi College.
	„ Goshthabihari	.. Bhowanipur Asutosh College.
	„ Harimohan	.. City College.
	„ Harisankar	.. Non-collegiate student (Bangabasi College).
	„ Hirendranath	.. Bangabasi College.
	„ Jitendramohan	.. City College.
	„ Kamalaranjan	.. Non-collegiate student (Krishnagar College).
	„ Kamalchandra	.. Bankura Wesleyan College.
	„ Khagendranath	.. Bangabasi College.
680	„ Kirtischandra	.. Mymensingh A. M. College.
	„ Lalmohan	.. Berhampur Krishnath College.
	„ Manojmohan	.. Bankura Wesleyan College.
	„ Manomohan	.. Bhowanipur Asutosh College.
	„ Manoranjan	.. Daulatpur Hindu Academy.
	„ Nagendrakumar	.. Mymensingh A. M. College.
	„ Narayanchandra	.. Rangpur Carmichael College.
	„ Nripendranarayan	.. City College.
	„ Pradyotkumar	.. Midnapur College.
	„ Radhaballabh	.. St. Xavier's College.
690	„ Radhapada	.. Berhampur Krishnath College.
	„ Radhasyam	.. Non-collegiate student (Rajshahi College).
	„ Ramanimohan, I	.. Bangabasi College.
	„ Ramendrasundar	.. Pabna Edward College.
	„ Ramnarayan	.. Bankura Wesleyan College.
	„ Sachindranath	.. Midnapur College.
	„ Sarojkumar	.. Serampur College.
	„ Satadal	.. Bangabasi College.
	„ Satiprasanna	.. Ditto.
	„ Satyendrakumar	.. Scottish Church College.
700	„ Satyendrakumar	.. Berhampur Krishnath College.
	„ Satyendranath	.. Rangpur Carmichael College.
	„ Sudhansukumar	.. City College.
	„ Sukumar	.. Comilla Victoria College.
	„ Susilchandra	.. Ripon College.
	„ Susital	.. Ditto.
	„ Tarapada	.. Serampur College.
	„ Tirtheswaran	.. Non-collegiate student (Rajshahi College).
	„ Upendranarayan	.. Comilla Victoria College.
	Raybiswas, Harendranath	.. Non-collegiate student (Daulatpur Hindu Academy).
710	Raychaudhuri, Amulyaranjan	.. Berhampur Krishnath College.
	„ Hirendranath	.. St. Xavier's College.
	„ Madanmohan	.. Howrah Narasinha Dutt College.
	„ Nisithranjan	.. Scottish Church College.
	„ Parimalkanti	.. Mymensingh A. M. College.
	„ Phanindranath	.. Barisal Brajamohan College.
	„ Rabindranath	.. Ditto.
	„ Sudhansukumar	.. Cooch Behar Victoria College.
	Raye, Thomas S.	.. St. Xavier's College.
	Raymajumdar, Nandalal	.. Sylhet M. C. College.
720	Raysardar, Surajitkumar	.. Bangabasi College.
	Roajesh Ali Joarder	.. Islamia College.
	Rudra, Niharbindu	.. Comilla Victoria College.
	Saha, Abhayacharan	.. Cooch Behar Victoria College.
	„ Asokkumar	.. St. Xavier's College.
	„ Bidhubhushan	.. City College.
	„ Gaurchandra	.. Ditto.
	„ Gobindalal	.. Berhampur Krishnath College.
	„ Gopiballabh	.. Bangabasi College.
	„ Madanmohan	.. Ditto.
730	„ Nakulchandra	.. Daulatpur Hindu Academy.
	„ Nijulal	.. Berhampur Krishnath College.
	„ Radhagobinda	.. Scottish Church College.
	„ Raiharan	.. City College.
	„ Rebatimohan	.. Comilla Victoria College.
	„ Sanatkumar	.. Vidyasagar College.
	„ Santoshkumar	.. Cooch Behar Victoria College.
	„ Sudhansusekhar	.. St. Xavier's College.
	„ Suprakasnarayan	.. Non-collegiate student (Rajshahi College).

	Saha, Sureschandra	..	Non-collegiate student (Pabna Edward College).
740	,, Barindranath	..	Bangabasi College.
	Sajjad Ali	..	Sylhet M. C. College.
	Samanta, Bhimacharan	..	Midnapur College.
	Sambhubihari Lal Agorwala	..	Non-collegiate student (Rajshahi College).
	Sanmugrahi, Binodbihari	..	Bankura Wesleyan College.
	Sanyal, Asitkumar	..	Rangpur Carmichael College.
	,, Bireschandra	..	Ditto.
	,, Jyotirbhushan	..	Cooch Behar Victoria College.
	,, Sachindrasaran	..	Non-collegiate student (Rajshahi College).
	Sarbadhyaksha, Sibendrasankar	..	Cooch Behar Victoria College.
750	Sarkar, Ahibhushan	..	Bangabasi College.
	,, Ajitkumar	..	Presidency College.
	,, Atulprasanna	..	Barisal Brajamohan College.
	,, Bireschandra	..	Non-collegiate student (Rajshahi College).
	,, Debendranath	..	Bankura Wesleyan College.
	,, Himansukumar	..	Scottish Church College.
	,, Hitendranath	..	Bangabasi College.
	,, Jagatjitkumar	..	Non-collegiate student (City College).
	,, Krishnadhan	..	St. Xavier's College.
	,, Niranjankumar, II	..	Bangabasi College.
760	,, Ramaratan	..	Ditto.
	,, Santoshkumar	..	Bankura Wesleyan College.
	,, Saratchandra	..	Non-collegiate student (Rajshahi College).
	,, Sudhirkanti	..	Chittagong College.
	,, Surendraranjan	..	Presidency College.
	,, Sureschandra	..	Rangpur Carmichael College.
	,, Tarapada	..	Daulatpur Hindu Academy.
	Sarkhel, Narayanchandra	..	Ditto.
	Sarmaberthakur, Radhanath	..	Gauhati Cotton College.
	Sen, Ajitkumar	..	Mymensingh A. M. College.
770	,, Ardhendubikas	..	Chittagong College.
	,, Aruncchandra	.	Barisal Brajamohan College.
	,, Asoknath	..	Presidency College.
	,, Atulkrishna	..	Scottish Church College.
	,, Bhabaranjan	..	Barisal Brajamohan College.
	,, Bimalchandra	..	Mymensingh A. M. College.
	,, Bimalendusekhar	..	Non-collegiate student (Vidyasagar College).
	,, Binayendranath	..	Cooch-Behar Victoria College.
	,, Biswanath	..	Scottish Church College.
	,, Haritosh	..	St. Paul's College.
780	,, Jayantimohan	..	Hughli College.
	,, Jogendranath	..	Chittagong College.
	,, Kiranchandra	..	Cooch-Behar Victoria College.
	,, Kiranendranath	..	Non-collegiate student (Rajshahi College).
	,, Matilal	..	Comilla Victoria College.
	,, Nanibala	..	Non-collegiate student (Roll Chi. F. N. 1).
	,, Nirmalchandra	..	Faridpur Rajendra College.
	,, Panchkari	..	Bangabasi College.
	,, Parimalchandra	..	Cooch-Behar Victoria College.
	,, Pritischandra	..	Faridpur Rajendra College.
790	,, Ramendranath	..	Presidency College.
	,, Rebatimohan	..	Non-collegiate student (Faridpur Rajendra College).
	,, Sachindrakrishna	..	City College.
	,, Santibhushan	..	Ditto.
	,, Sarojkumar	..	Bangabasi College.
	,, Subrata	..	Scottish Church College.
	,, Sukharanjan	..	Mymensingh A. M. College.
	,, Sumana	..	Bethune College.
	Senchaudhuri, Kshitischandra	..	Comilla Victoria College.
	Sengupta, Amalansu	..	Barisal Brajamohan College.
800	,, Bhabaniprasad	..	Berhampur Krishnath College.
	,, Bimalendu	..	Non-collegiate student (Bangabasi College).
	,, Binanbihari	..	Non-collegiate student (City College).
	,, Binaybhushan	..	Non-collegiate student, (Pabna Edward College).
	,, Chandrasekhar	..	Midnapur College.
	,, Dhirendrachandra	..	Bhowanipur Asutosh College.
	,, Gopalchandra	..	Non-collegiate student (Bangabasi College).
	,, Gopikaraman	.	Comilla Victoria College.
	,, Hirendranath	.	Barisal Brajamohan College.
	,, Kamalendu	.	Presidency College.
810	,, Matindralal	.	Scottish Church College.
	,, Nrisinhaprasad	..	Ditto.
	,, Prankumar	..	Midnapur College.
	,, Rabindrachandra	..	Non-collegiate student (Daulatpur Hindu Academy).
	,, Satisranjan	..	Barisal Brajamohan College.
	,, Satyabrata	..	Non-collegiate student (Comilla Victoria College).

	Sengupta, Sudhindranath	..	Bankura Wesleyan College.
	„ Sudhirkumar	..	St. Xavier's College.
	Senguptakabiraj, Rashihari	..	Bankura Wesleyan College.
	Seal, Nirendrakumar	..	Bangabasi College.
820	Sekendar Khan	..	Comilla Victoria College.
	Set, Ajitkumar	..	City College.
	Shaikh Serajul Haque	..	Islamia College.
	Sambhu Narain Rai	..	City College.
	Gangaprasad Shawo	..	Bangabasi College.
	Showkatuddin Md. Mannour	..	Non-collegiate student (Islamia College).
	Siddhanta, Sukumar	..	City College.
	Sikandar Ali	..	Sylhet M. C. College.
	Sil, Gadadhar	..	Bangabasi College.
	„ Prabhatranjan	..	Scottish Church College.
830	Sinha, Ajitkumar	..	City College.
	„ Akhilendranarayan	..	Ditto.
	„ Binaykumar	..	Berhampur Krishnath College.
	„ Dhrubanarayan	..	St. Paul's College.
	„ Gaurisankar	..	City College.
	„ Gopijanaballabh	..	Vidyasagar College.
	„ Kalidas	..	City College.
	„ Prantosh	..	Bangabasi College.
	„ Ranjitkumar	..	Midnapur College.
	„ Sachindramohan	..	Pabna Edward College.
840	Smith, Albert	..	St. Xavier's College.
	Sk. Abdul Ghani	..	Islamia College.
	Sk. Abdur Rahman	..	Bangabasi College.
	Sur, Jaminimohan	..	Comilla Victoria College.
	Syed Md. Taiyeb	..	Ripon College.
	Syed Shafaat Ali	..	City College.
	Syed Wakib Ahmad Jafferey	..	Ripon College.
	Taiab Hassen Bashunia	..	Cooch-Behar Victoria College.
	Tajuddin Ahamed	..	Faridpur Rajendra College.
	Talapatra, Haramani	..	Bangabasi College.
850	Talukdar, Balaram	..	Gauhati Cotton College.
	Tashm Uddin Ahmed	..	Islamia College.
	Tewari, Makhanlal	..	Non-collegiate student (Mymensingh A. M. College).
	Thokchom Nilmoni Sinha	..	Sylhet M. C. College.
	Tafazzal Hossain Choudhury	..	Chittagong College.
	Tokedar, Nirmalkumar	..	Non-collegiate student (Rajshahi College).
856	Wadadar, Hariranjan	..	Chittagong College.

THIRD DIVISION.

(Arranged in alphabetical order.)

	Abdus Sobur Khan	..	Presidency College.
	Abul Quasem	..	Comilla Victoria College.
	Acharyya, Makhanlal	..	City College.
	„ Phanindranath	..	Non-collegiate student (Rajshahi College).
	„ Sasankasekhar	..	Bankura Wesleyan College.
	Adhikari, Dhirendralal	..	Comilla Victoria College.
	Anthony, F. W.	..	Non-collegiate student (St. Xavier's College).
	A. Q. Shahabuddin Ahmad	..	Ripon College.
	Bandyopadhyay, Anilkumar	..	St. Paul's College.
10	„ Bishnusakha	..	Bhowanipur Asutosh College.
	„ Lokendrachandra	..	Cooch-Behar Victoria College.
	„ Mahadebchandra	..	Bangabasi College.
	„ Nanigopal, I	..	Ditto.
	„ Panchugopal	..	City College.
	„ Pradyotkumar	..	Non-collegiate student (Krishnagar College).
	„ Purnachandra	..	Ditto.
	„ Purnendu, I	..	Bangabasi College.
	„ Rajkrishna	..	Scottish Church College.
	„ Sunilkumar	..	City College.
20	„ Surendranath	..	Scottish Church College.
	„ Umapada	..	Non-collegiate student (Daulatpur Hindu Academy).
	Barari, Priyatosh	..	Mymensingh A. M. College.
	Bardhan, Gaurchandra	..	Bangabasi College.
	Barkakati, Padmadhar	..	St. Paul's College.
	Basu, Girindrakumar	..	Bangabasi College.
	„ Jitendranath	..	Presidency College.
	„ Narendranath	..	Non-collegiate student (Rajshahi College).
	„ Ramasankar	..	Bangabasi College.
	„ Saileswarprasad	..	Scottish Church College.
30	„ Sakhanath	..	Non-collegiate student (Barisal Brajamohan College).
	„ Santoshkumar	..	Bangabasi College.
	„ Somendramohan	..	City College.
	„ Sudhirkumar	..	Non-collegiate student (Rajshahi College).
	„ Sukomalchandra	..	Non-collegiate student (Bangabasi College).

	Bhattacharyya,	Batakrishna	.. Bangabasi College.
	,,	Brajendrasundar	.. Hugli College.
	,,	Hemchandra	.. Barisal Brajamohan College.
	,,	Jnanendranath	.. Mymensingh A. M. College.
	,,	Kasinath	.. Vidyasagar College.
40	,,	Manujendranath	.. Ripon College.
	,,	Narayanchandra	.. Non-collegiate student (Narail Victoria College).
	,,	Narendranath	.. Bangabasi College.
	,,	Paritoshkumar	.. Presidency College.
	Bhaumik,	Dhirendrakisor	.. Mymensingh A. M. College.
	,,	Tarakeswar	.. City College.
	Bhunia,	Panchanan	.. Bangabasi College.
	Biswas,	Jaminibhushan	.. Ditto.
	Chaki,	Pramodkumar	.. Non-collegiate student (Krishnanagar College).
	Chakrabarti,	Amalendu	.. Gauhati Cotton College.
50	,,	Baridkumar	.. Bangabasi College.
	,,	Birendrachandra	.. Ditto.
	,,	Haroram	.. Non-collegiate student (Pabna Edward College).
	,,	Jagadiswar	.. Non-collegiate student (Daulatpur Hindu Academy).
	,,	Japendrakrishna	.. City College.
	,,	Jitendrachandra	.. Mymensingh A. M. College.
	,,	Maniklal	.. Ditto.
	,,	Nilkanta	.. St. Paul's College.
	,,	Praphullakumar, I	.. Bangabasi College.
	,,	Pratulkisor	.. Bhowanipur Asutosh College.
60	,,	Rajatprasad	.. Howrah Narasinha Dutt College.
	,,	Rameschandra	.. City College.
	,,	Sachindrakumar	.. Daulatpur Hindu Academy.
	,,	Samarendranath	.. Cooch-Behar Victoria College.
	,,	Samiran	.. Non-collegiate student (Comilla Victoria College).
	,,	Satyendu	.. Rangpur Carmichael College.
	,,	Sudharanjan	.. Non-collegiate student (Rajshahi College).
	Chanda,	Dhrubananda	.. Non-collegiate student (City College).
	,,	Jitendranath	.. Mymensingh A. M. College.
	Chandra,	Praphullachandra	.. St. Xavier's College.
70	Chattopadhyay,	Ahindrakumar	.. Non-collegiate student (Bangabasi College).
	,,	Bhupatibhushan	.. Bangabasi College.
	,,	Birendranath	.. St. Xavier's College.
	,,	Durgapada	.. Bangabasi College.
	,,	Hrishikes	.. Ditto.
	,,	Kanailal	.. Scottish Church College.
	,,	Karunamay	.. City College.
	,,	Madanmohan	.. Bangabasi College.
	,,	Manindranath	.. Serampur College.
	,,	Radhakrishna	.. Bangabasi College.
80	,,	Sailendranath	.. City College.
	,,	Sarasitosh	.. Non-collegiate student (Scottish Church College).
	,,	Satischandra	.. Bhowanipur Asutosh College.
	,,	Sudhindukumar	.. City College.
	Chaudhuri,	Jaminimohan	.. Krishnanagar College.
	,,	Pulinbihari	.. Daulatpur Hindu Academy.
	,,	Satyabhushan	.. Comilla Victoria College.
	,,	Satyendranarayan	.. Bangabasi College.
	,,	Sudhirchandra, II	.. Vidyasagar College.
	Choudhury	Jalal Uddin Ahmed	.. Berhampur Krishnath College.
90	Das,	Balaicharan	.. Bangabasi College.
	,,	Bimalchandra	.. City College.
	,,	Byomkes	.. Bangabasi College.
	,,	Ganeschandra	.. Non-collegiate student (Bagerhat College).
	,,	Gatiram	.. Bankura Wesleyan College.
	,,	Praphullakumar	.. City College.
	,,	Raghunath	.. Serampur College.
	,,	Sachinandan	.. Bangabasi College.
	,,	Subodhchandra	.. Non-collegiate student (Hughli College).
	,,	Sudhirchandra	.. Bangabasi College.
100	Dasgupta,	Bimalendu	.. City College.
	,,	Jnanendranath	.. Scottish Church College.
	,,	Manoranjan	.. Chittagong College.
	,,	Upendranath	.. Barisal Brajamohan College.
	Dassarma,	Debiprasanna	.. Bangabasi College.
	,,	Nirmalchandra	.. Daulatpur Hindu Academy.
	Datta,	Baidyanath	.. Uttarpara College.
	,,	Bimalchandra	.. City College.
	,,	Bimalchandra	.. Non-collegiate student (Faridpur Rajendra College).
	,,	Dinabandhu	.. Mymensingh A. M. College.
110	,,	Hemchandra	.. Non-collegiate student (Mymensingh A. M. College).
	,,	Kshitiranjan	.. City College.
	,,	Nilima	.. Non-collegiate student. (Roll Com. F. N. 1.)
	,,	Santoshkumar, II	.. Bangabasi College.

	Datta, Sunilchandra	.. Comilla Victoria College.
	,, Upendranath	.. Bhowanipur Asutosh College.
	De, Birendranath	.. Bangabasi College.
	,, Bishnupada	.. Scottish Church College.
	,, Gokulchandra	.. Bangabasi College.
	,, Khagendrakumar	.. Non-collegiate student (Rajshahi College).
120	,, Radhabinod	.. Bangabasi College.
	Deb, Dineschandra	.. Ditto.
	Debbhuti, Subhankar	.. Bankura Wesleyan College.
	Dhara, Nalinikanta	.. St. Xavier's College.
	Dharchaudhuri, Amulyakumar	.. Comilla Victoria College.
	Enamul Huq	.. St. Xavier's College.
	Endapurkayastha, Amiansumay	.. City College.
	Gangopadhyay, Sailendranath	.. Hughli College
	,, Sambhucharan	.. Bangabasi College.
	Ghosh, Ajitkumar, II	.. Vidyasagar College.
130	,, Amalendu	.. Presidency College.
	,, Amiyakumar	.. Mymensingh A. M. College.
	,, Barindralal	.. Daulatpur Hindu Academy.
	,, Bhabanicharan	.. Scottish Church College.
	,, Debaprasad	.. Comilla Victoria College.
	,, Haralal	.. City College.
	,, Kamalkumar	.. Bangabasi College.
	,, Krishnadas	.. Non-collegiate student (Ripon College).
	,, Manindranath	.. Non-collegiate student (Pabna Edward College).
	,, Pannalal	.. Bangabasi College.
140	,, Sachindranath	.. Ditto.
	,, Sudhirchandra	.. Bankura Wesleyan College.
	,, Sukumar	.. Bhowanipur Asutosh College.
	,, Sunilkumar	.. City College.
	Ghoshal, Sachindranath	.. Bangabasi College.
	Gogai, Khagendranath	.. Gauhati Cotton College.
	Goswami, Nareschandra	.. Mymensingh A. M. College.
	Guha, Ajitkumar	.. Bangabasi College.
	,, Jogendramohan	.. Barisal Brajamohan College.
	,, Nimaibhushan	.. Scottish Church College.
150	,, Praphullakumar	.. Non-collegiate student (Pabna Edward College).
	Guharay, Usharanjan	.. Chittagong College.
	Gupta, Amalkumar	.. Barisal Brajamohan College.
	,, Harendrakumar	.. Ditto.
	,, Hiranmay	.. Bangabasi College.
	,, Narendranath	.. Non-collegiate student (Barisal Brajamohan College).
	,, Saratkumar	.. Bangabasi College.
	Guptaray, Sailendrakumar	.. City College.
	Guria, Bijaykumar.	.. Ditto.
	Hajra, Atulchandra	.. Midnapur College.
160	Haldar, Balaichand	.. Bangabasi College.
	Karmakar, Mahananda	.. Cooch-Behar Victoria College.
	Kazi Md. Bodrudduja	.. Islamia College.
	Khandker Abdul Khaleque	.. Rangpur Carmichael College.
	Khondoker A. F. M. Abdul Jabbar	.. Non-collegiate student (Faridpur Rajendra College).
	Kole, Rasbihari	.. Non-collegiate student (Bangabasi College).
	Kunar, Ajitkumar	.. Bankura Wesleyan College.
	Kundu, Amulyachandra	.. Faridpur Rajendra College.
	,, Biswanath	.. Bangabasi College.
	,, Nikhilnath	.. Ditto.
170	,, Ranajitkumar	.. Non-collegiate student (Pabna Edward College).
	Lahiri, Biswanath	.. Rangpur Carmichael College.
	Lawrence, Charles	.. St. Joseph's College.
	Mahommed Taimus	.. Sylhet M. C. College.
	Maiti, Asutosh	.. Midnapur College.
	,, Narayanchandra	.. Ditto.
	,, Sripaticharan	.. Bangabasi College.
	,, Sudhirkumar	.. Ditto.
	Maitra, Debaprasad	.. Non-collegiate student (St. Paul's College).
	,, Sudhirkumar	.. City College.
180	Majumdar, Amulyabhushan	.. Comilla Victoria College.
	,, Bhupendramohan	.. Presidency College.
	,, Dhirendrakumar	.. Scottish Church College.
	,, Manmdrakumar	.. Rajshahi College.
	,, Rabindrachandra	.. Mymensingh A. M. College.
	,, Sudhamay	.. City College.
	Mallik, Bimalenduprakas	.. Ditto.
	Manji, Manimohan	.. Ditto.
	Mayra, Bhupalchandra	.. Bangabasi College.
	Md. Abdur Razzaque	.. Comilla Victoria College.
190	Md. Abdus Samad	.. Mymensingh A. M. College.
	Md. Afzal Hossain	.. Rangpur Carmichael College.
	Md. Azmat Ali Miah	.. Bangabasi College.
	Md. Nural Islam	.. Chittagong College.
	Mitra, Jyotischandra	.. Midnapur College.
	,, Subjkaschandra	.. Bhowanipur Asutosh College.
	,, Subodhchandra	.. Howrah Narasinha Dutt College.

	Mitra, Sudhir K.	.. St. Paul's College.
	,, Sunilkumar	.. City College.
	Mojaffar Ahmad	.. Islamia College.
200	Mukhopadhyay, Amulyaratan	.. Ripon College.
	,, Anantabihari	.. Mymensingh A. M. College.
	,, Bhudeb	.. Ripon College.
	,, Bijaygopal	.. Vidyasagar College.
	,, Bimalchandra	.. St. Xavier's College.
	,, Bireswar	.. Non-collegiate student (Bankura Wesleyan College).
	,, Gopalchandra, I	.. Bangabasi College.
	,, Jayram	.. Bankura Wesleyan College.
	,, Madhusudan	.. Bangabasi College.
	,, Nilmadhab	.. Scottish Church College.
210	,, Nirmalkumar	.. Berhampur Krishnath College.
	,, Purnachandra	.. City College.
	,, Ranjitkumar	.. St. Xavier's College.
	,, Sadananda	.. Bangabasi College.
	,, Sobhendu	.. Bhowanipur Asutosh College.
	,, Subodhkumar	.. Ripon College.
	,, Tarasankar	.. Presidency College.
	Nag, Nirmalya	.. Mymensingh A. M College.
	Naha, Amarendramohan	.. Non-collegiate student (Comilla Victoria College).
	Naimuddin Mondal	.. Non-collegiate student (Rangpur Carmichael College).
220	Nath, Aswinikumar	.. Sylhet M. C. College.
	,, Sureschandra	.. Chittagong College.
	Pain, Jagadischandra	.. Bangabasi College.
	Pal, Nrisinhacharan	.. Berhampur Krishnath College.
	Pradhan, Mahendranath	.. Vidyasagar College.
	Pramanik, Nrityagopal	.. Non-collegiate student (Pabna Edward College).
	Ray, Abanikumar	.. City College.
	,, Amiyaranjan	.. Mymensingh A. M. College.
	,, Arunkumar	.. Bangabasi College.
	,, Arunkumar	.. Scottish Church College.
230	,, Debeschandra	.. Mymensingh A. M. College.
	,, Dineschandra, II	.. Bangabasi College.
	,, Gobardhan	.. Ditto.
	,, Kalikrishna	.. Ditto.
	,, Mahendraranjan	.. Non-collegiate student (Rajshahi College).
	,, Nirmalkumar	.. Uttarpara College.
	,, Pradyotkumar	.. Bangabasi College.
	,, Subodhchandra	.. Bhowanipur Asutosh College.
	,, Sudhirchandra	.. Daulatpur Hindu Academy.
	Raychaudhuri, Jatischandra	.. Comilla Victoria College.
240	,, Krishnapada	.. Vidyasagar College.
	,, Nirendrabijay	.. Faridpur Rajendra College.
	,, Rabindranath	.. Bangabasi College.
	,, Sachindrakumar	.. Cooch-Behar Victoria College.
	Raykarmakar, Nareskumar	.. Rangpur Carmichael College.
	Saha, Akshaycharan	.. Scottish Church College.
	,, Nrityagopal	.. Bangabasi College.
	Sahu, Bhushanchandra	.. Midnapur College.
	Saksena, Jwalaprasad	.. St. Paul's College.
	Samanta, Bhupendraprasad	.. Non-collegiate student (City College).
250	Sanyal, Dhirendranath	.. Non-collegiate student (Vidyasaga College).
	,, Jibanratan	.. Non-collegiate student (Pabna Edward College).
	,, Nirmalchandra	.. Mymensingh A. M. College.
	Sarkar, Birendranath	.. Bangabasi College.
	,, Praphullakumar	.. Cooch-Behar Victoria College.
	,, Rakhaldas	.. City College.
	,, Sankarprasad	.. Comilla Victoria College.
	,, Sukumar	.. Serampur College.
	,, Tarunkumar	.. Non-collegiate student (Vidyasagar College).
	Sen, Indranarayan	.. Ripon College.
260	,, Narendranath	.. Ditto.
	,, Pramodchandra	.. Sylhet M. C. College.
	,, Praphullakumar	.. City College.
	,, Renukakana	.. Non-collegiate student (Roll Cal. F. N. 3).
	,, Sudhansumohan	.. Cooch-Behar Victoria College.
	,, Sudhindrabhushan	.. Barisal Brajamohan College.
	,, Syamapada	.. Bhowanipur Asutosh College.
	Sengupta, Rabindranath	.. Midnapur College.
	,, Satyajit	.. Non-collegiate student (Vidyasagar College).
	,, Srischandra	.. Bangabasi College.
270	Shafiquer Rahman	.. Comilla Victoria College.
	Sil, Santijiban	.. Non-collegiate student (Pabna Edward College).
	Sinha, Dhirendranarayan	.. Comilla Victoria College.
	Sultan Ali Majumdar	.. Sylhet M. C. College.
	Syed Abdul Ahad	.. Midnapur College.
	Tapadar, Haripada	.. Bangabasi College.
	Tripathi, Phanibhushan	.. Bhowanipur Asutosh College.
277	Yusufuddin Pramanik	.. Islamia College.

The undermentioned candidates who were allowed to appear at the I. Sc. Examination, 1931, in one or two subjects are declared to have passed in the subject or subjects under which their names appear :—

(In alphabetical order.)

Physics and Chemistry.

1	Ray, Haripada	..	Barisal Brojomohan College.

Mathematics.

1	Bandyopadhyay, Gadadharkrishna	..	Non-collegiate student (Roll Cal. N. 7).
2	Biswas, Radhabinod	..	Non-collegiate student (Bangabasi College).
3	Das, Girindrabhushan	..	Ditto.
4	Mukhopadhyay, Bhudebchandra	..	Non-collegiate student (City College).
5	,, Sudhirkumar	..	Non-collegiate student (Presidency College).
6	Ray, Satyendrachandra	..	Ditto.

Physics.

1	Guha, Kumudkanta	..	Non-collegiate student (Bangabasi College).
2	Sengupta, Byomkes	..	Non-collegiate student (Berhampur Krishnath College).

The examinations of the following candidates are cancelled for using unfair means in the Examination Hall and for gross misconduct. Additional punishment, if any, imposed is noted against the name of each : —

I. Sc. Examination, 1931.

	Name with Roll No. and College.	Order.
1.	Kanailal Saha (Regtd. No. 7133 of 1929-30), Ber. 44, Berhampur Krishnath College.	The examination of the candidate for 1931 is cancelled.
2.	Phanibhushan Sen (Regtd. No. 4872 of 1928-29), Cal. 1123, City College.	Ditto.
3.	Jaykrishna Hajaribarma (Regtd. No. 1351 of 1929-30), Cal. 1173, City College.	The examination of the candidate for 1931 is cancelled and the candidate is debarred from appearing at any examination of this University in 1932.
4.	Bhabanipada Bhattacharyya (Regtd. No. 4302 of 1929-30), Cal. 1479, Vidyasagar College.	Ditto.
5.	Sudhirchandra Gupta (Regtd. No. 1886 of 1929-30), Cal. 1528, Presidency College.	Ditto.
6.	Harendranath Ray (Regtd. No. 4564 of 1929-30), Cal. N. 158, Vidyasagar College (Non-collegiate student).	Ditto.
7.	Susilkumar Dasgupta (Regtd. No. 4759 of 1929-30), Bar. 57, Barisal B. M. College.	Ditto.
8.	Sudhirindrakumar Guhabiswas (Regtd. No. 4814 of 1929-30), Bar. 70, Barisal B. M. College.	The examination of the candidate for 1931 is cancelled.
9.	Nikhilchandra Karal (Regtd. No. 6521 of 1928-29), Bar. 83, Barisal B. M. College.	Ditto.
10.	Manoranjan Chakrabarti Bar. N. 12 (Regtd. No. 4706 of 1929-30), Barisal Brajamohan College (Non-collegiate student).	The examination of the candidate for 1931 is cancelled and the candidate is debarred from appearing at any examination of this University in 1932.
11.	Nirendranath Som (Regtd. No. 2852 of 1928-29), Baul. N. 80, Rajshahi College (Non-collegiate student).	The exaination of the candidate for 1931 is cancelled.

	Name with Roll No. and College.	Order.
12.	Satyeschandra Ghosh (Regtd. No. 7087 of 1929-30), Bor. 25, Berhampur Krishnath College.	The examination of the candidate for 1931 is cancelled and the candidate is debarred from appearing at any examination of this University in 1932.
13.	Pareschandra Guha (Regtd. No. 1418 of 1927-28), Coo. N. 10, Non-collegiate student.	Ditto.
14.	Niranjan Ray (Regtd. No. 3544 of 1928-29), Coo. N. 11, Non-collegiate student.	Ditto.
15.	Phanibhushan Sen (Regtd. No. 3025 of 1929-30), Far. N. 10, Faridpur Rajendra College (Non-collegiate student).	Ditto.
16.	Bimalendrakumar Sarkardebbarman (Regtd. No. 2080 of 1928-29), Mym. 96, Mymensingh A. M. College.	Ditto.
17.	Debendranath Adhikari (Regtd. No. 1635 of 1926-27), Rang. 64, Asutosh College.	Ditto.
18.	Rahaman Ali Bashumma (Regtd. No. 4155 of 1929-30), Rang. N. 11, Rangpur Carmichael College (Non-collegiate student).	Ditto.
19.	Anilchandra Bandyopadhyay (Regtd. N. 6249 of 1927-28), Rang. N. 12, Rangpur Carmichael College (Non-collegiate student).	Ditto.
20.	Makhanlal Datta (Regtd. No. 432 of 1929-30), I. Sc. Roll. Com. N. 20, Comilla Victoria College (Non-collegiate student).	The examination of the candidate for 1931 is cancelled.
21.	Debaprasad Sengupta (Regtd. No. 578 of 1929-30), I. Sc. Roll Com. N. 45, Comilla Victoria College (Non-collegiate student).	Ditto.

N. SEN,

Controller of Examinations.

Krishnagar College—Session 1931-1932.

Krishnagar, the 13th May 1931.

The College reopens on the 13th July after the long vacation. Admissions will commence immediately after the publication of the results in the *Calcutta Gazette*. The College teaches up to the B.A. and B.Sc. standard of the Calcutta University. It has got affiliation in the usual Arts and Science subjects and in Honours in English, Sanskrit and Mathematics. The monthly tuition fee amounts to Rs. 6 for the I.A., Rs. 7 for the I.Sc. and B.A. and Rs. 8 for the B.Sc. Classes.

The College is situated in the midst of an extensive compound of over 100 bighas, containing a large number of playing fields. There is provision for all outdoor and indoor games. The College provides well-appointed common and reading rooms for the use of the students, who receive individual attention both in their studies and their games. There is a fine new two-storeyed Hindu hostel in the college compound, and hostel charges (including rent, furniture, light and medical attendance) do not exceed Rs. 14 a month. The boarders keep excellent health, and the general health of the town is also now quite good. There is also a Muhammadan hostel attached to the College.

A considerable number of Government and private free-studentships and stipends is awarded every year in August or September to poor but deserving students of the College.

For Prospectus and Admission form, apply, enclosing stamped and addressed envelope, to the Professor-in-charge, Krishnagar College.

P. C. BANERJI, *Professor in charge.*

Admission to the Compounders Class, Lytton Medical School, Mymensingh, Session 1931-32.

Mymensingh, the 10th June 1931.

Applications for admission into the Compounders Class, Lytton Medical School, Mymensingh, with copies of (*a*) University certificate and (*b*) certificate of character from a Deputy Magistrate or any gentleman of equal rank or from the Head Master or Principal of the School or College in which the candidate last studied will be received by this office up to the 10th July 1931. None need apply who has not passed the Matriculation Examination of a recognised University.

All the candidates are required to appear personally before the Superintendent with their original certificates on the 24th July 1931 at 10 a.m. for selection.

NOTE.—Every student who is selected for admission shall pay an entrance fee of Rs. 4 and first half-yearly instalment of Rs. 12 tuition fee. He shall also pay the amount of sports and athletic club fee of Rs. 2.

S. J. V. FOX, MAJOR, I.M.D.,

Supdt., Lytton Medical School, Mymensingh.

Admission of students in the Compounders Class of the Ronaldshay Medical School, Burdwan.

Burdwan, the 15th June 1931.

Applications for admission into the Compounders Class with copies of certificates of (1) having passed the Matriculation Examination or its equivalent, (2) certificates of character from a Magistrate or Head Master or Principal of the School or College in which the candidate last studied, (3) certificate of age (candidates must not be under 16 years on the date of admission) will be received in the office of the Superintendent of the School up to the 10th July 1931.

Late and incomplete applications will not be considered.

The candidates will have to appear before the Superintendent in the school office on the 25th July 1931 at 11 a.m. for selection. Selected candidates shall join and pay all fees on the 1st August 1931, otherwise their names will be removed from the list and new candidates from the waiting list will be taken in their places.

B. H. SINGH, MAJOR, I.M.S.,

Supdt., Ronaldshay Medical School, Burdwan.

Admission to the Compounder Class, Dacca Medical School—Session 1931-32.

Dacca, the 16th June 1931.

APPLICATIONS for admission to the Compounder Class of the Dacca Medical School will be received not later than 10th July 1931.

Applications should be supported by (*a*) a true copy of certificate of passing Matriculation or its accepted equivalent examination, (*b*) a testimonial of good moral character from a Deputy Magistrate, or a gentleman of equal position or from the Principal or from the Head Master of the College or School in which the candidate last studied, (*c*) a certificate of age—Matriculation certificate or a certificate from the Head of the Institution in which the candidate last studied will also be accepted as evidence of age.

Applications from the candidates must reach the office of the Superintendent not later than 10th July 1931 for registration of their names and they must attend for personal interview on the 26th July 1931 together with the original certificates.

Late or incomplete applications will not be entertained.

N.B.—Every male student who is selected for admission shall pay an entrance fee of Rs. 4 and first half-yearly instalment of Rs. 12 tuition fee. He shall also pay the sports and athletic club fee of Rs. 2.

C. R. O'BRIEN, LT.-COL., I.M.S.,

Supdt., Dacca Medical School.

Islamia College, Calcutta.

Admission of Students.

The 22nd June 1931.

Islamia College, Calcutta, affiliated to Calcutta University for I.A., I.Sc. and B.A. (with Honours in English, Economics, Philosophy, History, Arabic, Persian and Mathematics), reopens after Summer Vacation on 30th June 1931. The College offers to Muslims a unique opportunity of study in Islamic atmosphere.

The members of the Teaching Staff possess high educational qualifications and are mostly Muslims. The University results have been uniformly satisfactory. There are free-studentships and concessions for deserving students.

Accommodation is provided in the Baker Hostel. Applications for admission will be received immediately after the results of the different University Examinations are published.

Copies of prospectus and application form are obtainable from the Principal's office or on application with one anna stamp.

H. HARLEY, *Principal.*

Orders by the Vice-Chancellor and Syndicate of the Calcutta University.

NOTICE.

Senate House, the 22nd June 1931.

The Beereswar Mitter Medal for 1932, will be awarded to the author of the best essay in English in the following subjects:—

(1) Industrial Finance in India.
(2) The Silk Industry of Bengal: its present position and future prospects.

The competition for the medal is limited to candidates who have, at any time, been admitted to a degree in this University. Each candidate for the medal is required to send his essay to the undersigned in a sealed cover under a distinguishing motto. The name of the candidate must also be forwarded at the same time in a sealed cover bearing the motto outside.

The essay in competition for the medal must reach the undersigned not later than the 1st of October 1931.

The medal will not be awarded to the author of any essay unless such essay furnishes evidence of research or special investigation or embodied useful suggestions relating to the subject.

The successful candidates will be required to publish his essay.

N. SEN,
Controller of Examinations.

Calcutta University.

NOTIFICATION.

Senate House, the 23rd June 1931.

The Jogendrachandra Ghosh's Research Prize in Comparative Indian Law for the year 1931 will be awarded on an essay on the following subject selected for the prize:—

> Proprietary rights of women under the ancient Hindu Law with special reference to the changes introduced by judicial decisions and British India Legislation.

The attention of the intending candidates is expressly called to the following conditions laid down for the prize:—

(*i*) By Comparative Indian Law shall be meant the Hindu Smriti Sastra called "Byabaharkhanda" and a comparison of the standard Sanskrit authorities on the subject with British Indian Law as contained in Parliamentary Statutes, Regulations and Acts of the Indian Legislative Council, and the law as laid down in leading cases. The study, which it shall be the object of the prize to encourage, is the history of the Hindu Smriti Sastra as it existed at and from the time when India came under British Rule and how and to what extent it has been altered under British influence, regard being had not only to the existing Statutes, Regulations and Acts, but also to those which, having been in operation for a time, have now been repealed or become obsolete and regard being also had not only to the existing leading cases, but to cases which were considered leading at one time, but have now been overruled, and how and to what extent such alteration has affected Hindu society.

(*ii*) The essay may deal with the whole of the Indian Comparative Law as before defined or with part or parts thereof, but in no case shall an essay be entitled to competition which in any way attacks the religious belief, usages or institution of His Majesty's subject.

(*iii*) By Adhyapak shall be meant scholars of the Smriti Sastra, students of the Smriti in the Government Sanskrit College in Calcutta, and in the tols of indigenous Brahmanical schools which send in candidates for the title examinations held in that College, and students in other similar institutions in India.

(*iv*) Every candidate for the prize shall be required to indicate generally in a preface to his thesis, and specially in notes, the sources from which his information is taken, the extent to which he has availed himself of the work of others, and the portion of the thesis which he claims as original. He shall further be required to state whether his research has been conducted independently, under advice or in co-operation with others, and in what respects his investigations appear to him to tend to the advancement of knowledge.

(*v*) Successful candidates shall be required to publish their essays, and if necessary they shall receive help from the University for the purpose.

(*vi*) The essay or essays shall be written either in English or in Bengali, but if any competitor sends in an essay in vernacular language other than Bengali he shall be bound to furnish English translation thereof.

Every candidate for the prize should send in three copies of his thesis to the undersigned on or before the 21st December 1931.

N. SEN,

Controller of Examinations.

Education Department, Bengal.

NOTIFICATION.

Calcutta, the 25th June 1931.

The undermentioned candidates are awarded Post-Graduate Scholarships of the value of Rs. 100 a month each for one year in the first instance, with effect from 1st July 1931:—

(1) Tarapada Bandyopadhyay.

Subject of research.

Physical Chemistry, with special reference to the subject of Photo Chemical researches.

Place of work.

Dacca University.

(2) A. F. M. Abdul Huq.

Subject of research.

Islamic Fiqh, with special reference to the subject of origin and development of Juridical thinking in Islam in the first two centuries A. H.

Place of work.

Dacca University.

(3) Sarasikumar Saraswati.

Subject of research.

Art and Archæology, with special reference to the subject of Bengal Art and Archæology.

Place of work.

Varendra Research Society, Rajshahi.

J. M. BOTTOMLEY,

Director of Public Instrn., Bengal (offg.).

The Calcutta Gazette

THURSDAY, JULY 2, 1931.

Part II

Advertisements.

Notices.

Advertisements, Notices, etc., intended for insertion in this Part of the Gazette cannot be received after noon of Saturday.

IMPERIAL BANK OF INDIA.

Statement of the affairs of the Imperial Bank of India on the 19th June 1931.

LIABILITIES.

	Rs.	A.	P.
Subscribed Capital ..	11,25,00,000	0	0
Capital paid up ..	5,62,50,000	0	0
Reserve ..	5,40,00,000	0	0
Public Deposits ..	13,79,90,000	0	0
Other Deposits ..	64,82,07,000	0	0
Loans against securities per contra ..	....		
Loans from the Government of India under section 20 of the Paper Currency Act, against Inland bills discounted and purchased per contra ..	....		
Contingent liabilities ..	....		
Sundries ..	2,09,10,000	0	0
	91,73,57,000	0	0

ASSETS.

	Rs.	A.	P.
Government Securities ..	28,09,82,000	0	0
Other authorized securities under the Act ..	2,64,74,000	0	0
Ways and Means Advances to the Government of India ..	....		
Loans ..	8,72,98,000	0	0
Cash Credits ..	28,93,76,000	0	0
Inland bills discounted and purchased ..	3,76,05,000	0	0
Foreign bills discounted and purchased ..	37,25,000	0	0
Bullion ..	....		
Dead stock ..	2,75,66,000	0	0
Liability of constituents for contingent liabilities per contra ..	....		
Sundries ..	1,02,24,000	0	0
Balances with other Banks ..	15,68,000	0	0
	76,48,18,000	0	0
Cash ..	15,25,39,000	0	0
	91,73,57,000	0	0

The above balance sheet includes :—

	£
Deposits in London ..	949,200
Advances and Investments in London ..	944,400
Cash and balances at other Banks in London ..	110,300

Percentage 18·89.

Bank rate 6 per cent.

OSBORNE A. SMITH,
Managing Governor.

(1351—1)

Sale notice.

Garjan and miscellaneous trees in the Cox's Bazar Division, 1931-32.

The Divisional Forest Officer, Cox's Bazar Division, will offer for sale by auction at the Forest Office, Cox's Bazar, on Tuesday, the 25th August 1931, beginning at 11 a.m , the undernoted lots of Garjan and miscellaneous trees, in Reserved Forests.

Intending purchasers are invited to inspect the lots before the date of sale : -

Serial No.	Species.	5′ to 5′ 11″.	6′ to 6′ 11″.	7′ to 7′ 11″.	8′ to 8′ 11″.	9′ to 9′ 11″.	10′ to 10′ 11″	11′ to 11′ 11″	12′ and over.	Total.	Grand total.
	Garjania Range.										
	Fulchari Block.										
	Section I.										
1—39	Garjan sound	..	..	..	2	1	3	..	1	3	10	39
	Garjan partly sound	..	..	..	..	2	..	1	..	..	3	
	Garjan unsound	..	..	..	..	..	2	..	..	1	3	
	Boilam sound	..	..	..	1	1	..	..	..	..	2	
	K. Jam sound	..	..	1	2	..	..	..	..	..	3	
	K. Jam unsound	..	..	3	3	2	..	..	..	1	9	
	D. Jam sound	..	..	..	2	..	..	..	..	..	2	
	D. Jam unsound	..	..	1	..	2	1	..	..	..	4	
	Chandul sound	..	..	..	1	..	..	..	..	..	1	
	Chandul unsound	..	..	..	1	..	1	..	..	..	2	
	Section II.										
40—82	Garjan sound	..	..	..	3	1	..	..	..	..	4	43
	Garjan partly sound	..	..	..	9	7	3	2	2	..	23	
	Garjan unsound	..	..	..	..	1	1	1	..	..	3	
	Boilam sound	..	..	..	..	..	1	..	..	..	1	
	Boilam unsound	..	..	..	1	..	..	1	..	..	2	
	K. Jam sound	..	..	..	..	1	..	..	..	..	1	
	K. Jam unsound	..	..	..	..	3	..	..	..	..	3	
	Am sound	..	..	..	1	1	..	..	..	..	2	
	Am unsound	..	..	..	..	1	..	..	..	..	1	
	D. Jam unsound	..	..	1	..	1	..	..	..	..	2	
	Chandul sound	..	..	1	..	..	..	..	..	..	1	
	Section III.										
83—116	Garjan sound	..	..	..	6	1	..	..	..	..	7	34
	Garjan partly sound	..	..	..	2	2	..	1	..	1	6	
	Garjan unsound	..	..	..	3	2	..	1	2	1	9	
	Boilam sound	..	..	..	1	..	..	..	..	..	1	
	K. Jam unsound	..	..	..	1	..	1	..	..	..	2	
	D. Jam sound	..	..	..	..	1	..	..	..	..	1	
	D. Jam unsound	..	..	1	..	..	..	2	..	..	3	
	Boilam sound	..	..	..	1	..	..	..	..	..	1	
	Chandul sound	..	..	..	2	..	..	..	..	..	2	
	Chandul unsound	..	..	..	2	..	..	..	..	..	2	
	Section IV.										
117—200	Garjan sound	..	..	..	21	7	3	..	..	..	31	84
	Garjan partly sound	..	..	..	6	9	2	1	..	..	18	
	Garjan unsound	..	..	2	4	4	2	..	2	1	15	
	K. Jam unsound	..	..	..	1	2	..	..	..	..	3	
	D. Jam sound	..	..	1	2	..	..	..	..	..	3	
	D. Jam unsound	..	..	..	..	2	..	..	..	..	2	
	Bhadi unsound	..	..	..	1	..	..	..	..	..	1	
	Am sound	..	..	..	2	..	..	..	..	..	2	
	Chandul sound	..	..	..	2	..	..	..	..	..	2	
	Chandul unsound	..	..	1	1	..	1	1	..	..	4	
	Batana sound	..	..	..	..	1	..	..	..	..	1	
	Batana unsound	..	..	..	1	1	..	..	..	..	2	
	Section V.										
201—245	Garjan sound	..	..	..	7	8	1	..	1	..	17	44
	Garjan partly sound	..	..	..	4	2	1	..	..	..	7	
	Garjan unsound	..	..	..	4	1	2	..	..	..	7	
	D. Jam sound	..	..	1	..	..	..	..	..	..	1	
	D. Jam unsound	..	..	2	..	2	..	..	..	..	4	
	K. Jam unsound	..	..	..	2	..	..	..	..	..	2	
	Am sound	..	..	1	1	..	1	..	..	..	3	
	Am unsound	..	..	2	..	..	..	..	..	..	2	
	Chandul sound	..	..	..	..	..	1	..	..	..	1	
	Section VI.										
246—307	Garjan sound	..	..	..	10	1	2	..	..	..	13	63
	Garjan partly sound	..	..	..	8	1	..	1	..	..	10	
	Garjan unsound	..	..	..	6	2	1	2	3	..	14	
	K. Jam unsound	..	..	1	..	1	1	..	..	1	4	
	D. Jam sound	..	..	..	..	1	..	..	..	..	1	
	D. Jam unsound	..	..	2	2	1	..	..	..	..	5	
	Am sound	..	..	..	1	1	..	..	..	..	2	
	Chandul sound	..	..	1	..	..	..	..	..	..	1	
	Chandul unsound	..	..	..	5	4	..	1	1	..	11	
	Batana unsound	..	..	..	1	..	..	..	..	..	1	
	Koyabong unsound	..	..	1	..	..	..	..	..	..	1	

Serial No.	Species.	5′ to 5′ 11″.	6′ to 6′ 11″.	7′ to 7′ 11″	8′ to 8′ 11″.	9′ to 9′ 11″.	10′ to 10′ 11″	11′ to 11′ 11	12′ and over.	Total.	Grand total.
	Eadgar Block.										
	Section I.										
1—182	Garjan sound	..	1	16	16	1	3	1	..	38	
	Garjan partly sound	..	..	1	..	..	1	..	..	2	
	Garjan unsound	..	..	2	2	2	..	..	..	6	
	Boilam sound	..	..	1	..	..	1	..	1	3	
	Boilam unsound	..	..	1	..	..	..	..	1	2	
	Chapalish sound	..	..	6	4	..	..	..	..	10	
	Chapalish unsound	..	..	1	4	..	..	..	..	5	
	Bhadi sound	..	..	5	5	1	..	..	..	11	
	Moz sound	..	1	18	12	6	6	..	..	43	
	Moz unsound	..	..	2	3	1	..	..	1	7	
	K. Jam sound	..	..	..	..	1	..	..	..	1	
	Pitali sound	..	..	1	1	2	3	1	1	8	
	Pitali unsound	..	1	..	..	..	..	..	..	1	
	Chandul sound	..	..	3	4	3	3	..	2	15	
	Chandul unsound	..	..	1	2	..	..	..	..	3	
	Dumur unsound	..	..	1	..	..	..	1	1	3	182
	Simul sound	..	..	..	..	1	..	..	1	2	
	Chakua sound	..	..	..	2	..	..	..	..	2	
	Chakua unsound	..	..	1	..	..	..	..	..	1	
	Pitraj sound	..	..	2	..	..	..	..	..	2	
	Chatian sound	..	..	1	..	1	..	..	..	2	
	Bharta sound	..	..	1	..	..	..	..	..	1	
	Baraijhata sound	..	..	3	..	..	..	..	..	3	
	Am sound	..	..	1	1	..	..	..	..	2	
	Kadam sound	..	..	1	..	..	..	..	..	1	
	Cheradong sound	..	..	..	..	1	..	..	..	1	
	Odal sound	..	..	..	1	..	..	..	..	1	
	Kandula unsound	..	..	..	..	1	..	..	1	2	
	Gutgutia sound	..	..	..	..	1	..	..	..	1	
	Supan sound	..	..	..	..	1	..	..	..	1	
	Supan unsound	..	..	..	..	1	1	..	..	2	
	Section II.										
183—417	Garjan sound	..	1	21	6	5	7	..	1	41	
	Garjan partly sound	..	..	1	2	..	..	..	..	3	
	Garjan unsound	..	2	3	3	3	1	..	1	13	
	Boilam sound	..	..	1	..	..	1	..	..	2	
	Boilam unsound	..	..	..	..	1	..	1	..	2	
	Bhadi sound	..	..	2	1	..	..	..	..	3	
	Moz sound	..	7	5	1	3	..	..	..	16	
	Moz unsound	..	3	2	1	..	1	1	..	9	
	Pitali sound	..	..	..	..	..	..	..	1	1	
	Chandul sound	..	10	4	5	1	2	1	..	23	
	Chandul unsound	..	5	3	1	1	1	4	..	15	
	Chapalish sound	..	..	..	1	..	..	..	..	1	
	Chapalish unsound	..	..	2	..	1	..	..	..	3	
	Dumur unsound	..	1	..	..	..	..	..	..	1	
	Chakua sound	..	1	..	..	..	1	..	..	2	
	Chakua unsound	..	..	..	..	1	1	..	..	2	
	Pitraj sound	..	1	1	1	..	..	..	..	3	
	Pitraj unsound	..	1	..	..	..	..	..	..	1	
	Bharta unsound	..	1	..	..	..	..	..	..	1	
	Am sound	..	5	10	4	..	..	..	..	19	
	Am unsound	..	3	..	..	..	..	..	..	3	
	Kandula unsound	..	..	1	..	..	..	..	..	1	
	Baraijhata sound	..	1	..	..	..	..	..	..	1	
	Baraijhata unsound	1	..	..	..	..	..	..	..	1	
	Supan sound	..	..	2	1	..	1	..	..	4	235
	K. Jam sound	..	..	1	1	..	..	..	..	2	
	K. Jam unsound	3	5	4	4	1	..	1	..	18	
	Hargeza sound	..	..	1	1	..	..	..	..	2	
	Hargeza unsound	..	1	..	..	..	..	..	..	1	
	D. Jam sound	..	5	2	..	1	..	..	..	8	
	D. Jam unsound	..	1	..	1	..	..	..	..	2	
	Arshal sound	..	..	1	..	..	..	..	..	1	
	Kayabati sound	..	1	..	..	..	..	..	..	1	
	Butbutia sound	..	1	..	1	..	..	..	..	2	
	Butbutia unsound	..	..	1	..	..	..	..	..	1	
	Suruzbet sound	..	..	1	..	..	..	..	..	1	
	Batana sound	..	2	3	2	..	1	..	..	8	
	Batana unsound	..	2	1	3	..	..	..	..	6	
	Gamari sound	..	..	..	1	..	..	..	..	1	
	Gamari unsound	..	1	..	..	..	..	..	..	1	
	Kasai sound	..	1	..	..	..	..	..	..	1	
	Putijam sound	..	..	1	..	..	..	..	..	1	
	Chamkala unsound	..	1	..	1	..	..	..	..	2	
	Telsur unsound	..	..	1	..	..	..	..	..	1	
	Bharala sound	..	1	..	..	..	..	..	..	1	
	Kala siris sound	..	..	1	..	..	..	..	..	1	
	Haritaki unsound	..	..	..	1	..	..	..	..	1	
	Tenga Jam unsound	..	1	..	..	..	..	..	..	1	

Serial No.	Species.	5′ to 5′ 11″.	6′ to 6′ 11″.	7′ to 7′ 11″.	8′ to 8′ 11″.	9′ to 9′ 11″.	10′ to 10′ 11″	11′ to 11′ 11″	12′ and over.	Total.	Grand total.
	Section III.										
418—510	Jarul sound	..	..	..	1	1	..	..	..	..	2
	Garjan sound	..	..	..	10	3	4	..	..	..	17
	Garjan partly sound	..	..	..	..	2	..	1	..	..	3
	Garjan unsound	..	..	..	1	..	1	..	..	..	2
	Chapalish unsound	..	..	..	1	..	1	..	..	..	2
	Bhadi sound	..	..	..	1	1	..	1	..	..	3
	Bhadi unsound	..	..	..	1	1	..	..	..	..	2
	Simul sound	..	..	..	..	..	..	..	..	1	1
	Kainjal sound	..	..	..	1	..	..	..	..	..	1
	Chandul sound	..	..	..	4	..	1	..	..	1	6
	Chandul unsound	..	..	..	2	2	..	1	..	1	6
	Moz sound	..	..	1	..	..	..	..	..	..	1
	Moz unsound	..	..	..	3	..	2	1	..	..	6
	Arshal unsound	..	..	1	1	..	..	..	..	..	2
	Hargeza sound	..	..	..	1	..	..	..	..	..	1
	Tenga Jam unsound	..	..	..	1	..	..	..	..	..	1
	Harina unsound	..	..	..	1	..	..	..	..	..	1
	Batana sound	..	..	..	..	..	1	..	..	..	1
	Batana unsound	..	..	2	1	2	..	..	..	..	5
	Am sound	..	..	1	5	1	..	..	..	..	7
	D. Jam sound	..	..	..	1	..	..	..	..	..	1
	D. Jam unsound	..	..	..	2	1	..	..	..	..	3
	K. Jam sound	..	..	..	2	..	..	..	..	..	2
	K. Jam unsound	..	1	1	7	1	..	..	..	..	10
	Nab Jam unsound	..	..	..	2	..	..	..	1	..	3
	Boilam sound	..	..	..	1	..	1	..	..	..	2
	Supan unsound	..	..	..	..	..	1	..	..	..	1
	Chakua sound	..	..	..	1	..	..	..	..	..	1
	Ringbhang A Block.										
	Section I.										
511—583	Jarul unsound	..	..	..	..	1	..	..	..	..	1
	Garjan sound	..	..	1	17	12	1	1	..	..	32
	Garjan partly sound	..	..	..	..	2	1	1	3	..	7
	Garjan unsound	..	..	2	4	3	..	3	..	1	13
	Bhadi sound	..	..	..	1	..	..	..	..	..	1
	Bhadi unsound	..	..	1	..	1	..	..	..	..	2
	Khudi Jam unsound	..	..	..	..	1	..	..	..	..	1
	Chandul unsound	..	..	..	1	..	..	..	..	..	1
	Arshal sound	..	..	..	1	1	..	..	..	..	2
	Arshal unsound	..	..	..	2	1	..	..	..	..	3
	Harina unsound	..	..	..	1	..	..	..	..	..	1
	Batana sound	..	..	1	..	..	..	..	..	..	1
	Batana unsound	..	..	1	1	1	..	..	..	..	3
	Am sound	..	..	..	3	..	..	..	..	..	3
	Am unsound	..	..	..	..	..	..	..	..	..	1
	Pitraj sound	..	..	1	..	..	..	..	..	..	1
	Section II.										
584—670	Garjan sound	..	..	5	37	5	2	..	..	..	49
	Garjan partly sound	..	..	..	1	4	..	..	..	..	5
	Garjan unsound	..	..	2	9	3	5	2	1	..	22
	Chapalish sound	..	..	..	..	1	..	..	..	..	1
	D. Jam unsound	..	..	..	1	..	..	..	..	..	1
	Bhadi sound	..	..	..	1	1	..	..	..	..	2
	Bhadi unsound	..	..	..	..	1	..	..	..	..	1
	Koroi sound	..	..	1	..	..	..	..	..	..	1
	Am sound	..	..	..	1	..	..	..	..	..	1
	Batana sound	..	..	..	..	1	..	..	..	..	1
	Hargeza sound	..	..	..	2	..	..	..	..	..	2
	Hargeza unsound	..	..	..	1	..	..	..	..	..	1
	Teknaf Range.										
	Block XVII.										
	Section I.										
3—34	Garjan sound	..	..	..	4	3	2	1	1	..	11
	Garjan unsound	..	..	3	1	2	1	..	..	1	8
	Pitraj sound	..	..	..	..	1	1	..	..	..	2
	Pitraj unsound	..	1	..	1	..	..	..	..	..	2
	Chapalish sound	..	..	..	1	..	..	..	1	..	2
	Chapalish unsound	..	..	..	2	1	1	2	..	..	6
	Jarul sound	..	..	..	1	..	..	..	..	..	1

Serial No.	Species.	5′ to 5′ 11″.	6′ to 6′ 11″.	7′ to 7′ 11″.	8′ to 8′ 11″.	9′ to 9′ 11″.	10′ to 10′ 11″	11′ to 11′ 11″	12′ and over.	Total.	Grand total.
	Section II.										
35—45	Garjan unsound	..	..	..	..	..	1	..	..	..	1
	Chapalish sound	..	..	1	1	1	..	..	..	..	3
	Chapalish unsound	..	..	2	..	..	..	..	..	..	2
	Bhadi sound	..	..	..	2	..	..	..	..	..	2
	Bhadi unsound	..	..	1	1	..	..	..	..	..	2
	Kainjal unsound	..	..	..	..	..	1	..	..	..	1	11
	Section III.										
46—55	Garjan sound	..	..	..	1	..	1	1	..	..	3
	Garjan unsound	..	..	1	1	..	1	..	..	..	3
	Chapalish sound	..	..	..	1	..	..	..	..	..	1
	Chapalish unsound	..	..	1	..	..	..	..	..	..	1
	Jam sound	..	..	..	1	..	..	..	..	..	1
	Pitali sound	..	..	..	..	..	1	..	..	..	1	10

Rezu Range.

Rajarkul Block.

	Section I.										
1—37	Garjan sound	..	..	1	3	2	4	4	4	2	20
	Garjan unsound	..	..	..	..	..	2	..	..	..	2
	K. Jam sound	..	..	1	3	..	1	1	1	..	7
	K. Jam unsound	..	..	..	2	..	1	1	1	..	5
	Jam sound	..	..	1	1	..	1	..	..	..	3	37
	Section II.										
38—64	Garjan sound	..	..	..	..	..	1	1	..	1	3
	Garjan unsound	..	..	..	..	..	..	1	1	2	4
	K. Jam sound	..	..	3	5	1	2	..	..	..	11
	K. Jam unsound	..	..	..	5	..	1	..	..	2	8
	Jam	..	..	1	..	..	..	..	..	..	1	27

Conditions of sale.

1. The Divisional Forest Officer is not bound to accept the highest or any offer for any lot. The sale of any lot, the value of which exceeds Rs. 2,000, shall not be complete until confirmed by the Conservator of Forests.

2. Successful bidders shall immediately deposit as earnest money 1/10th of the total bid in currency notes, which will be returned if the sale is not confirmed, and will be retained as security deposit if the same is confirmed.

3. Purchasers will be required to sign agreements in printed forms for outright sales. Copy of this form may be seen at the Divisional Forest Office, Cox's Bazar or Chittagong, and at the Range Offices.

4. The following are among the conditions of the agreements for all lots of the sale :—

(1) Felling and extraction to be completed by 30th April 1932.

(2) The purchase money to be paid in four instalments as follows :—

	Per cent.	Per cent.
1st instalment, 1st November 1931	10	100
2nd instalment, 1st December 1931	40	
3rd instalment, 1st January 1932	40	
4th instalment, 1st February 1932	10	

5. Failure to sign the agreement within one month of confirmation of sale will render the purchasers liable to forfeiture of the security deposit.

The lot or lots so affected shall be resold by public auction or otherwise as the Divisional Forest Officer may think fit, and the defaulting purchaser shall be liable to make good any shortage on such resale.

6. If a tree shown as "sound" in the sale notice is found on felling to be "unsound" the Divisional Forest Officer may at his discretion order a refund of a proportionate amount on the unsound portion of the tree.

7. "D" class poles used for saw-benches will not be charged for unless removed. They must, however, be marked by a Forest Officer before felling and if removed will be charged for at schedule rates.

S. A. YUSUF,

Divisional Forest Officer, Cox's Bazar Division.

Cox's Bazar, the 12th June 1931.

THE COMMISSIONERS FOR THE PORT OF CHITTAGONG.

NOTIFICATION.

The following abstract account of the receipts and expenditure of the Chittagong Port Funds for the year 1930-31 is published for general information under section 36, sub-section (2) of the Indian Ports Act, 1908 :—

Abstract Account of Income and Expenditure for the year 1930-31.

REVENUE ACCOUNT.

Income.

Particulars.	Amount. Rs. A. P.	Total. Rs. A. P.
Opening balance on the 1st April 1930—		
Cash and Bank	43,030 11 1	
Fixed deposit in the National Bank of India, Limited, Chittagong ..	3,18,819 0 0	
		3,61,849 11 1
I. CONTROL	....	793 12 5
II. JETTIES	....	....
III. RENTABLE LANDS AND BUILDINGS	....	24,900 13 6
IV. PORT—		
Hire of moorings	43,219 6 0	
Mooring and unmooring fees	19,520 0 0	
Transport charges	4,840 0 0	
Boat license fees	4,924 8 0	
Receipts on account of water-supply	25,548 8 0	
Hire of heave-up boats and hawsers	16,718 0 0	
Fees for shifting vessels and of Harbour Masters	6,010 0 0	
Hire of launches and barges	6,910 0 0	
Interest on investment, etc.	48,351 6 3	
Other receipts	12,077 4 9	
		1,88,119 1 0
V. PORT APPROACHES—		
Port dues	83,941 12 0	
Ballam boat receipts	4,512 6 0	
Earnings of steamers, etc.	16,741 8 0	
Government grant for Kutubdia Lighthouse	4,200 0 0	
		1,09,395 10 0
VI. RIVER DUES	....	4,02,419 8 6
VII. CUSTOMS DUTY ON JUTE	....	12,683 8 0
Total Ordinary Income	....	7,38,312 5 5
SUSPENSE ACCOUNT—		
Stock	....	2,20,605 5 6
Stock purchases	....	1,03,208 7 3
Stock sales	....	4,586 3 3
Miscellaneous advances	....	3,60,400 4 3
Deposits	....	42,831 3 0
Total Suspense Account	....	7,31,691 7 3
Total	....	14,70,003 12 8
GRAND TOTAL	....	18,31,853 7 9

REVENUE ACCOUNT—*contd.*

Expenditure.

Particulars.	Amount. Rs. A. P.	Total. Rs. A. P.
I. CONTROL—		
Establishment	59,523 6 6	
Maintenance and repairs	853 11 1	
Miscellaneous	10,299 4 2	
		70,676 5 9
II. JETTIES	....	2,556 0 3
III. RENTABLE LANDS AND BUILDINGS	....	456 14 3
IV. PORT—		
Establishment	1,22,976 0 7	
Stores	22,379 10 9	
Maintenance and repairs	42,020 11 6	
Miscellaneous	20,032 1 6	
Police	13,034 4 8	
Port Health Department	4,560 4 0	
Works	1,106 2 3	
		2,26,109 3 3
V. PORT APPROACHES—		
Establishment	89,943 10 9	
Stores	1,02,110 8 7	
Maintenance and repairs	1,56,307 4 0	
Miscellaneous	111 15 6	
		3,48,473 6 10
Total Ordinary Expenditure	....	6,48,271 14 4
OTHER PAYMENTS—		
Principal (old loan)	25,087 2 0	
Interest (old loan)	11,085 9 0	
Interest on Rs. 20 lacs loan	99,066 12 0	
		1,35,239 7 0
Contribution to Capital Account	....	52,360 13 8
Interest on Rs. 57,000 for 1929-30 to Depreciation Fund (S. D. "Patunga" Account).	..	2,280 0 0
Total	....	1,89,880 4 8
SUSPENSE ACCOUNT—		
Stock	....	2,45,357 4 9
Stock purchases	....	97,325 12 9
Stock sales	....	4,457 11 0
Miscellaneous advances	....	3,77,540 12 3
Deposits	....	31,769 11 0
Total Suspense Account ..	....	7,56,451 3 9
Total	....	15,94,603 6 9
Closing balance on 31st March 1931—		
Cash and Bank	1,48,728 1 0	
Fixed deposit in the National Bank of India, Ltd., Chittagong ..	88,522 0 0	
		2,37,250 1 0
GRAND TOTAL ..	....	18,31,853 7 9

CAPITAL ACCOUNT.

Income.

Particulars.	Amount.			Total.		
	Rs.	A.	P.	Rs.	A.	P.
Opening balance on 1st April 1930	8,583	1	9			
Contribution from Revenue Account	52,360	13	8			
Government Loan	5,00,000	0	0			
Advance from Depreciation Fund	30,000	0	0			
Advance from Port Fund Revenue Account	75,000	0	0			
GRAND TOTAL	6,65,943	15	5			

Expenditure.

Met from Government Loans—						
Patunga Revetment	6,08,840	9	3			
Juldia Stone Apron	1,406	4	3			
Kolagaon Revetment	66	1	0			
				6,10,312	14	6
Met by transfer from Revenue Account—						
Juldia Beacon light	666	8	0			
New mooring materials	11,214	10	7			
Construction of a bund at Juldia	448	12	10			
Purchase of Messrs. Turner Morrison's land	326	3	0			
New quarters for Nautical Surveyor	37,676	1	0			
Increased office accommodation	938	3	0			
Improvement of Port land	57	12	0			
Dredger Chief Engineer's quarters	65	0	0			
Construction of a two-seated latrine at Monoharkhali	30	13	0			
Construction of a landing jetty at Feringhee Bazar	936	14	3			
				52,360	13	8
Closing balance on the 31st March 1931—						
Cash and Bank	3,270	3	3	3,270	3	3
GRAND TOTAL	....			6,65,943	15	5

MISCELLANEOUS (RESERVE) FUNDS.

Income.

Particulars.	Depreciation Fund.	Revenue Reserve Fund.	General Reserve Fund.		
	Rs.	Rs.	Rs.	A.	P.
Opening balance on 1st April 1930—					
Government Promissory Notes	96,992	74,859	17,912	4	1
Government Securities of 1934-37	3,30,750	94,500	47,250	0	0
Fixed deposits in the National Bank of India, Limited, Chittagong	96,204	..	22,994	0	0
Total	5,23,946	1,69,359	88,156	4	1
Interest on Rs. 57,000 for 1929-30—					
(S. D. "Patunga" Account)	2,280	..	..		
Transfer from Revenue Reserve Fund	82,212	..	..		
Total	84,492	..	..		
GRAND TOTAL ..	6,08,438	1,69,359	88,156	4	1

Expenditure.

Advance to Capital Account	30,000	..	..			
Transfer to Depreciation Fund	..	82,212	..			
Total	30,000	82,212	..			
Closing balance on 31st March 1931—						
Government Promissory Notes	96,992	74,859	17,912	4	1	
Government Securities of 1934-37	4,12,962	12,288	47,250	0	0	
Fixed deposits in the National Bank of India, Limited, Chittagong	68,484	..	22,994	0	0	
Total	5,78,438	87,147	88,156	4	1	
GRAND TOTAL ..	6,08,438	1,69,359	88,156	4	1	

R. L. BLISS,
Chairman, Port Commissioners, Chittagong (offg.).

Chittagong, the 22nd June 1931.

(1321—1)

LAND SALE NOTICE.

Advertisement of sale.

NOTICE is hereby given that the proprietary right of Government, as specified in the conditions of sale below, to the undermentioned estate situate in the district of 24-Parganas will be put up to sale at the 24-Parganas Collectorate on the 22nd July 1931, at 12 noon, corresponding with 6th Shraban 1338 B. S.

Conditions of sale.

1st.—The estate to be sold to the highest bidder above the upset price which will be fixed by the Collector at the time of sale. The purchaser of this estate will be considered as the proprietor of the estate and the entire proprietary right of the Government in such estate will be transferred to him revenue-free.

2nd.—The sale to be subject to existing leases and to the rights conferred by the settlement proceedings and by the laws in force and purchasers to be bound to respect the rights of resident cultivators who have signed the schedule of assessment prepared by Revenue authorities.

3rd.—One-fourth of the amount bid to be immediately deposited. If the balance be not paid by noon of the 15th day after the sale, reckoning the day of the sale as one or, if that day be a close holiday, then by noon of the first succeeding office day, the sale is to be cancelled (the sum deposited being forfeited to Government) and the estate to be again put up to sale at the risk of the defaulting purchaser, after issue of advertisement, as in the case of original sale.

Description of the property.

Khas khamar holding No. 28A, subdivision 16, division 1, apportaining to the Government estate Panchannogram, tauzi No. 1298-2834 with all structures thereon, known as Traffic Office building at Patipukur.

Area of the land—5 kattas.
Mauza—Kalidah, thana Dum Dum.
District—24-Parganas.
Sub-Registration district—Dum Dum.

K. L. MUKHARJI, Additional Collector.

Alipore, the 11th June 1931.

Erratum.

IN column 11 the boundary of lot No. 2 of mile No. 12 of D. L. Railway, in respect of the advertisement of sale published at page 505, Part II of the *Calcutta Gazette* of the 4th June 1931 *for* " 165 feet to 75 feet " *read* " 165 feet to 15 feet."

In column 6 of lot No. 1 of mile No. 15 of D. L. Railway, in respect of the advertisement of sale published at page 507, Part II of the *Calcutta Gazette* of the 4th June 1931 *for* the area " 20 b. 18 k. 2 ch. " *read* " 20 b. 18 k. 12 ch. "

K. L. MUKHARJI, Addl. Collector.

Alipore, the 22nd June 1931.

In the Court of the Sub-Judge of Dinajpur.

O. C. EXECUTION CASE No. 72 of 1930.

Panchanan Kesh and others, decree-holders,

versus

Kajema Bibi and others, judgment-debtors.

Date of sale—6th July 1931.

1. Lot Laskara bearing tauzi No. 178 of the Dinajpur Collectorate within pargana Shalbari and police-station Thakurgaon, revenue payable being Rs. 3,788-13-2 pies. Lashkara, Dhangaon and 15 as. 1 kara share of mauza Gunjargar being treated as 16 as. under amicable partition, the judgment-debtor's share is 5 as. of the $\frac{1}{16}$ of the aforesaid 16 as. plots. Average value, Rs. 100.

2. The eight annas share of lot Palashbari bearing tauzi No. 112 of the Dinajpur Collectorate, within pargana Shalbari and police-station Birganj, revenue payable being Rs. 7,824-10-9½. Tok Brahman Bhita, and mauzas Chapapara, Muchibari, Machhati, Faridpur, Bonar Bari, Hiramani, Mojkuri and eight annas share of Bishnupur, being treated as 16 as. under amicable partition, the judgment-debtor's share is 5 as. of $\frac{1}{16}$ of the aforesaid 16 as. plot. Average value, Rs. 100.

3. The eight annas share of lot Iakubpur bearing tauzi No. 185 of the Dinajpur Collectorate within pargana Shalbari and police-station Thakurgaon, revenue payable being Rs. 1,624 14 g. 1 kara for the share 4 as. 6 p. by amicable partition. One mauza of 13 as. 16 gandas share of kismat Geru, one mauza of 7 as. 13 gandas of kismat East Kachhubari, one mauza of 3 as. 2½ gandas of kismat Salandar and 5 as. share of $\frac{1}{16}$ of one mauza of Samiltok Ujiankhota within police-station Pirganj being treated as 16 annas.

4. The five annas share of the $\frac{1}{16}$ of eight annas being treated as 16 annas by amicable partition of lot Matigarea bearing tauzi No. 113 of the Dinajpur Collectorate within pargana Shalbari, police-station Thakurgaon, revenue payable being Rs. 1,157 5 as. 3 karas of 4 as. share of the whole tauzi.

5. The eight annas share of lot Tepagaon, tauzi No. 180 of the Dinajpur Collectorate within pargana Shalbari and police-station Thakurgaon, the revenue payable being Rs. 6,540 8 as. 19 g. Tepagaon, Chameshwari, Shamabari, Keshadanga, the 8 annas share of Thakurgaon, 10 annas share of Harinarayanpur, and 1 mauza of Shihipu within police-station Birganj being treated as 16 annas, the judgment-debtor's share is 5 as. of the $\frac{1}{16}$ of the aforesaid 16 annas plot.

6. The eight annas share of lot Gobindnagar, tauzi No. 182 of the Dinajpur Collectorate within pargana Shalbari, police-station Thakurgaon, the revenue payable being Rs. 6,553 8 as. 14½ g. Tok Prannagar, Nij Prannagar, Srikrishnapur, Auliapur, Rashulpur, Uttargaon, Lakshmipur, the one mauza of the 2 as. 8½ gandas share of Debipur, Goalpara, Rahimpur and 1 mauza of Rolbari and Shimulbari within police-station Pirganj being treated as 16 as., the judgment-debtor's share is 5 as. of the $\frac{1}{16}$ of the aforesaid 16 as. plot.

7. The eight annas share of lot No. Doulatpur, bearing tauzi No. 157 of the Dinajpur Collectorate, within pargana Madanabati, police-station Gangarampur, revenue payable Rs. 2,538 11 gandas. Tok Doulatpur, Nij Doulatpur, Muktarampur, Mushibari, Dhatra, Jharpukur, the 2 as. 18 gandas 15 kag of kismat Bikri, 8 annas of Rajratpur, 7 as. 14 gandas 11 kags of kismat Purali, 15 as. 4 gandas 6 kags of Golshat, Chakshahabali, Shekpur, Bhatkhanda, Pachpara, Singhari, Baje Singhari, 1 a. 7 g. 15 kag. of kismat Augaran and 2 as. share of kismat Sahapur being treated as 16 as. under amicable partition, the judgment-debtor's share is 5 as. of the $\frac{1}{16}$ of the aforesaid 16 as. plot.

8. The eight annas share of lot No. Gerul, tauzi No. 168 of the Dinajpur Collectorate within pargana Rajnagar, police-station Gangarampur, revenue payable being Rs. 206 13 as. 3½ g. Tok Gerul nij, 8 as. of kismat Gerul, 4 as. 12 g. 2 kara 15 til of kismat Mirhati, 4 as. of kismat Rangamati, being treated as 16 as., the judgment-debtor's share is 5 as. of $\frac{1}{16}$ of the aforesaid 16 as. plot. Value Rs. 100.

9. The eight annas share of lot Amilash, tauzi No. 159 of the Dinajpur Collectorate within pargana Rajnagar, police-station Gangarampur, revenue payable Rs. 258-8-1-1, Amilash nij, 8 as. of kismat Amilash being treated as 16 as., the judgment-debtor's share is 5 as. of the $\frac{1}{16}$ of the aforesaid 16 as. plot.

10. The eight annas share of lot Ranipur, tauzi No. 425 of the Dinajpur Collectorate within pargana Rajnagar, police-station Gangarampur, revenue payable being Rs. 40,260-1. Tok Eshahabpur, Nij Eshahabpur, Jot Eshabpur, Jot Hashabpur, Ganigasha, Haripur, Haldi, 8 as. of Gararpura, 4 as. of kismat Bagdobar, Shekpur, Molnapur, Rasulpur, Bahirpur, Aligar, Nimsar, Dainpara, Fatepur, Nish Baisya, 3 as. 9 g. 3 karas share of kismat Kair, 8 as. of kismat Shahinadir, Mirjapur, Joydebpur, Dhanda, Bahirpur, 4 as. of Ranipur, Bhimdanga, Kharibapura, Fatenagar being treated as 16 as., the judgment-debtor's share is 5 as. of the $\frac{1}{16}$ of the aforesaid 16 as. plot.

11. The eight annas share of lot Chak Ramkrisnapur, tauzi No. 179 of the Dinajpur Collectorate, pargana Kardaha, police-station Gangarampur, revenue payable being Rs. 1,174 8 g. 2 kara. Tok Shiskon, Nij Shiskon, Raichanda, 8 as. of Pahari Pukura, 8 as. of Moherar, 8 as. of Baikunthapur, Chak Ram Kristapur, Dobakailya, Kartikpur, Aulia band, Lohari, 2 as. of Pathargati, being treated as 16 as., the judgment-debtor's share is 5 as. of the $\frac{1}{16}$ of the aforesaid 16 as. plot.

12. The eight annas share of lot Safinagar, tauzi No. 462 of the Dinajpur Collectorate, pargana Karadaha, police-station Patiram, revenue payable being Rs. 7,637-8-6 g. Tok Safinagar, 15 as. 6 p. share of Nij Safinagar, 15 as. 6 p. of Katuna, 15 as. 6 p. of Adiga, Parshahajadpur, Patil Pushkrim, Chak Sadar, Tolpara, Chak Radamadhab, Kristadebpur, Sahajadpur, Kheriar, 7 as. 15 g. share of Kamdebpur Mai Chandri, 7 as. 15g. of Brahmanpur Mai Chandri, 15 as. 6 p. of Dalpara, Piarpur, 13 as. 12g. of Uchhain, 15 as. 6 p. of Aichhara, Chakadon, being treated as 16 as., the judgment-debtor's share is 5 as of the 9 gandas 6 kags being treated as 16 as. of the aforesaid plot.

A. L. BANERJEE, Sub-Judge.

Dinajpur, the 12th June 1931. (1258—1)

In the Court of the Sub-Judge of Birbhum.

TITLE EXECUTION CASE No. 7 OF 1931.

Nilkantha Ghosal of Kamal, chowki Katwa, zilla Burdwan, decree-holder,

versus

Panchanan Ghose and others of Dakshineswar, residing at present at Sainthia, chowki Suri, district Birbhum, judgment-debtors.

THE following property of the judgment-debtors will be sold in auction sale on 1st August 1931 at 12 noon by the Nazir of the Court in the Court sale room for realisation of Rs. 1,57,787-8, the decretal amount together with costs and interest.

Schedule of Property.

Four annas share of zamindari right of lot Sainthia, together with all mouzas and chaks bearing touzi No. 22 of the Birbhum Collectorate and including reclaimed and waste lands, rivers, water-passages, *bil*, *jhil*, ditches, markets, roads, places where cattle is gathered for sale, and interest known as *Go-mahal*, *Laha-mahal*, *Loha-mahal*, *Bankar*, *Jalkar* (fishery right), *Falkar*, etc., *Darbast Hak-Hakuk* with super-soil and under-soil interests bearing revenue Rs. 15,168-8 in 16 as. share as also proportionate share of Chaukidari Chakran lands therein.

A. C. GANGULY, Sub-Judge.

Suri, the 23rd June 1931. (1320—1)

In the High Court of Judicature at Fort William in Bengal, in insolvency.

NOTICE OF ADJUDICATION ORDER.

No. 144 OF 1931.

Re Subal Chandra Dawn, residing at No. 6B, Butto Kristo Lane, in the town of Calcutta, an employee of Messrs. B. K. Paul & Co. in Calcutta aforesaid, *ex parte* the debtor.

G. B. Chatterjee, debtor's solicitor.

ON the 17th day of June 1931, an order was made by the High Court of Judicature at Fort William in Bengal in its insolvency jurisdiction adjudging the abovenamed as an insolvent.

NOTE.—All debts due to the estate should be paid to me.

Dated this 24th day of June 1931.

G. M. FALKNER, Official Assignee.

In the High Court of Judicature at Fort William in Bengal, in insolvency.

NOTICE OF ADJUDICATION ORDER.

No. 145 OF 1931.

Re Percy D'Santos, residing at No. 25, Weston Street, in the town of Calcutta, employed as a gunner by Messrs. George Henderson & Co. at 101-1, Clive Street, Calcutta, *ex parte* the debtor in person.

ON the 17th day of June 1931, an order was made by the High Court of Judicature at Fort William in Bengal in its insolvency jurisdiction adjudging the abovenamed as an insolvent.

NOTE.—All debts due to the estate should be paid to me.

Dated this 24th day of June 1931.

G. M. FALKNER, Official Assignee.

In the High Court of Judicature at Fort William in Bengal, in insolvency.

NOTICE OF ADJUDICATION ORDER.

No. 146 OF 1931.

Re Lachminarain Chaudhuri *alias* Lachminarain Marwari, residing at 16-2, Armenian Street in the town of Calcutta, and lately carrying on business at No. 1, Narain Prosad Babu Lane in Calcutta aforesaid, in linseed and jute, at present a service-holder, *ex parte* the debtor.

B. K. Mukherjee, debtor's solicitor.

ON the 17th day of June 1931, an order was made by the High Court of Judicature at Fort William in Bengal in its insolvency jurisdiction adjudging the abovenamed as an insolvent.

NOTE.—All debts due to the estate should be paid to me.

Dated this 24th day of June 1931.

G. M. FALKNER, Official Assignee.

In the High Court of Judicature at Fort William in Bengal, in insolvency.

NOTICE OF ADJUDICATION ORDER.

No. 147 OF 1931.

Re Robert Claude Matthews, residing at No. 14, Wellesley 2nd Lane, in the town of Calcutta, lately employed as an assistant by the Burmah Shell Oil Storage and Distributing Co., Ltd., Hong Kong House, Dalhousie Square, South, Calcutta, and at present being unemployed, *ex parte* the debtor in person.

ON the 18th day of June 1931, an order was made by the High Court of Judicature at Fort William in Bengal in its insolvency jurisdiction adjudging the abovenamed as an insolvent.

NOTE.—All debts due to the estate should be paid to me.

Dated this 25th day of June 1931.

G. M. FALKNER, Official Assignee.

In the High Court of Judicature at Fort William in Bengal, in insolvency.

NOTICE OF ADJUDICATION ORDER.

No. 148 OF 1931.

Re Antoine Jean Marie Chamonard, residing at No. 204, Lower Circular Road, in the suburbs of the town of Calcutta, and carrying on business as importer of building and decorative materials under the name, style and firm of A. Chamonard at No. 11, Clive Street, in the town of Calcutta, *ex parte* the debtor.

Satish Chandra Bose, debtor's solicitor.

ON the 18th day of June 1931, an order was made by the High Court of Judicature at Fort William in Bengal in its insolvency jurisdiction adjudging the abovenamed as an insolvent.

NOTE.—All debts due to the estate should be paid to me.

Dated this 25th day of June 1931.

G. M. FALKNER, Official Assignee.

In the High Court of Judicature at Fort William in Bengal, in insolvency.

NOTICE OF ADJUDICATION ORDER.

No. 149 OF 1931.

Re Chork Ping, residing at No. 26, Chattawalla Gullee, in the town of Calcutta, lately carrying on business of eating house and restaurant under the name, style and firm of Canton Restaurant at Nos. 7 and 7/1, Sooterkin's Lane, in Calcutta aforesaid, at present of no occupation, *ex parte* the debtor.

Kar Meh'a & Co., debtor's solicitors.

ON the 18th day of June 1931, an order was made by the High Court of Judicature at Fort William in Bengal in its insolvency jurisdiction adjudging the abovenamed as an insolvent.

NOTE.—All debts due to the estate should be paid to me.

Dated this 25th day of June 1931.

G. M. FALKNER, Official Assignee.

NOTICE TO CREDITORS OF THE DATE OF HEARING OF AN INSOLVENCY PETITION.

Section 19 of the Provincial Insolvency Act, V of 1920.

In the Court of the District Judge at Chittagong.

INSOLVENCY APPLICATION No. 17 OF 1931.

WHEREAS Abdul Aziz, son of Sagor Ali of Barahatia, police-station Satkania, has applied to this Court by a petition, dated 7th day of May 1931, to be declared an insolvent under the Provincial Insolvency Act, V of 1920, this is to give notice to his creditors that the Court has fixed the 23rd day of July 1931 for the hearing of the aforesaid petition and the examination of the debtor.

J. YOUNIE, District Judge.

(1266—1—1343)

NOTICE TO CREDITORS OF THE DATE OF HEARING OF AN INSOLVENCY PETITION.

Section 19 of the Provincial Insolvency Act, V of 1920.

In the Court of the District Judge at Chittagong.

INSOLVENCY APPLICATION No. 19 OF 1931.

WHEREAS Ramesh Chandra De, son of Kailash Chandra De of Rangunia, police-station Rangunia, Chittagong, has applied to this Court by a petition, dated 21st day of May 1931, to be declared an insolvent under the Provincial Insolvency Act, V of 1920, this is to give notice to his creditors that the Court has fixed the 3rd day of August 1931 for the hearing of the aforesaid petition and the examination of the debtor.

J. YOUNIE, District Judge.

Chittagong, the 16th June 1931. (1283—1—1344)

In the Court of the District Judge of Hooghly.

NOTICE is hereby given, under clause (2) of section 12 of the Provincial Insolvency Act, V of 1920, to his creditors that the insolvency petition of Banku Behari Sur and Nilmoni Sur, sons of late Dino Nath Sur, of Bhadreswar, thana Bhadreswar, district Hooghly, has been admitted by this Court as No. 38 of 1931 and that the 14th July 1931 has been fixed for the hearing thereof.

[ILLEGIBLE], Sub-Judge in charge.

Chinsura, the 16th June 1931. (1314—1—1325)

In the Court of the District Judge of Mymensingh.

INSOLVENCY CASE No. 26 OF 1931.

Kishoreganj Loan Office, Limited, creditor-petitioner,

versus

Nagarbashi Saha, debtor, opposite party.

ON the application of Kishoreganj Loan Office, Limited, a creditor against his debtor Nagarbashi Saha, son of late Ram Narsinha Saha, of Kabutarbaj known as Char Shulakia, police-station Kishoreganj, district Mymensingh, for adjudicating the said debtor an insolvent, notice is hereby given to all his creditors that the said petition has been admitted and that the 18th July 1931 has been fixed for hearing the case.

R. F. LODGE, District Judge.

Mymensingh, the 22nd June 1931. (1325—1)

ORDER OF DISCHARGE.

Section 41 (2) (*a*) of the Provincial Insolvency Act, V of 1920.

In the Court of the District Judge of Pabna and Bogra.

INSOLVENCY CASE No. 37 OF 1928.

PURSUANT to a petition for discharge, filed on 24th November 1930, by the insolvent Panchu Pramanik, son of late Sarup Pramanik of Masimpur, police-station and district Pabna, and upon examining him and on taking into consideration the reports of the receiver as to the insolvent's conduct and affairs, it is ordered that the said insolvent is granted absolute discharge.

K. C. CHUNDER, District Judge.

Pabna, the 20th June 1931. (1322—1)

In the Court of the District Judge of Pabna and Bogra.

INSOLVENCY CASE No. 31 OF 1931.

WHEREAS the creditor Anath Bondhu Saha of Malanchi, police-station and district Pabna, has applied to this Court by a petition, dated 12th May 1931, for declaring Kshiroda Sundari Dassya, widow of late Tirthanath Saha, debtor, of Pabna town, an insolvent, this is to give notice to all other creditors that the Court has fixed 24th July 1931 for hearing of the aforesaid petition and for examination of the above debtor.

R. B. BARMAN, Sub-Judge in charge.

Pabna, the 23rd June 1931. (1323—1)

In the Court of the District Judge of Rajshahi.

INSOLVENCY CASE No. 130 OF 1929.

NOTICE is hereby given that Krisnadhan Shaha of Komarpur, police-station Badalgachi, district Rajshahi, has applied under Act V of 1920 for his discharge and that 9th July 1931 is fixed for hearing of the application.

G. G. HOOPER, District Judge.

Rajshahi, the 15th June 1931. (1311 1 1328)

In the Court of the District Judge of Rajshahi.

INSOLVENCY CASE No. 32 OF 1931.

NOTICE is hereby given that Ataruddin Mistri of Lamu Sankarbati, police-station Nawabganja, district Malda, has applied under Act V of 1920 to be adjudicated an insolvent and that 14th July 1931 is fixed for hearing of the application.

G. G. HOOPER, District Judge.

Rajshahi, the 15th June 1931. (1312—1 1327)

In the Court of the District Judge of Rajshahi.

INSOLVENCY CASE No. 34 OF 1931.

NOTICE is hereby given that Mani Lal Chaudhuri of Naogaon, police-station Naogaon, district Rajshahi, has applied under Act V of 1920 to be adjudicated an insolvent and that 18th July 1931 is fixed for hearing of the application.

G. G. HOOPER, District Judge.

Rajshahi, the 18th June 1931. (1313—1—1326)

ORDER OF ADJUDICATION.

Section 27 of the Provincial Insolvency Act, V of 1920.

In the 4th Court of the Sub-Judge at Alipore.

INSOLVENCY APPLICATION No. 211 OF 1930.

PURSUANT to a petition, dated 5th June 1930, filed by Abu Taher *alias* Taher Hossein of 40, Raza Bazar, Beliaghata, 24-Parganas, debtor, and on the application of the debtor himself and on reading his application and hearing his pleader it is ordered that the debtor be and the said debtor is hereby adjudged insolvent.

It is further ordered that the debtor do apply for his discharge within six months from this date.

Dated this 27th day of May 1931.

S. N. ROY, Sub-Judge.

(1242—1—1339)

ORDER OF ADJUDICATION.

Section 27 of the Provincial Insolvency Act, V of 1920

In the 4th Court of the Sub-Judge at Alipore.

INSOLVENCY APPLICATION No. 44 OF 1931.

PURSUANT to a petition, dated 26th January 1931, filed by Shaik Elahi Bux of 47, Nazir Lane, Watgunj, 24-Parganas, debtor, and on the application of the debtor himself and on reading his application and hearing his pleader, it is ordered that the debtor be and the said debtor is hereby adjudged insolvent.

It is further ordered that the debtor do apply for his discharge within six months from this date.

Dated this 9th day of June 1931.

S. N. ROY, Sub-Judge.

(1287—1—1329)

ORDER OF ADJUDICATION.

Section 27 of the Provincial Insolvency Act, V of 1920.

In the 4th Court of the Sub-Judge at Alipore.

INSOLVENCY APPLICATION No. 80 OF 1931.

PURSUANT to a petition, dated 23rd February 1931, filed by Pronath Bag of 13/1, Kundu Lane, Bhowanipore, 24-Parganas, debtor, and on the application of the debtor himself and on reading his application and hearing his pleader, it is ordered that the debtor be and the said debtor is hereby adjudged insolvent.

It is further ordered that the debtor do apply for his discharge within six months from this date.

Dated this 27th day of May 1931.

S. N. ROY, Sub-Judge.

(1288—1—1330)

ORDER OF ADJUDICATION.

Section 27 of the Provincial Insolvency Act, V of 1920.

In the 4th Court of the Sub-Judge at Alipore.

INSOLVENCY APPLICATION No. 85 OF 1931.

PURSUANT to a petition, dated 24th February 1931, filed by F. D'Silva of 83, Traffic Quarters, Sealdah, 24-Parganas, debtor, and on the application of the debtor himself and on reading his application and hearing his pleader, it is ordered that the debtor be and the said debtor is hereby adjudged insolvent.

It is further ordered that the debtor do apply for his discharge within six months from this date.

Dated this 9th day of June 1931.

S. N. ROY, Sub-Judge.

(1289—1—1331)

ORDER OF ADJUDICATION.

Section 27 of the Provincial Insolvency Act, V of 1920.

In the 4th Court of the Sub-Judge at Alipore.

INSOLVENCY APPLICATION No. 113 OF 1931.

PURSUANT to a petition, dated 18th March 1931, filed by Nagendranath Sanfui, of Rajarampur, Falta, 24-Parganas, debtor, and on the application of the debtor himself and on reading his application and hearing his pleader, it is ordered that the debtor be and the said debtor is hereby adjudged insolvent.

It is further ordered that the debtor do apply for his discharge within six months from this date.

Dated this 9th day of June 1931.

S. N. ROY, Sub-Judge.

(1290—1—1332)

ORDER OF ADJUDICATION.

Section 27 of the Provincial Insolvency Act, V of 1920.

In the 4th Court of the Sub-Judge at Alipore.

INSOLVENCY APPLICATION No. 121 OF 1931.

PURSUANT to a petition, dated 26th March 1931, filed by Rasamoy Shaha of Nabalganj, 24-Parganas, debtor, and on the application of the debtor himself and on reading his application and hearing his pleader, it is ordered that the debtor be and the said debtor is hereby adjudged insolvent.

It is further ordered that the debtor do apply for his discharge within six months from this date.

Dated this 9th day of June 1931.

S. N. ROY, Sub-Judge.

(1291—1—1333)

ORDER OF ADJUDICATION.

Section 27 of the Provincial Insolvency Act, V of 1920.

In the 4th Court of the Sub-Judge at Alipore.

INSOLVENCY APPLICATION No. 125 OF 1931.

PURSUANT to a petition, dated 28th March 1931, filed by Satish Chandra Neogy of 10, Onrait 1st Lane, Entally, 24-Parganas, debtor, and on the application of the debtor himself and on reading his application and hearing his pleader, it is ordered that the debtor be and the said debtor is hereby adjudged insolvent.

It is further ordered that the debtor do apply for his discharge within six months from this date.

Dated this 9th day of June 1931.

S. N. ROY, Sub-Judge.

(1292—1—1334)

NOTICE TO CREDITORS OF APPLICATION FOR DISCHARGE.

Section 41(*1*) of the Provincial Insolvency Act, V of 1920.

In the 4th Court of the Sub-Judge at Alipore.

INSOLVENCY CASE No. 249 OF 1930.

Jatindranath Kar of 6-2, Olai Chand Road, Chitpore, 24-Parganas, applicant.

TAKE notice that the abovenamed insolvent has applied at the Court for his discharge, and that the Court has fixed the 6th day of July 1931, at 11 o'clock, for hearing the application.

Dated this 5th day of June 1931.

S. N. ROY, Sub-Judge.

(1293—1—1340)

NOTICE TO CREDITORS OF APPLICATION FOR DISCHARGE.

Section 41 (*1*) of the Provincial Insolvency Act, V of 1920.

In the 4th Court of the Sub-Judge at Alipore.

INSOLVENCY CASE No. 287 OF 1930.

Amira Mistry of Titagar, 24-Parganas, applicant.

TAKE notice that the abovenamed insolvent has applied at the Court for his discharge, and that the Court has fixed the 6th day of July 1931, at 11 o'clock, for hearing the application.

Dated this 5th day of June 1931.

S. N. ROY, Sub-Judge.

(1295—1—1341)

NOTICE TO CREDITORS OF APPLICATION FOR DISCHARGE.

Section 41(*1*) of the Provincial Insolvency Act, V of 1920.

In the 4th Court of the Sub-Judge at Alipore.

INSOLVENCY CASE No. 344 OF 1930.

Shaik Nanney of Bangali Bazar, Metiaburuz, applicant.

TAKE notice that the abovenamed insolvent has applied at the Court for his discharge, and that the Court has fixed the 13th day of July 1931, at 11 o'clock, for hearing the application.

Dated this 11th day of June 1931.

S. N. ROY, Sub-Judge.

(1296—1—1342)

In the 4th Court of the Sub-Judge of 24-Parganas.

INSOLVENCY CASE No. 148 OF 1931.

Mata Prasad Singh of 58-4, Raja Dinendra Narayan Street, Boliaghata, 24-Parganas, applicant.

To Ganesh Das Ram Gopal of 3, Dacres Lane, Calcutta, and others, creditors.

ON the 8th day of June 1931 it was ordered that the matter of the petition of the applicant be heard on the 13th day of July 1931 and that the said applicant do attend to be examined by this Court on that date.

S. N. ROY, Sub-Judge.

Alipore, the 11th June 1931. (1297—1—1335)

In the 4th Court of the Sub-Judge of 24-Parganas.

INSOLVENCY CASE No. 214 of 1931.

Mohabir Kurmi of Gouripore, Naihati, 24-Parganas, applicant.

To Saharat Upadhaya of Masjid Bagan, Gouripore, Naihati, 24-Parganas, and others, creditors.

ON the 10th day of June 1931 it was ordered that the matter of the petition of the applicant be heard on the 13th day of July 1931 and that the said applicant do attend to be examined by this Court on that date.

S. N. Roy, Sub-Judge.

Alipore, the 12th June 1931. (1298—1—1336)

In the 4th Court of the Sub-Judge of 24-Parganas.

INSOLVENCY CASE No. 218 of 1931.

Hari Lall of Tollygunge, 24-Parganas, applicant.

To Bal Chand Motha of Chanditola, Tollygunge, and others, creditors.

ON the 10th day of June 1931 it was ordered that the matter of the petition of the applicant be heard on the 13th day of July 1931 and that the said applicant do attend to be examined by this Court on that date.

S. N. Roy, Sub-Judge.

Alipore, the 11th June 1931. (1299—1—1337)

In the 4th Court of the Sub-Judge of 24-Parganas.

INSOLVENCY CASE No. 220 of 1931.

Abdul Jabbar of Baga, N'para, Moheshtola, 24-Parganas, applicant.

To Batuka Khan of Circular Garden Reach Road, Kidderpore, 24-Parganas, and others, creditors.

ON the 10th day of June 1931 it was ordered that the matter of the petition of the applicant be heard on the 13th day of July 1931 and that the said applicant do attend to be examined by this Court on that date.

S. N. Roy, Sub-Judge.

Alipore, the 12th June 1931. (1300—1—1338)

ORDER ANNULLING ADJUDICATION.

Section 43 of the Provincial Insolvency Act, V of 1920.

In the 4th Court of the Sub-Judge at Alipore.

INSOLVENCY APPLICATION No. 205 of 1930.

Moula Buksh, applicant.

WHEREAS Maula Buksh of Khardah, district 24-Parganas, does neither appear nor apply for his discharge within the specified time fixed for hearing, it is ordered that the order of adjudication, dated 16th December 1930, against the debtor be and the same is hereby annulled.

Dated this 16th day of June 1931.

S. N. Roy, Sub-Judge.

ORDER ANNULLING ADJUDICATION.

Section 43 of the Provincial Insolvency Act, V of 1920.

In the 4th Court of the Sub-Judge at Alipore.

INSOLVENCY APPLICATION No. 209 of 1930.

Habibulla Lasker, applicant.

WHEREAS Habibulla Lasker, of Latibpur, police-station Begumgunge, district Noakhali, does neither appear nor apply for his discharge within the specified time fixed for hearing, it is ordered that the order of adjudication, dated 16th December 1930, against the debtor be and the same is hereby annulled.

Dated this 16th day of June 1931.

S. N. Roy, Sub-Judge.

ORDER ANNULLING ADJUDICATION.

Section 43 of the Provincial Insolvency Act, V of 1920.

In the 4th Court of the Sub-Judge at Alipore.

INSOLVENCY APPLICATION No. 334 of 1930.

Behari Ahir, applicant.

WHEREAS Behari Ahir of Hazinagar, police-station Naihati, does neither appear nor apply for his discharge within the specified time fixed for hearing, it is ordered that the order of adjudication, dated 16th December 1930, against the debtor be and the same is hereby annulled.

Dated this 16th day of June 1931.

S. N. Roy, Sub-Judge.

ORDER ANNULLING ADJUDICATION.

Section 43 of the Provincial Insolvency Act, V of 1920.

In the 4th Court of the Sub-Judge at Alipore.

INSOLVENCY APPLICATION No. 341 of 1930.

Babua Show, applicant.

WHEREAS Babua Show of 294, Kalighat Road, police-station Bhowanipur, does neither appear nor apply for his discharge within the specified time fixed for hearing, it is ordered that the order of adjudication, dated 16th December 1930, against the debtor be and the same is hereby annulled.

Dated this 16th day of June 1931.

S. N. Roy, Sub-Judge.

CHAPALA KANTA BHATTACHARYYA, B.A., B.L., intends to be enrolled as an Advocate, High Court.

(1222—4—1238)

KRISHNAPADA CHATTERJEE, B.L., intends to be enrolled as an advocate of the Calcutta High Court.

(1208—4—1278)

Public Service Commission (India).

APPLICATIONS are invited from candidates of not more than 35 years of age for two posts of Assistant Superintendent, Archæological Survey of India. For one of the posts a candidate must be a statutory native of India holding a degree in History, have a knowledge of some period of early Indian History and be proficient in Persian or Arabic or Sanskrit. Preference will be given to candidates who have done original research work in some branch of Archæology. For the other post a candidate must be a British subject and should be an A.R.I.B.A., or an A.I.I.A. Preference will be given to a candidate who possesses a degree in Arts besides architectural qualifications.

The selected candidates will be on probation for a period of two years on Rs. 350 per mensem during the first year and Rs. 400 per mensem during the second year. At the end of this period of satisfactory service they will be permanently retained on such scale of pay as may be prescribed for officers of their rank in the Archæological Department.

Further particulars and application forms may be obtained by persons applying for them to the Secretary, Public Service Commission, on or before the 13th July 1931.

A. G. Dix, Secretary.

Simla, the 23rd June 1931. (1370—1)

APPLICATIONS are invited for the temporary vacancy in the gazetted post of Entomologist under the Bengal Public Health Department for the present for one year from the 1st October 1931. The sanctioned scale of pay of the post is Rs. 250 25—500—50—750. Qualifications—A university degree in Science or Medicine with special training in Medical Entomology. Age not to exceed 40 years on the 1st October 1931. Canvassing disqualifies. Applications will be received not later than the 31st August by the Director of Public Health, Bengal, Writers' Buildings, Calcutta.

APPLICATIONS are invited for some posts of probationers and temporary clerks for the Civil Courts of this district, the scale in the case of probationers being Rs. 35—35-40—2-68-3/2—80 and the temporary clerks drawing Rs. 35 per month. Candidates should not be over 25 years of age and should have at least passed the Matriculation Examination. A candidate must submit with his application a certificate of good moral character from the school or college in which he has last been educated or from some respectable house-holder to whom he is well known in private life and who is himself known to a respectable officer of Government, the last fact being certified by the countersignature of the officer in question. Applications will be received by the undersigned up to 25th July 1931. Canvassing in any form will disqualify a candidate.

J. DE, District Judge.

Burdwan, the 27th June 1931.

WANTED a Treasurer for the Nadia Treasury at Krishnagar on a time-scale pay of Rs. 125—5—175 per mensem. The post will fall vacant on the 16th July 1931.

Applications will be received by the undersigned up to the 6th July 1931. The selected candidate will have to furnish a cash security in Government Promissory notes to the actual value of Rs. 15,000. None need apply who is not a matriculate.

T. C. ROY, Collector.

Nadia, the 17th June 1931.

WANTED a clerk for the office of the Inspectress of Schools, Presidency and Burdwan Divisions, in the scale of Rs. 35—35-40—2—68—3/2—80. Must be an I. A., or I. Sc., with knowledge of typewriting. Apply stating qualifications, experience, age, etc. Preference will be given to a qualified Moslem candidate. The claims of departmental officers who apply for the post will receive special consideration. Selected candidate will be required to join on the 26th July 1931.

Applications will be received by the undersigned up to 6th July 1931.

H. BOSE, Inspectress of Schools,

Presidency and Burdwan Divisions (offg.).

2, Norton Buildings, Calcutta, the 10th June 1931.

Office of the Inspectress of Schools, Dacca Circle.

APPLICATIONS are invited for the post of a clerk, office of the Assistant Inspectress of Schools, Rajshahi, Division (Rajshahi), or of that of the Assistant Inspectress of Schools, Chittagong Division (Chittagong), on a monthly pay of Rs. 35 in the grade of Rs. 35—35—40—2-2—60.

2. None need apply who has not passed the I.A. or I.Sc. Examination of the Indian Universities.

3. The applications must be in handwriting of the candidates and copies of University certificates, especially of the Matriculation and Intermediate Examinations, as also of certificates of good moral character from the colleges in which they have last educated must accompany the applications.

4. Preference will be given to Muhammadan candidates or candidates of backward and other communities with high University qualifications. Knowledge of typewriting is essential.

5. Applications will be received by the undersigned up to the 30th June 1931, inclusive.

M. V. WOODTHORPE,

Inspectress of Schools, Dacca Circle.

Ramna, Dacca, the 6th June 1931.

Notice.

SEALED tenders are invited in the open market for a loan of Rs. 40,000 by the District Board of Faridpur for raising and widening the Faridpur Bazar bridge under section 50 of the Bengal Local Self-Government Act on the security of the District Fund of Faridpur which is held under Act III (B.C.) of 1885. The fund consists of Road and Public Works Cess of the district, Government grants and other miscellaneous receipts and it is under the custody of the Collector of Faridpur. The raising of loan has been duly sanctioned by the Government of Bengal in their letter No. 78 T.P.H., dated the 23rd May 1931. The loan shall bear an interest not exceeding 8 per cent. per annum and it shall be repaid in ten equal annual instalments, each payable on the 15th June each year till the loan is paid off. Tenders offering the lowest rate of interest will be given preference.

Tenders will be received by the undersigned up to the 15th July 1931.

A. CHOWDHRY (KHAN BAHADUR), M.L.C.,
Chairman, District Board.

Faridpur, the 26th June 1931. (1372-2)

Imperial Bank of India.

THE following appointments on the Bank's Staff are hereby notified :—

Mr. R. D. Worling, M. C., to be Agent, Jamshedpur Branch, as from the 29th May 1931, *vice* Mr. F. G. White.

Mr. E. R. Marshall was in charge of Myingyan Branch from the 11th April to the 14th May 1931, inclusive, *vice* Mr. W. Hannagan.

Mr. R. R. Seth was in charge of Muttra Branch from the 10th May to the 15th June 1931, inclusive, *vice* Mr. J. N. Mirotra.

Mr. J. S. Mongia was in charge of Muzaffarnagar Branch from the 12th to the 30th May 1931, inclusive, *vice* Mr. Jia Lal.

Mr. Nirmal Singh to be Clerk-in-charge, Gulmarg Pay Office, re opened for the Season on the 8th June 1931.

Mr. J. W. Shepard was in charge of Delhi Branch from the 20th to the 22nd May 1931, inclusive, and again from the 25th May to the 14th June 1931, inclusive, *vice* Mr. H. A. Page.

Mr. W. F. Donechy was in charge of Lucknow Branch on the 25th and the 26th May 1931, *vice* Mr. M. B. Clemens.

Mr. C. L. Talwar was in charge of Meerut Branch from the 23rd to the 26th May 1931, inclusive, *vice* Mr. E. F. Hailstone, M. C.

Mr. R. K. De was in charge of Moradabad Branch on the 25th and the 26th May 1931, *vice* Mr. W. R. Tapper.

Mr. L. N. Varma was in charge of Sargodha Branch on the 25th and the 26th May 1931, *vice* Mr. R. D. Ahluwalia.

Mr. Girdhar Das Seth was in charge of Kosi Kalan Pay Office on the 23rd May 1931, and again on the 8th and 9th June 1331, *vice* Mr. Devi Pershad.

Mr. J. H. Bailey was in charge of Lahore Branch on the 30th May 1931, *vice* Mr. C. N. Nixon.

Mr. Mangal Sen was in charge of Ludhiana Branch on the 25th and 26th May 1931, *vice* Mr. Mokand Lal.

Mr. G. D. Puri was in charge of Lyallpur Branch on the 30th May 1931, *vice* Mr. R. R. Wisher.

Mr. J. MacLeod was in charge of Allahabad Branch on the 25th and 26th May 1931, *vice* Mr. A. H. Johnston.

Mr. Gopal Krishna Rao to be Clerk-in-charge, Benares City Pay Office, as from the 30th May 1931, *vice* Mr. H. D. Chatterjee.

M. G. STUART,
Secretary and Treasurer.

Calcutta, the 22nd June 1931. (1318—1)

THE Bengal and Madras Service Family Pension Fund which is provisionally managed and assisted by Government has for its object the provision of monthly pensions for the maintenance of the widows and children of subscribers and is open, with certain exceptions, to all active and pensioned members of the Uncovenanted service of Government (except those serving under the Government of Bombay), and to Local Fund servants earning pensions from Government. Some of the special features of the fund are—(1) that widowed daughters incapable of remarriage or children labouring under such mental or bodily infirmities as incapacitate them from earning their livelihood or preclude the possibility of marriage (in case of a daughter) are admitted to its benefits; and (2) that subscribers to the Widows' and Daughters' branches are entitled to a refund of 30 per cent. of the premia paid, should the nominee predecease them after five years of admission. The second quinquennial valuation of the Fund has been completed by the actuary to the Government of India, and his report discloses very favourable results. For forms of application and rules of the Fund apply to the Accountant-General, Bengal, Imperial Secretariat Buildings, Calcutta.

Sale Notice.

Young Mokna Elephant for sale at Chittagong.

AGE about 7 years, Dohara band (Mirka band), full tail, 18 nails, present height 5 feet, caught in December 1929 in kheda, partly trained. Can be let loose to graze in the forests. Can be seen at Dhoom, Assam-Bengal Railway Station, on one week's notice being given.

Apply to Divisional Forest Officer, Chittagong, Assam-Bengal Railway.

Tele. Address—Divfo, Chittagong.

The 23rd June 1931.

NOTICE.

Government of India.

ARMY DEPARTMENT.

THE services of pensioned and discharged Indian Officers and soldiers required for employment in civil capacities may be obtained on application to—

(i) The Recruiting Officers of the class required at the following stations—

(*a*) Mussalmans—

Peshawar for Pathans; Rawalpindi, Lahore and Jullundur for Punjabi Mussalmans; Ajmer for Rajputana Mussalmans and Poona for Dekhani Mussalmans.

(*b*) Hindus, etc.—

Lahore and Jullundur for Sikhs and Dogras; Delhi for Brahmans, Rajputs, Jats, Gujars and Ahirs; Ajmer for Rajputana Hindus (*i.e.*, Rajputs, Jats, etc.); Poona for Mahrattas and Maymyo for Burma classes.

(ii) The Pension Paymaster, Madras, for Madrasis.

(iii) The Assistant Military Secretary (Personal) to His Excellency the Commander-in-Chief (Army Headquarters), for pensioned Indian Officers of all classes required for employment as passenger superintendents on Indian Railways.

All applications from employers should include the particulars shown below and should be addressed to the officers referred to at the places abovementioned :—

(1) Name of person or firm offering employment.
(2) Nature of employment and place at which it is offered.
(3) Proposed pay and period for which employment is offered.
(4) Whether railway fare to place of employment will be paid or not.
(5) Whether return railway fare will be paid in case of a pensioner being discharged for no fault of his own, or after a definite period of service.
(6) Class of men required, *e.g.*, Sikh, Pathan, Dogra, etc.

F. G. MOORE, Lieut.-Colonel,
Assistant Secretary to the Government of India.

Notice.

IT is hereby notified for general information that the next ordinary examination of candidates for Certificates of Competency as Masters and Serangs of Inland Steam Vessels under Act I of 1917, will be held at the Port Office, Chittagong, on the 14th July, the 11th August and the 15th September 1931, at 10-30 a.m.

Applications to be permitted to go up for the examination for any of the above grade certificates must be made at the Port Office, Chittagong, not later than three days prior to the date of examination, the candidates producing their certificates and testimonials and paying the fees.

A. R. RATTRAY, LIEUT.-COMMANDER, R.I.M.,
Nautical Surveyor (offg.).

Chittagong, the 24th June 1931.

Notice.

IT is hereby notified for general information that the next ordinary examination of candidates for Certificates of Competency as Engineers and Engine Drivers of Inland Steam and Motor Vessels under Act I of 1917, will be held at Chittagong, on Mondays, the 6th July, the 3rd August and the 7th September 1931.

Applications to be permitted to go up for the examination for any of the above grade certificates must be made at the Port Office, Chittagong, not later than three days prior to the date of examination, the candidates producing their certificates and testimonials and paying the fees.

A. R. RATTRAY, LIEUT.-COMMANDER, R. I. M.,
Nautical Surveyor (offg.).

Chittagong, the 24th June 1931.

Notice to Creditors.

Estate Walter Meriton Long, deceased.

PURSUANT to section 360 of Act XXXIX of 1925 and section 42 of Act XXVIII of 1866, the creditors and all persons interested in the estate of Walter Meriton Long, late Acting Secretary, Messrs. Braithwaite & Co. (India), Ltd., Calcutta, and late of No. 2-9, Lansdowne Road, Calcutta, who died intestate at Calcutta on the 23rd day of March 1931, and Letters of Administration to whose estate were, on the 20th day of May 1931, granted by the High Court, Calcutta, with effect within the Province of Bengal, to Douglas Horsford Wilmer, of Standard Buildings, Dalhousie Square, South, Calcutta, are hereby required to submit particulars of their claims, with supporting vouchers, to the undersigned on or before the 7th day of August 1931, after which date the Administrator will proceed to distribute the assets of the estate, having regard only to the claims of which notice shall then have been received. All persons indebted to the estate are requested to make payment of their respective debts without delay.

ORR, DIGNAM & Co.,
Solicitors to the Administrator abovenamed.

32, Dalhousie Square, South, Calcutta, 23rd June 1931.

(1319—1 1367)

Currency Notes.

PORTIONS of the following Currency Notes of the Calcutta Circle are stated to have been destroyed and payment of their value has been claimed by the person whose name is shown against the numbers.

Any other person claiming a right to them is warned to communicate at once with the undersigned :—

Regd. No.	Note No.	Value.	Name and address of the claimant.
		Rs.	
WD 4 of 31-32.	RC/67 17198	100	Gauri Shanker Prasad Thatheri Bazar, Benares City.
WD 4 of 31-32.	RC/67 77099	100	
WD 4 of 31-32.	RD/30 83031	100	
WD 4 of 31-32.	PD/42 31712	100	

B. C. DUTT, Currency Officer.

Currency Office, Calcutta, the 17th June 1931.

Currency Note.

PORTION of the following Note of the Calcutta Circle is stated to have been destroyed and payment of its value has been claimed by the person whose name is shown against the number.

Any other person claiming a right to it is warned to communicate at once with the undersigned—

Regd. No.	Note No.	Value.	Name and address of the claimant.
WD 5 of 31-32.	U/87 33295.	Rs. 1,000	Brigadier-General Rao Saheb Sardar Daulat Rao, General Officer Commanding, Mohtey, Dhar State Forces, Dhar, C. I.

B. C. DUTT, Currency Officer.

Currency Office, Calcutta, the 24th June 1931.

Lost.

THE Government Promissory Note No. 276223 of the 3½ per cent. loan of 1900-01 for Rs. 500 originally standing in the name of Satyacharan Haldar, the proprietor, by whom it was never endorsed to any other person, having been lost, notice is hereby given that payment of the above note and the interest thereupon have been stopped at the Public Debt Office, Imperial Bank of India, Calcutta, and that application is about to be made for the issue of duplicate in favour of the proprietor. The public are cautioned against purchasing or otherwise dealing with the abovementioned security.

Name of the advertiser—Satyacharan Haldar.

Residence—4-1A, Basu Babu Lane, Kidderpore, Calcutta.

(1149—3—1274)

Lost.

THE Government Promissory Notes Nos. F006484 and D008630 of the 6 per cent. loan of 1933-36 for Rs. 500 and Rs. 100, respectively, originally standing in the name of the Imperial Bank of India and last endorsed to Satish Chandra Dey, the proprietor, by whom they were never endorsed to any other person, having been lost, notice is hereby given that payment of the above notes and the interest thereupon have been stopped at the Public Debt Office, Imperial Bank of India, Calcutta, and that application is about to be made for the issue of duplicates in favour of the proprietor. The public are cautioned against purchasing or otherwise dealing with the abovementioned securities.

Signature of the advertiser—Satish Chandra Dey.

Residence—P.-o. and village Galimpur, district Dacca.

(1199—3—1322)

In the matter of the Indian Companies Act, 1913, and

In the matter of the Raipura Loan Company, Limited.

AT an extraordinary general meeting of the abovenamed Company duly convened and held at the office of the Company at Raipura on the 28th of December 1930, the following resolution and at a subsequent extraordinary general meeting of the members of the Company also duly convened and held at the same place on the 18th January 1931, the following resolution was duly confirmed as a special resolution, viz. :—

That it has been proved to the entire satisfaction of the meeting that the Company cannot, by reason of the financial difficulties of the people, continue its business and it is advisable to wind up voluntarily and that Mohesh Chandra Pal be and he be appointed liquidator for the purpose af such winding up.

HARIDAS PAL, Director.

Raipura, the 15th June 1931. (1282—1)

In the matter of the Indian Companies Act, VII of 1913,

and

In the matter of the Indo-Danish Bank, Limited (in liquidation).

NOTICE is hereby given that the creditors of the abovenamed bank, which is being voluntarily wound up, are required on or before the 11th July 1931, to send their names, addresses, and particulars of their debts or claims, and the names and addresses of their solicitors, if any, to the undersigned at No. 3J, Raja Naba Krishna Street, Calcutta, and if so required by notice in writing from the undersigned, personally to come and prove their said debts or claims at such time and place as shall be specified in such notice, or in default their debts or claims would not be admitted.

A. B. CHAKRAVARTTY, Liquidator.

Calcutta, the 22nd June 1931. (1315—1 1371)

In the matter of the Indian Companies Act, VII of 1913,

and

In the matter of the Indo-Danish Bank, Limited (in liquidation).

NOTICE is hereby given pursuant to section 209 that a meeting of the creditors of the abovenamed Bank will be held on Saturday, the 11th July 1931, at 12 noon, at No. 5, Dalhousie Square (East), room No. 3, Calcutta.

A. B. CHAKRAVARTTY, Liquidator.

Calcutta, the 22nd June 1931. (1316—1—1372)

In the matter of the Indian Companies Act, VII of 1913,

and

In the matter of Indo-Danish Bank, Limited (in liquidation).

NOTICE is hereby given that at an extraordinary general meeting of the shareholders of the abovenamed Company held on 12th June 1931, it has been resolved that owing to the liabilities of the bank, it cannot carry on its business, so it be voluntarily wound up and that Mr. A. B. Chakravartty of 3J, Raja Nabakrishna Street, is appointed liquidator for such winding up.

A. B. CHAKRAVARTTY, Liquidator.

Calcutta, the 22nd June 1931. (1317—1—1373)

In the matter of the Indian Companies Act, 1913, and

In the matter of the Oil and Industrial, Ltd., Nator, in voluntary liquidation.

NOTICE is hereby given that the following resolution was passed as an extraordinary and final resolution at an adjourned extraordinary general meeting of the Oil and Industrial, Ltd., Nator, held on 14th June 1931 :—

That it has been proved to the entire satisfaction of this meeting that the Company cannot, by reason of its liabilities, continue its business, and it is advisable to wind up voluntarily and that Mr. R. N. Saha, B. sc., F.L.A.A. (London), of Kumarkhali, Nadia, be and is hereby appointed liquidator for the purpose of such winding up and that he be allowed to draw 5 per cent. commission excluding all his office expenses.

SREEKRISHNA BASAK, Managing Director,

Nator, the 21st June 1931. (1334—1 1345)

In the matter of the Indian Companies Acts, 1913-1920, and

In the matter of the Indian Graphite Company, Limited (in liquidation).

NOTICE is hereby given pursuant to section 209 of the Indian Companies Act, 1913, that a meeting of the creditors of the abovenamed Company will be held at Chartered Bank Buildings, Calcutta, on Tuesday, the 21st day of July 1931, at 11 a.m.

G. B. MORTON, Liquidator.

Calcutta, the 23rd June 1931.

(1340—1—1368)

In the matter of the Indian Companies Acts, 1913-1920, and

In the matter of the Indian Graphite Company, Limited (in liquidation).

NOTICE is hereby given that the creditors of the abovenamed Company which is being wound up voluntarily are required on or before the 14th July 1931 to send their names and addresses and the particulars of their debts or claims and the names of their Solicitors (if any) to the undersigned, the liquidators of the said Company, and if so required by notice in writing from the liquidators or by their Solicitors personally to come in and prove the said debts or claims at such time and place as shall be specified in such notice or in default thereof such debts or claims will not be admitted.

G. B. MORTON,
E. T. CORDWELL,
Liquidators.

Chartered Bank Buildings, Calcutta, 24th June 1931.

(1341- 1 —1369)

In the matter of the Indian Companies Acts, 1913-1920, and

In the matter of the Indian Graphite Company, Limited (in liquidation).

NOTICE is hereby given that an extraordinary general meeting of the members of the abovenamed Company duly convened and held at Chartered Bank Buildings, Calcutta, on the 22nd day of June 1931, the resolutions below mentioned were passed as extraordinary resolutions :—

Resolution No. 1.

"That the extraordinary resolution passed at the abovementioned extraordinary general meeting be and is hereby confirmed as a special resolution, namely :—

That the Company be wound up voluntarily."

Resolution No. II.

"That for the purposes of such winding up Messrs. G. B. Morton and E. T. Cordwell be and are hereby appointed liquidators with joint and several powers without remuneration."

G. B. MORTON, Liquidator.

Chartered Bank Buildings, Calcutta, 24th June 1931.

(1342—1—1370)

NOTICE TO CREDITORS OF APPLICATION FOR DISCHARGE.

Section 41(*1*) of the Provincial Insolvency Act, V of 1920.

In the Court of the District Judge at Chittagong.

INSOLVENCY CASE No. 24 OF 1930.

Karam Ali, son of late Abdul Ali *alias* Azaluddin of Agrabad, police-station Double Moorings, Chittagong, applicant.

TAKE notice that the abovenamed insolvent has applied at the Court for his discharge, and that the Court has fixed the 3rd day of July 1931, at 10 o'clock, for hearing the application.

Dated this 27th day of May 1931.

J. YOUNIE, District Judge.

(1182- 1)

In the Court of the Deputy Commissioner, Darjeeling.

INSOLVENCY CASE No. 10 OF 1931.

Dhanjoundor Mukhia, resident of Soom Tea Estate, Darjeeling, applicant.

WHEREAS the abovenamed applicant has applied to this Court by a petition to be declared an insolvent, and the Court has fixed the 7th July 1931 for hearing of the application, anyone desiring to be represented in the matter may appear in person or by a duly authorised pleader before the undersigned on the date fixed.

[ILLEGIBLE], *for* Deputy Commissioner, Darjeeling.

Darjeeling, the 24th June 1931. (1352—1)

THE stock of the Indian Law Reports, Calcutta series for the years 1901 to 1920, have been sold to Messrs. M. Subramaniam and M. V. Krishnaswamy, High Court Vakils, 8, Wood Road, Mount Road, Madras. They have also been granted the right to reprint *facsimile* any of these volumes that may already have gone or may go out of print.

The Governments of Bombay, Madras and the United Provinces have also transferred to the same firm the stock of their series of the Law Reports with similar rights for reprinting.

Intending customers for the Law Reports for these years should henceforth address the abovementioned firm direct.

Inquiries for the Calcutta series for 1876 to 1900 and 1921 onwards should, however, be sent to the undersigned. The Calcutta series for 1876-78, 1880-81, 1883-86, 1888-90, 1892-97, 1899-1900 and 1921 onwards are at present available at the Book Depôt and will be supplied on receipt of the price and other incidental charges mentioned below :—

From 1876 to 1921 Rs. 10 without postage, Rs. 12-12 with Inland postage per year.

From 1922 onwards Rs. 12 without postage, Rs. 15 with Inland postage per year.

A packing charge of annas 2 per volume (minimum charge annas 4) is made when the reports are charged at the without-postage-rate and have to be sent by unpaid railway parcel.

Inquiries for the Indian Law Reports (other than the Calcutta series) for 1876 to 1900 and 1921 onwards should be addressed to the publisher of the series concerned.

B. C. MUKHARJI, Officer in charge,

Book Depôt, Bengal Secretariat.

CALCUTTA, the 14th August 1924.

Imperial Library.

(Secretariat Buildings, 6, Esplanade East, Calcutta.)
Open on—

Weekdays and Saturdays from 10 A.M. to 7 P.M.
Sunday and Gazetted holidays from 2 P.M. to 5 P.M.

THE Imperial Library is also a Lending Library. It is free to all except children. There is no subscription to pay.

K. M. ASADULLAH, Librarian (offg.).

Descriptive Catalogue of Sanskrit Manuscripts.

PARTS I, II and III of a Descriptive Catalogue of the Sanskrit Manuscripts in the Library of the Calcutta Sanskrit College, prepared by Pandit Hrishikesh Sastri and Babu Siva Chandra Giri, M.A., B.L., of that College, are offered to the public for sale. The Catalogue having to be completed in 23 parts the price of each part is 12 annas a copy exclusive of postage. Copies can be obtained from the Principal of the Sanskrit College, Calcutta.

GOVERNMENT OF BENGAL.

FINANCE DEPARTMENT.

Miscellaneous.

Calcutta, the 20th October 1927.

NOTICE.

IN supersession of the orders issued in notice, dated the 10th June 1922, published in the *Calcutta Gazette*, dated the 14th June 1922, the following revised rates have been fixed for the *Calcutta Gazette* and its parts, with effect from the date of this notice. This will not, however, affect the subscriptions already paid at previous rates until they have expired .—

	With postage. Rs.	Rs.	A.
Per annum—			
Entire	31	37	8
Part I	8	10	0
Part IA	2	3	0
Part IB	5	7	0
Part II	5	7	0
Parts III and IV together, or any one of them	1	1	8
Parts V and VI together, or any one of them	2	3	0
Bengal Library Catalogue ..	2	3	0
Jury Lists	3	4	0
Supplement	7	9	0

	Postage according to weight. Rs.	A.
Per issue—		
Entire Gazette (excluding Bengal Library Catalogue and Jury Lists)	0	12
Part I	0	4
Part IA	0	2
Part IB	0	4
Part II	0	4
Parts III and IV together, or any one of them	0	2
Parts V and VI together, or any one of them	0	2
Bengal Library Catalogue	0	8
Jury Lists	1	0
Supplement	0	4

2. This will not affect the orders relating to specially heavy issues, issued in Notice No. 1874 Mis., dated the 22nd August 1923, published in the *Calcutta Gazette*, dated the 29th August 1923.

J. A. WOODHEAD,

Secretary to the Government of Bengal.

CINCHONA FACTORY PRODUCTS.

By order of the Government of Bengal Cinchona Factory Products as manufactured and packed at the Cinchona Factory, Mungpoo, Darjeeling district, will be sold and distributed by the **Superintendent, Presidency Jail,** *in original packages* as received from the Mungpoo Factory at the rates noted below **from the 1st May 1928** :—

Quinine Sulphate.

For 60 lbs. and upwards at a time .. Rs. 18 per lb.
For 6 lbs. and over but less than 60 lbs. at a time .. .. .. „ 19 „
For any quantity less than 6 lbs. .. „ 20 „

Quinine Hydrochloride.

For 60 lbs. and upwards at a time .. Rs. 23 per lb.
For 6 lbs. and over but less than 60 lbs. at a time .. .. .. „ 24 „
For any quantity less than 6 lbs. .. „ 25 „

Quinine Di-Hydrochlor.

For 60 lbs. and upwards at a time .. Rs. 25 per lb.
For 6 lbs. and over but less than 60 lbs. at a time .. .. .. „ 26 „
For any quantity less than 6 lbs. .. „ 27 „

Quinidine Sulphate.

For 60 lbs. and upwards at a time .. Rs. 20 per lb.
For 6 lbs. and over but less than 60 lbs. at a time .. .. .. „ 21 „
For any quantity less than 6 lbs. .. „ 22 „

Cinchonidine Sulphate.

For 60 lbs. and upwards at a time .. Rs. 25 per lb.
For 6 lbs. and over but less than 60 lbs. at a time .. .. .. „ 26 „
For any quantity less than 6 lbs. .. „ 27 „

Cinchonine Sulphate.

For 60 lbs. and upwards at a time .. Rs. 12 per lb.
For 6 lbs. and over but less than 60 lbs. at a time .. .. .. „ 13 „
For any quantity less than 6 lbs. .. „ 14 „

Cinchona Febrifuge (Powder).

For 6 lbs. and over at a time .. Rs. 9 per lb.
For any quantity less than 6 lbs. .. „ 10 „

Cinchona Febrifuge (Tablets).

For 6 lbs. and over at a time .. Rs. 10 per lb.
For any quantity less than 6 lbs. .. „ 11 „

Quinoidine (Tablets).

For 6 lbs. and over at a time .. Rs. 5 per lb.
For any quantity less than 6 lbs. .. „ 6 „

Quinoidine (in Mass).

For 6 lbs. and over at a time .. Rs. 4 per lb.
For any quantity less than 6 lbs. .. „ 5 „

Cinchona Bark (in 50 pound original bags).

Per bag .. .. .. Rs 25.

Transit charges extra in every case.

Quinine Sulphate is for sale to Government Institutions and Missionaries only. It is not for sale to Private Firms or the General Public.

Cinchona Febrifuge in Powder and Tablet form (when in stock) is for sale to Government Institutions, Missionaries and the General Public.

Quinine Sulphate will be supplied to Hospitals and Dispensaries of this Presidency only at the wholesale rate of Rs. 18 per lb., irrespective of quantities. For all other purchasers the rates given above will apply.

Provinces other than Bengal, Bihar and Orissa and Assam will get their supplies of Sulph. Quinine from the Director, Botanical Survey of India, Sibpur, Howrah.

Local sale at the jail gate from 2 to 4 p.m.

The system of payment is by—*Cash in advance*—by "*Treasury Chalans*," which should accompany the order or indent.

In cases where this is not possible, payment should be made by "*Remittance Transfer Receipts*" or crossed "*Cheques.*"

Indents unaccompanied by cash in advance will be sent Value Payable Post. Credit sale is not allowed except under special circumstances.

In the case of *Government officers* payment will be recovered by *Book Transfer, i.e., Countersigned Invoices* in the event of *Cash* not accompanying the indent by "*Treasury Chalans*," *Remittance Transfer Receipts* or *Cheque.*

2. Price and postage must accompany the price of the drug (when the drug is required by post).

3. The name of the Railway and Steamer Station or Post Office must be written distinctly when the parcels are required by Rail, Steamer or Post. *Railway parcels are sent by passenger train only.*

4. A scale of postage is given below :—

For ¼ lb. 4 annas, ½ lb. 5 annas, 1 lb. 8 annas, 1½ lbs. 11 annas, 2 lbs. 14 annas, 2½ lbs. Re. 1-1, 3 lbs. Re. 1-1, 3½ lbs. Re. 1-4, 4 lbs. Re. 1-7, 5 lbs. Re. 1-13, 5½ lbs. Re. 1-13, 6 lbs. Rs. 2.

Two different drugs are not packed in the same parcel and postage must be paid separately for each kind.

N.B —Postage stamps are not accepted as revenue.

Government reserve the right to alter the price without notice.

The Calcutta Gazette

THURSDAY, JULY 2, 1931.

Part IV

Bills introduced in the Bengal Legislative Council, Reports of Select Committees presented or to be presented to that Council, and Bills published before introduction in that Council.

GOVERNMENT OF BENGAL.

Legislative Department.

NOTIFICATION.

No. 1890L.—26th June 1931.—The following report of the Select Committee on the Bengal Village Self-Government (Amendment) Bill, 1931, by Rai Keshab Chandra Banerji Bahadur, M.L.C., with the Bill as amended by the Committee, is hereby published for general information:—

REPORT OF THE SELECT COMMITTEE ON THE BENGAL VILLAGE SELF-GOVERNMENT (AMENDMENT) BILL, 1931.

(By Rai Keshab Chandra Banerji Bahadur, M. L. C.)

We, the members of the Select Committee of the Bengal Legislative Council, to which the Bengal Village Self-Government (Amendment) Bill, 1931, by Rai Keshab Chandra Banerji Bahadur, was referred by a motion carried in the Bengal Legislative Council on the 16th February, 1931, have the honour to submit this our report with a copy of the Bill, as amended by us annexed. All matter omitted by the Select Committee has been printed in italics and enclosed in square brackets, and all new matter inserted has been underlined.

1. The Bill was published in English in the *Calcutta Gazette* on the 12th March, 1931.

2. We consider that the Bill has been so altered as to require republication.

3. The principal changes made in the Bill are detailed below :—

Clauses 2 and 5.—We have inserted in the new section 9A the provisions empowering the Union Board to appoint a substitute for a President or Vice-President to whom leave has been granted. This alteration has rendered clause 5 unnecessary and we have accordingly omitted clause 5.

Clauses 3 and 4.—We consider the amendments herein proposed of doubtful expediency. We consider that the provisions in the Act are sufficient safeguard. These clauses have accordingly been omitted.

Clause 6.—We have considered it advisable to add to the proposed new clause (*4a*) specific mention of the power to employ the staff necessary for carrying out the new powers of the Union Board. This has rendered advisable a consequential amendment of clause (*5*) of section 26 of the Act to insert similar words therein.

Clause 7.—We have omitted the first portion of this clause because the majority of the Committee were of opinion that the time was not yet ripe to leave unfettered discretion to Union Boards as to the system of medicine to be adopted in treatment given in dispensaries. We have retained as much of the clause as relates to empowering Union Boards to make grants to dispensaries.

Clause 8.—We have inserted herein the words " in the same district " which had been omitted in the Bill by the mover through oversight.

Clause 9 has been omitted by the Committee which considers that the provisions of the Act in this respect are better left unchanged.

Clause 10 has been revised in form in order to include a power to make rules as to the constitution of joint committees.

Clause 11.—The Committee considered that the powers given in the Bill were too wide and too vague to be given to Union Boards. They have accordingly limited the subjects on which by-laws may be made, and have guarded against conflict between such by-laws and those made by District Boards.

B. P. SINGH ROY.
C. W. GURNER.
*KESHAB CHANDRA BANERJI.
A. F. M. ABDUR RAHMAN.
SARAT CHANDRA BAL.
HASSAN ALI.
ABDUS SAMAD.
MUAZZEM ALI KHAN.
P. N. GUHA.
SATIS CHANDRA MUKHERJI.
SYED NAUSHER ALI.

* Signed subject to his minute of dissent annexed.

N. B.—The signature of Khan Bahadur Maulvi Azizul Huq had not been received up to the time of printing the Report.

Minute of dissent by Rai Keshab Chandra Banerji Bahadur, M. L. C.

I sign the report subject to the following minute of dissent :—

1. I am of opinion that the amendment of section 12 as originally proposed in the Bill should stand. The reason is this. Candidates are sometimes returned unopposed when the nomination papers of the other candidates are rejected owing to technical defects. Such a member, though convicted of a non-bailable offence only a short time ago, is irremovable under the existing law. The electors, with the exception of a very few, had no opportunity of expressing their confidence or otherwise in him, yet he is, under the law, their accredited representative. The electors often do not know in detail the antecedents of the candidates, more specially of those who after spending the best part of their lives abroad return to their native villages and devote their time to the service of the village people. If such a man had a previous conviction, this is likely to be found out when it is too late. There ought to be proper provision in the Act to deal with such cases, although occasions for the exercise of this extraordinary power may not arise frequently.

2. I do not agree that the time is not yet ripe to allow the Union Boards to adopt a system of medicine in their dispensaries other than allopathic. I am certainly not in favour of an " unfettered " discretion being given to them. The discretion is, indeed, fettered in so far as the sanction of the District Board is concerned. I really do not see any point in the invidious distinction sought to be maintained for Union Board dispensaries in regard to a particular system of treatment. If the allopathic system is to be followed, the sanction of the District Board is sufficient but if any other system is to be followed, Local Government's sanction must be obtained. Why this anomally ? If the District Board is competent to decide whether it should establish an allopathic or homeopathic or any other type of dispensary, why should it be considered incompetent to decide the very same question with regard to a dispensary to be maintained by a Union Board ? The Local Government, so far as I am aware, has not refused sanction to the opening of a single homeopathic dispensary by a Union Board. What is then the point in making this distinction. viz., that Government sanction must be obtained in such cases ?

3. The next and the most important point where I differ from the majority report is about the amendment of sections 58 and 59. There is, indeed, the concurrent jurisdiction of the District Magistrate. The Board's jurisdiction may very seldom, if ever, be exercised with any appreciable advantage. Meetings are not, as a rule, held more than once in a month. In the circumstances, how can the Board be expected to take immediate steps to prevent a breach of the peace which is considered imminent. This power is to be exercised only in cases of emergency. I do not think that the emergency powers have been given to the District Board to be exercised long after the emergency has arisen.

I maintain, therefore, that either the Chairman must be empowered to take immediate action subject to the Board's approval or the District Board's jurisdiction in this matter should be altogether done away with leaving the District Magistrate the sole authority in such cases.

The jurisdiction of the Chairman will be temporary. He can do no harm even if he has a mind to do it. He will only issue a temporary injunction and place the facts of the case before the Board for approval or otherwise at the earliest opportunity. This authority to issue a temporary injunction is nothing compared to the final authority vested in him under section 27 of the Act. If he can exercise with sufficient discretion his executive powers in one case, I fail to see why he cannot be entrusted with the small power of suspending only temporarily an act or a resolution of a Union Board in cases of emergency alone while there are the District Board and the Commissioner to scrutinise the Chairman's action and to confirm, modify or rescind his orders.

THE BENGAL VILLAGE SELF-GOVERNMENT (AMENDMENT) BILL, 1931;

(as amended by the Select Committee.)

NOTE.—All matter omitted by the Select Committee has been printed in italics and enclosed in square brackets, and all new matter inserted by the Select Committee has been underlined.

A

BILL

further to amend the Bengal Village Self-Government Act, 1919.

WHEREAS it is expedient further to amend the Bengal Village Self-Government Act, 1919, in the manner hereinafter appearing; Ben. Act V of 1919.

It is hereby enacted as follows:—

Short title. [*and commencement.*]

1. This Act may be called the Bengal Village Self-Government (Amendment) Act, 1931.

Insertion of new section 9A in Bengal Act V of 1919.

2. After section 9 of the Bengal Village Self-Government Act, 1919 (hereinafter referred to as the said Act), the following section shall be inserted, namely:—

Leave of absence to President or Vice-President of Union Board.

"9A. A union board may grant leave of absence to its president or vice-president for any period not exceeding three months in any one year and may elect one of its members to act as president or vice-president during such absence."

[*Power to remove members.*]

[**3.** *For section 12, sub-section (1), clause (a), the following shall be substituted:—*

"(a) Who, either previous to or subsequent to his election or appointment to the office, has been convicted of any non-bailable offence involving moral turpitude, or."]

[*Removal of President.*]

[**4.** *For section 16, sub-section (1), clause (i), the following shall be substituted:—*

"(i) If either previous to or subsequent to his election or appointment to the office, he has been convicted of any non-bailable offence involving moral turpitude; or."]

[*Filling of casual vacancy in office of President or Vice-President.*]

[**5.** *For section 17 the following shall be substituted:—*

"17. (1) If a President of a Union Board dies, resigns, is removed or avails himself of leave granted under section 9A, the Union Board shall, at a meeting, within a period prescribed by rules under section 101, elect from among its members a new President or a substitute, as the case may be.

(2) If any Union Board fails to elect a new President within the prescribed period, the District Board shall appoint a new President.

(3) If a Vice-President of a Union Board dies, resigns, is removed or avails himself of leave granted under section 9A, the Union Board may, at a meeting, elect from among its members a new Vice-President or a substitute, as the case may be."]

Amendment of section 26.

6. In section 26, [*after sub-section (4), the following sub-section*] of the said Act,—[*shall be inserted,*]

[*Duties of Union Boards.*]

(*a*) in clause (*4*) the word "and" at the end shall be omitted, and after that clause the following clause shall be inserted, namely:—

"(*4a*) may undertake and carry out [*all works*] any work [*that are*] necessary for the prevention and scientific treatment of cattle diseases [*as well as*] or for the improvement of the breed and health of cattle, and may employ the staff requisite for such purposes, and", and

(*b*) to clause (*5*) the following shall be added, namely:—

"and may employ the staff requisite for such purposes".

The Bengal Village Self-Government (Amendment) Bill, 1931.

(Clauses 7—11.)

[*Establishment of primary schools and dispensaries.*]

[**7.** *For section 32, the following shall be substituted :—*

"32. *(a) A Union Board may, subject to any rules made under section 101, establish primary schools or dispensaries for the free treatment of men as well as of cattle under any system of medicine recognised by Government or assume charge of existing primary schools or dispensaries and shall repair, maintain and manage such primary schools or dispensaries under its charge ; or*

(b) Make grants in aid of any such schools or dispensaries whether the same be under public or private management."]

Amendment of section 32.

7. Section 32 of the said Act shall be renumbered as sub-section (*1*) of section 32 and to that section as renumbered the following sub-section shall be added, namely :—

"(*2*) The Union Board may, subject to any rules made under section 101, make grants to any dispensary under public or private management."

New section 32A.

8. After section 32 of the said Act the following section shall be inserted, namely :—

Joint Committees.

"32A. A union board may, with the previous sanction of the district board and subject to any rules made under section 101, join with any other union board or boards in the same district in constituting out of their respective bodies a joint committee for any purpose in which they are jointly interested and in delegating to any such joint committee any power which might be exercised by either or any of the boards concerned."

[*Power to suspend action of Union Board.*]

[**9.** *In sections 58 and 59 for the words "the District Board" wherever occurring, the words "the Chairman of the District Board" shall be substituted and after the words "a breach of the peace" the following shall be added, "Provided that such order of the Chairman shall be subject to the approval of the District Board."*]

Amendment of section 101.

[*Power of Local Government to make rules.*]

10. [*In section 101, sub-section (2), after clause (j),*] After clause (*j*) of sub-section (*2*) of section 101 of the said Act, the following clause shall be inserted, namely :—

"(*jj*) regulating the manner of constituting a joint committee under section 32A, the proceedings of such joint committee, [*proceedings of a joint committee*] the conduct of its correspondence and the method of keeping [*the*] its accounts." [*of the funds relating to the purpose for which the Joint Committee is constituted under section 32A.*"]

New section 101A.

11. After section 101 of the said Act, the following section shall be inserted, namely :—

Power of union board to make bye-laws.

"101A. (*1*) [*Every*] A union board, empowered in this behalf by the commissioner on the recommendation of the district board may, [*subject to the control of the District Board,*] make bye-laws not inconsistent with those of the district board for carrying out [*all or any of*] the purposes [*of the Act and such by-laws may contain provisions imposing penalties for any breach thereof*] specified in sub-clauses (*b*), (*c*) and (*d*) of clause (*1*) of section 26 and for the prevention of encroachments on village roads ; and any such by-law may provide that a breach of it shall be punishable with a fine not exceeding fifty rupees.

(*2*) By-laws made under this section shall have the force of law when confirmed by the commissioner and published in such manner and for such time as the commissioner may direct."

J BARTLEY,
Secy. to the Bengal Legis. Council.

GOVERNMENT OF BENGAL.

Legislative Department.

NOTIFICATION.

No. 1891L.—26th June 1931. The following report of the Select Committee on the Bengal Municipal (Amendment) Bill, 1931, by Rai Keshab Chandra Banerji Bahadur, M.L.C., with the Bill as amended by the Committee, is hereby published for general information:—

REPORT OF THE SELECT COMMITTEE ON THE BENGAL MUNICIPAL (AMENDMENT) BILL, 1931.

(By Rai Keshab Chandra Banerji Bahadur, M.L.C.)

We, the members of the Select Committee of the Bengal Legislative Council, to which the Bengal Municipal (Amendment) Bill, 1931, by Rai Keshab Chandra Banerji Bahadur, was referred by a motion carried in the Bengal Legislative Council on the 16th February, 1931, have the honour to submit this our report with a copy of the Bill, as amended by us annexed. All matter omitted by the Select Committee has been printed in italics and enclosed in square brackets, and all new matter inserted has been underlined.

1. The Bill was published in English in the *Calcutta Gazette* on the 12th March, 1931.

2. We consider that the Bill has been so altered as to require republication.

3. The principal changes made in the Bill with the reasons therefor are set out hereafter.

Clause 1A.—These definitions are rendered necessary by the introduction for the first time into the Act of the two terms here defined. The definitions are those contained in the Calcutta Municipal Act, 1923.

Clause 2.—The substance of the clause has been retained but it has been expressed in the form of a proviso to be added to section 220 of the Act in order to avoid the necessity of amending the reference in section 220 to "the next succeeding section."

Clause 3.—The provisions which clause 5 of the Bill sought to apply to work of the nature referred to in new section 224-1A have been applied by means of a new section 224-2A.

Clause 4.—A consequential amendment to clause (*b*) of sub-section (*1*) of section 241 has been introduced. The proposed new proviso has been omitted by the Committee, the members being of opinion that it is advisable to retain the safeguard contained in sub-section (*4*) of section 241 of the Act. We have also here given to the Commissioners the power which the framer of the Bill sought to give them by sub-clause (*iii*) of the amendment contained in clause 7 of the Bill.

Clause 5.—This clause has been deleted. The Committee was opposed to the idea of empowering the Commissioners to shoulder the expenses of work of the nature referred to in section 332 of the Act. The other provisions of the clause are already provided for by the addition to clause 3 above referred to.

Clause 7.—The Committee agreed to omit the words "construction and maintenance" from sub-clause (*i*) of proposed clause (*c*) since the Act already makes adequate provision elsewhere for the regulation of these matters. The effect of the clause as amended by this omission is obtained more suitably by the redraft.

The Committee considered that the power to levy fees for privy connections should be more specifically provided for. We have accordingly deleted sub-clause (*iii*) and provided specifically in clause 4 that the Commissioners shall have this power.

B. P. SINGH ROY.
C. W. GURNER.
*KESHAB CHANDRA BANERJI.
ALIMUZZAMAN CHAUDHURY.
SATYENDRA KUMAR DAS.
P. N. GUHA.
HAJI BADI AHMED CHAUDHURY.
KAMINI KUMAR DAS.
REBATI MOHAN SARKAR.
LALIT KUMAR BAL.

* Signed subject to his minute of dissent annexed.

Minute of dissent by Rai Keshab Chandra Banerji Bahadur, M. L. C.

In respect of applications for sanction to the construction of a privy, urinal or drain only, legal ingenuity may be exercised on the question whether a privy, drain or urinal, by itself, comes within the meaning of a house as defined in sub-clause (*4*) of section 6 of the Act, and the rules under section 241 may be urged as inapplicable. A more plausible objection may be raised in cases coming within the perview of section 224 of the Act, where substantial structural alterations in existing privies may have to be enforced for sanitary reasons. In these two series of cases it will be convenient for municipalities to turn to section 350 (*c*) and by-laws framed thereunder, as suggested in the Model Rules in Sanitary Board's circular letter Nos. 53-55, dated 27th January, 1904. Risks of legal quibbling will be avoided in these cases if after the word " management " in section 350 (*c*) the word " construction " or the words " including construction " be added. It is because these difficulties actually cropped up during the 10 years it fell to my lot to administer the sanitary sections of the Bengal Municipal Act in a mufassal municipality that I consider the change necessary.

THE BENGAL MUNICIPAL (AMENDMENT) BILL, 1931 ;

(as amended by the Select Committee.)

NOTE.—All matter omitted by the Select Committee has been printed in italics and enclosed in square brackets, and all new matter inserted by the Select Committee has been underlined.

A

BILL

further to amend the Bengal Municipal Act, 1884.

WHEREAS it is expedient further to amend the Bengal Municipal Act, 1884, in the manner hereinafter appearing ;

It is hereby enacted as follows :—

Short title.

1. This Act may be called the Bengal Municipal (Amendment) Act, 1931.

Amendment of section 6 of Bengal Act III of 1884.

1A. In section 6 of the Bengal Municipal Act, 1884 (hereinafter referred to as the said Act)—

(*i*) after clause (*2*) the following clause shall be inserted, namely :—

"(*2a*) 'connected-privy' means a privy which is directly connected with a sewer,"

(*ii*) after clause (*14A*) the following clause shall be inserted, namely :—

"(*14B*) 'service-privy' means a fixed privy which is cleansed by hand, but does not include a moveable commode."

Amendment of section 220.

[*Insertion of new section 220A in Bengal Act III of 1884.*]

[*Operation of Parts VI and IX in certain Municipalities.*]

2. [*After section 220 of the Bengal Municipal Act, 1884 (hereinafter referred to as the said Act), the following section shall be inserted,*] To section 220 of the said Act the following proviso shall be added, namely :—

[" *220A. Notwithstanding anything contained in section 220,*] Provided further that except as is otherwise provided in section 241, Parts VI and IX shall, from the date of commencement of the Bengal Municipal (Amendment) Act, 1931, be deemed to be [*extended to*] in force in any municipality in which a sewerage system is in working order without being expressly extended thereto."

Insertion of new sections 224-1A and 224-2A.

Commissioners may require provision of connected-privies.

3. After section 224 of the said Act the following sections shall be inserted, namely :—

"224-1A. The Commissioners may require the owners of any land within ninety days to convert any existing service-privy on such land into a connected-privy or to provide a connected-privy thereon if such conversion or provision is, in the opinion of the Commissioners, necessary for sanitary reasons.

Works may be executed by Commissioners and expenses may be recovered by instalments or remitted in case of poverty.

224-2A. (*1*) If the owners or occupiers of any land fail to comply with the requisition referred to in section 224 or 224-1A, the Commissioners themselves may execute all or any of such works.

(*2*) The Commissioners at a meeting may order that any expenses payable in respect of any work done by them under sub-section (*1*) shall be recovered by instalments from the persons liable to pay the same ; or, if it should appear to them that the said person is unable by reason of poverty to pay the same, may order the same or any portion thereof, to be paid out of the municipal fund."

The Bengal Municipal (Amendment) Bill, 1931.

(Clauses 4—7).

Amendment of section 241.

4. (*1*) In sub-section (*1*) of section 241 of the said Act :—

(*i*) in clause (*a*) [*of sub-section* (*1*)] for the words " and chimneys " the words "chimneys, drains, privies, urinals and cess-pools " shall be substituted, and

(*ia*) in clause (*b*), after the word " privies " the word "urinals " shall be inserted.

[(*ii*) *to sub-section* (*4*) *the following proviso shall be added, namely* :—

"*Provided that this section shall, from the date of commencement of the Bengal Municipal (Amendment) Act, 1931, be deemed to be extended to any Municipality in which a sewerage system is in working order without being expressly extended thereto.*"]

(*2*) after sub-section (*1*) of the same section the following sub-section shall be inserted, namely :—

(*1A*) The Commissioners at a meeting may also from time to time make, repeal or alter rules imposing fees to be charged for the proper connection of drains, privies and urinals with an underground sewerage system.

[*Amendment of section 247.*]

[**5.** *In section 247 of the said Act for the words " the last preceding section " the words, figures and letters "sections 224, 224-IA, 246 or 332 " shall be substituted.*]

Amendment of section 271.

6. In section 271 of the said Act, after the figures "224" the figures and letter "224-IA" shall be inserted.

Amendment of section 350.

7. In section 350 of the said Act [*for*] in clause (*c*) [*the following shall be substituted, namely*] for the words "privies, drains " the words "drains, privies and urinals " shall be substituted and after that clause the following clause shall be inserted, namely :—

[(*c*) *regulating*—

(*i*) *the disposal of sewage, offensive matter, carcasses of animals and rubbish, and the management, construction and maintenance of privies, drains, urinals, cess-pools, and sewers ;*]

[(*ii*)] (*cc*) regulating the material, size, laying, position, tapping, ventilation, flushing, flooring of [*all*] drains, privies and urinals [*connected or otherwise,*] and the provision of all appurtenances thereto ;

[(*iii*) *the fees to be charged for the proper connection of privies, drains and urinals with an underground sewerage system where an underground sewerage system is available for such connection.*"]

J. BARTLEY,

Secy. to the Bengal Legis. Council.

Registered No. C207

No. 27 of 1931

The Calcutta Gazette

THURSDAY, JULY 2, 1931.

CONTENTS:

	PAGE.
Gifts made by private individuals of the Chittagong Division during the year 1930-31	869
Corporation of Calcutta Notice ..	870
Calcutta Improvement Trust Notices and statement of accounts of Sinking Funds for the year ending 31st March 1930 ..	870—871
Vital Statistics for the towns of Bengal for the week ending 20th June 1931 ..	872
Statement showing the daily gauge-readings of certain rivers for the period ending 11th June 1931	873—883
Statement under the Cotton Ginning and Pressing Factories Act, 1925 ..	884
Weather and Crop Report for the week ending 24th June 1931	885—888
Prices-current (wholesale) of certain articles in the Calcutta Mart and (retail) of common rice and salt in the districts of Bengal for the first-half of June 1931 ..	889—892
Statement showing the daily gauge-readings of certain rivers for the week ending 18th June 1931 ..	893—899
Statements of weekly gauge readings of certain rivers in Bengal	900—901
Resolution on the Budget Estimates of income and expenditure of the Howrah Bridge for the year 1931-32 ..	902

Supplement.

Official Papers.

Statement showing gifts over Rs. 1,000 and up to Rs. 5,000 in value made by private individuals for construction of works of public utility in the districts of the Chittagong Division during the year 1930-31.

Division.	Districts.	Name of donor.	Purpose.	Amount.	Total of districts.	Total of division.
1	2	3	4	5	6	7
				Rs.	Rs.	Rs.
Chittagong	Tippera ..	Muhammad Hossain Ali of village Matiara, post office Gahara, district Tippera.	A pucca bridge on , on a village road.	About 2,000	2,000	3,200
	Noakhali	Babu Khirod Chandra Mahajan of South Joshpur, Mahamaya union board, district Noakhali.	Construction of a road from Mirdhar Hat towards Nalua Katchery.	1,200	1,200	

REMARKS.—Verified by the Circle Officer, Sadar.

Chittagong, the 25th June 1931.

W. H. NELSON, *Commissioner.*

CORPORATION OF CALCUTTA.

Central Municipal Office, 25th June 1931.

NOTICE

It is hereby notified for general information that the Corporation of Calcutta under powers vested in them in this behalf by a resolution, dated the 20th May 1931, prescribed the alignment of Sreenath Babu Lane in Ward No. 8 to a width of 20 feet.

A copy of the plan prepared in this behalf may be seen in the office of the Surveyor and Valuer of the Corporation any day between 11 a.m. and 3 p.m. on payment of usual fees.

J. C. MUKERJEA,
Chief Executive Officer.

CALCUTTA IMPROVEMENT TRUST.

5, Clive Street, Calcutta, the 16th June 1931.

Notice under Section 43 of Bengal Act V of 1911.

Scheme No. XXXVIII—Mission Row to Central Avenue (portion of Alignment Nos. X and XI).

The Board of Trustees for the Improvement of Calcutta hereby give notice that a street scheme, viz., Scheme No. XXXVIII—Mission Row to Central Avenue, which includes portions of Alignment Nos. X and XI as sanctioned by Government, in Wards Nos. X and XII of the Calcutta Municipality, has been framed for the area bounded as follows:—

On the North—From a point on the middle of Dalhousie Square East about 60 feet from the south-western corner of No. 6, Dalhousie Square East, running eastwards in a straight line across Dalhousie Square East, and Mission Row and along the northern boundary of No. 9, Mission Row to the north-eastern corner of No. 8, Mission Row. Thence running in a south-easterly direction across Bentinck Street to the south-western corner of No. 74, Bentinck Street, thence running eastwards along the northern edge of Weston Street to south-eastern corner of 15, Bow Street and thence to the north-eastern corner of No. 2, Kapalitola Lane, and thence in a south-easterly direction across Khetra Das Lane and Kapalitola Lane to the north-eastern corner of 15, Khetra Das Lane.

On the East—From this point running southwards in a straight line along the eastern boundaries of 15, 14/1, 14, and 5, Khetra Das Lane to the south-western corner of No. 12, Khetra Das Lane.

From this point running westwards along the southern boundary of No. 5, Khetra Das Lane, southern and western boundary of No. 2, Khetra Das Lane, a portion of the southern boundary of No. 25, Khairu Lane, the eastern and southern boundary of No. 23, Khairu Lane and across Khairu Lane to a point on the eastern boundary of No. 4B, Khairu Lane about 30 feet from its south eastern corner. Thence southwards along the western edge of Khairu Lane to the south-eastern corner of 9/2, Khairu Lane.

On the South—Thence running westwards along a portion of the northern boundary of Scheme VIIE and the northern boundary of the mosque at No. 23, Prinsep Street to the south-western corner of No. 4, Metcalfe Street: thence westwards to the eastern edge of Bentinck Street about 60 feet from its junction with northern edge of Prinsep Street and thence across Bentinck Street along the southern edge of Mangoe Lane across Nos. 4 and 3, Mangoe Lane and No. 12, Old Court House Street to a point on the middle of Old Court House Street about 57 feet away from the north-western corner of No. 12, Old Court House Street.

On the West—From this point running northwards in a straight line along the middle of Old Court House Street and Dalhousie Square East to its starting point.

Particulars of the scheme, map of the area comprised in the scheme and a statement of the land which it is proposed to acquire may be inspected at the offices of the Trust, No. 5, Clive Street on week days between the hours of 11 a.m. and 4 p.m. and on Saturdays between 11 a.m. and 2 p.m.

Copies of the above documents will be delivered to the applicant on payment of the following fees:—

	Rs.	A.
Particulars of the scheme ...	0	4
Map of the area ...	1	0
Statement of the land which it is proposed to acquire ...	0	4

Objections to the scheme will be received up to the 10th October 1931.

NOTIFICATIONS.

Calcutta, the 26th June 1931.

Notice is hereby given, under section 7 (*4*) of the Calcutta Improvement Act, 1911, that the Bengal Chamber of Commerce have re-elected Mr. George Morgan, C.I.E., of Messrs. Morgan Walker and Company, as their representative on the Board of Trustees for the Improvement of Calcutta.

J. A. L. SWAN, *Chairman.*

The 25th June 1931.

Statement of accounts for the year ending 31st March 1930 of the Sinking Funds established by the Board of Trustees for the Improvement of Calcutta for the repayment of their Debenture Loans, required under section 103 of the Calcutta Improvement Act, V of 1911.

Particulars of the Debenture Loans.	Amount invested during the year 1929-30 under section 101 of the Calcutta Improvement Act, 1911.	Date of last investment.	Aggregate amount of the Securities held by the Trustees.	Aggregate amount applied under section 102 of the Calcutta Improvement Act, 1911, in or towards repaying loans.	Aggregate amount already paid into the Sinking Fund.
1	2	3	4	5	6
	Rs. A. P.				Rs. A. P.
6 per cent. £350,000 loan of 1922-52.	(a) (c) 2,21,075 5 10	1931. 29th January	£52,130 7 2 Rs. 1,44,400 0 0	Nil	(d) 7,67,016 15 10
5½ per cent. £700,000 loan of 1923-53.	(b) (c) 2,77,382 3 0	29th January	£85,084 0 1 Rs. 2,62,300 0 0	Nil	(d) 14,30,397 15 11
6 per cent. Rs. 50,00,000 loan of 1925-55.	(c) 61,020 1 9 was invested and securities of the face value of Rs. 47,800 were transferred by the Board.	1930. 19th December	Rs. 4,34,600 0 0	Nil	Cash— (d) 85,445 0 9 Securities— 3,45,300 0 0 (face value).
5½ per cent. Rs. 25,00,000 loan of 1929-30.	21,000 0 0	10th October	Rs. 21,000 0 0	Nil	21,920 0 0

(a) This includes Rs. 92,660-11-11 overdrawn from the Bank.
(b) This includes Rs. 21,094-14-4 overdrawn from the Bank.
(c) The figures in column 2 include the Bank's commission and miscellaneous charges for investment and exclude the amount of G. P. Notes transferred to other loans during the year.
(d) The figures in column 6 were arrived at by excluding the interests paid to the Bank on overdrafts and commission on interest.

J. G. BHANDARI,
Accountant-General, Bengal.

E. N. BLANDY,
Secy. to the Govt. of Bengal, Finance Department.

Vital statistics of towns with a population of 50,000 and over of the Bengal Presidency for the week ending Saturday, the 20th June 1931.

District.	No.	Towns.	Population under registration according to Census of 1921.			Births registered.		Deaths registered.																							
			Male.	Female.	Total.	Number registered (excluding still-births).	Still-births registered.	Cholera.	Small-pox.	Plague.	Malaria.	Enteric fever.	Measles.	Relapsing fever.	Kala-azar.	Other fevers	Dysentery.	Diarrhœa.	Influenza.	Pneumonia.	Phthisis.	Other respiratory diseases	Injuries including suicide.	Deaths from child-birth.	Other causes.	Total of all causes.			Total of corresponding week of the previous year.		
																									Male.	Female.	Total.	Male.	Female.	Total.
Calcutta ..	1	Calcutta ..	724,248	353,016	1,077,264	363	27	26	11	..	9	15	4	..	7	43	25	13	24	62	47	112	18	..	208	346	278	624	258	208	466
Burdwan ..	2	Asansol Mining Settlement.	176,814	152,539	329,353	234	2	2	1	..	3	..	..	..	..	64	10	4	..	15	1	6	5	4	93	122	86	208	63	40	103
Howrah ..	3	Howrah ..	128,472	66,829	195,301	72	6	5	6	..	3	2	..	..	1	6	4	11	..	18	8	32	1	..	29	71	55	126	53	45	98
Dacca ..	4	Dacca ..	67,333	52,117	119,450	47	4	4	..	..	..	..	1	..	1	3	3	5	..	9	6	4	1	..	14	30	21	51	35	22	57
24-Parganas	5	Bhatpara ..	45,723	19,886	65,609	13	..	..	..	..	3	1	..	..	..	9	3	..	..	1	..	1	1	..	1	11	9	20	4	2	6
	6	Titagarh ..	36,533	15,918	52,451	12	..	..	..	..	..	..	..	..	..	8	1	..	..	..	..	..	..	..	1	7	3	10	8	3	11

R. B. KHAMBATA, M.R.C.S. (ENG.), L.R.C.P. (LOND.), D.P.H. (CAMB.), *Director of Public Health, Bengal (offg.).*

CALCUTTA, *the 25th June 1931.*

Statement showing the daily gauge readings of certain rivers at the stations named below for the 1st June 1931.

Name of river and place where readings are taken.	Hour.	Reading on gauge.	Value of zero referred to P.W.D. datum.	Height above P. W. D. datum	Compared with previous day's height.		Height above P. W. D. datum on same date in—	
					Rise.	Fall.	1930.	1929
Ganges .. Monghyr ..	6 a.m. ..	99·25′	0·00′	99·25′	..	..	99·20′	99·60′
Ganges .. Rajmahal ..	6 „ ..	59·85′	0·00′	59·85′	..	0·10′	58·45′	57·85′
Ganges .. Goalundo ..	8-30 a.m. ..	15·00′	1·409′	16·409′	0·10′	..	13·109′	18·109′
Bhagirathi .. Swarupganj ..	9 a.m. ..	5·59′	0·00′	5·59′	..	..	4·99′	4·40′
Brahmaputra .. Dibrugarh ..	8 a.m. ..	19·50′	*308·50′	328·00′	0·2′	..	332·00′	331·06′
Brahmaputra .. Gauhati ..	8 „ ..	9·70′	136·958′	146·658′	1·10′	..	143·058′	148·358
Brahmaputra .. Serajganj ..	....	..	1·509′	..	..	..	27·809′	33·709′
Dhaleswari .. Sabhar ..	7 a.m. ..	12·00′	0·00′	12·00′	..	..	..	14·33′
Meghna .. Fenchuganj ..	7 a.m. ..	23·58′	1·509′	25·089′	..	0·40′	..	..
Meghna .. Bhairab Bazar ..	6-24 a.m. ..	12·67′	1·61′	14·28′	0·08′	..	11·19′	16·36′
Meghna .. Chandpur ..	....	..	1·61′	..	..	..	7·19′	7·78′
Lakhya .. Narayanganj ..	7 a.m. ..	16·42′	–5·59′	10·83′	1·50′	..	9·74′	11·33′
Madaripur Bil Route .. Takerhat ..	....	..	0·00′	..	..	..	5·95′	..
Damodar .. Edilpur ..	6 a.m. ..	—0·87′	92·58′	91·71′	..	..	91·66′	93·08′

* 0 of gauge is 308·50 above M.S.L. from this date.

Statement showing the daily gauge readings of certain rivers at the stations named below for the 2nd June 1931.

Name of river and place where readings are taken.	Hour.	Reading on gauge.	Value of zero referred to P. W. D. datum.	Height above P. W. D. datum.	Compared with previous day's height.		Height above P. W. D. datum on same date in—	
					Rise	Fall.	1930.	1929.
Ganges .. Monghyr	6 a.m. ..	99·50′	0·00′	99·50′	..	0·25′	99·20′	99·70′
Ganges .. Rajmahal	6 „ ..	59·70′	0·00′	59·70′	..	0·15′	58·50′	57·90′
Ganges .. Goalundo	8-30 a.m. ..	15·00′	1·409′	16·409′	Steady		13·109′	17·609′
Bhagirathi .. Swarupganj	9 a.m. ..	5·36′	0·00′	5·36′	..	0·43′	4·92′	4·46′
Brahmaputra .. Dibrugarh	8 a.m. ..	20·30′	308·50′	328·80′	0·80′	..	332·50′	331·16′
Brahmaputra .. Gauhati	8 „ ..	9·90′	136·958′	146·858′	0·20′	..	143·658′	147·658′
Brahmaputra .. Serajganj	.... ..	..	1·509′	..	..	..	27·809′	33·309′
Dhaleswari .. Sabhar	7 a.m. ..	11·90′	0·00′	11·90′	..	0·10′	..	14·25′
Meghna .. Fenchuganj	7 a.m. ..	23·08′	1·509′	24·589′	..	0·50′	..	..
Meghna .. Bhairab Bazar	6-24 a.m. ..	12·58′	1·61′	14·19′	..	0·08′	11·32′	16·28′
Meghna .. Chandpur	.... ..	..	1·61′	..	..	..	7·11′	7·78′
Lakhya .. Narayanganj	7 a.m. ..	16·62′	−5·59′	11·03′	0·20′	..	9·99′	11·41′
Madaripur Bil Route .. Takerhat	.... ..	..	0·00′	..	..	..	5·85′	..
Damodar .. Edilpur	6 a.m. ..	−0·83′	92·58′	91·75′	0·04′	..	91·71′	93·06′

Statement showing the daily gauge readings of certain rivers at the stations named below for the 3rd June 1931.

Name of river and place where readings are taken.	Hour.	Reading on gauge.	Value of zero referred to P. W. D. datum.	Height above P. W. D. datum.	Compared with previous day's height.		Height above P. W. D. datum on same date in—	
					Rise.	Fall.	1930.	1929.
Ganges .. Monghyr ..	6 a.m. ..	99·75′	0·00′	99·75′	0·25′	..	99·20′	99·90′
Ganges .. Rajmahal ..	6 „ ..	59·70′	0·00′	59·70′	Steady.		58·55′	58·40′
Ganges .. Goalundo ..	8-30 a.m. ..	15·10′	1·409′	16·509′	0·10′	..	13·209′	17·309′
Bhagirathi .. Swarupganj ..	10 a.m. ..	5·35′	0·00′	5·35′	..	0·01′	4·88′	4·52′
Brahmaputra .. Dibrugarh ..	8 a.m. ..	20·80′	308·50′	329·30′	0·50′	..	332·50′	331·21′
Brahmaputra .. Gauhati ..	8 „ ..	10·30′	136·958′	147·258′	0·40′	..	144·258′	147·558′
Brahmaputra .. Serajganj ..	.... ..	..	1·509′	..	..	..	28·009′	33·109′
Dhaleswari .. Sabhar ..	7 a.m. ..	12·10′	0·00′	12·10′	0·20′	..	..	..
Meghna .. Fenchuganj ..	7 a.m. ..	22·58′	1·509′	24·089′	..	0·50′	..	..
Meghna .. Bhairab Bazar ..	6-24 a.m. ..	12·50′	1·61′	14·11′	..	0·08′	11·28′	16·28′
Meghna .. Chandpur ..	.... ..	..	1·61′	..	..	..	6·94′	7·61′
Lakhya .. Narayanganj ..	7 a.m. ..	16·50′	−5·59′	10·91′	..	0·12′	9·99′	11·49′
Madaripur Bil Route .. Takerhat ..	.... ..	..	0·00′	..	..	..	6·10′	..
Damodar .. Edilpur ..	6 a.m. ..	−0·79′	92·58′	91·79′	0·04′	..	91·71′	93·25′

Statement showing the daily gauge readings of certain rivers at the stations named below for the 4th June 1931.

Name of river and place where readings are taken.	Hour.	Reading on gauge.	Value of zero referred to P. W. D. datum.	Height above P. W. D. datum.	Compared with previous day's height.		Height above P. W. D. datum on same date in—	
					Rise.	Fall.	1930.	1929.
Ganges .. Monghyr ..	..	..	0·00′	..	..	..	99·20′	110·00′
Ganges .. Rajmahal ..	6 a.m. ..	59·70′	0·00′	59·70′	Steady		59·00′	59·20′
Ganges .. Goalundo ..	8-30 „ ..	15·30′	1·409′	16·709′	0·20′	..	13·309′	17·109′
Bhagirathi .. Swarupganj ..	11 a.m. ..	5·16′	0·00′	5·16′	..	0·19′	4·91′	4·74′
Brahmaputra .. Dibrugarh ..	8 a.m. ..	21·00′	308·50′	329·50′	0·20′	..	332·83′	333·11′
Brahmaputra .. Gauhati ..	8 „ ..	10·10′	136·958′	147·058′	..	0·20′	144·858′	147·058′
Brahmaputra .. Serajganj ..	..	..	1·509′	..	..	...	28·309′	32·709′
Dhaleswari .. Sabhar ..	7 a.m. ..	12·20′	0·00′	12·20′	0·10′	..	..	13·67′
Meghna .. Fenchuganj ..	7 a.m. ..	22·00′	1·509′	23·509′	..	0·58′	..	..
Meghna .. Bhairab Bazar ..	6-24 „ ..	12·42′	1·61′	14·03′	..	0·08′	11·28′	16·28′
Meghna .. Chandpur ..	..	..	1·61′	..	..	..	6·78′	7·61′
Lakhya .. Narayanganj ..	7 a.m. ..	16·17′	—5·59′	10·58′	..	0·33′	9·74′	11·62′
Madaripur Bil Route .. Takerhat ..	..	..	0·00′	..	..	..	6·10′	..
Damodar .. Edilpur ..	6 a.m. ..	—0·75′	92·58′	91·83′	0·04′	..	91·75′	93·10′

Statement showing the daily gauge readings of certain rivers at the stations named below for the 5th June 1931.

Name of river and place where readings are taken.	Hour.	Reading on gauge.	Value of zero referred to P. W. D. datum.	Height above P. W. D. datum.	Compared with previous day's height.		Height above P. W. D. datum on same date in—	
					Rise.	Fall.	1930.	1929.
Ganges .. Monghyr ..	6 a.m. ..	100·25′	0·00′	100·25′	..	..	99·30′	109·60′
Ganges .. Rajmahal ..	6 „ ..	59·75′	0·00′	59·75′	0·05′	..	59·40′	59·50′
Ganges .. Goalundo ..	8·30 „ ..	15·40′	1·409′	16·809′	0·10′	..	13·409′	17·109′
Bhagirathi .. Swarupganj ..	12 noon ..	4·86′	0·00′	4·86′	..	0·30′	4·78′	5·28′
Brahmaputra .. Dibrugarh ..	8 a.m. ..	28·40′	301·50′*	329·90′	7·40′	..	333·00′	333·66′
Brahmaputra .. Gauhati ..	8 „ ..	10·10′	136·958′	147·058′	Steady.		145·158′	146·958′
Brahmaputra .. Serajganj ..	.... ..	..	1·509′	..	..	..	28·709′	32·109′
Dhaleswari .. Sabhar ..	7 a.m. ..	12·20′	0·00′	12·20′	Steady.		..	13·50′
Meghna .. Fenchuganj ..	7 a.m. ..	21·40′	1·509′	22·909′	..	0·60′	..	..
Meghna .. Bhairab Bazar ..	6·24 „ ..	12·42′	1·61′	14·03′	Steady.		11·19′	16·19′
Meghna .. Chandpur ..	.... ..	..	1·61′	..	..	..	6·61′	7·53′
Lakhya .. Narayanganj ..	7 a.m. ..	16·42′	5·59′	10·83′	0·25′	..	9·45′	12·62′
Madaripur Bil Route .. Takerhat ..	2·4 p.m. ..	6·40′	0·00′	6·40′	..	0·20′	6·05′	..
Damodar .. Edilpur ..	6 a.m. ..	—0·75′	92·58′	91·83′	Steady.		91·58′	95·41′

*Zero of gauge is 301·50′ from this date.

Statement showing the daily gauge readings of certain rivers at the stations named below for the 6th June 1931.

Name of river and place where readings are taken.	Hour.	Reading on gauge.	Value of zero referred to P. W. D. datum.	Height above P.W.D. datum.	Compared with previous day's height.		Height above P. W. D. datum on same date in—	
					Rise.	Fall.	1930	1929.
Ganges .. Monghyr ..	6 a.m. ..	100·33′	0·00′	100·33′	..	0·08′	99·50′	101·50′
Ganges .. Rajmahal ..	6 „ ..	59·75′	0·00′	59·75′	Steady.		59·40′	59·45′
Ganges .. Goalundo ..	8-30 a.m. ..	15·50′	1·409′	16·909′	0·10′	..	13·409′	17·009′
Bhagirathi .. Swarupganj ..	12 noon ..	4·43′	0·00′	4·43′	..	0·43′	4·74′	6·10′
Brahmaputra .. Dibrugarh ..	8 a.m. ..	28·50′	301·50′	330·00′	0·10′	..	332·50′	333·36′
Brahmaputra .. Gauhati ..	8 „	9·90′	136·958′	146·858′	..	0·20′	145·958′	147·258′
Brahmaputra .. Sirajganj ..	....	..	1·509′	..	..	..	29·109′	32·109′
Dhaleswari .. Sabhar ..	7 a.m. ..	12·30′	0·00′	12·39′	0·10′	..	10·70′	13·58′
Meghna .. Fenchuganj ..	7 a.m. ..	20·85′	1·509′	22·359′	..	0·55′	..	..
Meghna .. Bhairab Bazar ..	6-24 a.m. ..	12·33′	1·61′	13·94′	..	0·09′	11·11′	16·28′
Meghna .. Chandpur ..	....	..	1·61′	..	..	..	6·44′	8·11′
Lakhya .. Narayanganj ..	7 a.m. ..	15·83′	−5·59′	10·24′	..	0·59′	9·16′	..
Madaripur Bil Route .. Takerhat ..	2-24 p.m. ..	6·30′	0·00′	6·30′	..	0·10′	5·70′	..
Damodar .. Edilpur ..	6 a.m. ..	—0·71′	92·58′	91·87′	0·04′	..	91·66′	95·33′

Statement showing the daily gauge readings of certain rivers at the stations named below for the 7th June 1931.

Name of river and place where readings are taken.	Hour.	Reading on gauge.	Value of zero referred to P. W. D. datum.	Height above P. W. D. datum.	Compared with previous day's height.		Height above P. W. D. datum on same date in—	
					Rise.	Fall.	1930.	1929.
Ganges .. Monghyr	6 a.m. ..	100·33′	0·00′	100·33′	Steady.		99·60′	101·80′
Ganges .. Rajmahal	6 „ ..	59·75′	0·00′	59·75′	Steady.		59·50′	59·60′
Ganges .. Goalundo	8-30 a.m. ..	15·60′	1·409′	17·009′	0·10′	..	13·509′	17·909′
Bhagirathi .. Swarupganj	12 noon ..	4·36′	0·00′	4·36′	..	0·07′	4·87′	6·95′
Brahmaputra .. Dibrugarh	8 a.m. ..	28·60′	301·50′	330·10′	0·10′	..	332·10′	334·06′
Brahmaputra .. Gauhati	8 „ ..	9·80′	136·958′	146·758′	..	0·10′	146·658′	149·158′
Brahmaputra .. Serajganj	12-24 p. m. ..	33·70′	1·509′	35·209′	Steady.		29·409′	32·259′
Dhaleswari .. Sabhar	7 a.m. ..	12·20′	0·00′	12·20′	..	0·10′	10·80′	..
Meghna .. Fenchuganj	7 a.m. ..	20·25′	1·509′	21·759′	..	0·60′	..	..
Meghna .. Bhairab Bazar	6-24 a.m. ..	12·00′	1·61′	13·61′	..	0·33′	11·03′	..
Meghna .. Chandpur	....	..	1·61′	..	..	..	6·36′	..
Lakhya .. Narayanganj	7 a.m. ..	15·75′	−5·59′	10·16′	..	0·08′	9·03′	12·87′
Madaripur Bil Route .. Takerhat	5-44 a.m. ..	6·30′	0·00′	6·30′	Steady.		5·80′	..
Damodar .. Edilpur	6 a.m. ..	−0·71′	92·58′	91·87′	Steady.		93·00′	..

Statement showing the daily gauge readings of certain rivers at the stations named below for the 8th June 1931.

Name of river and place where readings are taken.	Hour.	Reading on gauge.	Value of zero referred to P. W. D. datum.	Height above P. W. D. datum.	Compared with previous day's height.		Height above P. W. D. datum on same date in—	
					Rise.	Fall.	1930.	1929.
Ganges .. Monghyr	6 a.m. ..	100·33′	0·00′	100·33′	Steady.		99·60′	102·20′
Ganges .. Rajmahal	6 „ ..	59·85′	0·00′	59·85′	0·10′	..	59·30′	60·40′
Ganges .. Goalundo	8-30 a.m. ..	15·50′	1·409′	16·909′	..	0·10′	13·909′	17·009′
Bhagirathi .. Swarupganj	1 p.m. ..	4·20′	0·00′	4·20′	..	0·16′	4·67′	6·98′
Brahmaputra .. Dibrugarh	8 a.m. ..	28·40′	301·50′	329·90′	..	0·20′	331·70′	334·46′
Brahmaputra .. Gauhati	8 „ ..	10·40′	136·958′	147·358′	0·60′	..	147·458′	150·558′
Brahmaputra .. Serajganj	12-24 p.m. ..	33·70′	1·509′	35·209′	Steady.		29·609′	32·309′
Dhaleswari .. Sabhar	7 a.m. ..	12·10′	0·00′	12·10′	..	0·10′	10·90′	..
Meghna .. Fenchuganj	7 a.m. ..	19·70′	1·509′	21·209′	..	0·55′	..	..
Meghna .. Bhairab Bazar	6-24 a.m. ..	11·33′	1·61′	12·94′	..	0·67′	10·94′	..
Meghna .. Chandpur	....	..	1·61′	..	..	..	6·36′	..
Lakhya .. Narayanganj	7 a.m. ..	15·47′	−5·59′	9·88′	..	0·28′	9·37′	13·12′
Madaripur Bil Route .. Takerhat	6-24 a.m. ..	6·00′	0·00′	6·00′	..	0·30′	5·90′	..
Damodar .. Edilpur	6 a.m. ..	−0·71′	92·58′	91·87′	Steady.		93·08′	..

Statement showing the daily gauge readings of certain rivers at the stations named below for the 9th June 1931.

Name of river and place where readings are taken.	Hour.	Reading on gauge.	Value of zero referred to P. W. D. datum.	Height above P. W. D. datum.	Compared with previous day's height.		Height above P. W. D. datum on same date in—	
					Rise.	Fall.	1930.	1929.
Ganges .. Monghyr ..	6 a.m. ..	100·25′	0·00′	100·25′	..	0·08′	99·70′	102·40′
Ganges .. Rajmahal ..	6 „ ..	60·20′	0·00′	60·20′	..	0·35′	59·30′	61·00′
Ganges .. Goalundo ..	8-30 a.m. ..	15·50′	1·409′	16·909′	Steady		13·909′	17·409′
Bhagirathi .. Swarupganj ..	3 p.m. ..	4·15′	0·00′	4·15′	..	0·05′	4·83′	7·03′
Brahmaputra .. Dibrugarh ..	8 a.m. ..	28·00′	301·50′	329·50′	..	0·40′	331·50′	334·76′
Brahmaputra .. Gauhati ..	8 a.m. ..	11·20′	136·958′	148·158′	0·80′	..	148·058′	151·158′
Brahmaputra .. Serajganj ..	12-24 p.m. ..	33·80′	1·509′	35·309′	0·10′	..	29·809′	32·709′
Dhaleswari .. Sabhar ..	7 a.m. ..	12·00′	0·00′	12·00′	..	0·10′	11·20′	..
Meghna .. Fenchuganj ..	7 a.m. ..	19·10′	1·509′	20·609′	..	0·60′	..	..
Meghna .. Bhairab Bazar ..	6-24 a.m. ..	11·46′	1·61′	13·07′	0·13′	..	10·44′	..
Meghna .. Chandpur ..	....	..	1·61′	..	..	..	6·44′	..
Lakhya .. Narayanganj ..	7 a.m. ..	15·55′	−5·59′	9·96′	..	0·08′	9·58′	13·33′
Madaripur Bil Route .. Takerhat ..	6-42 a.m. ..	5·85′	0·00′	5·85′	..	0·15′	5·95′	..
Damodar .. Edilpur ..	6 a.m. ..	−0·71′	92·58′	91·87′	Steady		93·00′	..

Statement showing the daily gauge readings of certain rivers at the stations named below for the 10th June 1931.

Name of river and place where readings are taken.	Hour.	Reading on gauge	Value of zero referred to P. W. D. datum.	Height above P. W. D. datum.	Compared with previous day's height.		Height above P. W. D. datum on same date in—	
					Rise.	Fall.	1930.	1929.
Ganges .. Monghyr	6 a.m. ..	100·17′	0·00′	100·17′	..	0·08′	100·50′	102·40′
Ganges .. Rajmahal	6 „ ..	60·60′	0·00′	60·60′	0·40′	..	59·40′	61·60′
Ganges .. Goalundo	8-30 a.m. ..	15·60′	1·409′	17·009′	0·10′	..	14·209′	17·709′
Bhagirathi .. Swarupganj	3 p.m. ..	4·75′	0·00′	4·75′	0·60′	..	4·96′	6·98′
Brahmaputra .. Dibrugarh	8 a.m. ..	28·40′	301·50′	329·90′	0·40′	..	332·60′	335·21′
Brahmaputra .. Gauhati	.... ..	..	136·958′	..	..	..	148·358′	152·358′
Brahmaputra .. Serajganj	12-24 p.m. ..	34·00′	1·509′	35·509′	0·20′	..	30·209′	33·409′
Dhaleswari .. Sabhar	7 a.m. ..	12·10′	0·00′	12·10′	0·10′	..	11·50′	..
Meghna .. Fenchuganj	7 a.m. ..	19·20′	1·509′	20·709′	0·10′	..	..	..
Meghna .. Bhairab Bazar	6-24 a.m. ..	11·42′	1·61′	13·03′	0·04′	..	11·86′	..
Meghna .. Chandpur	.... ..	..	1·61′	..	..	..	6·53′	..
Lakhya .. Narayanganj	7 a.m. ..	15·83′	−5·59′	18·24′	0·28′	..	10·08′	13·29′
Madaripur Bil Route .. Takerhat	6-54 p.m. ..	6·30′	0·00′	6·30′	0·45′	..	6·15′	..
Damodar .. Edilpur	6 a.m. ..	−0·67′	92·58′	91·91′	0·04′	..	92·95′	..

Statement showing the daily gauge readings of certain rivers at the stations named below for the 11th June 1931.

Name of river and place where readings are taken.	Hour.	Reading on gauge.	Value of zero referred to P. W. D. datum.	Height above P. W. D. datum.	Compared with previous day's height.		Height above P. W. D. datum on same date in—	
					Rise.	Fall.	1930.	1929.
Ganges .. Monghyr ..	6 a.m. ..	100·08′	0·00′	100·08′	..	0·09′	100·70′	102·20′
Ganges .. Rajmahal ..	6 a.m. ..	61·00′	0·00′	61·00′	0·40′	..	59·60′	62·00′
Ganges .. Goalundo ..	8-30 a.m. ..	15·90′	1·409′	17·309′	0·30′	..	14·409′	18·209′
Bhagirathi .. Swarupganj ..	6 a.m. ..	4·78′	0·00′	4·78′	0·03′	..	5·82′	7·55′
Brahmaputra .. Dibrugarh ..	8 a.m. ..	30·30′	301·50′	331·80′	1·90′	..	333·50′	337·81′
Brahmaputra .. Gauhati ..	....	..	136·958′	..	..	..	148·758′	153·158′
Brahmaputra .. Serajganj ..	12-24 p.m. ..	34·20′	1·509′	35·709′	0·20′	..	30·809′	34·209′
Dhaleswari .. Sabhar ..	7 a.m. ..	12·50′	0·00′	12·50′	0·40′	..	11·90′	..
Meghna .. Fenchuganj ..	7 a.m. ..	19·80′	1·509′	21·309′	0·60′	..	..	..
Meghna .. Bhairab Bazar ..	6-24 a.m. ..	11·42′	1·61′	13·03′	Steady		12·36′	..
Meghna .. Chandpur ..	....	..	1·61′	..	..	..	6·86′	..
Lakhya .. Narayanganj ..	7 a.m. ..	16·25′	−5·59′	10·66′	0·42′	..	10·74′	13·16′
Madaripur Bil Route .. Takerhat ..	7-2 p.m. ..	6·50′	0·00′	6·50′	0·20′	..	6·30′	..
Damodar .. Edilpur ..	6 a.m. ..	−0·67′	92·58′	91·91′	Steady		93·41′	..

FORM C—BENGAL.

STATEMENT OF COTTON PRESSED IN THE BENGAL PRESIDENCY FOR THE WEEK ENDING 19th JUNE 1931.

[Section 5 (2) of the Cotton Ginning and Pressing Factories Act, 1925.]

Name of Division or block.	Number of bales pressed.				District included in the block.
	During the week.	During the corresponding week, last year.	Since 1st September 1930 (the date prescribed by the Local Government as the commencement of the season).	During the corresponding period, last year	
The Bengal Presidency	1,209 or 1,191·58 bales of 400 lbs. each.	1,071	27,787	27,089	All districts in the Presidency.

J. B. McBRIDE,
Chief Inspector of Factories, Bengal (offg.).

DISTRICT REPORTS ON WEATHER AND CROPS.

For the week ending on the 24th June 1931.

Summary.—During the week light to moderate rainfall was general. Field operations for winter paddy are progressing under favourable conditions. Weeding of autumn crops is approaching completion. Harvesting of low land autumn paddy has commenced in some East and North Bengal districts. Prospects of standing crops are reported to be fair. Distress continues to prevail in parts of Nadia, Rangpur, Bogra and Pabna where the number of persons attending the test relief works was 1,626, 657, 721 and 3,104, respectively. The number of persons receiving gratuitous relief was 1,840 in Rangpur. Distribution of agricultural loans continues in the affected districts. The average price of common rice for the Province has fallen by about 0·34 per cent. as compared with that of the previous week.

Serial No.	District and subdivision.	Rainfall.	Price of common rice, in seers, per rupee.		Character of the weather, condition of crops, etc.
			This week.	Previous week.	
1	2	3	4	5	6
		Inches.			
1	24-Parganas ..	1·01	10	10	Weather seasonable. Fodder and water are sufficient. Transplantation of paddy seedlings is going on in Sadar, Basirhat and Diamond Harbour subdivisions.
	Diamond Harbour.	3·25	10½	10½	
	Barrackpore ..	1·21	9	9	
	Baraset ..	2·50	9	9	
	Basirhat ..	3·36	9½	9½	
2	Nadia ..	1·14	9½	9½	Weather seasonable. Rs. 55,000 have been distributed as agricultural loans and another Rs. 25,000 more have been sanctioned. 1,626 persons attended the test relief works in six centres during the week ending 20th June.
	Kushtia ..	1·02	10	10	
	Meherpur ..	0·51	8 13/16	8 13/16	
	Chuadanga ..	0·38	9¼	9¼	
	Ranaghat ..	1·80	10	10	
3	Murshidabad ..	3·03	11	11	Weather seasonable. Prospects of crops are fair. Fodder and water are sufficient. Cattle-disease reported from thana Sagardighi.
	Lalbagh ..	0·55	10	10½	
	Jangipur ..	1·84	12	12	
	Kandi ..	1·26	12½	12½	
4	Jessore ..	2·01	9	9	Weather seasonable. Sowing of jute and *aus* paddy is over. Fodder and water are sufficient.
	Jhenidah ..	0·29	9	9	
	Magura ..	1·05	9	9	
	Narail ..	0·23	10	10	
	Bongaon ..	1·08	8	8	
5	Khulna ..	0·71	10½	10½	Weather seasonable; its effects on crops are fair. Fodder and water are sufficient. Export and import of rice continue slowly.
	Satkhira ..	1·41	9⅞	9⅞	
	Bagerhat ..	0·88	8½	8½	

Serial No.	District and subdivision.	Rainfall.	Price of common rice, in seers, per rupee.		Character of the weather, condition of crops, etc.
			This week.	Previous week.	
1	2	3	4	5	6
		Inches.			
6	Burdwan ..	1·15	11	11	Weather seasonable. Fodder and water are sufficient.
	Asansol ..	0·75	9½	9½	
	Katwa ..	4·65	12	12	
	Kalna ..	2·46	11½	11½	
7	Birbhum ..	1·95	13	12½	Weather hot and cloudy. Cattle-disease is reported from Murarai thana. Fodder and water are sufficient.
	Rampurhat ..	0·88	12½	12½	
8	Bankura ..	1·97	10¾	10½	Weather hot and cloudy. Prospects of standing crops are fair. Fodder and water are sufficient.
	Vishnupur ..	1·29	12	12	
9	Midnapore ..	2·04	13½	13	Weather seasonable. Sowing of paddy has commenced. Fodder and water are sufficient.
	Contai ..	3·44	12	11	
	Tamluk ..	2·14	10	10	
	Ghatal ..	2·40	12¼	12¼	
	Jhargram ..	1·93	11¾	11¾	
10	Hooghly ..	0·98	10	9¾	Weather seasonable. Jute and *aus* paddy plants are thriving. Fodder is sufficient.
	Serampore ..	1·00	9¾	9¾	
	Arambagh ..	2·33	12½	12½	
11	Howrah ..	1·18	8	8	Weather seasonable; its effects on agricultural operations are good. No large import or export. Fodder and water are sufficient.
	Uluberia ..	2·90	10¾	10¾	
12	Rajshahi (Rampur-Boalia).	1·61	9¾	10¼	Weather cloudy.
	Naogaon ..	1·38	10¾	10¾	
	Nator ..	0·20	9¾	9½	
13	Dinajpur ..	0·86	10	10	Weather seasonable; its effects on agricultural operations are favourable. Prospects of standing crops are fair. Fodder and water are sufficient. Cattle-disease is reported from Dhamoirhat and Phulbari police-stations.
	Thakurgaon ..	1·55	11	11	
	Balurghat ..	0·87	12	13	
14	Jalpaiguri ..	3·75	7	6½	The effects of weather are not favourable to jute. Fodder and water are sufficient.
	Alipur ..	3·21	8	8	
15	Darjeeling ..	4·36	7	7	Potatoes and maize are thriving. Potatoes are being harvested in places. Fodder and water are sufficient. Cattle-disease exists at places.
	Kurseong ..	6·10	7	7	
	Siliguri ..	10·52	10½	10	
	Kalimpong ..	2·83	8	8	

Serial No.	District and subdivision.	Rainfall.	Price of common rice, in seers, per rupee.		Character of the weather, condition of crops, etc.
			This week.	Previous week.	
1	2	3	4	5	6
		Inches.			
16	Rangpur ..	1·30	9	9½	Weather cloudy. Prospects of standing crops are fair. Transplantation of winter paddy and harvesting of jute and *aus* paddy have commenced. Fodder and water are sufficient 657 persons attended the test relief works. Number of persons receiving gratuitous relief was 1,840.
	Nilphamari ..	0·36	10¼	(*n*)	
	Kurigram ..	1·40	10 11/16	10⅝	
	Gaibandha ..	2·60	10	(*n*)	
17	Bogra ..	0·17	9¾	9¾	Weather cloudy. Condition of crop is satisfactory. Situation has improved considerably as *aus* crops are matured. Test relief works are going on in affected parts only. The poor and helpless widows and disabled persons are getting help from relief committees. Number of persons attending the test relief works amounts to 721.
18	Pabna ..	0·37	9½	9½	Export and import are normal. Condition of cattle is well. Fodder and water are sufficient. Prospects of standing crops are fair. 3,104 persons attended the test relief works during the week ending the 20th June 1931. Total amount paid up to date Rs. 25,043-15-9 only.
	Sirajganj ..	2·18	10	10	
19	Malda ..	1·08	10¼	10	Weather seasonable. Prospects of standing crops are not good. Fodder and water are sufficient.
20	Cooch Behar ..	1·40	10	10	Weather cloudy. Harvesting of *aus* paddy and transplantation of *haimanti* seedlings are going on. Prospects of standing crops are fair. Fodder and water are sufficient.
21	Dacca ..	1·54	8¼	8¼	Rainfall at North Sadar (Kapasia) 9·28. Weather seasonable. Condition of jute on the whole is satisfactory. Harvesting of *aus* paddy has begun. Fodder and water are sufficient.
	Manikganj ..	2·40	9½	9½	
	Narayanganj	1·06	9	9	
	Munshiganj ..	1·44	9	9	
22	Mymensingh ..	1·41	9	9	Weather seasonable. Prospects of standing crops are fair. Fodder and water are adequate.
	Jamalpur ..	1·60	8¾	8¾	
	Tangail ..	0·75	9	9	
	Netrakona ..	7·99	9½	9½	
	Kishorganj ..	0·97	9 3/16	9 3/16	

(*n*) Not reported.

Serial No.	District and subdivision.	Rainfall.	Price of common rice, in seers, per rupee.		Character of the weather, condition of crops, etc
			This week.	Previous week.	
1	2	3	4	5	6
		Inches.			
23	Faridpur ..	0·18	8½	8½	Weather seasonable. Prospects of standing crops are fair. No large import or export. Stock of rice is sufficient. Fodder and water are sufficient.
	Goalundo (Rajbari).	0·33	9	9	
	Madaripur ..	0·98	9½	9½	
	Gopalganj (*a*)	1·29	8½	8½	
24	Bakarganj (Barisal).	1·60	9	9	Weather seasonable Fodder and water are sufficient. Prospects of standing crops are good. Cattle-disease is subsiding in Pirojpur subdivision.
	Pirojpur ..	3·24	9½	10	
	Patuakhali ..	5·97	10	10	
	Dakshin Shabazpur (Bhola).	6·04	9½	9⅞	
25	Chittagong ..	1·15	10 10½*	10 10½*	Weather seasonable. Prospects of standing *aus* crops fair. Fodder and water are sufficient. *Panga* salt sells at 16 seers per rupee at Sadar.
	Cox's Bazar ..	(*n*)	(*n*)	9½	
26	Tippera (Comilla).	1·21	9¾	8⅞	Prospects of standing crops are fair.
	Brahmanbaria	1·10	10	8 15/16	
	Chandpur ..	0·86	10	10	
27	Noakhali ..	2·97	9	10	Weather hot and cloudy.
	Feni ..	0·92	9	10	
28	Chittagong Hill Tracts.	3·67	13	13	Weather seasonable.
29	Tripura State	0·21	8	8	Weather seasonable. Fodder and water are sufficient Cleansed cotton sells at Rs. 7½ to Rs. 13½ per maund and jute at Rs. 2 to Rs. 3 per maund.

* Burma rice. (*n*) Not reported

(*a*) The rainfall at Haridaspur, which is very near to Gopalganj, is not shown here.

DACCA, *the 27th June 1931.* J. C. ROY, for *Director of Agriculture, Bengal.*

Wholesale prices-current of certain articles in the Calcutta mart of Bengal for the first half of June 1931.

Mart.	Wheat.			Raw cotton.		
	Present return.	Next preceding return.	Corresponding return of last year.	Present return.	Next preceding return.	Corresponding return of last year.
1	2	3	4	5	6	7
	Rs. A. P.	Rs. A. P.	Rs. A. P.	Rs. A. P.	Rs. A. P.	Rs. A. P.
Calcutta	2 12 0	2 12 0	5 0 0	17 4 0	18 12 0	22 0 0

Mart.	Coal.			Raw jute (weighted average).			*Gur* (sugarcane).		
	Present return.	Next preceding return.	Corresponding return of last year.	Present return.	Next preceding return.	Corresponding return of last year.	Present return.	Next preceding return.	Corresponding return of last year.
	8	9	10	11	12	13	14	15	16
	Rs. A. P.	Rs. A. P.	Rs. A. P.	Rs. A. P.	Rs. A. P.	Rs. A. P.	Rs. A. P.	Rs. A. P.	Rs. A. P.
Calcutta	0 6 6	0 6 6	0 6 6	4 12 3	4 10 0	7 4 0	5 8 0 to 6 8 0	5 8 0 to 6 8 0	8 8 0

J. C. ROY, for *Director of Agriculture, Bengal.*

DACCA, *the 27th June 1931.*

Prices-current (retail) of common rice and salt in the districts of Bengal for the first half of June 1931.

Districts and Marts.	Quantity per rupee in seers of eighty tolas.								
	Common rice.						Salt.		
	Average.			Cheapest.					
	Present return.	Next preceding return.	Corresponding return of last year.	Present return.	Next preceding return.	Corresponding return of last year.	Present return.	Next preceding return.	Corresponding return of last year.
	S. Ch.	S. Ch.	S. Ch.	S. Ch.	S. Ch.	S. Ch.	S. Ch.	S. Ch.	S. Ch.
Presidency Division.									
24-Parganas—									
1 Chetla Hat ..	9 6	9 0	6 15	10 10	10 0	7 5	14 0	14 0	14 0
2 Mogra Hat ..	12 5	11 7	7 9	13 5	12 5	8 7	14 8	14 8	16 0
3 Calcutta-Beliaghata	7 4	7 4	4 8	9 6	9 6	5 0	13 0	13 0	10 8†
Nadia—									
4 Goari	9 6	9 6	6 8	9 12	9 12	7 8	13 8	13 8	13 8
5 Ranaghat ..	9 12	9 12	7 4	10 0	10 0	7 8	13 0* / 16 0	13 0* / 16 0	13 0* / 16 0
Murshidabad—									
6 Berhampore ..	11 8	11 0	7 4	12 0	11 4	7 8	14 0	13 0	16 0
7 Kandi	12 8	12 8	8 0	13 0	13 0	8 4	16 0	16 0	15 0
8 Jangipur ..	10 0	10 0	8 4	11 0	11 0	8 8	16 0	16 0	16 0
Jessore—									
9 Sadar	9 0	9 0	7 0	10 6	9 8	8 0	15 0* / 16 0	13 0* / 16 0	16 0†
10 Bongaon ..	8 0	8 0	7 4	9 6	9 6	8 14	13 0* / 16 0	13 0* / 16 0	13 0†
Khulna—									
11 Sadar	11 0	11 0	6 4	13 0	13 0	7 0	16 0†	16 0†	14 8
12 Bagerhat ..	8 8	8 8	7 0	9 8	9 8	7 4	13 8	13 8	12 8
Burdwan Division.									
Burdwan—									
13 Sadar	8 8	8 8	8 0	11 8	11 8	9 8	16 0	16 0	16 0
14 Kalna	10 0	9 8	7 12	10 2	10 0	7 14	16 0	16 4	15 0
Birbhum—									
15 Suri	12 8	12 0	7 8	13 0	13 0	8 0	14 0	13 0	13 0
16 Rampurhat ..	11 8	11 8	8 0	12 8	12 8	9 0	16 0	16 0	16 0
Bankura—									
17 Sadar	11 0	11 8	8 4	12 0	13 0	8 12	15 0	15 0	14 0
18 Vishnupur ..	10 0	12 0	7 0	11 0	13 0	7 8	12 8	12 12	13 0

* Karkach.

N.B.—The prices of Karkach and Liverpool salt tally with each other in marts marked †.

Prices-current (retail) of common rice and salt in the districts of Bengal for the first half of June 1931.

Districts and Marts.	Quantity per rupee in seers of eighty tolas.								
	Common rice.						Salt.		
	Average.			Cheapest.					
	Present return.	Next preceding return.	Corresponding return of last year.	Present return.	Next preceding return.	Corresponding return of last year.	Present return.	Next preceding return.	Corresponding return of last year.
BURDWAN DIVISION—*concld.*	S. CH.	S. CH.	S. CH.	S. CH.	S. CH.	S. CH.	S. CH.	S. CH.	S. CH.
Midnapore—									
19 Sadar	13 2	13 8	8 0	13 12	14 0	8 8	13 0	16 0	12 0
20 Contai	13 0	12 0	8 0	14 0	13 8	9 0	16 0	16 0	12 0
Hooghly—									
21 Sadar	9 12	10 0	7 8	10 0	10 8	8 12	16 0	16 0	13 0
22 Arambagh ..	11 12	11 12	8 8	12 12	12 12	9 0	12 14* 15 0	12 14* 15 0	11 0* 13 8
Howrah—									
23 Sadar	8 0	8 0	7 8	10 8	10 0	8 0	16 0	16 0	15 0
24 Uluberia ..	10 12	10 8	7 0	11 8	12 0	9 0	18 0	18 0	16 8
RAJSHAHI DIVISION.									
Rajshahi—									
25 Rampur-Boalia ..	9 12	9 12	6 12	10 10	10 8	7 8	12 0†	12 0†	13 0
26 Nator	9 8	9 12	6 6	10 8	10 8	6 12	12 0†	12 0†	12 0†
27 Dinajpur—Railway Hat	12 0	12 0	7 0	13 0	13 0	7 8	14 0	14 0	14 0
28 Jalpaiguri—Sadar ..	9 0	8 8	6 0	9 8	9 8	7 0	13 0	12 0†	11 0†
Darjeeling—									
29 Sadar	9 0	9 0	6 0	10 0	10 0	7 4	6 0* 10 0	6 0* 10 0	6 0* 10 0
30 Siliguri ..	7 0	7 0	5 4	10 0	10 0	7 0	8 0* 13 0	8 0* 13 0	11 0
Rangpur—									
31 Sadar	9 8	9 8	5 0	10 12	10 12	6 6	12 0†	12 0†	8 0†
32 Nilphamari ..	10 0	10 0	6 4	(a)	(a)	(a)	15 0†	16 0†	10 0†
33 Bogra—Sadar ..	10 8	9 12	6 0	10 14	10 8	6 8	15 0	15 0	12 0†
Pabna—									
34 Sadar	9 8	9 8	6 0	11 8	11 8	6 0	12 8	12 8	12 8*
35 Serajganj ..	10 8	10 8	5 11	11 8	11 4	7 0	14 0*	13 12*	12 0*
Malda—									
36 Sadar	10 0	10 0	7 0	10 8	10 8	8 0	14 0*	14 0*	14 0†
37 Balia—Nawabganj	10 8	9 8	7 0	11 0	(a)	7 12	15 0	15 0	16 0

(a) Not available.

* Karkach.

N.B.—The prices of Karkach and Liverpool salt tally with each other in marts marked †.

Prices-current (retail) of common rice and salt in the districts of Bengal for the first half of June 1931.

Districts and Marts.	Quantity per rupee in seers of eighty tolas.								
	Common rice.						Salt.		
	Average.			Cheapest.					
	Present return.	Next preceding return.	Corresponding return of last year.	Present return.	Next preceding return.	Corresponding return of last year.	Present return.	Next preceding return.	Corresponding return of last year.
	S. Ch.	S. Ch.	S. Ch.	S. Ch.	S. Ch.	S. Ch.	S. Ch.	S. Ch.	S. Ch.
Dacca Division.									
Dacca—									
38 Sadar	8 0	8 0	6 2	9 0	9 0	7 8	13 12* / 14 4	13 12* / 14 4	13 0†
39 Mirkadim ..	9 0	9 0	7 0	9 8	9 8	(a)	14 8	14 8	16 0
Mymensingh—									
40 Nasirabad ..	9 0	9 0	6 0	10 0	10 0	6 4	12 0*	13 0*	12 0*
41 Netrakona ..	13 0	10 0	7 0	14 0	11 0	8 0	12 8* / 14 8	11 0* / 13 0	10 0* / 12 8
Faridpur—									
42 Sadar	8 8	8 8	6 0	9 0	9 0	6 8	11 0*	11 0*	11 0
43 Rajbari ..	9 0	9 0	6 0	10 8	10 8	7 0	12 0†	12 0†	12 0
Bakarganj—									
44 Barisal ..	9 0	9 0	5 10	10 8	10 8	6 5	16 0	17 8	14 8
45 Pirojpur ..	10 0	10 4	6 4	10 4	10 8	6 8	11 0†	11 0†	13 0
Chittagong Division									
Tippera—									
46 Comilla ..	8 15	8 6	5 5	10 0	8 14	5 14	13 5	14 15	12 14
47 Chandpur ..	9 8	9 8	6 2	10 0	10 0	6 12	13 4	14 0	13 4
Noakhali—									
48 Kalitara Hat ..	8 3	8 8	5 4	10 0	10 0	5 8	13 0	13 0	13 0
49 Feni Hat ..	9 0	8 0	6 0	9 8	8 8	6 8	7 0* / 13 0	7 0* / 13 0	7 0* / 13 0
Chittagong—									
50 Sadar	10 0	10 0	7 8	12 0	12 8	8 8	18 0	18 0	16 8
51 Cox's Bazar ..	9 0	9 0	5 0	10 0	10 0	(a)	14 0	14 0	13 0
52 Chittagong Hill Tracts —Rangamati ..	10 0	10 0	7 0	11 0	11 0	7 8	5 8* / 12 0	5 8* / 12 0	5 8* / 12 0

(a) Not available. * Karkach.

N.B.—The prices of Karkach and Liverpool salt tally with each other in marts marked †.

DACCA, *the 27th June 1931* J. C. ROY, for *Director of Agriculture, Bengal.*

Statement showing the daily gauge readings of certain rivers at the stations named below for the 12th June 1931.

Name of river and place where readings are taken.	Hour.	Reading on gauge.	Value of zero referred to P. W. D. datum.	Height above P.W.D. datum.	Compared with previous day's height.		Height above P. W. D. datum on same date in—	
					Rise.	Fall.	1930	1929.
Ganges .. Monghyr ..	6 a.m. ..	100·10′	0·00′	100·10′	..	..	100·80′	..
Ganges .. Rajmahal ..	6 „ ..	61·40′	0·00′	61·40′	..	..	59·85′	62·50′
Ganges .. Goalundo ..	8-30 a.m. ..	16·10′	1·409′	17·509′	0·20′	..	14·909′	18·809′
Bhagirathi .. Swarupganj ..	6 a.m. ..	4·90′	0·00′	4·90′	..	..	5·94′	7·52′
Brahmaputra .. Dibrugarh ..	8 a.m. ..	33·60′	301·50′	335·10′	3·30′	..	334·20′	..
Brahmaputra .. Gauhati ..	8 „	11·70′	136·958′	148·658′	..	..	149·258′	155·558′
Brahmaputra .. Sirajganj ..	12-24 p.m. ..	34·60′	1·509′	36·109′	0·40′	..	31·509′	35·309′
Dhaleswari .. Sabhar ..	7 a.m. ..	12·71′	0·00′	12·71′	0·20′	..	12 20′	..
Meghna .. Fenchuganj ..	7 a.m. ..	21·00′	1·509′	22·509′	1·20′	..	..	..
Meghna .. Bhairab Bazar ..	6-24 a.m. ..	11·58′	1·61′	13·19′	0·17′	..	13·61′	..
Meghna .. Chandpur ..	1-24 p.m. ..	5·92′	1·61′	7·53′	0·08′	..	7·28′	..
Lakhya .. Narayanganj ..	7 a.m. ..	16·83′	−5·59′	11·24′	..	..	11·58′	13·02′
Madaripur Bil Route .. Takerhat ..	7-4 p.m. ..	6·70′	0·00′	6·70′	0·20′	..	6·50′	..
Damodar .. Edilpur ..	6 a.m. ..	−0·58′	92·58′	92·00	0·04′	..	93·33′	..

Statement showing the daily gauge readings of certain rivers at the stations named below for the 13th June 1931.

Name of river and place where readings are taken.	Hour.	Reading on gauge.	Value of zero referred to P. W. D. datum.	Height above P. W. D. datum.	Compared with previous day's height.		Height above P. W. D. datum on same date in—	
					Rise.	Fall.	1930.	1929.
Ganges .. Monghyr ..	6 a.m. ..	100·10′	0·00′	100·10′	Steady.		101·00′	..
Ganges .. Rajmahal ..	6 „ ..	61·55′	0·00′	61·55′	0·15′	..	60·00′	63·20′
Ganges .. Goalundo ..	8-30 „ ..	16·50′	1·409′	17·909′	0·40′	..	15·809′	19·709′
Bhagirathi .. Swarupganj ..	7 a.m. ..	5·15′	0·00′	5·15′	0·25′	..	5·29′	6·86′
Brahmaputra .. Dibrugarh ..	8 a.m. ..	33·60′	301·50′	335·10′	Steady.		335·30′	..
Brahmaputra .. Gauhati ..	8 „ ..	12·40′	136·958′	149·358′	0·70′	..	150·558′	..
Brahmaputra .. Serajganj ..	12-24 p.m.	34·90′	1·509′	36·409′	0·30′	..	32·409′	..
Dhaleswari .. Sabhar ..	7 a.m. ..	13·00′	0·00′	13·00′	0·29′	..	12·60′	..
Meghna .. Fenchuganj ..	7 a.m. ..	21·70′	1·509′	23·209′	0·70′	..	28·509′	..
Meghna .. Bhairab Bazar ..	6-24 „ ..	11·92′	1·61′	13·53′	0·34′	..	14·36′	..
Meghna .. Chandpur ..	2-9 p.m.	6·33′	1·61′	7·94′	0·41′	..	7·19′	..
Lakhya .. Narayanganj ..	7 a.m. ..	16·96′	—5·59′	11·37′	0·13′	..	11·83′	..
Madaripur Bil Route .. Takerhat ..	7-4 p.m.	6·75′	0·00′	6·75′	..	0·05′	6·80′	..
Damodar .. Edilpur ..	6 a.m. ..	—0·79′	92·58′	91·83′	..	0·17′	93·33′	..

Statement showing the daily gauge readings of certain rivers at the stations named below for the 14th June 1931.

Name of river and place where readings are taken.	Hour.	Reading on gauge.	Value of zero referred to P. W. D. datum	Height above P. W. D. datum.	Compared with previous day's height.		Height above P. W. D. datum on same date in—	
					Rise.	Fall.	1930.	1929.
Ganges .. Monghyr ..	6 a m ..	100·10′	0·00′	100·10′	Steady.		101·60′	105·00′
Ganges .. Rajmahal ..	6 ,, ..	61·50′	0·00′	61·50′	..	0·05′	60·60′	64·00′
Ganges .. Goalundo ..	8-30 a.m. ..	17·10′	1·409′	18·509′	0·60′	..	16·509′	21·009′
Bhagirathi .. Swarupganj ..	7 a.m ..	5·31′	0·00′	5·31′	0·16′	..	4·79′	6·26′
Brahmaputra .. Dibrugarh ..	8 a.m. ..	31·90′	301·50′	333·40′	..	1·70′	335·30′	336·76′
Brahmaputra .. Gauhati ..	....	16·50′	136·958′	153·458′	4·10′	..	152·458′	159·658′
Brahmaputra .. Serajganj ..	12-24 p. m. ..	35·30′	1·509′	36·809′	0·40′	..	33·409′	37·509′
Dhaleswari .. Sabhar ..	7 a.m. ..	13·21′	0·00′	13·21′	0·21′	..	13·00′	14·70′
Meghna .. Fenchuganj ..	7 a.m. ..	22·30′	1·509′	23·809′	0·60′	..	28·959′	..
Meghna .. Bhairab Bazar ..	6-24 a m. ..	12·00′	1·61′	13·61′	0·08	..	14·28′	18·53′
Meghna .. Chandpur ..	2-54 p m. ..	6·83′	1·61′	8·44′	0·50′	..	7·44′	10·44′
Lakhya .. Narayanganj ..	7 a.m. ..	17·21′	−5·59′	11·62′	0·25′	..	11·91′	13·20′
Madaripur Bil Route .. Takerhat ..	10-31 a.m. ..	6·80′	0·00′	6·80′	0·05′	..	6·80′	8·55′
Damodar .. Edilpur ..	6 a.m. ..	−0·75′	92·58′	91·83′	Steady.		93·29′	95·08′

Statement showing the daily gauge readings of certain rivers at the stations named below for the 15th June 1931.

Name of river and place where readings are taken.	Hour.	Reading on gauge.	Value of zero referred to P. W. D. datum.	Height above P. W. D. datum.	Compared with previous day's height.		Height above P. W. D. datum on same date in—	
					Rise.	Fall.	1930.	1929.
Ganges .. Monghyr ..	6 a.m. ..	100·10′	0·00′	100·10′	Steady.		100·90′	106·20′
Ganges .. Rajmahal ..	6 „ ..	61·45′	0·00′	61·45′	..	0·05′	61·10′	64·70′
Ganges .. Goalundo ..	8-30 a.m. ..	17·50′	1·409′	18·909′	0·40′	..	17·209′	22·009′
Bhagirathi .. Swarupganj ..	8 a.m. ..	5·68′	0·00′	5·68′	0·37′	..	4·44′	5·86′
Brahmaputra .. Dibrugarh ..	8 a.m. ..	30·70′	301·50′	332·20′	..	1·20′	336·30′	336·71′
Brahmaputra .. Gauhati ..	....	18·40′	136·958′	155·358′	1·90′	..	154·158′	160·158′
Brahmaputra .. Serajganj ..	12-24 p.m. ..	35·50′	1·509′	37·009′	0·20′	..	34·209′	38·509′
Dhaleswari .. Sabhar ..	7 a.m. ..	13·30′	0·00′	13·30′	0·10′	..	13·30′	15·10′
Meghna .. Fenchuganj ..	7 a.m. ..	22·80′	1·509′	24·309′	0·50′	..	29·559′	....
Meghna .. Bhairab Bazar ..	6 a.m. ..	12·17′	1·61′	13·78′	0·17′	..	14·19′	18·95′
Meghna .. Chandpur ..	3-54 p.m. ..	7·33′	1·61′	8·94′	0·50′	..	7·78′	10·28′
Lakhya .. Narayanganj ..	7 a.m. ..	17·30′	−5·59′	11·71′	0·09′	..	12·12′	13·33′
Madaripur Bil Route .. Takerhat ..	10-15 a.m. ..	6·80′	0·00′	6·80′	Steady.		6·80′	8·70′
Damodar .. Edilpur ..	6 a.m. ..	−0·62′	92·58′	91·96′	0·13′	..	93·29′	95·00′

Statement showing the daily gauge readings of certain rivers at the stations named below for the 16th June 1931.

Name of river and place where readings are taken.	Hour.	Reading on gauge.	Value of zero referred to P. W. D. datum.	Height above P. W. D. datum.	Compared with previous day's height.		Height above P. W. D. datum on same date in—	
					Rise	Fall.	1930.	1929.
Ganges .. Monghyr ..	6 a.m. ..	100·40′	0·00′	100·40′	0·30′	..	100·80′	104·30′
Ganges .. Rajmahal ..	6 „ ..	61·25′	0·00′	61·25′	..	0·20′	61·25′	65·30′
Ganges .. Goalundo ..	8-30 a.m. ..	17·80′	1·409′	19·209′	0·30′	..	17·709′	22·809′
Bhagirathi .. Swarupganj ..	9 a.m. ..	5·69′	0·00′	5·69′	0·01′	..	4·40′	5·76′
Brahmaputra .. Dibrugarh ..	8 a.m. ..	32·10′	301·50′	333·60′	1·40′	..	335·00′	335·96′
Brahmaputra .. Gauhati ..	....	19·20′	136·958′	156·158′	0·80′	..	154·658′	160·458′
Brahmaputra .. Serajganj ..	12-24 p.m. ..	36·10′	1·509′	37·609′	0·60′	..	35·209′	39·209′
Dhaleswari .. Sabhar ..	7 a.m. ..	13·70′	0·00′	13·70′	0·40′	..	13·70′	15·70′
Meghna .. Fenchuganj ..	7 a.m. ..	23·30′	1·509′	24·809′	0·50′	..	30·059′	..
Meghna .. Bhairab Bazar ..	6-24 a.m. ..	12·33′	1·61′	13·94′	0·17′	..	14·44′	..
Meghna .. Chandpur ..	4-54 p.m. ..	7·50′	1·61′	9·11′	0·17′	..	8·36′	10·11′
Lakhyā .. Narayanganj ..	7 a.m. ..	17·67′	−5·59′	11·08′	..	0·63′	12·41′	13·79′
Madaripur Bil Route .. Takerhat ..	11-45 a.m. ..	7·00′	0·00′	7·00′	0·20′	..	7·10′	8·85′
Damodar .. Edilpur ..	6 a.m. ..	−0·67′	92·58′	91·91′	Steady.		93·25′	94·83′

Statement showing the daily gauge readings of certain rivers at the stations named below for the 17th June 1931.

Name of river and place where readings are taken.	Hour.	Reading on gauge.	Value of zero referred to P.W.D. datum.	Height above P. W. D. datum.	Compared with previous day's height.		Height above P. W. D. datum on same date in—	
					Rise.	Fall.	1930.	1929.
Ganges .. Monghyr ..	6 a.m. ..	100·60′	0·00′	100·60′	0·20′	..	100·80′	104·90′
Ganges .. Rajmahal ..	6 „ ..	61·15′	0·00′	61·15′	..	0·10′	61·35′	65·70′
Ganges .. Goalundo ..	8-30 a.m. ..	18·80′	1·409′	20·209′	1·00′	..	18·209′	23·109′
Bhagirathi .. Swarupganj ..	9 a.m. ..	5·73′	0·00′	5·73′	0·04′	..	4·32′	5·85′
Brahmaputra .. Dibrugarh ..	8 a.m. ..	33·30′	301·50′	334·80′	1·20′	..	334·10′	335·41′
Brahmaputra .. Gauhati ..	....	19·40′	136·958′	156·358′	0·20′	..	155·458′	160·158′
Brahmaputra .. Serajganj ..	12-24 p.m. ..	38·00′	1·509′	39·509′	1·90′	..	36·009′	39·5·9′
Dhaleswari .. Sabhar ..	7 a.m. ..	14·40′	0·00′	14·40′	0·70′	..	14·10′	16·30′
Meghna .. Fenchuganj ..	7 a.m. ..	23·60′	1·509′	25·109′	0·30′	..	30·509′	..
Meghna .. Bhairab Bazar ..	6-24 a.m. ..	12·58′	1·61′	14·19′	0·25′	..	14·69′	..
Meghna .. Chandpur ..	5-54 p.m. ..	7·50′	1·61′	9·11′	Steady.		8·61′	10·19′
Lakhya .. Narayanganj ..	7 a.m. ..	18·08′	−5·59′	12·49′	1·41′	..	12·41′	13·93′
Madaripur Bil Route .. Takerhat ..	11-59 a.m. ..	7·20′	0·00′	7·20′	0·20′	..	7·40′	9·00′
Damodar .. Edilpur ..	6 a.m. ..	−0·92′	92·58′	91·66′	..	0·25′	93·20′	94·66′

Statement showing the daily gauge readings of certain rivers at the stations named below for the 18th June 1931.

Name of river and place where readings are taken.	Hour.	Reading on gauge.	Value of zero referred to P. W. D. datum.	Height above P. W. D. datum.	Compared with previous day's height.		Height above P. W. D. datum on same date in—	
					Rise.	Fall.	1930.	1929.
Ganges .. Monghyr ..	6 a.m. ..	100·70′	0·00′	100·70′	0·10′	..	100·90′	104·80′
Ganges .. Rajmahal ..	6 ,, ..	61·20′	0·00′	61·20′	0·05′	..	61·40′	65·80′
Ganges .. Goalundo ..	8-30 a.m. ..	20·00′	1·409′	21·409′	1·20′	..	18·609′	23·309′
Bhagirathi .. Swarupganj ..	10 a.m. ..	5·76′	0·00′	5·76′	0·03′	..	4·50′	6·12′
Brahmaputra .. Dibrugarh ..	8 a.m. ..	33·50′	301·50′	335·00′	0·20′	..	335·80′	334·96′
Brahmaputra .. Gauhati ..	....	19·30′	136·958′	156·258′	..	0·10′	156·558′	159·258′
Brahmaputra .. Serajganj ..	12-24 p.m. ..	39·00′	1·509′	40·509′	1·00′	..	36·509′	39·509′
Dhaleswari .. Sabhar ..	7 a.m. ..	14·80′	0·00′	14·80′	0·40′	..	14·50′	17·00′
Meghna .. Fenchuganj ..	7 a.m. ..	24·00′	1·509′	25·509′	0·40′	..	30·809′	..
Meghna .. Bhairab Bazar ..	6-24 a.m. ..	12·75′	1·61′	14·36′	0·17′	..	14·86′	..
Meghna .. Chandpur ..	6-54 p.m. ..	7·75′	1·61′	9·36′	0·25′	..	8·94′	10·53′
Lakhya .. Narayanganj .	7 a.m. ..	18·33′	−5·59′	12·74′	0·25′	..	12·37′	14·41′
Madaripur Bil Route .. Takerhat ..	12-34 p.m. ..	7·40′	0·00′	7·40′	0·20′	..	7·50′	9·10′
Damodar .. Edilpur ..	6 a.m. ..	−0·67′	92·58′	91·91′	0·25′	..	93·95′	94·62′

Statement of weekly gauge readings on the river Ganges at Rampur Boalia for the week ending the 20th June 1931.

Date.	Hour.	Height of surface above zero of gauge.	Height of surface above P. W. D. datum.	Height of surface above P. W. D. datum on the same date of last year.	Remarks.
1931.					
14th June ..	7 a.m.	....	36·05	36·40	Value of zero = 30·75 P. W. D.
15th „ ..	7 „	....	36·45	36·80	
16th „ ..	7 „	....	36·45	37·40	Zero of gauge referred to B. M. on Rajshahi College step; value 64·73.
17th „ ..	7 „	....	36·15	37·35	
18th „ ..	7 „	....	35·95	37·95	
19th „ ..	7 „	....	35·95	38·05	
20th „ ..	7 „	....	36·10	38·10	

Highest recorded level on 26-8-1879=64·24.
Lowest recorded level on 25-4-1884=32·62.

S. M. HOSSAIN, for *Subdivisional Officer,*
Irrigation Department, Rajshahi.

RAMPUR BOALIA, *the 20th June 1931.*

Statement showing the gauge readings at Dacca Waterworks on the river Buriganga for the week ending 20th June 1931.

Date.	At highest water.		At lowest water.		Commencement of—		Remarks.	
	Time.	Reading.	Time	Reading.	Ebb tide.	Flow tide.	At 7 a.m.	At 5 p.m.
1931.								
14th June ..	10-40	10·1	16-35	9·3	10-50	16-42	9·6	9·4
15th „ ..	11-30	10·5	17-25	9·7	11-40	17-35	9·8	9·9
16th „ ..	12-20	10·7	6-30	9·9	12-30	6-37	10·0	10·2
17th „ ..	13-10	10·8	7-20	10·1	13-20	7-28	10·05	10·4
18th „ ..	14-0	11·0	8-5	10·4	14-10	8-17	10·5	10·7
19th „ ..	14-50	11·4	8-55	10·9	15-0	9-5	11·0	11·3
20th „ ..	15-40	11·7	...	..	15-50	..	11·2	11·6

B. M. on settling tank 30·49 O. M. S. L. Zero is at O. M. S. L.

Notable high and low water-levels of previous years.

		Taken at high tide.			Taken at low tide.
27th August	1906 ..	70·5	23rd February	1907 ..	51·06
5th September	1909 ..	66·86	13th „	1908 ..	51·06
10th August	1910 ..	69·86	12th March	1912 ..	51·06
1st „	1911 ..	68·46	6th „	1914 ..	50·60
13th „	1912 ..	67·16	22nd February	1915 ..	50·30
31st „	1915 ..	69·7	15th „	1916 ..	50·60
8th „	1916 ..	68·1	3rd March	1917 ..	51·0
12th „	1917 ..	67·1	21st February	1918 ..	51·40
13th „	1918 ..	69·12	26th „	1919 ..	50·4
2nd „	1919 ..	66·8	18th „	1920 ..	50·9
8th September	1920 ..	66·9	19th „	1921 ..	50·9
28th July	1921 ..	68·4	8th March	1922 ..	51·05
10th August	1922 ..	68·00	14th „	1923 ..	50·8
31st July	1923 ..	66·15	16th February	1924 ..	50·50
29th August	1924 ..	68·82	5th March	1925 ..	50·9
8th September	1925 ..	68·52	9th February	1926 ..	2·2
15th August	1926 ..	19·6	27th „	1927 ..	2·10
17th September	1927 ..	18·70	16th „	1928 ..	2·2
22nd August	1928 ..	20·0	21st „	1929 ..	2·0
13th July	1929 ..	17·8	24th „	1930 ..	2·3
12th September	1930 ..	18·65			

N. B.—Zero of the gauge at Dacca Waterworks prior to 11 a.m. on the 8th January 1926= −48·51 with reference to P. W. D. datum.

Zero of the gauge at Dacca Waterworks since 11 a.m. on the 8th January 1926=0·00 with reference to P. W. D. datum.

W. R. ROBSON, *Executive Engineer,*
Khulna Division.

KHULNA, *the 27th June 1931.*

Resolution on the Budget Estimates of income and expenditure of the Howrah Bridge for the year 1931-32.

GOVERNMENT OF BENGAL.

Marine Department.

—

DARJEELING, THE 25TH JUNE 1931

— —

RESOLUTION No 477T.Mne.

Read -

The budget estimates of income and expenditure of the Howrah Bridge for the year 1931 32.

Receipts.—The estimate of receipts for the year is placed at Rs. 3,57,428 against the budget and revised estimates of Rs. 3,94,478 and Rs. 3,62,478, respectively, for the previous year. The estimate of receipts from the East Indian Railway for the year is placed at Rs. 2,85,000 against the budget and revised estimates of Rs. 3,25,000 and Rs. 2,85,000. respectively, for the preceding year.

The Bengal Nagpur Railway have again contributed Rs. 26,000 towards the upkeep of the bridge during the year 1931 32.

Expenditure.—The estimate of total ordinary expenditure for the year is Rs. 4,75,464 against the budget and revised estimates of Rs. 5,14,279 and Rs. 4,90,479, respectively, for the previous year. The main items of heavy expenditure are under the head "Maintenance and Repairs" for the purpose of repairing the in-shore pontoons; and provisions of Rs. 98,000 and Rs. 80,000 have been made in the current year's budget for repairs to pontoons, fenders and shieldings and the superstructure, respectively.

Resolved that the budget estimate for 1931 32 be approved, under section 21 of the Howrah Bridge Act, 1871.

By order of the Governor in Council,

E. N. BLANDY,

Secy. to the Govt. of Bengal.

Printed at the Bengal Government Press, Alipore, and published by the Bengal Secretariat Book Depot, Writers' Buildings, in the City of Calcutta, on the 2nd July 1931.

Registered No. C207 *No. 28 of 1931*

The Calcutta Gazette

THURSDAY, JULY 9, 1931.

CONTENTS:

	PAGE.
PART I.—Orders and Notifications by the Governor of Bengal, the Government of Bengal, the High Court, Government Treasury, etc.	785—814
PART IA.—Orders and Notifications by the Government of India republished for general information	175
PART IB.—Educational Notices ..	767—800
PART II.—Advertisements	651—666
PART III.—Acts of the Bengal Legislative Council	*Nil*
PART IV.—Bills introduced in the Bengal Legislative Council, Reports of Select Committees presented or to be presented to that Council, and Bills published before introduction in that Council ..	*Nil*
PART V.—Acts of the Indian Legislature assented to by the Governor General and Ordinances promulgated under section 72 of the Government of India Act ..	*Nil*
PART VI.—Bills introduced in the Council of State and Legislative Assembly, Reports of Select Committees presented to the Council and Assembly and Bills published under Rule 18 of the Indian Legislative Rules	*Nil*
SUPPLEMENT No. 28—	
Cotton Ginning and Pressing—Calcutta Improvement Trust Notice—Weekly gauge-readings—Weekly Weather and Crop Report—Daily gauge-readings	903—917

Part I

Orders and Notifications by the Governor of Bengal, the Government of Bengal, the High Court, Government Treasury, etc.

ORDERS BY THE GOVERNMENT OF BENGAL.

No. 5451A.

Appointments and Transfers.

GENERAL.

24-Parganas.—No. 1285A.D.—25th June 1931.—Babu Braja Nath Ray, Deputy Magistrate and Deputy Collector, on leave, is posted to the headquarters station of the 24-Parganas district.

Bankura.—No. 1331A.D.—26th June 1931.—Babu Ananga Mohan Chakrabatti, Deputy Magistrate and Deputy Collector, Bankura, is appointed temporarily to have charge of the Sadar subdivision of that district.

Burdwan Divn.—No. 5056A.—29th June 1931.—The orders of the 9th June 1931, so far as they relate to the posting of Maulvi Abdul Karim (I), Sub-Deputy Collector, to the Burdwan Division, are cancelled.

Burdwan Divn.—No. 5111A.—30th June 1931.—Babu Kalipada Das Gupta, Sub-Deputy Collector, on leave, is posted to the Burdwan Division.

Hooghly-Howrah.—No. 5114A.—30th June 1931.—Mr. Rakhal Chandra Sen, B.C.S., on leave, is appointed to act, until further orders, as Additional District and Sessions Judge, Hooghly, at Howrah.

Jessore.—No. 5118A.—30th June 1931.—Babu Satish Chandra Ghosh, Deputy Magistrate and Deputy Collector, on leave, is posted to the headquarters station of the Jessore district.

Mymensingh.—No. 5126A.—1st July 1931.—Babu Prabodh Chandra Mazumdar, Deputy Magistrate and Deputy Collector, Mymensingh, is transferred temporarily to the Jamalpur subdivision of that district.

POLICE.

Rajshahi.—No. 1320A.D.—25th June 1931.—Mr. Abu Zafar Obaidullah, who has been selected by His Majesty's Secretary of State for India as a probationary Assistant Superintendent of Police, is appointed by the Governor in Council to be an Assistant District Superintendent of Police for the purposes of Police Act, 1861 (Act V of 1861), and is posted to the Police Training College at Sardah, Rajshahi.

Calcutta.—No. 1342A.D.—26th June 1931.—Mr. James Woolley, Assistant Commissioner of Police, Calcutta, is appointed to act as a Deputy Commissioner of Police, Calcutta, during the absence, on leave, of Mr. J. V. B. Janvrin, or until further orders.

Calcutta.—No. 1347A.D.—26th June 1931.—Mr. George Humble, an Inspector of the Calcutta Police, is appointed temporarily to act as an Assistant Commissioner of Police, Calcutta.

R. N. REID,

Chief Secy. to the Govt. of Bengal (offg.).

Confirmation.

GENERAL.

No. 5067A.—29th June 1931.—Mr. R. N. Reid, C.I.E., I.C.S., is appointed substantively to be a Commissioner of a Division, with effect from the 28th June 1931, *vice* Khan Bahadur Muhammad Abdul Mumin, retired, but will continue to act, until further orders, as Chief Secretary to the Government of Bengal.

R. H. HUTCHINGS,

Dy. Secy. to the Govt. of Bengal.

Leave.

GENERAL.

No. 1322A.D.—25th June 1931.—Babu Surendra Mohan Mitra, Deputy Magistrate and Deputy Collector, is allowed leave on average pay for six weeks, under rule 81 (*b*) (*ii*) of the Fundamental Rules, in extension of the leave granted to him under the orders of the 4th June 1931.

Bankura.—No. 1328A.D.—26th June 1931.—Rai Sahib Shashi Bhusan Bhattacharji, Deputy Magistrate and Deputy Collector, Bankura, is allowed leave on average pay for thirteen days, under rule 81 (*b*) (*ii*) of the Fundamental Rules, with effect from the 13th July 1931.

No. 5048A.—29th June 1931.—Rai Jamini Mohan Mitra Bahadur, Deputy Magistrate and Deputy Collector, is allowed leave on half average pay for six months, under rule 81 (*d*) of the Fundamental Rules, in extension of the leave granted to him under the orders of the 5th February 1931.

Nadia.—No. 5065A.—29th June 1931.—Mr. Sushil Kumar Dey, I.C.S., Assistant Magistrate and Collector, Nadia, was on leave on average pay for thirteen days, under rule 81 (*b*) (*ii*) of the Fundamental Rules, with effect from the 25th May 1931.

Mymensingh.—No. 5078A. — 30th June 1931.—Babu Manoranjan Chaudhuri, Sub-Deputy Collector, Jamalpur, Mymensingh, was on leave on half average pay for one month, under rule 81 (*d*) of the Fundamental Rules, in extension of the leave granted to him under the orders of the 6th December 1930.

POLICE.

Calcutta.—No. 1344A.D.—26th June 1931.—Mr. J. V. B. Janvrin, Deputy Commissioner of Police, Calcutta, is allowed leave on average pay for one month, under rule 81 (*b*) (*i*) of the Fundamental Rules, with effect from the 2nd July 1931.

No. 5146A.—2nd July 1931.—Mr. C. S. Buckner of the Indian Police has been granted by the High Commissioner for India extraordinary leave without allowances on medical certificate for four months.

ECCLESIASTICAL.

Calcutta.—No. 5050A.—29th June 1931.—The Reverend Canon O. W. Birch, Chaplain of St. Stephen's Church, Kidderpore, Calcutta, is allowed leave on half average pay for seven days, under rule 95 of the Fundamental Rules, in extension of the leave granted to him under the orders of the 1st April 1930.

R. N. REID,

Chief Secy. to the Govt. of Bengal (offg.).

POLITICAL DEPARTMENT.

Political.

NOTIFICATION.

No. 11325P.—3rd July 1931.—In exercise of the power conferred by section 99A of the Code of Criminal Procedure, 1898 (Act V of 1898), the Governor in Council hereby declares to be forfeited to His Majesty all copies, wherever found, of a booklet in Hindi entitled "Azadi Ke Dewane" published by Pandit Siva Sampati Upadhyaya, Manager, Mitra and Company, Jalpadevi Road, Benares, and printed at the Arjun Press, Kavir Chawra, Benares, on the ground that the said booklet contains matter which brings or attempts to bring into hatred or contempt and excites or attempts to excite disaffection towards the Government established by law in British India, the publication of which is punishable under section 124A of the Indian Penal Code.

Jails.

NOTIFICATION.

Midnapore.—No. 2523P.J.—1st July 1931.—The portion of land measuring 7 bighas and 36 square feet situated in the extreme south-east corner of the Additional Special Jail at Hijli and bounded on the south and east by the outer fencing of the jail and on the north and west by wire-fencing is excluded from the area of the jail as published in notification No. 230P.J., dated the 20th January 1931.

R. N. REID,
Chief Secy. to the Govt. of Bengal (offg.).

JUDICIAL DEPARTMENT.

No. 5452A.

Powers.

Calcutta.—No. 1341A.D.—26th June 1931.—Mr. James Woolley, officiating Deputy Commissioner of Police, Calcutta, is appointed, under the provisions of section 22 of Act V of 1898, to act as a Justice of the Peace within the limits of the town of Calcutta.

Mymensingh.—No. 5128A.—1st July 1931.—Babu Prabodh Chandra Mazumdar, Deputy Magistrate, Jamalpur, Mymensingh, is vested with powers under section 110 of the Code of Criminal Procedure.

R. N. REID,
Chief Secy. to the Govt. of Bengal (offg.).

Appointments and Transfers.

Burdwan-24-Parganas.—No. 4817J.—25th June 1931.—Babu Kshirada Ranjan Dhar, officiating Additional Subordinate Judge, Asansol, in the district of Burdwan, is appointed to act, until further orders, as Subordinate Judge of the 24-Parganas, *vice* Babu Rajendra Kumar Gupta.

Faridpur-Burdwan.—No. 4819J.—25th June 1931.—Babu Sharat Chandra De, officiating Subordinate Judge, Faridpur, is appointed to act, until further orders, as Additional Subordinate Judge of Asansol, in the district of Burdwan, *vice* Babu Kshirada Ranjan Dhar, transferred.

Faridpur.—No. 4821J.—25th June 1931.—Babu Naresh Chandra Chakrabatti, No. I, additional munsif of Madaripur and Faridpur, now employed at Madaripur, is appointed temporarily to be a munsif in the district of Faridpur, to be ordinarily stationed at Bhanga, during the absence, on leave, of Maulvi Badiuzzaman Ahmad.

Rangpur-Faridpur.—No. 4823J.—25th June 1931.—Maulvi Amiruddin Sarkar, who last acted as a munsif at Gaibandha, in the district of Rangpur, is appointed to act as an additional munsif of Faridpur and Madaripur, but for the present to be employed at Madaripur, *vice* Babu Naresh Chandra Chakrabatti, No. I.

Tippera-Chittagong.—No. 4839J.—26th June 1931.—Babu Indu Bhusan Basu, officiating munsif of Nabinagar, in the district of Tippera, is appointed to act as a munsif in the district of Chittagong, to be ordinarily stationed at North Raojan, during the absence, on leave, of Maulvi Abdul Maleque, or until further orders.

Burdwan.—No. 4891J.—26th June 1931.—In exercise of the powers conferred by sections 14 and 15 and the proviso to section 357 of the Code of Criminal Procedure, 1898 (Act V of 1898), the Governor in Council is pleased—

(*a*) to confer upon Dr. Nishi Kanta Chaudhuri the powers of a Magistrate of the second class, in the district of Burdwan, for a period of three years from the 10th July 1931, in respect to such cases as may be made over to him within the limits of the Asansol subdivision of the said district,

(*b*) to direct that he shall, in addition to sitting singly, sit as a member of the Asansol bench in the said district, and

(*c*) to direct him to take down evidence in the English language.

Burdwan.—No. 4899J.—26th June 1931.—In exercise of the powers conferred by sections 14 and 15 and the proviso to section 357 of the Code of Criminal Procedure, 1898 (Act V of 1898), the Governor in Council is pleased—

(*a*) to confer upon Pandit Krishna Prasad Kalia the powers of a Magistrate of the third class, in the district of Burdwan, for a period of three years from the 10th July 1931,

(*b*) to direct him to sit as a member of the Raniganj bench in the said district, and

(*c*) to direct him to take down evidence in the English language.

24-Parganas-Howrah.—No. 4913J.—27th June 1931.—Babu Basanta Kumar Ray, munsif of Alipore, in the district of the 24-Parganas, is appointed temporarily to act as Subordinate Judge of Howrah, *vice* Babu Phani Bhusan Banarji, appointed to act as Additional District and Sessions Judge, Hooghly, at Howrah.

Khulna-24-Parganas.—No. 4915J.—27th June 1931.—Babu Ramani Ranjan Biswas, who recently acted as a munsif of Khulna (Sadar), is appointed to act as a munsif in the district of the 24-Parganas, to be ordinarily stationed at Alipore, *vice* Babu Basanta Kumar Ray.

24-Parganas.—No. 4932J.—29th June 1931.—In exercise of the powers conferred by sections 14 and 15 of the Code of Criminal Procedure, 1898 (Act V of 1898), the Governor in Council is pleased—

(*a*) to confer upon Mr. J. R. Sword the powers of a Magistrate of the third class, in the district of the 24-Parganas, for a period of three years from the date of this notification, and

(*b*) to direct him to sit as a member of the Baranagar bench in the said district.

Dacca.—No. 5020J.—2nd July 1931.—In exercise of the powers conferred by sections 14 and 15 and the proviso to section 357 of the Code of Criminal Procedure, 1898 (Act V of 1898), the Governor in Council is pleased—

(*a*) to confer upon Khan Sahib Maulvi Muhammad Ishaq Khan Majlish the powers of a Magistrate of the second class, in the district of Dacca, for a period of three years from the 28th July 1931, in respect to such cases as may be made over to him within the limits of the Manikganj subdivision of the said district,

(*b*) to direct that he shall, in addition to sitting singly, sit as a member of the Manikganj bench in the said district, and

(*c*) to direct him to take down evidence in the English language.

Howrah.—No. 5022J.—2nd July 1931.—In exercise of the powers conferred by sections 14 and 15 and the proviso to section 357 of the Code of Criminal Procedure, 1898 (Act V of 1898), the Governor in Council is pleased—

(*a*) to confer upon Babu Ashutosh Mukharji the powers of a Magistrate of the second class, in the district of Howrah, for a period of three years from the 30th July 1931, in respect to such cases as may be made over to him within the limits of the Sadar subdivision of the said district,

(*b*) to direct that he shall, in addition to sitting singly, sit as a member of the Sadar bench in the said district, and

(*c*) to direct him to take down evidence in the English language.

Hooghly.—No. 5024J.—2nd July 1931.—In exercise of the powers conferred by sections 14 and 15 and the proviso to section 357 of the Code of Criminal Procedure, 1898 (Act V of 1898), the Governor in Council is pleased—

(*a*) to confer upon Babu Nirmal Chandra Ghosh the powers of a Magistrate of the second class, in the district of Hooghly, for a period of three years from the 24th July 1931, in respect to such cases as may be made over to him within the limits of the Serampore subdivision of the said district,

(*b*) to direct that he shall, in addition to sitting singly, sit as a member of the Serampore bench in the said district, and

(*c*) to direct him to take down evidence in the English language.

Resignation.

Mymensingh.—No. 4893J.—26th June 1931.—The Governor in Council is pleased to accept the resignation tendered by Babu Aswini Kumar Ray of his office as an Honorary Magistrate of the Sadar bench in the district of Mymensingh.

Powers.

Faridpur.—No. 4895J.—26th June 1931.—In exercise of the power conferred by sub-section (*1*) of section 388 of the Indian Succession Act, 1925 (XXXIX of 1925), the Governor in Council is pleased to invest Babu Naresh Chandra Chakrabatti, No. I, munsif, under orders of transfer to Bhanga, in the district of Faridpur, with the functions of a District Judge within the local limits of the Bhanga munsifi.

NOTIFICATIONS

Nadia.—No. 4993J.—2nd July 1931.—In exercise of the power conferred by section 65 of the Bengal Village Self-Government Act, 1919 (Bengal Act V of 1919), the Governor in Council is pleased to appoint Babu Upendra Nath Bhattacharji, a member of the Amjhupi union board within the Meherpur police-station in the Meherpur subdivision of the Nadia district, to be, during his term of office as such member, a member of the union bench within the jurisdiction of the said union board for the purposes of that section, *vice* Babu Narendra Gopal Biswas, resigned.

Nadia.—No. 4994J.—2nd July 1931.—In exercise of the power conferred by section 73 of the Bengal Village Self-Government Act, 1919 (Bengal Act V of 1919), the Governor in Council is pleased to appoint Babu Upendra Nath Bhattacharji, a member of the Amjhupi union board within the Meherpur police-station in the Meherpur subdivision of the Nadia district, to be, during his term of office as such member, a member of the union court within the jurisdiction of the said union board for the purposes of that section, *vice* Babu Narendra Gopal Biswas, resigned

Dacca.—No. 4996J.—2nd July 1931.—In exercise of the power conferred by section 65 of the Bengal Village Self-Government Act, 1919 (Bengal Act V of 1919), the Governor in Council is pleased to appoint the following members of the union boards mentioned below to be, during their term of office as such members, union benches within the jurisdiction of the union boards of which they are, respectively, members for the purposes of that section:—

Narayanganj subdivision, district Dacca.

Monohardi police-station.

Patuli union board.

Babu Upendra Chandra Ray.
Babu Annada Charan Chakrabatti.
Maulvi Muhammad Ali Newaj.
Maulvi Ainaddin.

Narsingdi police-station.

Narsingdi union board.

Babu Nripendra Kumar Ray.
Babu Pratap Chandra Das.
Munshi Iyasin Bepari.

Amdia union board.

Babu Angana Ranjan Chakrabatti.
Babu Kamakshya Prasad Sen.
Maulvi Shaheb Ali.

Shilmandi union board.

Babu Dinesh Kiron Pal.
Babu Durga Prasanna Chakrabatti.
Maulvi Muhammad Ansar Khan.

Raipura police-station.

Radhanagar union board.

Babu Srinath Ray.
Babu Surendra Chandra Das.
Maulvi Nasiruddin Mia.
Munshi Gazi Master.

Palashtali union board.

Babu Suresh Chandra Pal.
Babu Kula Chandra Chakrabatti.
Maulvi Alauddin Bhuiya.

Dacca.—No. 4997J.—2nd July 1931.—In exercise of the power conferred by section 73 of the Bengal Village Self-Government Act, 1919 (Bengal Act V of 1919), the Governor in Council is pleased to appoint the following members of the union boards mentioned below to be, during their term of office as such members, union courts within the jurisdiction of the union boards of which they are, respectively, members for the purposes of that section:—

Narayanganj subdivision, district Dacca.

Monohardi police-station.

Patuli union board.

Babu Upendra Chandra Ray.
Babu Annada Charan Chakrabatti.
Maulvi Muhammad Ali Newaj.
Maulvi Ainaddin.

Narsingdi police-station.

Narsingdi union board.

Babu Nripendra Kumar Ray.
Babu Pratap Chandra Das.
Munshi Iyasin Bepari.

Amdia union board.

Babu Angana Ranjan Chakrabatti.
Babu Kamakshya Prasad Sen
Maulvi Shaheb Ali.

Shilmandi union board.

Babu Dinesh Kiron Pal.
Babu Durga Prasanna Chakrabatti.
Maulvi Muhammad Ansar Khan.

Raipura police-station.

Radhanagar union board.

Babu Srinath Ray.
Babu Surendra Chandra Das.
Maulvi Nasiruddin Mia.
Munshi Gazi Master.

Palashtali union board.

Babu Suresh Chandra Pal.
Babu Kula Chandra Chakrabatti.
Maulvi Alauddin Bhuiya.

Bakarganj.—No. 5000J.—2nd July 1931.—In exercise of the power conferred by section 65 of the Bengal Village Self-Government Act, 1919 (Bengal Act V of 1919), the Governor in Council is pleased to appoint the following members of the union boards mentioned below to be, during their term of office as such members, union benches within the jurisdiction of the union boards of which they are, respectively, members for the purposes of that section:—

Sadar South subdivision, district Bakarganj.

Police-station Kotwali.

Saistabad union board.

Munshi Syed Abdul Aziz.
Babu Chinta Haran Banarji.
Munshi Syed Abdul Mannan Chaudhuri.

Police-station Bakarganj.

Dudhal union board.

Babu Jogesh Chandra Ray Chaudhuri.
Munshi Mahamad Hossain Gazi.
Munshi Muzaffar Ali Mallik.

Police-station Jhalakati.

Basanda union board.

Maulvi Golam Arpin Talukdar.
Babu Lalit Chandra Banarji.
Munshi Aminulla.

Gabha-Ramchandrapur union board.

Babu Jitendra Nath Chatarji.
Babu Birendra Nath Guha Chaudhuri.
Maulvi Syed Fazle Karim Khondaker.

Police-station Rajapur.

Rajapur union board.

Maulvi Mahasenuddin Ahmed.
Maulvi Hazi Huzzat Ali Mridha.
Babu Lal Mohan Sarkar.

Bakarganj.—No. 5001J.—2nd July 1931.—In exercise of the power conferred by section 73 of the Bengal Village Self-Government Act, 1919 (Bengal Act V of 1919), the Governor in Council is pleased to appoint the following members of the union boards mentioned below to be, during their term of office as such members, union courts within the jurisdiction of the union boards of which they are, respectively, members for the purposes of that section:—

Sadar South subdivision, district Bakarganj.

Police-station Kotwali.

Saistabad union board.

Munshi Syed Abdul Aziz.
Babu Chinta Haran Banarji.
Munshi Syed Abdul Mannan Chaudhuri.

Police-station Bakarganj.

Dudhal union board.

Babu Jogesh Chandra Ray Chaudhuri.
Munshi Mahamad Hossain Gazi.
Munshi Muzaffar Ali Mallik.

Police-station Jhalakati.

Basanda union board.

Maulvi Golam Arpin Talukdar.
Babu Lalit Chandra Banarji.
Munshi Aminulla.

Gabha-Ramchandrapur union board.

Babu Jitendra Nath Chatarji.
Babu Birendra Nath Guha Chaudhuri.
Maulvi Syed Fazle Karim Khondaker.

Police-station Rajapur.

Rajapur union board.

Maulvi Mahasenuddin Ahmed.
Maulvi Hazi Huzzat Ali Mridha.
Babu Lal Mohan Sarkar.

Dacca.—No. 5129J.—6th July 1931.—In exercise of the power conferred by section 65 of the Bengal Village Self-Government Act, 1919 (Bengal Act V of 1919), the Governor in Council is pleased to appoint the following members of the union boards mentioned below to be, during their term of office as such members, union benches within the jurisdiction of the union boards of which they are, respectively, members for the purposes of that section:—

Narayanganj subdivision, district Dacca.

Gopaldi police-station.

Uchitpura union board.

Babu Bharat Chandra Das.
Babu Umesh Chandra Chakrabatti.
Munshi Khalil-ur Rahaman Bhuiya.
Maulvi Muhammad Idris Bhuiya.

Rupganj police-station.

Nagari union board.

Mr. Francis Dons.
Babu Ramani Mohan Chaudhuri.
Maulvi Rukanuddin Ahammad.
Babu Hem Chandra Ghosh.

Bholabo union board.

Babu Chandra Kishore Pal.
Babu Mahendra Chandra Chakrabatti.
Munshi Fayezuddin Bhuiya.
Munshi Panchu Sarkar *alias* Munshi Abdul Goffur.

2. This notification will take effect from the date of the first meeting of the reconstituted union boards at which a quorum is present.

Dacca.—No. 5130J.—6th July 1931.—In exercise of the power conferred by section 73 of the Bengal Village Self-Government Act, 1919 (Bengal Act V of 1919), the Governor in Council is pleased to appoint the following members of the union boards mentioned below to be, during their term of office as such members, union courts within the jurisdiction of the union boards of which they are, respectively, members for the purposes of that section:—

Narayanganj subdivision, district Dacca.

Gopaldi police-station.

Uchitpura union board.

Babu Bharat Chandra Das.
Babu Umesh Chandra Chakrabatti.
Munshi Khalil-ur Rahaman Bhuiya.
Maulvi Muhammad Idris Bhuiya.

Rupganj police-station.

Nagari union board.

Mr. Francis Dons.
Babu Ramani Mohan Chaudhuri.
Maulvi Rukanuddin Ahammad.
Babu Hem Chandra Ghosh.

Bholabo union board.

Babu Chandra Kishore Pal.
Babu Mahendra Chandra Chakrabatti.
Munshi Fayezuddin Bhuiya.
Munshi Panchu Sarkar *alias* Munshi Abdul Goffur.

2. This notification will take effect from the date of the first meeting of the reconstituted union boards at which a quorum is present.

Faridpur.—No. 5132J.—6th July 1931.—In exercise of the power conferred by section 65 of the Bengal Village Self-Government Act, 1919 (Bengal Act V of 1919), the Governor in Council is pleased to appoint Munshi Danesh Ali Mandal, a member of the Khankhanapur union board within the Rajbari police-station in the Goalundo subdivision of the Faridpur district, to be, during his term of office as such member, a member of the union bench within the jurisdiction of the said union board for the purposes of that section.

Faridpur.—No. 5133J.—6th July 1931.—In exercise of the power conferred by section 73 of the Bengal Village Self-Government Act, 1919 (Bengal Act V of 1919), the Governor in Council is pleased to appoint Munshi Danesh Ali Mandal, a member of the Khankhanapur union board within the Rajbari police-station in the Goalundo subdivision of the Faridpur district, to be, during his term of office as such member, a member of the union court within the jurisdiction of the said union board for the purposes of that section.

Mymensingh.—No. 5135J.—6th July 1931.—In exercise of the power conferred by section 65 of the Bengal Village Self-Government Act, 1919 (Bengal Act V of 1919), the Governor in Council is pleased to appoint Munshi Muhammad Jahur Box and Babu Hriday Chandra Das Gupta, members of the Achmita-Charipara union board within the Katiadi police-station in the Kishoreganj subdivision of the Mymensingh district, to be, during their term of office as such members, members of the union bench within the jurisdiction of the said union board for the purposes of that section.

Mymensingh.—No. 5136J.—6th July 1931.—In exercise of the power conferred by section 73 of the Bengal Village Self-Government Act, 1919 (Bengal Act V of 1919), the Governor in Council is pleased to appoint Munshi Muhammad Jahur Box and Babu Hriday Chandra Das Gupta, members of the Achmita-Charipara union board within the Katiadi police-station in the Kishoreganj subdivision of the Mymensingh district, to be, during their term of office as such members, members of the union court within the jurisdiction of the said union board for the purposes of that section.

J. W. NELSON,
Secy. to the Govt. of Bengal.

LOCAL SELF-GOVERNMENT DEPARTMENT.

NOTIFICATIONS.

Minister-in-charge: The Hon'ble Mr. Bijoy Prasad Singh Roy.

24-Parganas.—No. 2493M. — 29th June 1931.—In exercise of the power conferred by section 23 (*1*) of the Bengal Municipal Act, 1884 (Bengal Act III of 1884), the Government of Bengal (Ministry of Local Self-Government) are pleased to appoint Mr. W. T. MacEwan to be Chairman of the Garulia Municipality in the district of the 24-Parganas.

Calcutta.—No. 2495M.—29th June 1931.—In exercise of the power conferred by clause (*1*) of section 137 of the Calcutta Improvement Act, 1911 (Bengal Act V of 1911), the Government of Bengal (Ministry of Local Self-Government) are pleased to make the following amendment in the rules published under notification No. 1724M., dated the 20th December 1911, for the election, under sub-section (*1*) of section 7 of the said Act, of three members of the Corporation of Calcutta to be members of the Board of Trustees for the Improvement of Calcutta:—

Amendment.

Insert the following as rule 5A:—

5A. The quorum necessary to transact business at the meetings referred to in rule 5 shall be as follows, namely—

(*a*) twenty members for every meeting held for the purpose of election by the Corporation,

(*b*) fourteen Councillors for every meeting held for the purpose of election by the Councillors referred to in section 7 (*1*)(*b*), and

(*c*) five Councillors for every meeting held for the purpose of an election jointly by the Councillors referred to in section 7 (*1*) (*c*).

Provided that if at a meeting a quorum is not present, the meeting shall stand adjourned to some future day to be appointed by the Mayor or in his absence the Deputy Mayor and three days' notice of such adjourned meeting shall be given. The quorum for such adjourned meeting shall be as follows, namely—

(*1*) fifteen members for a meeting under clause (*a*) above,

(*2*) ten Councillors for a meeting under clause (*b*) above, and

(*3*) four Councillors for a meeting under clause (*c*) above.

Nadia.—No. 2513M.—30th June 1931.—In exercise of the power conferred by clause (*a*) of section 59 of the Bengal Municipal Act, 1884 (Bengal Act III of 1884), the Government of Bengal (Ministry of Local Self-Government) are pleased to approve the resolution passed by the Commissioners of the Santipur Municipality in the district of Nadia under section 23 of that Act, electing Babu Sachinath Pramanik, B.A., M.B., to be Chairman of that Municipality.

24-Parganas.—No. 2515M. — 30th June 1931.—The following proposed plan for lighting a portion of the Dum Dum Municipality, in the district of the 24-Parganas, with electricity, which has been submitted by the Commissioners of that Municipality to the Government of Bengal (Ministry of Local Self-Government) for sanction under section 308, read with section 319 of the Bengal Municipal Act, 1884 (Bengal Act III of 1884), is published for the information of persons likely to be affected thereby.

2. The proposed plan will be taken into consideration on the 27th August 1931, and any objection or suggestion which may be received by the undersigned through the District Magistrate before that date will be duly considered:—

Plan.

(1) The portion of roads and lanes of the Dum Dum Municipality which it is proposed to light with electricity is given below:—

A. Circle 1.

(*a*) The Mall Road.
(*b*) Jessore Road.

B. Circle 2.

(*a*) Digla Road.
(*b*) Post Office Road.
(*c*) Church Road.
(*d*) Reservoir Road.

C. Circles 3 and 4.

(*a*) South Street.
(*b*) Todd Road.
(*c*) Chamarpara Road.
(*d*) Motia Mohulla Road.
(*e*) Station Road.

(2) One hundred and thirty-three electric lamps will be installed as shown in the accompanying statement. The Commissioners have decided to enter into an agreement with the Calcutta Electric Supply Corporation, Limited, for the installation of these lamps

and for their maintenance at the annual rate of Rs. 25-13-9 for each lamp of 40 watts, or at a total cost of Rs. 3,440 per annum. The Commissioners at a meeting propose to meet the charge to be incurred on account of lighting by levying a lighting rate of 2½ per cent. on the annual value of holdings situated within a zone of 250 feet from the nearest electric light post on the roads defined above. The income to be derived from the lighting tax from the aforesaid area is estimated to be Rs. 5,257 per year, and the total expenditure including charges for collection, etc., will be Rs. 3,752.

Statement showing the number of lights to be lighted in each road and lane of the Dum Dum Municipality.

Name of portion of the road or lane to be lighted.		Number of lamps to be lighted.
A. Circle 1.		
(*a*) The Mall Road	...	40
(*b*) Jessore Road	...	15
B. Circle 2.		
(*a*) Digla Road.	...	9
(*b*) Post Office Road	...	4
(*c*) Church Road	...	16
(*d*) Reservoir Road	...	6
C. Circles 3 and 4.		
(*a*) South Street	...	8
(*b*) Todd Road	...	16
(*c*) Chamarpara Road	...	2
(*d*) Motia Mohulla Road	...	3
(*e*) Station Road	...	14
		133

24-Parganas.—No. 2517M. — 30th June 1931.—The following proposed plan for lighting a portion of the Baranagar Municipality, in the district of the 24-Parganas, with electricity, which has been submitted by the Commissioners of that Municipality to the Government of Bengal (Ministry of Local Self-Government) for sanction under section 308, read with section 319 of the Bengal Municipal Act, 1884 (Bengal Act III of 1884), is published for the information of persons likely to be affected thereby.

2. The proposed plan will be taken into consideration on the 27th August 1931, and any objection or suggestion which may be received by the undersigned through the District Magistrate before that date will be duly considered:—

Plan.

(1) The portion of the Baranagar Municipality which it is proposed to be lighted with electricity is defined below:—

North—The Dantia Khal otherwise called the Bagjala Cut.

East—The eastern boundary line of the Municipality.

South—Kalicharan Ghose Road from the Barrackpore Trunk Road up to the eastern end of the culvert under the Eastern Bengal Railway line.

West—The Barrackpore Trunk Road.

(2) Eighty-one electric lamps will be installed as shown in the statement given below. The Commissioners have decided that the lamps installed will be of 40 watt power, and that under the terms of clause 5 (*1*) (*b*) of the Schedule at the end of the Indian Electricity Act and those of the existing contract for ten years from 1st April 1927 entered into with the Calcutta Electric Supply Corporation, Ltd., on 22nd November 1926, as varied by conditions subsequently agreed upon as stated in letter No. 13134, dated the 4th April 1930, of the said Calcutta Electric Supply Corporation, Ltd., and approved by the Municipal Commissioners at a meeting held on 20th April 1930, these lamps will be installed and maintained by the said Calcutta Electric Supply Corporation, Ltd., up to the terms of their contract at the annual rate of Rs. 30-14-8 for each 40 watt lamp burning 3,650 hours, or at a total cost of Rs. 2,506 per annum.

The Municipal Commissioners propose to meet the charge to be incurred on account of lighting the aforesaid area by imposing an annual lighting rate of 3 per cent. on the annual value of holdings situated within the area to be lighted as defined in paragraph 1 of the plan. The income to be derived from the lighting rate from the aforesaid area is estimated to be about Rs. 2,600.

Statement showing the number of lights to be lighted at present in each of the roads within the area.

Name of road.		Number of lights of 40 watt power.
(1) Bamanpara Lane, Palpara		8
(2) Nawapara Road	...	34
(3) Mannapara Road	...	6
(4) Mondalpara Lane	...	16
(5) Ramkali Mukherji Lane	...	4
(6) Attapara Lane	...	13
Total	...	81

Mymensingh.—No. 2540M. — 2nd July 1931. In exercise of the power conferred by section 14 of the Bengal Municipal Act, 1884 (Bengal Act III of 1884), the Government of Bengal (Ministry of Local Self-Government) are pleased to appoint the following gentlemen to be Commissioners of the Tangail Municipality in the district of Mymensingh:—

Maulvi Khundkar Abu Muhammad Fazlul Karim.

Maulvi Abdus Salam.

Maulvi Nur Rahman Khan Eusufji, M.L.C.

Babu Madhab Lal Choudhury.

Babu Kulada Prasad Neogi, B.L.

Nadia.—No. 2542M.—2nd July 1931.—In exercise of the power conferred by section 14 of the Bengal Municipal Act, 1884 (Bengal Act III of 1884), the Government of Bengal (Ministry of Local Self-Government) are pleased to appoint the following gentlemen to be Commissioners of the Meherpur Municipality in the district of Nadia:—

The Sub-Registrar, Meherpur (*ex-officio*).

Dewan Abdul Aziz Khondkar.

Maulvi Abdul Kader Siddique.

Hooghly. — No. 2553M. — 3rd July 1931.—In exercise of the power conferred by clause (*a*) of section 59 of the Bengal Municipal Act, 1884 (Bengal Act III of 1884), the Government of Bengal (Ministry of Local Self-Government) are pleased to approve the resolution passed by the Commissioners of the Champdany Municipality in the district of Hooghly under section 23 of that Act, electing Dr. F. H. B. Norrie, M.D., CH.M., F.R.C.S. (E.), O.B.E., to be their Chairman.

Medical.

Minister-in-charge: The Hon'ble Mr. Bijoy Prasad Singh Roy.

Calcutta.—No. 291T.Medl. — 25th June 1931.—Major S. N. Mukharji, I.M.S., was placed on supernumerary duty at the Medical College Hospitals, Calcutta, with effect from the 17th June 1931.

Dacca. No. 1994Medl.—29th June 1931.—First Class Military Assistant Surgeon E. R. Hill, I.M.D., is appointed as Deputy Superintendent, Mitford Hospital, Dacca, with effect from the 4th April 1931.

No. 288T.Medl.—25th June 1931.—Lt.-Col. T. L. Bomford, I.M.S., is granted leave on half average pay for sixteen months, under Fundamental Rule 81 (*d*), in extension of the leave for one year granted to him in notification No. 3170Medl., dated the 22nd November 1930.

Mymensingh-Dacca. — No. 293T.Medl. — 25th June 1931. — Sub-Assistant Surgeon Dr. Narendra Kishore Roy, Deputy Superintendent and Teacher of Anatomy, Lytton Medical School, Mymensingh, is appointed temporarily to the Bengal Medical Service (Upper) and is appointed as Teacher of Anatomy, Dacca Medical School, with effect from the date of his taking over charge of this post.

Calcutta.—No. 1990Medl.—29th June 1931. —Temporary Civil Assistant Surgeon Dr. Manindra Priya Talukdar is appointed to do supernumerary duty at the Medical College Hospitals, Calcutta, with effect from the 12th June 1931.

Calcutta.—No. 2018Medl.—3rd July 1931. —Major S. N. Mukherji, F.R.C.S.E., I.M.S., on supernumerary duty at the Medical College Hospitals, Calcutta, is appointed as Superintendent of the Campbell Medical School and Hospital, Calcutta, *vice* Lt.-Col. K. K. Chatterjee, F.R.C.S.I., I.T.F.

Rajshahi.—No. 2031Medl.—3rd July 1931. —Assistant Surgeon Dr. Ashutosh Ghosh, Medical Officer, College Hostels, Rajshahi, was granted leave on average pay, under Fundamental Rule 81 (*b*) (*ii*), for thirty-two days, with effect from the 26th May 1931.

Calcutta.—No. 2033Medl.—3rd July 1931. —On return from leave Assistant Surgeon Dr. Wahiduddin Mahmud is placed on supernumerary duty at the Presidency General Hospital, Calcutta, with effect from the 1st June 1931.

Calcutta.—No. 2036Medl.—3rd July 1931. —Assistant Surgeon Dr. Muhammad Bazlur Rahman, officiating Assistant Port Health Officer, Calcutta, is granted leave on average pay for one month, under Fundamental Rule 81 (*b*) (*ii*), with effect from the 1st June 1931, or date of relief.

Calcutta.—No. 2037Medl.—3rd July 1931. —Temporary Assistant Surgeon Dr. Ali Ahmad, officiating House Surgeon, Presidency General Hospital, Calcutta, is appointed to act as 4th Assistant Port Health Officer, Calcutta, *vice* Dr. Muhammad Bazlur Rahman.

Public Health.

NOTIFICATION.

Minister-in-charge: The Hon'ble Mr. Bijoy Prasad Singh Roy.

Chittagong.—No. 1612P.H.—4th July 1931.—In pursuance of section 50, sub-section (2) of the Indian Ports Act, 1908, the following abstract account of receipts and expenditure of the Hospital Port Dues Fund, Chittagong, for the year 1930-31, is published for general information. It forms a supplement to the abstract account of receipts and expenditure of the Chittagong Port Fund for the year 1930-31, published at pages 638-40, Part II of the *Calcutta Gazette*, dated the 2nd July 1931:—

Abstract Account of the receipts and Expenditure on account of the Chittagong Hospital Port Dues Fund, during the year 1930-31.

RECEIPTS.	Amount. Rs. A. P.
Balance on the 1st April 1930 ..	14,465 14 2
Hospital Port Dues collection	5,143 7 0
Interest on deposits in the Bank ..	281 0 0
Contribution made by the Port Commissioners, Chittagong, as half the estimated expenditure of the Hospital Port Dues Fund, Chittagong, for the year 1930-31	4,560 4 0
Contribution made by the Government of India, as half the estimated expenditure of the Hospital Port Dues Fund, Chittagong, for the year 1930-31 ..	4,560 4 0
Total ..	14,544 15 0
GRAND TOTAL ..	29,010 13 2

EXPENDITURE.	Amount. Rs. A. P.	Total. Rs. A. P.
(1) *Hospital Charges.*		
(a) Contribution towards the maintenance of the Chittagong General Hospital	3,000 0 0	
(b) Contribution for cholera and other infectious diseases establishment maintained at the Chittagong General Hospital	240 0 0	3,240 0 0
(2) *Maintenance.*		
Pay and allowances of the Port Health Officer ..	5,563 6 0	
Health Officer's Office Establishment	516 0 0	
Health Officer's Boat Establishment	1,019 9 0	
Pay of dooly bearer ..	188 10 0	
Contingencies	536 8 4	
Telephone charges ..	235 0 0	
Petty construction and repairs	94 0 0	
Bacteriological appliances ..	200 0 0	
Fees for inspection of vessels	777 9 0	
Disinfection establishment, leave and travelling allowances, fees of Additional Health Officer, and other unforeseen charges ..	40 0 0	
Annual subsidy to the Port Commissioners, Chittagong	300 0 0	9,470 10 4
Total ..		12,710 10 4
Balance on 1st March 1931 ..	....	16,300 2 10
GRAND TOTAL. ..		29,010 13 2

C. W. GURNER,
Secy. to the Govt. of Bengal.

EDUCATION DEPARTMENT.

NOTIFICATIONS.

No. 735T.Edn.—26th June 1931.—In exercise of the powers conferred by section 6, sub-section (*1*), clause (*c*), and section 10 of the Indian Universities Act, 1904 (VIII of 1904), as amended by the Calcutta University Act, 1921 (VII of 1921), His Excellency the Chancellor of the Calcutta University is pleased to nominate Kumar Pramathesh Chandra Barua, M.L.C., Assam, to be an Ordinary Fellow of the University, with effect from the 5th August 1931, *vice* Rai Bahadur Sadananda Dowera.

Darjeeling.—No. 1772Edn.—6th July 1931.—Mr. C. A. Price, Middle School Master, Victoria Boys' School, Kurseong; has been granted by the High Commissioner for India leave without pay for one month, in extension of the leave already granted to him.

Dacca.—No. 1708Edn.—30th June 1931.—In pursuance of section 10 (2) of the Dacca University Act, 1920 (XVIII of 1920), His Excellency the Chancellor is pleased to appoint Dr. W. A. Jenkins of the Indian Educational Service to act as Vice-Chancellor of Dacca University with effect from the 6th July 1931, or any subsequent date on which he joins the appointment, during the absence, on leave, of Mr. G. H. Langley, or until further orders.

24-Parganas. — No. 1732Edn. — 3rd July 1931.—Dr. Jyotish Govinda Sen, officiating District Inspector of Schools, 24-Parganas, acted on his own pay in the Bengal Educational Service as Superintendent, Reformatory and Industrial Schools, Alipore, for the period from the 29th to the 31st May 1931, both days inclusive, in addition to his own duties, *vice* Mr. W. F. B. Beale, transferred.

Bakarganj-24-Parganas. — No. 1733Edn.—3rd July 1931.—Mr. Jyotish Chandra Lahiri, Superintendent, Government Technical School, Barisal, is appointed to act, until further orders, as Superintendent, Reformatory and Industrial Schools, Alipore, with effect from the 1st June 1931, *vice* Mr. W. F. B. Beale, transferred.

Minister-in-charge: The Hon'ble Mr. K. Nazim-ud-Din, C.I.E.

Birbhum.—No. 1760Edn.—4th July 1931.—WHEREAS the Right Honourable Satyendra Prasanna Baron Sinha of Raipur by his will directed his executors and trustees to make over the sum of rupees fifty thousand to his eldest son Aroon Kumar Sinha, now the Right Honourable Aroon Kumar Baron Sinha of Raipur, and nephew Charu Chandra Sinha as trustees for the Sitikantha Memorial English School and the Monmohini Charitable Dispensary at Raipur in district Birbhum with all powers and full and absolute discretion to them to apply the income of the said sum invested in Government securitits in such proportion as they thought fit between the two institutions and also if possible to make over the management of the said institutions together with the said fund to the Local Government of Bengal or

to the District Board of Birbhum or to any other local authority under such terms and conditions as they the said trustees and the said authority might agree upon;

AND WHEREAS the said trustees have for the above purpose transferred to the Treasurer of Charitable Endowments, Bengal, the cash and securities particulars whereof are set out in the First Part of the First Schedule hereunder written;

AND WHEREAS the said school and dispensary buildings and the land and immoveable properties enjoyed therewith are described in the Second Part of the First Schedule;

IT IS HEREBY NOTIFIED that the Government of Bengal in exercise of the powers conferred by sections 4 and 5 of the Charitable Endowment Act, 1890, and upon the application and with the concurrence of the said Aroon Kumar Baron Sinha of Raipur and the said Charu Chandra Sinha *do hereby order and direct* that the cash and securities the particulars of which are contained in the First Part of the First Schedule hereunder written and the immoveable properties which are specified in the Second Part of the First Schedule shall as from the publication of this notification vest and be thenceforth vested in the Treasurer of Charitable Endowments for the territories subject to the Government of Bengal to be held by him and his successors (subject to the provisions of the Charitable Endowment Act, 1890, and the rules from time to time to be framed thereunder by the Governor General in Council) upon trust to hold the said immoveable properties in accordance with the trusts set out in the scheme set forth in the Second Schedule hereunder written and to receive the interests of the said securities when and as the same shall become due and payable and from time to time to apply the same in terms of the said scheme for the maintenance of the said Sitikantha Memorial English School and the said Monmohini Charitable Dispensary;

AND IT IS HEREBY FURTHER NOTIFIED that the said scheme shall come into operation on the vesting of the said immoveable properties and securities mentioned in the First and Second Parts of the First Schedule above referred to in the Treasurer of Charitable Endowments.

The First Schedule above referred to.

PART I.

Particulars of Securities.

Rs. 52,900 Government of India 5 per cent. Loan 1939-44.

	Rs.	a.	p.
Cash balance			
Being the balance in hand after purchase of the above stock ...	3	9	8
Together with the unpaid interest on the said stock up to the date of purchase and included in the purchase price ...	498	3	4
	501	13	0

PART II.

Description of the land.

Boundary of the land on which the School Building stands.

All that plot of rent-free land situated in mauza Raipur, thana and chowki Bolpur, Sub-Registration office Bolpur, in the district of Birbhum, and recorded as plot No. 1005 in khatian No. 432 in the survey and settlement records prepared under the authority of the Government of Bengal in 1925-29; with all structures and buildings constructed thereon and tank and well included therein and bounded on the north by plot No. 564 used as playground and on the west by public road and on the south by plot No. 1009 and on the east by plots Nos. 1006, 1007 and 1008 which are chowkidari chakran lands and by plot No. 637 consisting of cultivated land containing an area of 2·08 acres, more or less, used for and known as Raipur Sitikantha Memorial School.

It should be noted that the ashes of the late Lord Sinha are interred in a place within the above area and it is proposed to inter the ashes of Colonel N. P. Sinha and his nephew late M. Sinha and the Government will have no power to interfere with the same except to keep the structures on the same which are at present there or which may be built afterwards in a clean condition. It is proposed to erect a small sort of "Kiosk" on the ground where the ashes are interred.

Boundary of the land under the Dispensary:

All those two plots of rent-free lands situated in mauza Raipur, thana and chowki Bolpur, Sub-Registration office Bolpur, in the district of Birbhum, and recorded as plots Nos. 1263 and 1264 khatian No 430 in the survey and settlement records prepared under the authority of the Government of Bengal in 1925-29, with all structures and buildings constructed thereon and bounded on all sides, north, west, south and east, by village roads within the said village of Raipur containing area of 0·08 acre, more or less, used for and konwn as Raipur Monmohini Charitable Dispensary.

The Second Schedule above referred to.

1. This Endowment shall be called the "Satyendra Prasanna Baron Sinha Memorial Endowment."

2. The object of this Endowment shall be the maintenance of the Sitikantha Memorial English School and the Monmohini Charitable Dispensary in the village of Raipur.

3. The Administrator of the Endowment shall be the District Magistrate of Birbhum for the time being.

4. The income of the Fund shall be paid by the Treasurer of Charitable Endowments to the Administrator and distributed by the Administrator as hereinafter set out.

5. The Committee of Management of the said school shall consist of not more than five nor less than four members.

The members of such Committee shall be—

(1) The nominee of the Administrator.

(2) One guardian of the pupils to be appointed by the Administrator.

(3) The Head Master for the time being.

(4) and (5) Two persons to be nominated by the Baron Sinha of Raipur for the time being.

6. The Committee of Management of the said dispensary shall consist of not more than five nor less than four members.

The members of such Committee shall be—

(1) The Baron Sinha of Raipur for the time being.

(2) A member of the family of the Baron Sinha of Raipur for the time being, such member to be nominated by the Baron Sinha of Raipur for the time being.

(3) The Secretary of the dispensary for the time being.

(4) A member to be nominated by the head of the Santi-Niketan, Bolepur.

(5) A member to be elected by the Local Union Board.

7. The said respective Committees shall manage the school and dispensary, respectively, and shall, respectively, have power to remove any person holding any office or servant employed in the said institutions and another to appoint to fill any vacancy.

Provided that a majority of the respective Committees shall have power to remove the Head Master for the time being or the Secretary for the time being.

8. The Administrator shall distribute to each of the said Committees 12/25ths of the total annual income received by him from the Treasurer of Charitable Endowments and shall distribute the remaining 1/25th between the said Committees in such proportions as having regard to the requirements for repairs of the respective buildings he shall think fit. Such last distributions to be used by the respective Committees for the repairs and maintenance of the buildings in their respective charge.

9. The scale of expenditure at the school and dispensary shall be within the available resources thereof respectively.

10. The scale of expenditure at the school shall be subject to the approval of the Inspector of Schools, the appointments of the staff shall be subject to a like approval and the school shall be liable to inspection by the officers of the Education Department of the Government of Bengal.

11. The school shall be conducted as a Middle English School and the syllabus of the Education Department shall be followed.

12. The dispensary shall be conducted as a Class V Dispensary under the supervision of the Government of Bengal and shall be liable to be inspected by the Civil Surgeon of the district and by other officers of the Government.

13. The Committee of the dispensary shall decide the manner in which the income shall be expended.

Chittagong.—No. 719T.Edn.—24th June 1931.—Babu Hirendra Lal Sen Gupta, Lecturer in Pali, Chittagong College, is appointed to act in the Bengal Educational Service as Professor of Pali at that college, with effect from the 6th July 1931, or any subsequent date on which he assumes charge of the duties of the post, *vice* Babu Mahima Ranjan Barua, on leave, or until further orders.

Calcutta.—No. 1746Edn.—3rd July 1931.—Babu Umesh Chandra Bhattacharji, Professor of Philosophy, Bethune College, Calcutta, is appointed to act on his own pay in the Bengal Educational Service as Professor of that subject at the Presidency College, with effect from the date on which he may be relieved, against the Indian Educational Service post now vacant consequent on the deputation of Dr. Surendra Nath Das Gupta, or until further orders.

Dacca - Howrah.—No. 1755Edn.—4th July 1931.—Mr. C. J. Henderson, Principal, Ahsanullah School of Engineering, Dacca, now officiating Principal, Bengal Engineering College, is allowed leave on average pay for twelve days, under rule 81 (*b*) (*i*) of the Fundamental Rules, and in continuation leave on half average pay for one year, eight months and sixteen days, under rule 81 (*d*) of those rules, with effect from the 6th August 1931, or any subsequent date on which he may be relieved.

Registration.

NOTIFICATIONS.

Minister-in-charge: The Hon'ble Mr. K. Nazim-ud-Din, C.I.E.

Burdwan.—No. 545Regn.—27th June 1931.—In exercise of the power conferred by section 3 of the Bengal Muhammadan Marriages and Divorces Registration Act, 1876 (Bengal Act I of 1876), the Government of Bengal (Ministry of Education) are pleased to appoint Maulvi Choudhury Abdur Rahman temporarily to be a Muhammadan Registrar within the police-station of Monteswar, in the district of Burdwan, during the absence, on leave, of Maulvi Abdur Rashid, or until further orders.

Burdwan.—No. 546Regn.—27th June 1931.—In exercise of the power conferred by section 2 of the Kazis' Act, 1880 (Act XII of 1880), the Government of Bengal (Ministry of Education) are pleased to appoint Maulvi Choudhury Abdur Rahman temporarily to be the Kazi for the celebration of marriages and the performance of other rites and ceremonies within the police-station of Monteswar, in the district of Burdwan, during the absence, on leave, of Maulvi Abdur Rashid, or until further orders.

Faridpur.—No. 553Regn.—3rd July 1931. Babu Nibaran Chandra Sen, Sadar Sub-Registrar of Faridpur, was allowed leave on average pay for sixteen days, with effect from the 19th May 1931, under rule 81 (*b*) (*ii*) of the Fundamental Rules.

Khulna.—No. 555Regn.—4th July 1931.—Babu Kamakhya Kumar Banarji, Sub-Registrar, is appointed to act as Sadar Sub-Registrar of Khulna, with effect from the date on which he joins the appointment.

Khulna.—No. 556Regn.—4th July 1931.—Babu Rakhal Chandra Banarji, Sadar Joint Sub-Registrar of Khulna, is appointed to act, in addition to his own duties, as Sadar Sub-Registrar of that place, with effect from the 22nd June 1931, till the date of his relief by Babu Kamakhya Kumar Banarji.

No. 559Regn.—6th July 1931.—Maulvi Mutazil-ur-Rahman, Sadar Sub-Registrar, was allowed leave on half average pay for one month, under rule 81 (*d*) of the Fundamental Rules, in extension of the leave already granted to him.

Pabna.—No. 563Regn.—6th July 1931.—In exercise of the power conferred by section 3 of the Bengal Muhammadan Marriages and Divorces Registration Act, 1876 (Bengal Act I of 1876), the Government of Bengal (Ministry of Education) are pleased to appoint Maulvi Saiyid Abu Yusuf Ahmad to be a Muhammadan Registrar within the police-station of Raiganj, in the district of Pabna.

Pabna.—No. 564Regn.—6th July 1931.—In exercise of the power conferred by section 2 of the Kazis' Act, 1880 (Act XII of 1880), the Government of Bengal (Ministry of Education) are pleased to appoint Maulvi Saiyid Abu Yusuf Ahmad to be the Kazi for the celebration of marriages and the performance of other rites and ceremonies within the police-station of Raiganj, in the district of Pabna.

Pabna.—No. 567Regn.—6th July 1931.—In exercise of the power conferred by section 3 of the Bengal Muhammadan Marriages and Divorces Registration Act, 1876 (Bengal Act I of 1876), the Government of Bengal (Ministry of Education) are pleased to appoint Maulvi Serajul Haq to be a Muhammadan Registrar, within the police-station of Shahzadpur, in the district of Pabna.

Pabna.—No. 568Regn.—6th July 1931.—In exercise of the power conferred by section 2 of the Kazis' Act, 1880 (Act XII of 1880), the Government of Bengal (Ministry of Education) are pleased to appoint Maulvi Serajul Haq to be the Kazi for the celebration of marriages and the performance of other rites and ceremonies within the police-station of Shahzadpur, in the district of Pabna.

A. J. DASH,
Secy. to the Govt. of Bengal.

Orders by the Director of Public Instruction, Bengal.

BENGAL EDUCATIONAL SERVICE.

Dacca Divn.—No. 19B.—23rd June 1931.—Khan Sahib Maulvi Shamsuddin Ahmed, Assistant Inspector of Schools for Muhammadan Education, Dacca Division, in the Bengal Educational Service, is declared, in terms of rule 81 (*b*) (*ii*) of the Fundamental Rules, to have been on leave on average pay for the period from 3rd February 1931 to 30th May 1931.

2. He was permitted to affix to his leave Sunday, the 31st May 1931.

3. This cancels this office notification No. 1B., dated 3rd January 1931, granting Khan Sahib Maulvi Shamsuddin Ahmed leave for four months from 2nd February 1931.

Rajshahi.—No. 20B.—25th June 1931.—Maulvi Abdur Rahman Khan, District Inspector of Schools, Rajshahi, in the Bengal Educational Service, is declared, in terms of rule 81 (*b*) (*ii*) of the Fundamental Rules, to have been on leave on average pay for the period from 7th April 1931 to 20th June 1931.

2. He is permitted to affix to his leave Sunday, the 21st June 1931.

3. This cancels this office notification No. 7B., dated 3rd March 1931, granting Maulvi Abdur Rahman Khan leave for two months from 5th March 1931.

Hooghly.—No. 21B.—26th June 1931.—Babu Purna Chandra Bhattacharji, Professor of Physics and officiating Vice-Principal, Hooghly College, in the Bengal Educational Service, is granted, under articles 272 and 274 of the Civil Service Regulations, privilege leave on full pay for the period from 14th July 1931 to 10th October 1931.

2. He is permitted to affix to his leave the Puja vacation of the Hooghly College for 1931, extending from 11th October 1931 to 11th November 1931.

J. M. BOTTOMLEY,
Director of Public Instrn., Bengal (offg.).

Orders by the Inspector-General of Registration, Bengal.

Midnapore.—No. 440.—2nd July 1931.—Babu Gobinda Charan Samanta, Sub-Registrar of Sabong in the district of Midnapore, is allowed leave on average pay for two months, under rule 81 (*b*) (*ii*) of the Fundamental Rules, with effect from the 1st July 1931, or from any subsequent date on which he may be relieved.

Bankura-Midnapore.—No. 441.—2nd July 1931.—Babu Gauri Sankar Mukharji, Probationary Sub-Registrar of Bankura, is appointed to act as Sub-Registrar of Sabong, in the district of Midnapore, with effect from the date he joins the appointment.

Bogra-Jessore.—No. 442.—2nd July 1931.—Maulvi Ahmad Ali, Sub-Registrar of Shibganj, in the district of Bogra, on leave, is appointed to be Sub-Registrar of Sripur, in the district of Jessore.

Jessore-Hooghly.—No. 443. — 2nd July 1931.—This department notification No. 251, dated the 24th April 1931, appointing Babu Girindra Nath Ray, Sub-Registrar of Arambagh, Hooghly, as Sub-Registrar of Sripur, Jessore, is cancelled.

S. AHMED,

Inspector-General of Regn., Bengal.

FINANCE DEPARTMENT.

Audit.

CALCUTTA, THE 2ND JULY 1931.

RESOLUTION—No. 2671-F.

The Government of India having declared that the rate of interest on deposits and also on balances at the credit of subscribers to the General Provident and other similar funds on the 31st March 1931, as determined by the approved method, should be 5 per cent. during the financial year beginning on the 1st April 1931, the Government of Bengal have decided, in continuation of their resolution No. 48F., dated the 7th January 1931, that the rate of interest on deposits in the special provident funds on bonus or contributory terms and other provident funds under their administrative control should be 5 per cent., with effect from the 1st April 1931. This rate will apply to deposits and also to the balances at the credit of subscribers on the 31st March 1931. The funds concerned are—

(1) Provident fund for the copyists and typists of the Revenue, Civil and Criminal courts in Bengal.

(2) Provident fund of Revenue station officers in the Sunderbans Forest Division.

(3) Special provident funds on bonus or contributory terms.

Ordered that the resolution be forwarded to the several departments of the Government of Bengal and be published in the *Calcutta Gazette*.

By order of the Governor in Council,

E. N. BLANDY,

Secy. to the Govt. of Bengal.

ADDENDA AND CORRIGENDA.

No. 2714 F.—4th July 1931.—The following corrections, which have been authorised, are published for general information:—

Bengal Financial Rules, 1st Edition (Reprint), 1930.

Page 13—Rule 9(a).—*Insert* the following as a new clause under this rule:—

"(9) Sealed boxes containing Government promissory notes and other valuables belonging to Cantonment authorities."

Page 377—T. O. Form No. 3.—*For* the words "receipts have been taken in acquittance rolls" in lines 9 and 10 of the certificate No. 1, *substitute* "acquittances have been taken and."

Page 377—T. O. Form No. 3.—*For* certificate No. 6 *substitute* the following:—

"Certified that during the period for which house rent has been claimed no rent-free Government quarters were allotted to or were occupied by any person for whom house rent allowance has been drawn in this bill."

Page 157—T. O. 27 (a)—S. R. 123.—*Substitute* the following for the words "and has had the acquittance roll signed..... ...a stamp" occurring in lines 3-4 of this S. R.:—

" and obtained his receipt duly stamped where necessary on the office copy of the pay bill. If in any case, owing to the large size of an establishment or because certain of its men are working in out-stations, it is not found feasible or convenient to obtain the receipts of payees on the office copy of the pay bill the head of the office concerned may, at his discretion, maintain a separate acquittance roll in Bengal form No. 2413."

E. N. BLANDY,

Secy. to the Govt. of Bengal.

Miscellaneous.

NOTIFICATION.

No. 3672Mis.—3rd July 1931.—With reference to rules 7 and 8 of the rules published with this department notification No. 1441 Mis., dated the 5th April 1929, it is hereby notified that the examination prescribed for filling up vacancies in the Lower Division of the Secretariat Clerical Service of the Government of Bengal and clerical vacancies in certain other Government offices, mentioned in rule 20 thereof, will be held at Calcutta in August 1931.

The probable number of vacancies to be competed for is twenty-one, of which about twelve are specially reserved for Muhammadans.

Candidates should pay the prescribed fee (Rs. 10) into the nearest treasury and forward the treasury receipt to the Secretary to the Government of Bengal, Finance, Commerce and Marine Departments, Calcutta.

Candidates paying their fees in Calcutta should pay them into the Imperial Bank of India.

Application for permission to appear at the examination should be in the form given below, and should be made to the Secretary to the Government of Bengal, Finance, Commerce and Marine Departments, Calcutta, not later than the 31st July 1931, after which no application will be received.

Form.

To

The Secretary to the Government of Bengal,
Finance, Commerce and Marine Departments,
Calcutta.

Sir,

I request permission to present myself at the ensuing examination of the candidates for appointment in the Clerical Service of the Secretariat of the Government of Bengal. I was born on the day of 19 .

2. A treasury receipt for the fee of Rs. 10 is forwarded herewith.

I am, etc.,

Copies of the examination rules now in force may be obtained on application to the Registrar, Finance Department.

The attention of intending candidates is called to rule 10 of the examination rules prescribing the particulars and documents which should accompany the application for permission to appear at the examination.

The dates when and the place where the examination will be held will be communicated to the candidates who will be considered eligible to sit for the examination.

Intending candidates should note that the age restriction laid down in rule 10 (*ii*) of the examination rules will be strictly enforced, that is, the candidate must not be less than eighteen and not more than twenty-three years of age on the 1st August of the current year, and that no person overage, *whether in Government service or not*, will be eligible.

Candidates are particularly requested to send *in original* the University Matriculation Examination certificates as evidence of their age. The certificates regarding their moral character prescribed by rule 10 (*iii*) should also be *in original*. These certificates will be returned along with admission cards which will be issued to the candidates for the examination.

E. N. BLANDY,
Secy. to the Govt. of Bengal.

COMMERCE DEPARTMENT.

NOTIFICATION.

No. 876T. Com.—20th June 1931.—The following draft of amendments, which, with the previous sanction of the Governor-General in Council, and in exercise of the power conferred by section 9 of the Indian Petroleum Act, 1899 (VIII of 1899), the Governor in Council intends to make in the rules for regulating the importation, possession, and transport of petroleum, published under the Government of Bengal, Marine Department, notification No. 143 Marine, dated the 30th November 1914, and subsequently amended, is published, as required by sub-section (*1*) of section 24 of the said Act, for the information of persons likely to be affected thereby.

2. The draft amendments will be taken into consideration on or after the 15th August 1931, and any objections or suggestions with regard thereto received by the undersigned before that date will be duly considered:—

Draft amendments.

(1) At the end of rule 1 of Chapter II of Part II of the said rules, the following proviso shall be added, namely:—

"Provided that dangerous or non-dangerous petroleum in tank wagons may be transported across the river Hooghly by wagon ferry."

(2) At the end of clause (*b*) of rule 2 of Part III of the said rules, the following shall be added, namely:—

"that is, petroleum which is not certified petroleum or is not petroleum having a flash point above 150°Fahrenheit."

(3) In rule 4 of Part III of the said rules, after the words "at Budge Budge," the following shall be inserted, namely:—

"or to the Jetty Superintendent or to the Dock Superintendent, Calcutta."

(4) In rule 5 of Part III of the said rules, after the word "Budge Budge" the following shall be inserted, namely:—

"or to the Jetty Superintendent or to the Dock Superintendent, Calcutta."

E. N. BLANDY,
Secy. to the Govt. of Bengal.

PUBLIC WORKS DEPARTMENT.

Establishment.

NOTIFICATION.

No. 40. — 2nd July 1931. — Babu Girija Prasanna Basu, Assistant Engineer, Chittagong Division, is granted, under rule 81 (*b*) (*ii*) of the Fundamental Rules, leave on average pay for the period from the 29th June to the 4th July 1931 (both days inclusive).

W. J. KERR,
Chief Engineer, Bengal (offg.).

DEPARTMENT OF AGRICULTURE AND INDUSTRIES.

Agriculture.

NOTIFICATIONS.

Minister-in-charge: The Hon'ble Khan Bahadur Maulvi K. G. M. Faroqui.

Birbhum.—No. 335T.A.I.—25th June 1931. —Mr. G. S. Dutt, I.C.S., Collector of Birbhum, is appointed to be an official member of the Board of the Agricultural Department in Bengal reconstituted in resolution No. 43-T.A.I., dated the 23rd April 1930.

Birbhum.—No. 336T.A.I — 25th June 1931.—Mr. G. S. Dutt, I.C.S., Collector of Birbhum, is appointed to be an official member of the Bengal Silk Committee reconstituted under this department resolution No. 3508Agri., dated the 19th July 1930.

Excise.

NOTIFICATIONS.

Minister-in-charge: The Hon'ble Mr. Bijoy Prasad Singh Roy.

No. 339T.A.I.—26th June 1931.—In exercise of the powers conferred by section 86 of the Bengal Excise Act, 1909 (Bengal Act V of 1909), the Government of Bengal (Ministry of Excise) are pleased to direct that the following amendment be made in the rules published under notification No. 601S.R., dated the 30th March 1915, as subsequently amended, namely:—

Delete the entry "Jessore—in the municipality of Kotechandpur" in clause (*i*) of paragraph 1, under the heading "Closing hours" of rule 201 of the said rules.

Calcutta.—No. 2789Ex.—30th June 1931.—Maulvi Muhammad Ghulam Kadir, Superintendent of Excise and Salt, now Personal Assistant to the Commissioner of Excise and Salt, Bengal, is allowed leave on average pay for fourteen days, under article 81 (*b*) (*ii*) of the Fundamental Rules, with effect from the 10th June 1931.

Calcutta.—No. 2790Ex.—30th June 1931.—Babu Hem Chandra De, Superintendent of Excise and Salt, Distillery Branch, Calcutta, is appointed to act as Personal Assistant to the Commissioner of Excise and Salt, Bengal, in addition to his own duties, during the absence on leave, of Maulvi Muhammad Ghulam Kadir.

Calcutta.—No. 2834Ex.—3rd July 1931.—Babu Aswini Kumar Basu, Deputy Commissioner of Excise and Salt and Collector of Excise, Calcutta, is allowed leave on average pay for two months, under the proviso to rule 81 (*b*) (*ii*) of the Fundamental Rules, in extension of the leave already granted to him under orders of the 5th May 1931.

Calcutta.—No. 2835Ex.—3rd July 1931.—Maulvi Safiqur Rahman Siddik, Inspector of Excise and Salt, was posted to Calcutta on the expiry of his leave and appointed to act as Superintendent of Excise and Salt, Detection Branch, Calcutta, from the 20th May to 30th June 1931, *vice* Maulvi Mobinuddin Ahmed, appointed to officiate as Deputy Commissioner of Excise and Salt, Bengal.

L. R. FAWCUS,
Secy. to the Govt. of Bengal (offg.).

Orders by the Registrar of Co-operative Societies, Bengal.

No. 171-L.—27th June 1931.—Whereas I am of opinion, as the result of an enquiry held into the constitution, working and financial condition of the Balia Joutha Bank (registered No. 506 of 1920), in the subdivision Chandpur in the district of Tippera, under sub-section (*1*) of section 35 of the Co-operative Societies Act, II of 1912, that the society ought to be dissolved.

Now, therefore, in exercise of the power conferred by sub-section (*1*) of section 39 of the same Act, I hereby cancel the registration of the said society.

And further, in exercise of the power conferred by sub-section (*1*) of section 42 of the same Act, I hereby appoint the Departmental Officer in charge of the Chandpur Circle to be liquidator of the said society.

No. 172-L.—27th June 1931.—Whereas I am of opinion, as the result of an enquiry held into the constitution, working and financial condition of the Gazipur Joutha Bank, No. II (registered No. 238 of 1920), in the subdivision Chandpur in the district of Tippera, under sub-section (*1*) of section 35 of the Co-operative Societies Act, II of 1912, that the society ought to be dissolved.

Now, therefore, in exercise of the power conferred by sub-section (*1*) of section 39 of the same Act, I hereby cancel the registration of the said society.

And further, in exercise of the power conferred by sub-section (*1*) of section 42 of the same Act, I hereby appoint the Departmental Officer in charge of the Chandpur Circle to be liquidator of the said society.

No. 173-L. 27th June 1931.—Whereas I am of opinion, as the result of an enquiry held into the constitution, working and financial condition of the Joara Joutha Bank (registered No. 515 of 1914), in the subdivision Sadar in the district of Chittagong, under sub-section (*1*) of section 35 of the Co-operative Societies Act, II of 1912, that the society ought to be dissolved.

Now, therefore, in exercise of the power conferred by sub-section (*1*) of section 39 of the same Act, I hereby cancel the registration of the said society.

Any further, in exercise of the power conferred by sub-section (*1*) of section 42 of the same Act, I hereby appoint the Departmental Officer in charge of the Chittagong Circle to be liquidator of the said society.

No. 174-L.—30th June 1931.—Whereas I am of opinion, as the result of an enquiry held into the constitution, working and financial condition of the Purba Chakputikhali Joutha Bank (registered No. 12 (Khulna) of 1927), in the subdivision Bagerhat in the district of Khulna, under sub-section (*1*) of section 35 of the Co-operative Societies Act, II of 1912, that the society ought to be dissolved.

Now, therefore, in exercise of the power conferred by sub-section (*1*) of section 39 of the same Act, I hereby cancel the registration of the said society.

And further, in exercise of the power conferred by sub-section (*1*) of section 42 of the same Act, I hereby appoint the Departmental Officer in charge of the Bagerhat Circle to be liquidator of the said society.

No. 175-L.—30th June 1931.—Whereas I am of opinion, as the result of an enquiry held into the constitution, working and financial condition of the Char Dumuria Joutha Bank (registered No. 30-D of 1923), in the subdivision Munshiganj in the district of Dacca, under sub-section (*1*) of section 35 of the Co-operative Societies Act, II of 1912, that the society ought to be dissolved.

Now, therefore, in exercise of the power conferred by sub-section (*1*) of section 39 of same Act, I hereby cancel the registration of the said society.

And further, in exercise of the power conferred by sub-section (*1*) of section 42 of the same Act, I hereby appoint the Departmental Officer in charge of the Munshiganj Circle to be liquidator of the said society.

S. K. GANGULY,

Regr., Co-operative Societies, Bengal.

Orders by the Commissioner of Excise and Salt, Bengal.

No. 9Exc.—4th July 1931.—Maulvi Kazi Abdur Razzaque, Inspector of Excise and Salt, Cox's Bazar Range, in the district of Chittagong, is transferred to Chittagong Sadar, until further orders.

S. K. RAHA,

Commr. of Excise and Salt, Bengal.

REVENUE DEPARTMENT.

Land Revenue.

NOTIFICATIONS.

Dacca.—No. 8225L.R.—2nd July 1931.—Under the provisions of section 3 (*14*) of the Bengal Tenancy Act, 1885 (Act VIII of 1885), Babu Apurba Ranjan Barua, Deputy Collector, Dacca, is authorised to discharge, in the district of Dacca, the functions of a Revenue Officer, under Chapter X of that Act, so far as they relate to survey and the preparation of record-of-rights.

He is also vested with the powers of an Assistant Settlement Officer, under Chapter VII, Part I, of the rules under the Bengal Tenancy Act, in respect of the aforesaid area.

Malda.—No. 8236L.R.—2nd July 1931. In exercise of the powers conferred by sub-section (*3*) of section 158A of the Bengal Tenancy Act, 1885 (VIII of 1885), the Governor in Council is pleased to vest Babu Umesh Chandra Sil, Sub-Deputy Collector and Certificate Officer, Malda, with powers to perform the functions of a Certificate Officer under the Bengal Public Demands Recovery Act, 1913, for the purposes of the said section and in respect of the recovery of arrears of rent (including cesses) due to the Mathurapur Estate in the district of Malda.

Burdwan-Hooghly-Howrah.—No. 8350L.R.—6th July 1931.—Maulvi Abdul Karim, No. II, Sub-Deputy Collector and Assistant Settlement Officer, Burdwan-Hooghly-Howrah Settlement, is allowed leave on average pay, under rule 81 (*b*) (*ii*) of the Fundamental Rules, for a period of three months and twenty-eight days, with effect from the 17th June 1931, or any subsequent date from which he actually availed himself of the leave.

Land Acquisition.

NOTIFICATIONS.

Burdwan.—No. 8200L.A.—2nd July 1931.—Whereas it appears to the Governor in Council that land is likely to be required to be taken by Government at the expense of the Asansol Mines Board of Health for a public purpose, viz., for office and staff quarters of the Asansol Mines Board of Health at Raniganj, in the village of Raniganj, jurisdiction list No. 24, thana Raniganj, pargana Shergarh, district Burdwan, it is hereby notified that for the above purpose a piece of land comprising parts of cadastral plots Nos. 4726 and 5030 and measuring more, or less, 0·253 of an acre, is likely to be required within the aforesaid village of Raniganj.

This notification is made, under the provisions of section 4 of Act I of 1894, to all whom it may concern.

A plan of the land may be inspected in the office of the Special Land Acquisition Officer, Burdwan, as well as in that of the Asansol Mines Board of Health, Asansol.

In exercise of the powers conferred by the aforesaid section, the Governor in Council is pleased to authorise the officers for the time being engaged in the undertaking, with their servants and workmen, to enter upon and survey the land and do all other acts required or permitted by that section.

Any person interested in the above land, who has any objection to the acquisition thereof, may, within thirty days after the date on which public notice of the substance of this notification is given in the locality, file an objection in writing before the Collector of Burdwan.

Bogra.—No. 8209L.A.—2nd July 1931.—Whereas it appears to the Governor in Council that land is likely to be required to be taken by Government at the expense of the Bogra district board for a public purpose, viz., for a union board road from Bogra to Kahaloo under Nisindara union board, in the village of Sutrapur, jurisdiction list No. 82, thana Bogra, pargana Shelbarsha, zilla Bogra, it is hereby notified that for the above purpose a piece of land comprising cadastral plot No. 173 and measuring, more or less, 0·10 of an acre, is likely to be required within the aforesaid village of Sutrapur.

This notification is made, under the provisions of section 4 of Act I of 1894, to all whom it may concern.

A plan of the land may be inspected in the office of the Collector of Bogra.

In exercise of the powers conferred by the aforesaid section, the Governor in Council is pleased to authorise the officers for the time being engaged in the undertaking, with their servants and workmen, to enter upon and survey the land and do all other acts required or permitted by that section.

Any person interested in the above land, who has any objection to the acquisition thereof, may, within thirty days after the date on which public notice of the substance of this notification is given in the locality, file an objection in writing before the Collector of Bogra.

Calcutta.—No. 8212L.A.—2nd July 1931.—In exercise of the powers conferred by section 48 (*1*) of the Land Acquisition Act, I of 1894, the Governor in Council is pleased to withdraw from the acquisition of a piece of land measuring, more or less, 2 cottahs 13 chittaks and 20 square feet of standard measurement, equivalent to 0·0469 of an acre, being premises No. 21/3, Durga Charan Mitter Street and bounded as described below, which was included in the area notified for acquisition under declaration No. 3586L.A., dated the 13th March 1930, published at pages 404-405, Part I of the *Calcutta Gazette* of the 20th idem and required by the Calcutta Improvement Trust for Scheme No. VII-H (Central Avenue—from Beadon Street to Grey Street) in Ward No. III of the Calcutta Municipality—

Boundaries.

North—By Durga Charan Mitter Street.

East—By the private bustee passage of premises Nos. 21, 21/1, 21/2 and 21/3, Durga Charan Mitter Street.

South and West—By premises Nos. 21, 21/1 and 21/2, Durga Charan Mitter Street.

Pabna.—No. 8215L.A.—2nd July 1931.—The Governor in Council is pleased to cancel the notification No. 11568L.A., dated the 23rd September 1930, under section 4 of the Land Acquisition Act, I of 1894, published at page 1567, Part I of the *Calcutta Gazette* of the 2nd October 1930, for the acquisition of land required by the Umaipur union board for halot in the village of Ishupshahi-Salongi.

Chittagong.—No. 8218L.A. — 2nd July 1931.—Whereas it appears to the Governor in Council that land is likely to be required to be taken by Government at the expense of the Port Commissioners, Chittagong, for a public purpose, viz., for a site for the Port Commissioners' new workshops and stores in the village Gosaildanga, thana Double Moorings, zilla Chittagong, it is hereby notified that for the above purpose a piece of land measuring, more or less, 3·05 acres, covering the revisional survey plots Nos. 4940, 4997, 4941, 4942, 4943, 4944, 4945, 4946, 4948, 4952, 4949, 4950, 4951, 4953, 4954, 4955, 4956, 4957, 4958, 4960, 4961, 4962, 4963, 4971, 4972, 4973, 4947, 4965 and 4991, is likely to be required within the aforesaid village of Gosaildanga.

This notification is made, under the provisions of section 4 of Act I of 1894, to all whom it may concern.

In exercise of the powers conferred by the aforesaid section, the Governor in Council is pleased to authorise the officers for the time being engaged in the undertaking, with their servants and workmen, to enter upon and survey the land and do all other acts required or permitted by that section.

Any person interested in the above land, who has any objection to the acquisition thereof, may, within thirty days after the date on which public notice of the substance of this notification is given in the locality, file an objection in writing before the Collector of Chittagong.

Bogra.—No. 8227L.A.—2nd July 1931.—The Governor in Council is pleased to cancel the notification No. 11998L.A., dated the 13th September 1929, under section 4 of the Land Acquisition Act, I of 1894, published at page 1766, Part I of the *Calcutta Gazette* of the 19th idem, in respect of the proposed acquisition of, more or less, 3·58 acres comprising cadastral plots Nos. 1044, 1181, 1102, 1182, 1046, 1047, 1045, 1049, 1050, 1074, 1185, 1051, 1052, 1053, 1073, 1072, 1070, 1056, 1055, and 1054 required by the Bogra Municipality for the southren burial ground of the Municipality in the village of Thanthania, pargana Shelbarsha, district Bogra.

Burdwan.—No. 8230L.A.—2nd July 1931.—Whereas it appears to the Governor in Council that land is likely to be required to be taken by Government at the public expense for a public purpose, viz., for constructing 1st to 6th miles and part of 7th mile of Distributary No. 6A of the Main Canal, Damodar Canal Project, in the villages of Mirzapur, Royan, Jamar or Jamra, Jaykrishnapur or Basatpur, Raipur, Krishnanagar-Khordchak or Korarchak, Bararichak, Hatkanda and Ramnagar, jurisdiction list Nos. 50, 49, 69, 162,

163, 164, 169, 168 and 170, respectively, thana Burdwan, parganas Burdwan and Shahabad, district Burdwan, it is hereby notified that for the above purpose a piece of land measuring, more or less, 49·75 acres, starting from a point 55 feet south-west from chainage 0 foot which is the central point of the Distributary No. 6, Main Canal, at chainage 25,950 feet of the same distributary in mauza Mirzapur and proceeding generally towards the south-east through mauzas Royan, Jamar or Jamra, Jaykrishnapur or Basatpur, Raipur, Krishnanagar-Khordchak or Korarchak, Bararichak, Hatkanda and Ramnagar and terminating at chainage 31,719 feet, varying in width from 55 feet to 287 feet and being 31,664 feet in length, is likely to be required within the aforesaid villages of Mirzapur, Royan, Jamar or Jamra, Jaykrishnapur or Basatpur, Raipur, Krishnanagar, Khordchak or Korarchak, Bararichak, Hatkanda and Ramnagar.

This notification is made, under the provisions of section 4 of Act I of 1894, to all whom it may concern.

A plan of the land may be inspected in the office of the Special Land Acquisition Officer, Burdwan, as well as in that of the Executive Engineer, Damodar Canal Division, Burdwan.

In exercise of the powers conferred by the aforesaid section, the Governor in Council is pleased to authorise the officers for the time being engaged in the undertaking, with their servants and workmen, to enter upon and survey the land and do all other acts required or permitted by that section.

Any person interested in so much of the above land as are not waste or arable, who has any objection to the acquisition thereof, may, within thirty days after the date on which public notice of the substance of this notification is given in the locality, file an objection in writing before the Collector of Burdwan.

In exercise of powers conferred by section 17 (4) of the Land Acquisition Act, I of 1894, as amended by Act XXXVIII of 1923, the Governor in Council is pleased to direct that the provision of section 5A of the Act shall not apply to the waste or arable portions of the land in this case.

Birbhum.—No. 8240L.A.—2nd July 1931.—Whereas it appears to the Governor in Council that land is likely to be required to be taken by Government at the expense of the district board of Birbhum for a public purpose, viz., for the construction of a tube-well, in the village of Sainthia, jurisdiction list No. 95, thana Sainthia, pargana Sabak Moureswar, district Birbhum, it is hereby notified that for the above purpose a piece of land measuring, more or less, 0·0023 of an acre, bounded on the—

North, East and West—By the land belonging to Panchanan Ghosh and others,

South—By union board road,

is likely to be required within the aforesaid village of Sainthia.

This notification is made, under the provisions of section 4 of Act I of 1894, to all whom it may concern.

A plan of the land may be inspected in the office of the Collector of Birbhum.

In exercise of the powers conferred by the aforesaid section, the Governor in Council is pleased to authorise the officers for the time being engaged in the undertaking, with their servants and workmen, to enter upon and survey the land and do all other acts required or permitted by that section.

Any person interested in the above land, who has any objection to the acquisition thereof, may, within thirty days after the date on which public notice of the substance of this notification is given in the locality, file an objection in writing before the Collector of Birbhum.

Pabna.—No. 8286L.A.—3rd July 1931.—Whereas it appears to the Governor in Council that land is likely to be required to be taken by Government at the expense of the district board, Pabna, for a public purpose, viz., for the Boyra-Suppgacha Diversion Road, in the villages of Belta, Athara Takarpara, Bhatpiari, Kechuaata and Kharua, jurisdiction list Nos. 148, 147, 114, 118 and 119, respectively, thana Serajganj, parganas Barabaju and Kagmari, zilla Pabna, it is hereby notified that for the above purpose a piece of land comprising parts of cadastral plots Nos. 86, 87, 116, 122, 123, 124, 125, 126, 131, 134, 135, 142, 144, 145, 179, 180, 181, 219, 239, 240, 241, 242, 243, 246, 248, 249, 251, 252, 274, 275, 276, 277, 278, 626, 632, 634, 635, 639, 640, 641, 642, 666, 667, 668, 669 of village Belta, 231, 232, 584, 585, 588, 589, 590, 610, 611, 612, 613, 614, 615, 616, 618 of village Athara Takarpara, 562, 580, 581, 584, 586, 591, 600, 603, 604, 618, 619, 620, 622, 623, 624, 625, 626, 644, 645, 656, 661, 664, 665, 666, 667, 671, 678, 679, 680, 697, 700, 2149, 2237, 2238, 2242, 2243, 2244, 2245, 2307, 2313, 2328, 2329, 2330, 2331, 2334, 2335, 2358, 2360, 2361, 2362, 2365, 2366, 2367, 2368, 2506, 2507, 2512, 2513, 2514, 2515, 2538, 2543, 2544 of village Bhatpiari, 16, 82, 83, 84, 85, 121, 122, 123, 124, 125, 175, 176, 177, 178, 179, 184, 185, 190, 191, 192, 206, 208, 213, 214, 217, 218, 221, 222, 223, 336, 337, 342, 343, 344, 346, 357, 358, 359, 360, 466, 467, 468, 472, 473, 482, 483, 488, 489, of village Kechuaata, 815, 817, 818, 819, 820, 830, 831 of village Kharua and measuring, more or less, 9·45 acres, is likely to be required within the aforesaid villages of Belta, Athara Takarpara, Bhatpiari, Kechuaata and Kharua.

This notification is made, under the provisions of section 4 of Act I of 1894, to all whom it may concern.

A plan of the land may be inspected in the office of the Subdivisional Officer, Serajganj.

In exercise of the powers conferred by section 17 (4) of the Land Acquisition Act, I of 1894, as amended by Act XXXVIII of 1923, the Governor in Council is pleased to direct that the provisions of section 5A of the Act shall not apply in this case.

Malda.—No. 8329L.A.—4th July 1931.—Whereas it appears to the Governor in Council that land is likely to be required to be taken by Government at the expense of the district board of Malda for a public purpose, viz., for the diversion of a road from Madia Ferry Ghat to Nista in the villages of Sultanpur, Nista and Betha Ekbona, jurisdiction list Nos. 319, 322, 323, respectively, thana Ratua, pargana Kankjole, district Malda, it is hereby notified that for the above purpose a piece of land measuring, more or less, 12·80 acres, bounded on the—

North—By the district board road,

East—By the lands of Jogeswar Majhi, Dhaneswar Tanti, Panu Majhi, Lakshi Kanta Misra, Aghari Mandal, Nitya Nanda Mandal, Jagabandhu Mandal, Jagannath Mandal, village road, Ram Lal Mandal, Hari Mohan Chowdhuri, Taher Bakhsh, Haradhan Mandal, Jagir Shaikh, Ajoo Shaikh, Shaikh Amiruddin, Shaikh Sanoo, Shaikh Rajab Ali, Shaikh Johar, Shaikh Nadir, Shaikh Sovani, Shaikh Gafur, Badir Shaikh, Tetru Shaikh, Hasrat Mandal, Boran Shaikh, Emamdi Shaikh, Shaikh Abja, Shaikh Paigambar and Bahauddin Shaikh,

South—By the village road,

West—By the lands of Jogeswar Majhi, Dhaneswar Tanti, Panu Majhi, Chandra Mohan Jha, Lakshi Nath Misra, Aghari Mandal, Nitya Nanda Mandal, Jagabandhu Mandal, Kali Mandal, Jagannath Mandal, Hari Mohan Chowdhuri, village road, Ram Lal Mandal, Taher Bakhsh, Haradhan Mandal, Ajoo Shaikh, Shaikh Rajab Ali, Shaikh Sanoo, Shaikh Amiruddin, Shaikh Johar, Aswini Jha, Shaikh Gafur, Shaikh Tatru, Hasrat Mandal, Shaikh Suja, Shaikh Nadir, Shaikh Emamuddin, Shaikh Boran, Shaikh Abja, Shaikh Jagir, Shaikh Manir and Abdul Shaikh,

is likely to be required within the aforesaid villages of Sultanpur, Nista and Betha Ekbona.

This notification is made, under the provisions of section 4 of Act I of 1894, to all whom it may concern.

A plan of the land may be inspected in the office of the Collector of Malda.

In exercise of the powers conferred by the aforesaid section, the Governor in Council is pleased to authorise the officers for the time being engaged in the undertaking, with their servants and workmen, to enter upon and survey the land and do all other acts required or permitted by that section.

Any person interested in the above land, who has any objection to the acquisition thereof, may, within thirty days after the date on which public notice of the substance of this notification is given in the locality, file an objection in writing before the Collector of Malda.

Burdwan.—No. 8332L.A.—4th July 1931.—Whereas it appears to the Governor in Council that land is likely to be required to be taken by Government at the public expense for a public purpose, viz., for constructing road approaches of the bridge at chainage 18·100 feet of Distributary No. 6, Main Canal, Damodar Canal Project, in the village of Mirzapur, jurisdiction list No. 50, thana Burdwan, pargana Shahabad, district Burdwan, it is hereby notified that for the above purpose two pieces of land altogether measuring, more or less, 0·33 of an acre, bounded on the—

Block A:

North—By the lands of Shekh Aolad Mandal and Raja Mandal and others,

East—By the land of Shekh Aolad Mandal,

South—By the land of Irrigation Department,

West—By the lands of Raja Mandal and others, Shekh Aolad Mandal and Irrigation Department,

Block B:

North—By the land of Irrigation Department,

East—By the land of Shekh Aolad Mandal,

South—By the lands of Raja Mandal and others and Shekh Aolad Mandal,

West—By the lands of Raja Mandal and others and Shekh Aolad Mandal,

are likely to be required within the aforesaid village of Mirzapur.

This notification is made, under the provisions of section 4 of Act I of 1894, to all whom it may concern.

A plan of the land may be inspected in the office of the Special Land Acquisition Officer, Burdwan, as well as in that of the Executive Engineer, Damodar Canal Division, Burdwan.

In exercise of the powers conferred by the aforesaid section, the Governor in Council is pleased to authorise the officers for the time being engaged in the undertaking, with their servants and workmen, to enter upon and survey the land and do all other acts required or permitted by that section.

In exercise of the powers conferred by section 17 (*4*) of the Land Acquisition Act I of 1894 as amended by Act XXXVIII of 1923, the Governor in Council is pleased to direct that the provisions of section 5A of the Act shall not apply in this case.

Calcutta.—No. 8338L.A.—6th July 1931.—Whereas it appears to the Governor in Council that land is likely to be required to be taken by Government at the public expense for a public purpose, viz., for the extension of the bullock shed at Cossipore in ward No. 32 of the Calcutta Municipality in the City of Calcutta, it is hereby notified that for the above purpose a piece of land comprising portion of premises No. 10, Gun Foundry Road, measuring, more or less, 0·008 of an acre, and bounded on the—

North, West and South—By premises No. 7, Gun Foundry Road (Cossipore Gun and Shell Factory),

East—By the remaining portion of premises No. 10, Gun Foundry Road,

is likely to be required within the aforesaid ward No. 32 of the Calcutta Municipality in the city of Calcutta.

This notification is made, under the provisions of section 4 of Act I of 1894, to all whom it may concern.

A plan of the land may be inspected in the office of the Second Land Acquisition Collector at No. 5, Bankshall Street, Calcutta.

In exercise of the powers conferred by the aforesaid section, the Governor in Council is pleased to authorise the officers for the time being engaged in the undertaking, with their servants and workmen, to enter upon and survey the land and do all other acts required or permitted by that section.

Any person interested in the above land, who has any objection to the acquisition thereof, may, within thirty days after the date on which public notice of the substance of this notification is given in the locality, file an objection in writing before the Second Land Acquisition Collector, at No. 5, Bankshall Street, Calcutta.

Burdwan.—No. 8359L.A.—6th July 1931.—Whereas it appears to the Governor in Council that land is likely to be required to be taken by Government at the expense of the Asansol Municipality for a public purpose, viz., for the extension of Young Road in connection with the Asansol Water Supply Scheme at Asansol Municipality, in the village of Asansol Municipality, jurisdiction list No. 24, thana Asansol, pargana Shergarh, district Burdwan, it is hereby notified that for the above purpose two pieces of land comprising parts of the cadastral plots Nos. 2124, 2125, 2126, 2132, 2133, 2134, 2147, 2148, 2149, 2150, 2151, 2152, 2153, 2154, 2198, 2200 and 2207 and altogether measuring, more or less, 0·2632 of an acre, are likely to be required within the aforesaid village of Asansol Municipality.

This notification is made, under the provisions of section 4 of Act I of 1894, to all whom it may concern.

A plan of the land may be inspected in the office of the Special Land Acquisition Officer, Burdwan, as well as in that of the Chairman, Asansol Municipality, Asansol.

In exercise of the powers conferred by the aforesaid section, the Governor in Council is pleased to authorise the officers for the time being engaged in the undertaking, with their servants and workmen, to enter upon and survey the land and do all other acts required or permitted by that section.

Any person interested in the above land, who has any objection to the acquisition thereof, may, within thirty days after the date on which public notice of the substance of this notification is given in the locality, file an objection in writing before the Collector of Burdwan.

Birbhum.—No. 8433L.A.—6th July 1931.—The Governor in Council is pleased to cancel so much of the notification No. 7798L.A., dated the 27th June 1930, published at page 1013, Part I of the *Calcutta Gazette* of the 3rd July 1930, in respect of the proposed acquisition of a strip of land required for distributary No. 2 of the Bakreswar Canal in the district of Birbhum as relates to the tank, viz., plot No. 1013 in the village of Kamardangal at the end of the said distributary.

ERRATUM.

Darjeeling.—No. 8341L.A.—6th July 1931. *Substitute* the words "Improvement Fund" for the words "district board" in line 5 and also *insert* the words "by the Darjeeling district board" after the word "construction" in line 6 of the notification No. 13856L.A., dated the 26th November 1930, published at page 1919, Part I of the *Calcutta Gazette* of the 4th December 1930, in respect of the acquisition of land required by the Darjeeling district board for the construction of a drain from the Himalayan Ganges Road to the Mahananda river in the Kholaising Buktari Jote, mauza Dabgram, pargana Baikanthapur, district Darjeeling.

DECLARATIONS.

Birbhum.—No. 8197L.A.—2nd July 1931.—Whereas it appears to the Governor in Council that land is required to be taken by Government at the public expense for a public purpose, viz., for diversion of Shahapur-Kamardangal Road in the 4th mile of the Bakreswar main canal in the villages of Nam-Shahapur and Ramchandrapur, jurisdiction list Nos. 187 and 188, respectively, in thana Dubrajpur, pargana Jainujial, district Birbhum, it is hereby declared that for the above purpose a piece of land comprising portions of cadastral plots Nos. 688, 979, 980, 981, 982, 983, 992, 999, 1001, 1002, 1004, 1006, 1007, 1010, 1011 and 1012 of Ramchandrapur and portion of cadastral plot No. 339 of Nam-Shahapur and measuring, more or less, 0·533 of an acre, is required within the aforesaid villages of Nam-Shahapur and Ramchandrapur.

This declaration is made, under the provisions of section 6, Act I of 1894, to all whom it may concern.

A plan of the land may be inspected in the office of the Collector of Birbhum.

Birbhum.—No. 8203L.A.—2nd July 1931.—Whereas it appears to the Governor in Council that land is required to be taken by Government at the public expense for a public purpose, viz., for diversion of Dubsanka and Banssanka Road in the 6th mile of the Bakreswar main canal, in the villages of Dubsanka and Banssanka, jurisdiction list Nos. 148 and 147, respectively, in thana Suri, pargana Alinagore, district Birbhum, it is hereby declared that for the above purpose a piece of land comprising portions of cadastral plots Nos. 110, 111, 125, 126, 127, 131, 132, 133, 136, 137, 138 and 154 of Dubsanka and portions of cadastral plots Nos. 544, 597, 599 and 613 of Banssanka and measuring, more or less, 0·41 of an acre, is required within the aforesaid villages of Dubsanka and Banssanka.

This declaration is made, under the provisions of section 6, Act I of 1894, to all whom it may concern.

A plan of the land may be inspected in the office of the Collector of Birbhum.

Howrah.—No. 8206L.A.—2nd July 1931.—Whereas it appears to the Governor in Council that land is required to be taken by Government at the expense of the Howrah Municipality for a public purpose, viz., for extension of the Muhammadan burial ground, in the village of Bantra Dakshin, pargana Boro, zilla Howrah, it is hereby declared that for the above purpose a piece of land measuring, more or less, 0·66 of an acre, bounded on the—

North—By the tank of Sheikh Ismail and others,

East—By the Belilious Park belonging to the Howrah Municipality,

South—By the lands of Sheikh Ismail and others,

West—By the Bantra Muhammadan burial ground,

is required within the aforesaid village of Bantra Dakshin.

This declaration is made, under the provisions of section 6, Act I of 1894, to all whom it may concern.

A plan of the land may be inspected in the office of the Collector of Howrah.

Birbhum.—No. 8221L.A.—2nd July 1931.—Whereas it appears to the Governor in Council that land is required to be taken by Government at the public expense for a public purpose, viz., for diversion of Shahapur-Sukdebpur Road in the 5th mile of the Bakreswar main canal in the villages of Ramchandrapur, Dhuliara and Sukdebpur, jurisdiction list Nos. 188, 189 and 190, respectively, in thana Dubrajpur, parganas Jainujial and Alinagore, district Birbhum, it is hereby declared that for the above purpose two pieces of land comprising portions of cadastral plots Nos. 1119, 1128, 1129, 1130, 1131, 1132, 1139, 1140, 1165 and 1166 of Ramchandrapur, portions of cadastral plots Nos. 548 and 549 of Dhuliara and portions of cadastral plots Nos. 728, 729, 759 and 758 of Sukdebpur and altogether measuring, more or less, 0·61 of an acre, are required within the aforesaid villages of Ramchandrapur, Dhuliara and Sukdebpur.

This declaration is made, under the provisions of section 6, Act I of 1894, to all whom it may concern.

A plan of the land may be inspected in the office of the Collector of Birbhum.

Burdwan.—No. 8233L.A.—2nd July 1931.—Whereas it appears to the Governor in Council that land is required to be taken by Government at the public expense for a public purpose, viz., for constructing 1st to 6th miles and part of 7th mile of Distributary No. 6A of the Main Canal, Damodar Canal Project, in the villages of Mirzapur, Royan, Jamar or Jamra, Jaykrishnapur or Basatpur, Raipur, Krishnanagar, Khordchak or Korarchak, Bararichak, Hatkanda and Ramnagar, jurisdiction list Nos. 50, 49, 69, 162, 163, 164, 169, 168 and 170, respectively, in thana Burdwan, parganas Burdwan and Shahabad, zilla Burdwan, it is hereby declared that for the above purpose two pieces of land altogether measuring, more or less, 48·91 acres, starting from a point 55 feet south-west from chainage 0 foot which is the central point of Distributary No. 6, Main Canal, at chainage 25,950 feet of the same distributary in mauza Mirzapur and running generally towards the south-east through mauzas Royan, Jamar or Jamra, Jaykrishnapur or Basatpur, Raipur, Krishnanagar, Khordchak or Korarchak, Bararichak, Hatkanda and Ramnagar, up to chainage 31,465 feet and again commencing from chainage 31,592 feet proceeding towards the same direction and terminating at chainage 31,719 feet, varying in width from 25 feet to 287 feet and being 31,537 feet in length, are required within the aforesaid villages of Mirzapur, Royan, Jamar or Jamra, Jaykrishnapur or Basatpur, Raipur, Krishnanagar, Khordchak or Korarchak, Bararichak, Hatkanda and Ramnagar.

This declaration is made, under the provisions of section 6, Act I of 1894, to all whom it may concern.

A plan of the land may be inspected in the office of the Special Land Acquisition Deputy Collector, Burdwan, as well as in that of the Executive Engineer, Damodar Canal Division, Burdwan.

Burdwan.—No. 8283L.A.—3rd July 1931.—Whereas it appears to the Governor in Council that land is required to be taken by Government at the public expense for a public purpose, viz., for constructing 2nd mile up to 3,720 feet of distributary No. 2, Branch Canal, in connection with the Damodar Canal Project, in the villages of Sur, Bhota, Kutruki and Srirampur, jurisdiction list Nos. 107, 108, 135 and 143, respectively, in thanas Ausgram and Galsi, pargana Burdwan, district Burdwan, it is hereby declared that for the above purpose a piece of land measuring, more or less, 2·14 acres, commencing at the end of 1st mile distributary No. 2, Branch Canal, at chainage 5,280 feet and proceeding generally towards the south-east through mauzas Sur, Bhota, Kutruki and Srirampur, terminating at chainage 9,000 feet in mauzas Bhota and Srirampur, varying in width from 22 feet to 105 feet and being 3,720 feet in length, is required within the aforesaid villages of Sur, Bhota, Kutruki and Srirampur.

This declaration is made, under the provisions of section 6 of Act I of 1894, to all whom it may concern.

A plan of the land may be inspected in the office of the Special Land Acquisition Officer, Burdwan, as well as in that of the Executive Engineer, Damodar Canal Division, Burdwan.

Burdwan.—No. 8289L.A.—3rd July 1931.—Whereas it appears to the Governor in Council that extra land is required to be taken by Government at the public expense for a public purpose, viz., for constructing road approaches of head sluice and for depositing surplus earth between chainages 2,800 feet and 2,888 feet of the Branch Canal in connection with the Damodar Canal Project, in the villages of Golgram and Bansujipur, jurisdiction list Nos. 132 and 137, respectively, in thana Galsi, pargana Burdwan, district Burdwan, it is hereby declared that for the above

purpose four pieces of land altogether measuring, more or less, 0·43 of an acre, bounded on the—

Block A:

North—By the lands of Akshya Kumar Shaha and Manohardas Mohanta,

East—By the lands of Manohardas Mohanta and Irrigation Department,

South—By the land of Irrigation Department acquired for main canal,

West—By the lands of Akshya Kumar Shaha and Irrigation Department,

Block B:

North—By the lands of Irrigation Department and Rash Behari Shaha and Shyamapada Dutta,

East—By the lands of Shyamapada Dutta and Girish Chandra Dey,

South and West—By the land Irrigation Department,

Block C:

North—By the lands of the East Indian Railway and Irrigation Department,

East—By the lands of Hari Bhusan Kesh and Manindra Chandra Bhattacharjee,

South—By the land of Manindra Chandra Bhattacherjee,

West—By the land of Irrigation Department,

Block D:

North—By the lands of the East Indian Railway and Hari Bhusan Kesh,

East—By the lands of Irrigation Department and East Indian Railway,

South—By the lands of Manindra Chandra Bhattacherjee and Irrigation Department,

West—By the lands of Manindra Chandra Bhattacherjee and Hari Bhusan Kesh,

are required within the aforesaid villages of Golgram and Bansujipur.

This declaration is made, under the provisions of section 6 of Act I of 1894, to all whom it may concern.

A plan of the land may be inspected in the office of the Special Land Acquisition Officer, Burdwan, as well as in that of the Executive Engineer, Damodar Canal Division, Burdwan.

Dacca.—No. 8335L.A. — 4th July 1931.—Whereas it appears to the Governor in Council that land is required to be taken by Government at the expense of the Dacca Municipality for a public purpose, viz., for the construction of a dumping depot and for opening a Mehtors' passage at Atashkhana Lane, in the mahalla of Atashkhana Road, pargana Jahangirnagar, zilla Dacca, it is hereby declared that for the above purpose a piece of land measuring more or less, 0·0190 of an acre and comprising part of cadastral survey plot No. 57, is required within the aforesaid mahalla of Atashkhana Road.

This declaration is made, under the provisions of section 6, Act I of 1894, to all whom it may concern.

A plan of the land may be inspected in the office of the Collector of Dacca.

Darjeeling.—No. 8344L.A.—6th July 1931.—Whereas it appears to the Governor in Council that land is required to be taken by Government at the expense of the Darjeeling Improvement Fund for a public purpose, viz., for the construction by the Darjeeling district board of a drain from the Mahananda river in the Kholaising Buktari Jote, mauza Dabgram, pargana Baikanthapur, thana Siliguri, district Darjeeling, it is hereby declared that for the above purpose two pieces of land altogether measuring, more or less, 1·15 acres, bounded on the—

Block No. 1:

North and South—By land of Sabitri Dasi, wife of Upendra Nath Das, Bimal Chandra Mittra, and Chandra Mohan Roy,

East—By Public Works Department land,

West—By Eastern Bengal Railway land,

Block No. 2:

North and South—By land of Sabitri Sundari Dasi, wife of Upendra Nath Das, and Bimal Chandra Mittra,

East—By Eastern Bengal Railway land,

West—By Mahananda River,

are required within the aforesaid Jote of Kholai Buktari.

This declaration is made, under the provisions of section 6, Act I of 1894, to all whom it may concern.

A plan of the land may be inspected in the office of Deputy Commissioner of Darjeeling.

24-Parganas. — No. 8347L.A. — 6th July 1931.—Whereas it appears to the Governor in Council that land is required to be taken by Government at the public expense for a public purpose, viz., for the construction of proposed retired line in 157th mile of 24-Parganas Embankment, in the village of Purba Gabberia, jurisdiction list No. 80, thana Joynagore, pargana Maida, zilla 24-Parganas, it is hereby declared that for the above purpose a piece of land measuring, more or less, 3·8264 acres, comprising cadastral survey plots Nos. 1429, 1430 and portions of cadastral survey plots Nos. 1428, 1427, 1431, 1432, 1433, 1434, 1435, 1436, 1437 and 1462, is required within the aforesaid village of Purba Gabberia.

This declaration is made, under the provisions of section 6, Act I of 1894, to all whom it may concern.

A plan of the land may be inspected in the office of the Executive Engineer, Canals Division, as well as in that of the Special Land Acquisition Officer, Alipore.

Birbhum.—No. 8436L.A.—6th July 1931.—Whereas it appears to the Governor in Council that land is required to be taken by Government at the public expense for a public purpose, viz., for the distributary No. 2 of the Bakreswar Canal, in the villages of Rajchandrapur *alias* Ramchandrapur, Sukdevpur and Kamardangal *alias* Kamardanga, jurisdiction list Nos. 188, 190 and 144, respectively, in thanas Dubrajpur and Suri, parganas Jainujal and Alinagar, district Birbhum, it is hereby declared that for the

above purpose a piece of land comprising portions of cadastral plots Nos. 1129, 1128, 1127, 1126, 1125, 1122, 1120, 1110, 1109, 1108, 1107, 644, 643, 632, 631, 596, 597, 592, 591, 590, 582, 581, 566, 565, 564, 562, 553, 550, 548, 419, 418, 417, 416, 396, 395, 394, 393, 392, 391 and 390, of mauza Rajchandrapur *alias* Ramchandrapur, portions of plots Nos. 3, 6, 7, 12, 14, 15, 16, 18, 20, 21, 22, 23, 25, 172, 173, 174, 175, 176, 177, 178, 179, 180, 181 and 1174 of mauza Sukdevpur and portions of plot No. 1000 of mauza Kamardangal *alias* Kamardanga and measuring, more or less, 4·02 acres, is required within the aforesaid villages of Rajchandrapur *alias* Ramchandrapur, Sukdevpur and Kamardangal *alias* Kamardanga.

This declaration is made, under the provisions of section 6, Act I of 1894, to all whom it may concern.

A plan of the land may be inspected in the office of the Collector of Birbhum.

Forests.

NOTIFICATION.

Chittagong.—No. 8224For.—2nd July 1931. —In exercise of the powers conferred by section 20 of the Indian Forest Act, 1927 (Act XVI of 1927), the Governor in Council declares that the area comprised in the revisional survey plots specified in the schedule below is reserved forest to be called the Charamba Reserved forest with effect from the 1st September 1931. The total area is 290·22 acres:—

Schedule.

District Chittagong, thana Satkania.

Mauza with J. L. No.	Revisional survey plots.	Area in acres.
Charamba, J. L. No. 83.	6589, ৭528, 6722, 6723, ৭34, ৭24, ৭33, ৭23, ৭22, ৭38 and ৭21.	290·22

Excluded Area.

NOTIFICATION.

Darjeeling.—No. 715T.R.—26th June 1931. —The Subdivisional Officer, Public Works Department, Kurseong, is appointed to be an *ex-officio* member of the Kurseong Municipality, *vice* the Reverend William W. Ferrie, resigned.

H. C. V. PHILPOT,
Secy. to the Govt. of Bengal.

IRRIGATION DEPARTMENT.

Establishment.

NOTIFICATION.

No. 16.—27th June 1931.—In exercise of the power conferred by sub-paragraph (*b*) of paragraph (*ii*) against item 11 in Schedule III to the Bengal Provincial Services Recruitment Rules published under the Appointment Department notification No. 7183A., dated 22nd May 1930, the Government of Bengal in the Irrigation Department are pleased to declare, for the purpose of direct appointment to the Bengal Engineering Service (Irrigation), the degrees or diplomas mentioned below to be equivalent to the degree in Engineering of the Calcutta University:—

(*i*) the Engineering certificate of the Thomason Civil Engineering College, Roorkee; or

(*ii*) the certificate of having passed Parts A and B of the Associate Membership examination of the Institution of Engineers (India); or

(*iii*) a degree of having passed one of the Indian examinations mentioned in Schedule I; or

(*iv*) an Engineering degree of one of the Universities mentioned in Schedule II under the conditions mentioned in that Schedule; or

(*v*) the certificate of having passed Sections A and B of the Associate Membership examination of the Institution of Civil Engineers; or

(*vi*) the certificate of having passed the Associateship examination of the City and Guilds Institute (Imperial College of Science and Technology, South Kensington) in Engineering.

Schedule I.

Final examination leading up to the following degrees:—

B.E. of Bombay University.
B.E. of Madras University.
B.Sc. (Engineering), Benares Hindu University.

Schedule II.

Oxford—B.A., with Honours in the Engineering Science Final Honours School.

Cambridge—B.A., with Honours in Mechanical Science Tripos, or Ordinary degree (B.A.) in Engineering, provided the graduate has passed in the principal subjects, Engineering I, Engineering II, and Engineering III.

St. Andrews—B.Sc. in Engineering (Honours or Ordinary degree).

Glasgow—B.Sc. in Civil Engineering (Honours or Ordinary degree).

Edinburgh—B.Sc. in Engineering (Honours or Ordinary degree).

Dublin—B.A.I. (Ordinary or with Honours in Engineering).

Durham—B.Sc. in Civil Engineering (Honours or Ordinary degree).

London—B.Sc. (Internal degree) in Engineering, Ordinary or with Honours [not including the B.Sc. in Engineering (Mining) or the B.Sc. in Engineering (Metallurgy)]. The External degree is also accepted to the same extent, provided it is recognised by the Institution of Civil Engineers as exempting from Sections A and B of the A.M.I.C.E. examination.

Victoria University (Manchester)—B.Sc. in Engineering (Honours degree or Ordinary degree obtained in and after 1920).

Birmingham—B.Sc. in Civil Engineering (Honours or Ordinary degree).

Liverpool—B. Eng. in Civil Engineering (Honours or Ordinary degree).

Leeds—B.Sc. in Civil Engineering (Honours or Ordinary degree).

Sheffield—B. Eng. in Civil Engineering (Honours degree or Ordinary degree with a First class in the Final examination). A First class in the Final examination will not be required in the cases of degree obtained in or after June 1930.

Bristol—B.Sc. in Civil Engineering (Honours or Ordinary degree).

University of Wales—B.Sc. in Civil Engineering.

National University of Ireland—B.E.

Queen's University, Belfast—B.Sc. in Engineering.

Aberdeen—B.Sc. in Engineering (Honours or Ordinary degree).

NOTE.—The above degrees will be accepted only if taken after three years' study and the passing of the regular examination in the several examinations in the several Universities. The conditions as to three years' study will not, however, apply to Indians who, having taken an Indian degree, which exempts them from part of the University course, shall have taken one of the above degrees in less than three years in accordance with the regulations of the University concerned.

H. C. V. PHILPOT,

Secy. to the Govt. of Bengal.

LEGISLATIVE DEPARTMENT.

NOTIFICATION.

No. 1952L.—6th July, 1931.—It is hereby notified, in pursuance of rule 14 (*9*) of the Bengal Electoral Rules, that the candidates mentioned in the first column of the Schedule appended to this notification have been declared under rule 14 (*2*) of the aforesaid rules to have been duly elected by the constituencies mentioned in the second column of that Schedule to be members of the Bengal Legislative Council:—

Schedule.

Names of candidates declared to be elected.	Constituency for which the candidate has been elected.
Mr. E. C. Benthall ..	Bengal Chamber of Commerce.
Mr. H. Birkmyre ..	Ditto.
Khan Bahadur Muhammad Abdul Mumin ..	Noakhali East (Muhammadan).
Mr. A. S. Macalister ..	Indian Tea Association.

J. BARTLEY,

Secy. to the Bengal Legis. Council.

TREASURY NOTICES.

Orders by the Deputy Accountant-General, Bengal.

The Treasury, 22nd June 1931.

It is notified that the refund order book No. 1673 of blue colour, containing 50 vouchers, is in use by the Income-Tax Officer, Military Circle, Meerut, with effect from the 17th June 1931.

The Treasury, 30th June 1931.

It is notified that the refund order book No. 71 bearing the Nos. 1—50 (both inclusive) is in use by the Income-Tax Officer, Railway and Miscellaneous Salaries Circle, Calcutta, from 24th June 1931. Colour of the voucher "Pink."

K. R. RAMA AYYAR,

Dy. Accountant-General, Bengal.

HIGH COURT NOTICE.

English Department—Civil.

The 2nd July 1931

No. 8596E.—The following rule amending the Rules as to the qualifications, admission and certificates, etc., of Pleaders in courts subordinate to the High Court having been made by the High Court of Judicature at Fort William in Bengal, under section 6 of the Legal Practitioners Act, 1879 (XVIII of 1879), is published for general information:—

Rule.

(Civil.)

I. *Insert* the words "or has passed the examination qualifying himself for obtaining such degree" after the words "Benares Hindu University" in line 5, clause (*b*) of Rule 2, Chapter XI (revised), Volume I of the Court's General Rules and Circular Orders (Civil).

II. *Cancel* the words "along with" in line 6, clause (*1*) of Rule 2, *ibid* and *substitute* therefor the following "and the certificates shall be forwarded by the District Judge to the Registrar of the High Court, Appellate Side, either along with or in continuation of."

III. *Insert* the following below Rule 13 *ibid*:—

"Provided that a person who desires to be admitted as a Pleader may apply as aforesaid to the High Court for such admission not earlier than two months before the date on which the period of his probation is due to be completed."

IV. *Insert* the following at the end of Rule 15:—

"Provided that an applicant for admission as a Pleader shall not be admitted to practise as such until the receipt of the certificates prescribed by sub-rule (*1*) of Rule 2."

V. *Cancel* Rule 24 *ibid* and *substitute* therefor the following:—

"24. (*a*) If any person having obtained the degree entitling him to be enrolled as a probationer in accordance with Rule 2, or the certificate entitling him to be admitted and enrolled as a Mukhtar, shall fail to apply for such enrolment as a probationer or as a Mukhtar, as the case may be, for a period of one year from the date of his diploma or certificate, he shall not be enrolled unless, by special order of the High Court, the time for such application be extended.

(*b*) A person who shall fail to apply for admission and enrolment as a Pleader within one year from the date of completion of the probationary period prescribed by Rule 2 shall not be entitled to apply for such admission and enrolment unless with the special leave of the High Court."

By order of the High Court,

W. McC. SHARPE, *Registrar.*

ORDERS BY COMMISSIONERS OF DIVISIONS.

Burdwan Division—Chinsura.

No. 1957J.G.—28th June 1931.—Maulvi Saiyid Abu Nasir Muhammad Ali Akbar, Sub-Deputy Collector and Sub-Deputy Magistrate, on probation, Hooghly, is allowed leave on average pay for one month, under rule 81 (*b*) (*ii*) of the Fundamental Rules, with effect from the 26th June 1931, or from any subsequent date on which he may avail himself of it.

No. 917M.—29th June 1931.—It is hereby notified for general information that, under rule 20 (*b*) of the rules for the management of charitable hospitals and dispensaries in Bengal, the following gentlemen have been appointed to be members of the committee for the management of the charitable dispensary at Baidyabati in the district of Hooghly:—

The Chairman of the Baidyabati Municipality.
The Vice-Chairman of the Baidyabati Municipality.
Babu Anil Bandhab Mukherjee.
Babu Ramrich Pal Agarwala.
Babu Tulsi Charan De.
Babu Ashutosh Singha.
Babu Chandi Charan Kundu.
Babu Bejoy Basanta Banarjee.
Babu Aswini Kumar Banarjee.
Babu Balaram Chandra Singha.
Babu Gopal Chandra Gupta.
Babu Monoranjan Sen.

No. 1985J.G.—30th June 1931.—Babu Saroj Behari De, Sub-Deputy Collector, on probation, Birbhum, is allowed leave on average pay for one month, on medical certificate, under rule 81 (*b*) (*ii*) of the Fundamental Rules, with effect from the 15th June 1931.

No. 1989J.G.—1st July 1931.—The orders of the 12th June 1931, posting Maulvi Abdul Karim (II), Sub-Deputy Collector, to the district of Midnapore as Circle Officer, Pingla, are cancelled.

No. 1995J.G. — 2nd July 1931.—Maulvi Ibrahim Ali Khan, Sub-Deputy Collector and Sub-Deputy Magistrate, on leave, is posted to the district of Midnapore for employment as Circle Officer, Pingla, *vice* Babu Asit Kumar Biswas.

No. 1294L.S.-G.—3rd July 1931.—It is hereby notified for general information that, under section 19 (*l*) of the Bengal Local Self-Government Act (Bengal Act III of 1885), Babu Charu Chandra Roy has been duly elected to be a member of the Midnapore district board by the Ghatal local board in the district of Midnapore, in place of Babu Mohini Mohan Das, removed under section 18A of the Act.

No. 2005J.G. — 4th July 1931. — Babu Kalipada Das Gupta, Sub-Deputy Collector, posted to this division under Government notification No. 5111A., dated the 30th June 1931, is posted to the headquarters station of the district of Burdwan on general duty.

No. 2010J.G.—4th July 1931.—Maulvi Abul Khair Quazi Makim-ud-din Ahmad, Sub-Deputy Collector and Sub-Deputy Magistrate, on probation, Burdwan, is transferred to the Contai subdivision in the district of Midnapore for employment as Circle Officer, Bhagwanpore, *vice* Babu Sailesh Chandra Chaterji.

No. 2015J.G.—4th July 1931.—The orders of the 28th June 1931, granting one month's leave to Maulvi Saiyed Abu Nasir Muhammad Ali Akbar, Sub-Deputy Collector, on probation, Hooghly, are cancelled.

L. B. BURROWS, *Commissioner (offg.).*

Birbhum, the 25th June 1931.

No. 4L.S.-G.—It is hereby notified for general information that, under section 13 of the Bengal Village Self-Government Act, 1919 (Bengal Act V of 1919), read with rule 35 of the rules for the election and appointment of members of union board, etc., Babu Gopendra Narayan Mallik has been duly elected to be a member for Ward No. II of the Supur union board in police-station Bolpur in the Sadar subdivision of the district of Birbhum, *vice* Babu Norendra Lal Mondal, deceased.

G. S. DUTT, *District Magistrate.*

Chittagong Division—Chittagong.

No. 2445G.—27th June 1931.—Babu Upendra Kumar Mitra, Sub-Deputy Collector and Khas Mahal Officer, Noakhali, is allowed leave on average pay for fifteen days, under rule 81 (*b*) (*ii*) of the Fundamental Rules, with effect from the 5th June 1931.

No. 2450G.—27th June 1931.—Babu Nagendra Nath Dewan, Sub-Deputy Collector, Chittagong, is allowed leave on average pay for twelve days, under rule 81 (*b*) (*ii*) of the Fundamental Rules, with effect from the 11th June 1931, or any subsequent date on which he avails himself of the leave.

No. 2527G.—4th July 1931.—Maulvi Nuruddin Ahmad, Sub-Deputy Collector and Circle Officer, Feni, in the district of Noakhali, is allowed leave on average pay for six weeks, under rule 81 (*b*) (*ii*) of the Fundamental Rules, with effect from the 17th June 1931.

W. H. NELSON, *Commissioner.*

Dacca Division—Dacca.

No. 3386J.—27th June 1931.—It is hereby notified for general information that, under section 13 of the Bengal Village Self-Government Act, 1919 (Bengal Act V of 1919), Babu Umesh Chandra De has been appointed by the District Magistrate of Mymensingh to be a member of Chandpur union board in Katiadi police-station in the Kishoreganj subdivision of the Mymensingh district, *vice* Babu Banka Behari Dutta, resigned.

Corrigenda.—No. 3406J.—29th June 1931. —In this office notification No. 586J., dated the 11th May 1931, publishing the names of the elected and appointed members of the Baira union board in police-station Singair in the Manikganj subdivision of the Dacca district, at page 573 of Part I of the *Calcutta Gazette*, dated the 14th idem, *for* "Sheik Raizuddin Ahmed" *read* 'Sheik Riazuddin Ahmed" and *for* "Rai Sahib Nripendra Kumar Roy" *read* "Rai Sahib Nripendra Mohan Roy."

No. 3414J.—30th June 1931.—Babu Jogendra Chandra Banarji, Sub-Deputy Collector and Circle Officer, North Circle, Narayanganj, in the district of Dacca, is appointed to be Circle Officer of South Circle, Narayanganj.

No. 3418J.—30th June 1931.—Maulvi Abdur Rahim (No. II), Sub-Deputy Collector and Circle Officer, Narayanganj, South Circle, in the district of Dacca, is appointed to be Circle Officer of North Circle, Narayanganj.

No. 3457J.—3rd July 1931.—It is hereby notified for general information that, under rule 20 (*b*) of the manual of rules for the management of charitable hospitals and dispensaries in Bengal, the following gentlemen are appointed to be members of the committee for the management of the charitable dispensary at Pingna in the Jamalpur subdivision of the district of Mymensingh:—

The Subdivisional Officer, Jamalpur (*ex-officio*).
Babu Sasi Mohan Choudhuri.
Maulvi Md. Yasin Ali.
Maulvi Md. Ismail.
Babu Sailesh Chandra Mukherjee.
Dr. Joynal Abedin Talukdar, M.B.
Dr. Narendra Mohan Saha.
Maulvi Md. Abdul Gaffar.
Munshi Amiruddin.
Munshi Abdul Hassan Talukdar.

No. 3497J.—4th July 1931.—Babu Ashutosh Das Gupta, Sub-Deputy Collector and Circle Officer, Orakandi Circle, in the district of Faridpur, is allowed leave on average pay for six weeks, under rule 81 (*b*) (*ii*) of the Fundamental Rules, with effect from the date on which he may be relieved.

No. 3501J.—4th July 1931.—Babu Gopi Krishna Bagchi, Sub-Deputy Collector, Gopalganj, in the district of Faridpur, is appointed to be Circle Officer of Orakandi Circle in that district.

No. 3197J.—6th July 1931.—It is hereby notified for general information that—

(*a*) Under sub-section (*2*) of section 6 of the Bengal Village Self-Government Act, 1919 (Bengal Act V of 1919), the following gentlemen have been duly elected to be members of the Uchitpura union board in police-station Gopaldi in the Narayanganj subdivision of the Dacca district:—

Munshi Sayed Ali Sarkar.
Munshi Elahi Baksh Molla.
Babu Bharat Chandra Das.
Munshi Khalil-ur Rahaman Bhuiya.
Babu Ram Kumar Roy.
Maulvi Muhammad Idris Bhuiya.

(*b*) Under sub-section (*3*) of section 6 of the Act, the following gentlemen have been appointed by the District Magistrate of Dacca to be members of the said union board:—

Babu Umesh Chandra Chakravarty.
Babu Benode Kumar Roy.
Munshi Abbas Khan.

No. 3198J.—6th July 1931.—It is hereby notified for general information that—

(*a*) Under sub-section (*2*) of section 6 of the Bengal Village Self-Government Act, 1919 (Bengal Act V of 1919), the following gentlemen have been duly elected to be members of the Nagari union board in police-station Rupganj in the Narayanganj subdivision of the Dacca district:—

Mr. Francis Dons.
Babu Bishwambar Chakravarty.
Babu Hem Chandra Ghosh.
Mr. Babu De Rozario.
Babu Suresh Chandra Banik.
Maulvi Rukanuddin Ahammad.

(*b*) Under sub-section (*3*) of section 6 of the Act, the following gentlemen have been appointed by the District Magistrate of Dacca to be members of the said union board:—

Babu Ramani Mohan Chowdhury.
Dewan Mahammed Ali.
Mr. Vincent Pereira.

No. 3199J.—6th July 1931.—It is hereby notified for general information that—

(*a*) Under sub-section (*2*) of section 6 of the Bengal Village Self-Government Act, 1919 (Bengal Act V of 1919), the following gentlemen have been duly elected to be members of the Bholabo union board in police-station Rupganj in the Narayanganj subdivision of the Dacca district:—

Munshi Ibrahim Sarkar.
Babu Mahendra Chandra Chakravarty.
Munshi Rahim Baksh.
Munshi Moktar Hossain.
Munshi Fayezuddin Bhuiya.
Munshi Altabuddin Kazi.

(*b*) Under sub-section (*3*) of section 6 of the Act, the following gentlemen have been appointed by the District Magistrate of Dacca to be members of the said union board:—

Babu Chandra Kishore Pal.
Babu Nibaran Chandra Malakar.
Munshi Panchu Sarkar *alias* Munshi Abdul Goffur.

A. CASSELLS, *Commissioner (offg.)*.

Barisal, the 29th June 1931.

It is hereby notified for general information that, under section 13 of the Bengal Village Self-Government Act (Bengal Act V of 1919), the following gentlemen have been duly elected to be members of the undermentioned union boards in the Pirojpur subdivision of the Bakarganj district:—

Pirojpur police-station.

Umedpur-Parerhat union board.

Babu Nagendra Nath Bose, *vice* Babu Surja Prasanna Bajpai, resigned.
Munshi Mahamed Cheragali, *vice* Haji Gaisuddin Talukdar, resigned.

Sariktala-Dumuritala union board.

Babu Khirode Chandra Basu, *vice* Babu Nagarbashi Saha, deceased.

Bamna police-station.

Bukabunia union board.

Munshi Mozahar Ali Molla, *vice* Hazi Jamal Molla, deceased.

Kaukhali police-station.

Amrajuri union board.

Babu Abhoy Charan Mridha, *vice* Babu Raj Kumar Majhi, deceased.

2. Under the aforesaid section of the said Act the following gentlemen have been appointed by the District Magistrate of Bakarganj to be members of the union boards named below:—

Nazirpur police-station.

Nailtala union board.

Munshi Hasemali Choudhury, *vice* Munshi Jabedali Howladar, deceased.

Bamna police-station.

Bukabunia union board.

Hazi Ali Akabbar, *vice* Akabbar Ali, deceased.

[ILLEGIBLE],
for *Magistrate of Bakarganj*.

Presidency Division—Calcutta.

No. 1100R.G.—29th June 1931.—Babu Hemanta Kumar Kar, Sub-Deputy Collector, employed as extra Circle Officer at Jangipur, Murshidabad, is granted leave on average pay for six weeks, under rule 81 (*b*) (*ii*) of the Fundamental Rules, with effect from the date he avails himself of it.

No. 1769L.S.-G.—2nd July 1931.—It is hereby notified for general information that, under section 13 of the Bengal Village Self-Government Act, 1919 (Bengal Act V of 1919), read with rule 35 of the rules for the election and appointment of members of union boards under the said Act, Munshi Multan Hossain Biswas and Munshi Fazalla Rahaman Biswas have been duly elected to be members of Ward No. III of the Betai union board in police-station Tehatta in the Meherpur subdivision of the Nadia district, in places of Haji Hurmatulla and Munshi Moazzam Hossain, deceased.

No. 1772L.S.-G.—2nd July 1931.—It is hereby notified for general information that, under section 13 of the Bengal Village Self-Government Act, 1919 (Bengal Act V of 1919), read with rule 36 of the rules for the election and appointment of members of union boards under the said Act, Munshi Imajuddin Mandal has been appointed by the District Magistrate of Nadia to be a member of the Palsunda union board in police-station Tehatta in the Meherpur subdivision of the Nadia district, in place of Munshi Khepa Chand Mandal, deceased.

F. W. ROBERTSON, *Commissioner (offg.)*.

Rajshahi Division—Jalpaiguri.

No. 2365J.—29th June 1931.—It is hereby notified for general information that under rule 20 (*b*) of the rules for the management of hospitals and dispensaries under the supervision of the Government of Bengal, the following gentlemen have been appointed to be the members of the committee for the management of the following charitable dispensaries in the district of Rangpur:—

Kurigram Dispensary.

Subdivisional Officer, Kurigram (*ex-officio*).
Medical Officer-in-charge, Kurigram (*ex-officio*).
Senior Munsif (*ex-officio*).
President, Kurigram union board (*ex-officio*).
Rai Sahib Jogesh Chandra Roy.
Babu Protap Chandra Roy.
Babu Gopal Lal Shaha Banik.
Maulvi Dalal Uddin Ahmed.
Khan Sahib Khaim Uddin Choudhury.

Fulbari Dispensary.

Subdivisional Officer, Kurigram (*ex-officio*).
Circle Officer, Lalmonirhat (*ex-officio*).
President, Simulbari union board (*ex-officio*).
President, Nowdanga union board (*ex-officio*).
President, Fulbari union board (*ex-officio*).
President, Barabhita union board (*ex-officio*).
Babu Sailendra Nath Mukherjee.
Babu Benodeswar Das.
Babu Chandra Mohan Biswas.

Chilmari Dispensary.

Subdivisional Officer, Kurigram (*ex-officio*).
Circle Officer, Ulipur Circle (*ex-officio*).
Babu Suresh Chandra Moulik.
Babu Satyendra Nath Mukherjee.
Babu Kunja Lal Ganguli.
Maulvi Atik Ullah Sarkar.
Maulvi Joyen Uddin Sarkar.
Dr. Ekram Uddin Mondal.
Babu Bherudan Bothra.

Bhurungamari Dispensary.

Subdivisional Officer, Kurigram (*ex-officio*).
Circle Officer, Lalmonirhat (*ex-officio*).
Sub-Postmaster, Bhurungamari (*ex-officio*).
Babu Banamali Adhikari.
Babu Shyam Lal Shaha.
Babu Sewji Ram Chapra.
Munshi Taher Uddin Sarkar
Munshi Taher Uddin Tarafdar.
Babu Amulya Bhusan Sen Gupta.

Nilphamari Dispensary.

Subdivisional Officer, Nilphamari (*ex-officio*).
Circle Officer, Nilphamari (*ex-officio*).
Sub-Registrar, Nilphamari (*ex-officio*).
Medical Officer, Nilphamari (*ex-officio*).
Babu Hara Lal Ghosh.
Maulvi Kasiruddin Ahmed.
Babu Hara Nath Biswas.
Babu Biseswar Gupta.
Maulvi Abdul Gaffur.

Domar Dispensary.

Circle Officer, Domar (*ex-officio*).
Sub-Registrar, Domar (*ex-officio*).
Stationmaster (*ex-officio*).
Babu Sarat Chandra Kar.
Babu Dhirendra Nath Bhattacharjee.
Babu Hiranya Kumar Roy.
Babu Surajmal Surana.
Babu Mirjamal Manikchand.
Maulvi Haji Masratulla Sarkar.

Kishoreganj Dispensary.

Sub-Inspector of Police (*ex-officio*).
Sub-Registrar (*ex-officio*)
Babu Kali Pada Bhattacharjee.
Babu Trailakshya Nath Misra.
Babu Janaki Nath Kundu.
Munshi Alimuddin Sarkar.
Babu Bhikam Chand Oswal.
Munshi Hayat Mohammad Shah.
Munshi Komoruddin Sarkar.

Jaldhaka Dispensary.

Maulvi Jasimuddin Chaudhury.
Babu Keshab Lal Ghosh.
Maulvi Fazlul Karim.
Maulvi Asiruddin Ahmed.
Babu Sewlal Maheswri.
Sub-Inspector of Schools (*ex-officio*).
Sub-Registrar (*ex-officio*).
Circle Officer, Domar (*ex-officio*).
Sub-Inspector of Police (*ex-officio*).

Haripur Dispensary.

Munshi Abdulla Sarkar.
Babu Dinesh Chandra Sarkar
Babu Chandmal Bothra.
Babu Manindra Chandra Chaki.
Munshi Gayeshuddin Akanda.
Munshi Hemayet Hossain Khan.
Babu Purna Chandra Mohanta.
Munshi Muhammad Viksu Bepari.
Munshi Fazaluddin Sarkar.

Kamarjani Dispensary.

Babu Bijoy Gobinda Nag.
Babu Khulada Kumar Sen Roy.
Babu Pran Gopal Banerjee.
Babu Todarmal Oswal.
Babu Beni Nath Saha.
Munshi Moyezuddin Sarkar.
Munshi Muhammad Samashuddin Ahmed.
Munshi Mobarak Ali.
Postmaster, Kamarjani (*ex-officio*).

Mohimaganj Dispensary.

Babu Nibaran Chandra Mukherjee.
Babu Sarat Kumar Munshi.
Babu Karunasindhu Haldar.
Babu Jogendra Nath Ghosh.
Babu Aditya Nath Biswas.
Babu Indra Chand Maheswri.
Munshi Imarali Akanda.
Munshi Mazahar Ali Sha Fakir.
Munshi Nayebulla Soner.

Naldanga Dispensary.

Babu Promatha Nath Moitra.
Babu Suresh Nath Moitra.
Babu Jadu Nath Roy.
Babu Chautmal Maheswri.
Munshi Arifullah Sarkar.
Munshi Chand Muhammad Sarkar.
Postmaster, Naldanga (*ex-officio*).
Babu Purna Chandra Ghosh.
Babu Girish Chandra Ghosh.

Palashbari Dispensary.

Babu Nibaran Chandra Mukherjee.
Mirza Nasimuddin Ahmed.
Maulvi Moklesar Rahaman Choudhury.
Muhammad Azizar Rahaman.
Munshi Kafiluddin Sarkar.
Munshi Genda Muhammad.
Munshi Kaderali Sarkar.
Kazi Mohfuzar Rahaman.
Munshi Ali Namaz Choudhuri.

Shaghatta Dispensary.

Officer-in-charge, Shaghatta police-station (*ex-officio*).
Babu Rajani Kanta Sarkar.
Munshi Safatulla Mandal.
Munshi Safatulla Sarkar.
Munshi Etarat Hossain Choudhuri.
Munshi Jahiruddin Mandal.
Babu Haripada Sarkar.
Babu Rakhal Chandra Shaha.
Babu Rajani Kanta Sarkar.

Sadullapur Dispensary.

Sub-Registrar, Sadullapur (*ex-officio*).
Officer-in-charge, Sadullapur police-station (*ex-officio*).
Head Master, Sadullapur High English School (*ex-officio*).
Maulvi Azimuddin Khan.
Munshi Asiruddin Sarkar.
Munshi Ismail Hossain Mia.
Babu Bherudan Oswal.
Babu Harsha Nath Chakravarty.
Munshi Jahiruddin Ahmed.

Sundarganj Dispensary.

Babu Girija Nath Bhattacharjee.
Babu Mangal Chand Sethia.
Munshi Abdul Khaleq Mandal
Munshi Luthfar Rahaman.
Sub-Registrar, Sundarganj (*ex-officio*).
Sub-Inspector-in-charge, Sundarganj police-station (*ex-officio*).
Babu Hem Chandra Ghosh.
Munshi Amanuddin Bepari.
Munshi Baseruddin Pramanik.

Dharampur Dispensary.

Subdivisional Officer, Gaibandha (*ex-officio*).
Muhammad Hakimuddin.
Muhammad Gafuruddin Dakua.
Babu Nagendra Nath Ray.
Munshi Masir Uddin Talukdar.
Munshi Muhammad Khalilur Rahaman.
Babu Narendra Nath Singha Ray.
Babu Nibaran Chandra Barma.
Babu Tarak Nath Shaha.

No. 2402M.—4th July 1931.—In partial supersession of this office notification No. 4449-M., dated the 20th December 1930, it is hereby notified for general information that the general election of the Commissioners in Ward E of the Dinajpur Municipality, in the district of Dinajpur, having been set aside by the Civil Court a fresh poll will be held on Monday, the 27th July 1931, to elect Commissioners for that ward.

J. G. DRUMMOND, *Commissioner (offg.)*.

Rangpur, the 27th June 1931.

No. 3748J.—It is hereby notified for general information that, under section 13 of the Bengal Village Self-Government Act, 1919 (Bengal Act V of 1919), Babu Lankeswar Barma has been duly elected to be a member of Nageswari union board, police-station Nageswari, in the Kurigram subdivision of the district of Rangpur, *vice* Babu Purna Chandra Bepari, deceased.

Rangpur, the 2nd July 1931.

No. 3828J.—It is hereby notified for general information that, under section 13 of the Bengal Village Self-Government Act, 1919 (Bengal Act V of 1919), Munshi Meajan Pramanik has been appointed as a member of Gopinathpur union board in police-station Badarganj in Sadar subdivision of Rangpur district, *vice* Haji Nazar Uddin Pramanik, resigned.

No. 3831J.—It is hereby notified for general information that, under section 13 of the Bengal Village Self-Government Act, 1919 (Bengal Act V of 1919), Munshi Deanatulla Basunia has been duly elected to be a member of Thetrai union board in police-station Ulipur in Kurigram subdivision of the district of Rangpur, *vice* Babu Ban Behari Sarker, deceased.

T. M. Dow, *District Magistrate*.

The Calcutta Gazette

THURSDAY, JULY 9, 1931.

Part I A

Orders and Notifications by the Government of India republished for general information.

HOME DEPARTMENT.

NOTIFICATION.

PUBLIC.

Simla, the 22nd June 1931.

No. F.-9/7/30.—*Corrigendum.* — In the Home Department Notification No. F.-9/7/30-Public, dated the 2nd September 1930 relating to an addition to the schedule of officers entitled to wear civil uniform, *for* "item IV (5)" *read* "item IV (7)."

S. N. ROY,
Joint Secy. to the Govt. of India (offg.).

RAILWAY DEPARTMENT.

(Railway Board.)

NOTIFICATION.

Simla, the 10th of June 1931.

No. 7455-F.—In column 1 of Schedules I and II annexed to the Government of India, Railway Department, notification No. 7455-F., dated 16th March 1931, specifying union rate payable in aid of certain local authorities by the administration of the Eastern Bengal Railway, please read "Rajganj," for the word "Raniganj," and delete all entries against "Kalchini" police-station appearing in column 1 of Schedule II thereof.

J. F. BLACKWOOD,
Secy., Railway Board.

The Calcutta Gazette

THURSDAY, JULY 9, 1931.

Part IB

Educational Notices.

University of Dacca.

Ramna, Dacca, the 22nd April 1931.

Admission for the session 1931-32 in the Faculties of Arts (including Commerce), Science and Law will commence on 1st July 1931. Students of this University and all recognised Universities and Intermediate Boards will be admitted till the 21st July 1931. Students of the Calcutta University will be admitted till the 21st July or the 21st day after the publication of their results in *Calcutta Gazette*, whichever is later. After these dates admissions will be made during a further period of fifteen days with a delay fine at Re. 1 per diem. Class fees for undergraduate students (other than those reading for Honours in Physics or Chemistry) and Law students Rs. 8 per mensem; for undergraduate students reading for Honours in Physics or Chemistry, for M.A. students and for M.Sc. students in Mathematics Rs 10 per mensem; for M.Sc. students in Physics and Chemistry Rs. 12 per mensem. Seat rent in halls from Rs. 2 to Rs. 4 and total minimum cost of tuition and living from Rs. 22 to Rs. 25 a month. The University has up-to-date laboratories (including an Experimental Psychology Laboratory), an excellent library, and an organised tutorial system. It possesses splendid residential facilities and strong students' unions, and offers exceptional opportunities for athletics.

(2) The residence for women students is very close to the University buildings and is adequately furnished. Intending candidates for admission to the residence are advised to apply as early as possible.

(3) A pamphlet of general information relating to the staff, courses, scholarships, stipends and other matters will be sent post-free on application to the Registrar.

N. AHMAD, *Registrar.*

Government Commercial Institute.

11, Hastings Street, Calcutta, the 15th May 1931.

Regular Day Classes—10-30 a.m. to 3-30 p.m. (Two Years' Course).

Subjects taught—(*a*) Modern English (including methods and machinery of business); (*b*) Commercial Geography; (*c*) Commercial and Mental Arithmetic; (*d*) Book-keeping; (*e*) Commercial Bengali.

Optionals—Shorthand and Typewriting.

Six scholarships available: three of Rs. 12 per month in the First Year and three of Rs. 20 per month in the Second Year Day classes.

The Matriculates of the Calcutta University on their passing the Institute's Final Day Course Examination are allowed to join the B.A. and B. Com. classes by the University.

(A) For the Institute of Banker's Examination—

(*a*) Modern English; (*b*) Economics and Economic Geography; (*c*) Banking and Foreign Exchange.

(B) For the Government Diploma in Accountancy Examination (G. D. A.)

(C) For the Institute's Special Examinations in—

(*a*) Junior and Advanced Book-keeping.
(*b*) Shorthand (Theory and Speed).
(*c*) Typewriting.

(D) For the Railway and Government Competitive and Departmental Examinations in important subjects.

New session commences on the 22nd June 1931. Apply with one anna stamp or personally to

M. K. GHOSH, *Principal.*

Presidency Division.

NOTIFICATION.

Calcutta, the 13th June 1931.

Nomination of candidates for inclusion in the provincial panel in connection with the recruitment of English teachers in Government High and 1st Grade Training Schools and Madrasahs and Sub-Inspectors of Schools in the scale of Rs. 75-5-150 (efficiency bar)-5-200 in the Subordinate Educational Service will be made by the Panel Committee of the Presidency Division in August 1931. Applications (in duplicate) in the annexed form will be received by the Inspector of Schools, Presidency Division, up to the 31st July 1931.

1. The posts to which recruitment will be made and the qualifications required for them are shown below:—

(*a*) English teachers in Government High and 1st Grade Training Schools and Madrasahs—B.A. or B.Sc., preferably with Honours of a recognised University with a degree in teaching, or first class M.A. or M.Sc.

(*b*) Sub-Inspectors of Schools—In addition to the above qualifications teaching experience of a satisfactory nature for not less than two years in recognised secondary schools.

(*c*) Special Sub-Inspectors of Schools—B.A., preferably with Honours in Arabic or Persian with a degree in teaching, or first class M.A. in Arabic or Persian. Teaching experience of a satisfactory nature of not less than two years in recognised secondary schools.

2. No person shall be appointed as an English teacher or a Sub-Inspector of Schools who is not of good character and in all respects suitable for appointment to Government service.

3. Every candidate shall furnish certificates written not more than one year prior to the date of application from two responsible persons unconnected with his College or University, and not related to him, testifying to his private character.

4. No person shall be eligible for appointment who is not of sound health, good physique, and active habits and free from organic defect or bodily infirmity and in respect of whom the department is not satisfied that he is physically fit and in all respects suitable for appointment to Government service.

5. No person shall be eligible for appointment who has endeavoured to enlist for his candidature the support of persons of influence or of officials of Government. Spontaneous recommendations from persons interested in or otherwise known to the candidate shall be disregarded.

6. No person shall be considered for admission to the panel, by the Panel Committee of the Presidency Division, unless he is a permanent resident or permanently domiciled within the jurisdiction of the Presidency Division including Calcutta.

7. Candidates shall be under the age of 25 years. This condition may be relaxed by the Director of Public Instruction, Bengal, in the case of teachers who have worked satisfactorily for not less than two years in recognised High Schools under private management up to the age of 30 years. No candidate who is age-barred under this rule shall be admitted to the panel, and if previously admitted a candidate shall have his name removed from the panel on his attaining the age of 30 years or on permanent appointment before that age.

8. No candidate shall apply simultaneously to more than one Inspector of Schools. Every candidate should state definitely if he has applied for nomination by any other Divisional Committee.

9. Every candidate should enclose with his application documents in support of his statement regarding (1) qualifications, academic and professional (M.A., B.A., M.Sc., B.Sc., B.T. diplomas), (2) date of birth (Matriculation certificate), (3) home district (certificate from a gazetted officer), (4) character (certificate from a respectable gentleman), (5) subjects studied at the degree examination, both academic and professional (certificate from the Principal of the College in which he studied) and (6) details of teaching experience with dates and names of institutions (certificates from the authorities of the schools). Testimonials, if any, as to the candidate's ability as lecturer, teacher, etc., may also be produced.

10. Every candidate should state if he is a British subject; if not, he should name the State in India to which he belongs.

11. A person can have only one domicile. In case a candidate claims to have more than one place of residence he should clearly state which one is his legal residence. This should be supported by documentary evidence (certificate from a gazetted officer).

12. The Divisional Panel Committee will interview the candidates, if necessary. The date for the purpose will be communicated to them in due course.

K. N. MITRA,

Inspector of Schools, Presidency Division.

Education Department.

Form of application for appointment to posts of English Teachers and Sub-Inspectors of Schools in the scale of Rs. 75-5-150 (efficiency bar)-5-200 in the Subordinate Educational Service.

1. Name of applicant and present address (in full).

2. Permanent address in full.

3. Date of birth and age last birthday.

4. Place of birth and permanent residence.

5. Nationality at birth, religion and caste.

6. Father's name, place of birth and nationality at birth.

7. Father's address and profession (if dead, give address at date of death).

8. Mother's place of birth and nationality at birth.

9. Name of school last attended before entering University, giving address with dates of entering and leaving.

10. Name of University and College. Give the dates of entering and leaving, and dates of passing examinations. State subjects studied, degrees, honours or prizes obtained and the class and position in the class obtained at all University and other public examinations.

11. Name of the Training College attended. Give year and class of the B.T. degree and the subjects in which you specialised during training.

12. Give details of any original work. If published, copies of the publications should be attached.

13. Give details of any teaching experience with dates and names of institutions. Any testimonials as to your ability as a lecturer, teacher, etc., should be attached.

14. Give names of games played—

(*a*) at school,

(*b*) at college, and

(*c*) after leaving the college.

State whether you have had experience in organising games.

15. State whether you are a trained Scout Master. If so, what troops you have been in charge of and where.

16. Name two persons of position (with address in full) who can, if necessary, testify to your character, and to accuracy of your statements.

17. If time since leaving school is not fully accounted for by replies given above, account for the remainder here with dates.

18. (*a*) Are you free from pecuniary embarrassments?

(*b*) If you are under liability to repay money advanced by an institution or party for your education, state the particulars.

19. Have you ever been pronounced unfit at any time for Government employment by the Medical Board, or any other duly constituted medical authority in Bengal? What serious illness have you suffered from since leaving school?

20. Have you appeared at any examination for Government service? If so, state when and for what appointment. With what result?

21. Have you previously been rejected for any appointment in Government service? If so, when and for what reason?

22. Are you willing to be appointed to any post temporarily vacant?

23. Indicate the class of post you prefer, *i.e.*, an English teachership or Sub-Inspectorship or both.

24. State here any facts not recorded above which should be mentioned as supporting your suitability for appointment

Signature———————————

Date———————————

Krishnagar College—Session 1931-1932.

Krishnagar, the 13th May 1931.

The College reopens on the 13th July after the long vacation. Admissions will commence immediately after the publication of the results in the *Calcutta Gazette*. The College teaches up to the B.A. and B.Sc. standard of the Calcutta University. It has got affiliation in the usual Arts and Science subjects and in Honours in English, Sanskrit and Mathematics. The monthly tuition fee amounts to Rs. 6 for the I.A., Rs. 7 for the I.Sc. and B.A. and Rs. 8 for the B.Sc. Classes.

The College is situated in the midst of an extensive compound of over 100 bighas, containing a large number of playing fields. There is provision for all outdoor and indoor games. The College provides well-appointed common and reading rooms for the use of the students, who receive individual attention both in their studies and their games. There is a fine new two-storeyed Hindu hostel in the college compound, and hostel charges (including rent, furniture, light and medical attendance) do not exceed Rs. 14 a month. The boarders keep excellent health, and the general health of the town is also now quite good. There is also a Muhammadan hostel attached to the College.

A considerable number of Government and private free-studentships and stipends is awarded every year in August or September to poor but deserving students of the College.

For Prospectus and Admission form, apply, enclosing stamped and addressed envelope, to the Professor-in-charge, Krishnagar College.

P. C. BANERJI, *Professor in charge.*

Admission to the Compounders Class, Lytton Medical School, Mymensingh, Session 1931-32.

Mymensingh, the 10th June 1931.

Applications for admission into the Compounders Class, Lytton Medical School, Mymensingh, with copies of (*a*) University certificate and (*b*) certificate of character from a Deputy Magistrate or any gentleman of equal rank or from the Head Master or Principal of the School or College in which the candidate last studied will be received by this office up to the 10th July 1931. None need apply who has not passed the Matriculation Examination of a recognised University.

All the candidates are required to appear personally before the Superintendent with their original certificates on the 24th July 1931 at 10 a.m. for selection.

NOTE.—Every student who is selected for admission shall pay an entrance fee of Rs. 4 and first half-yearly instalment of Rs. 12 tuition fee. He shall also pay the amount of sports and athletic club fee of Rs. 2.

S. J. V. FOX, MAJOR, I.M.D.,
Supdt., Lytton Medical School, Mymensingh.

Admission of students in the Compounders Class of the Ronaldshay Medical School, Burdwan.

Burdwan, the 15th June 1931.

Applications for admission into the Compounders Class with copies of certificates of (1) having passed the Matriculation Examination or its equivalent, (2) certificates of character from a Magistrate or Head Master or Principal of the School or College in which the candidate last studied, (3) certificate of age (candidates must not be under 16 years on the date of admission) will be received in the office of the Superintendent of the School up to the 10th July 1931.

Late and incomplete applications will not be considered.

The candidates will have to appear before the Superintendent in the school office on the 25th July 1931 at 11 a.m. for selection. Selected candidates shall join and pay all fees on the 1st August 1931, otherwise their names will be removed from the list and new candidates from the waiting list will be taken in their places.

B. H. SINGH, MAJOR, I.M.S.,
Supdt., Ronaldshay Medical School, Burdwan.

Admission to the Compounder Class, Dacca Medical School—Session 1931-32.

Dacca, the 16th June 1931.

APPLICATIONS for admission to the Compounder Class of the Dacca Medical School will be received not later than 10th July 1931.

Applications should be supported by (*a*) a true copy of certificate of passing Matriculation or its accepted equivalent examination, (*b*) a testimonial of good moral character from a Deputy Magistrate, or a gentleman of equal position or from the Principal or from the Head Master of the College or School in which the candidate last studied, (*c*) a certificate of age—Matriculation certificate or a certificate from the Head of the Institution in which the candidate last studied will also be accepted as evidence of age.

Applications from the candidates must reach the office of the Superintendent not later than 10th July 1931 for registration of their names and they must attend for personal interview on the 26th July 1931 together with the original certificates.

Late or incomplete applications will not be entertained.

N.B.—Every male student who is selected for admission shall pay an entrance fee of Rs. 4 and first half-yearly instalment of Rs. 12 tuition fee. He shall also pay the sports and athletic club fee of Rs. 2.

C. R. O'BRIEN, LT.-COL., I.M.S.,
Supdt., Dacca Medical School.

Accountancy Diploma Board, Bombay.

Bombay, the 27th June 1931.

The undermentioned 105 candidates have been declared by the Board to have passed the Government Diploma Examination in Accountancy held in March 1931 :—

Bombay Centre.

(Passes in alphabetical order)

Register No.

Bathiboi's Accountancy Training Institute, Bombay.

2 Abhyankar, Govind Shridhar.

Davar's College of Commerce, Bombay.

3 Ananta Rao, Medepalli.

Private.

6 Bahulkar, Shridhar Daji.
13 Bhagwat, Raghunath Bhaskar.

Bathiboi's Accountancy Training Institute, Bombay.

16 Bhatt, Maganlal Lallubhai.

Private.

17 Bhole, Vithal Pundlik.

Bathiboi's Accountancy Training Institute, Bombay

23 Charna, Bapu Manchershaw.

Sydenham College of Commerce and Economics, Bombay.

27 Cooper, Adarji Nowroji.

Bathiboi's Accountancy Training Institute, Bombay.

29 Dastur, Dara Nusservanji.
31 Dave, Vishnukant Shambhulal.
41 Dholabhai, Kanchanlal Dashrathlal.

Private.

45 Dordi, Phiroz Ardeshir.

Bathiboi's Accountancy Training Institute, Bombay.

46 D'Souza, Longino Victor.
50 Fernandes, Antony Joseph.

Private.

54 Gadre, Keshav Shankar
56 Gangadharasastry, Seringapatam A.

Bathiboi's Accountancy Training Institute, Bombay.

57 Ghaisas, Hari Narayan

Davar's College of Commerce, Bombay.

69 Joshi, Ramchandra Trimbak.

Bathiboi's Accountancy Training Institute, Bombay.

70 Kamat, Devadatta Keshao
74 Kapadia, Manek Nasarwanji.

Private.

78 Khumbatta, Temurasp Dinshaw.

Bathiboi's Accountancy Training Institute, Bombay.

80 Kothari, Khodidas Dosabhai.

Private.

81 Kothari, Natvarlal Chhotalal.

Register No.

Bathiboi's Accountancy Training Institute, Bombay.

82 Kotnis, Dwarkanath Ramchandra
85 Kulkarni, Uddhav Hanmant
93 Mehendale, Bhaskar Anant
94 Mehta, Bhagvatlal Vemlal
98 Mistri, Ardheshir Cawasji
106 Nagarwalla, Rustam, H E
107 Naik, Maganlal Gulabbhai

The Punjab Commercial Institute, Delhi.

109 Naik, Sujeer Pushotham.

Bathiboi's Accountancy Training Institute, Bombay

111 Narayana Murty, Bhagavatula Bh.

Sydenham College of Commerce and Economics, Bombay.

115 Ohri, Surrendar Nath
122 Parekh, Hasmukhlal Thakordas.

Bathiboi's Accountancy Training Institute, Bombay.

124 Parikh, Shantilal Ranchhodlal
125 Patel, Haribhai Ashabhai

Davar's College of Commerce, Bombay.

128 Patel, Bithalbhai Somabhai

Sydenham College of Commerce and Economics, Bombay.

130 Patwardhan, Mukund Krishna

Davar's College of Commerce, Bombay.

141 Ramachandra Rao, Venkata S B

Private.

142 Ramakrishnan, R.

Bathiboi's Accountancy Training Institute, Bombay.

144 Ranganatha Rao, V.

Private

152 Saha, Gopal Chandra

Bathiboi's Accountancy Training Institute, Bombay.

153 Sakhardande, Moreshwar Anandrao.

Private.

154 Sama Rao, R
159 Shah, Chhotalal Harivallabhdas

Bathiboi's Accountancy Training Institute, Bombay.

162 Shah, Khimji Kunverji.

Private

163 Shah, Kanhaiyalal Nathubhai.

Bathiboi's Accountancy Training Institute, Bombay

166 Shende, Shirdhar Purushottam

Private.

168 Shroff, Minocheher Dosabhai.
174 Subbaraman, S.

Sydenham College of Commerce and Economics, Bombay

175 Subrahmanya, Dharwar Subravati

Private.

176 Surti, Jehangir Dhunjibhoy.

Sydenham College of Commerce and Economics, Bombay

180 Talekar, Keshav Narahari.

Calcutta Centre.

Private.

Register No.

218 Chatterji, Ramesh Chandra.
234 Datta, Indubhushan.

The Government Commercial Institute, Calcutta.

237 Datta, Surendra Nath

Bathiboi's Accountancy Training Institute, Bombay.

242 Ghosh, Jyotis Chandra.

Private.

243 Ghosh, Nirmalyaratan
250 Krishnamurti, T. S.
257 Mazumdar, Satis Chandra.

The Government Commercial Institute, Calcutta.

268 Mukhopadhyay, Sasadhar.

Private.

271 Narasimham, Prabhala.

The Government Commercial Institute, Calcutta.

274 Paul, Chandrakanta

Bathiboi's Accountancy Training Institute, Bombay.

280 Roychowdhury, Kumar Chandra.
284 Sen, Barendramohan.

Karachi Centre.

Private.

294 Aneja, Salig Ram.

Coronation Commercial College, Karachi.

297 Gohani, Jethanand Chataram.
300 Jagasia, Vishindas Rughumal.
302 Khalsa, Mohansingh Sunderasingh.
306 Mantakhani, Jethmal Vassanmal.
311 Parekh, Vadilal Manilal.
314 Relan, Balkishen.
315 Sharma, Achharchand Nilkanth.

Private.

318 Vaswani, Arjandas Chandumal.

Coronation Commercial College, Karachi.

319 Wadhwani, Dayaram Pribhdas.

Allahabad Centre.

Davar's College of Commerce, Bombay.

326 Mathur, Gopi Nath.

Rangoon Centre.

Joseph's College, Rangoon.

330 Chakko, Puthenpureal Ninan.

The Government of Burma Accountancy Institute, Rangoon.

342 Nathan, Satyamangalam Venkataramana Rama.
344 Natarajan, Krishnaswami.

Register No.

Joseph's College, Rangoon.

345 Pal, Anil Madhab.

Bathiboi's Accountancy Training Institute, Bombay.

346 Radhakrishnan, C. V.

Joseph's College, Rangoon.

351 Srinivasa Pillay, M.
353 Thangavelu, S.

The Government of Burma Accountancy Institute, Rangoon.

356 Venu, Gouravaram.

Madras Centre.

The Government Institute of Commerce, Madras.

361 Carron, Leonard Francis.

Private.

364 Dattu Rao, Puranic S.
366 Ganapathy, Nilakanta Aiyar.
368 Gopala Menon, T.
370 Hariharan, Kulathwaiyar.

The Government Institute of Commerce, Madras.

371 Harsha-Vardhanan Adipudi.

Private.

374 Krishna Ayyar, N.

Bathiboi's Accountancy Training Institute, Bombay.

376 Krishnamachar, Sreerangachar.

The Government Institute of Commerce, Madras.

378 Krishnamurthy, Subramania.
381 Kuppusamy, Velamakanni.

Private.

382 Lakshman Rau, Yellore.
387 Manjeshwar, Dattatraya Rao.
396 Narayanan, P. S.

The Government Institute of Commerce, Madras.

403 Ramachandra, A. Narayana.
417 Samuel, T. G.

Private.

428 Sreenivasan, Nallan Chakravarthy.

The Government Institute of Commerce, Madras.

445 Umanath Rao, Adige.

Private.

447 Venkatachalam Ayyar, Kulathuaiyar.
449 Venkataraman, Subbuswamy.

The Government Institute of Commerce, Madras.

450 Venkataraman, Viswanata.

Bathiboi's Accountancy Training Institute, Bombay.

454 Viswanathan, E. D.

M. L. TANNAN, I.E.S.,

Secretary, Accountancy Diploma Board, Bombay.

Chittagong Division.

Chittagong, the 27th June 1931.

Rules for the guidance of private candidates for the Matriculation Examination of 1932.

The following rules for the guidance of private candidates for the Matriculation Examination are published for general information

2. Private students are those who have not attended any recognised or unrecognised school for at least one year previous to the examination. The term "private students" includes *bona-fide* school-masters.

3. Private students must appear at the Test Examination of one of the following institutions on the dates mentioned below:—

Comilla Zilla School, Noakhali R. K. Zilla School, Chittagong Collegiate School and Ranganati High English School.

Date of examination—7th, 8th, 9th, 10th and 11th December 1931.

Female candidates are not required to undergo any Test Examination.

Each private student will pay a fee of Rs. 5 to the head of the institution in which he appears for the Test Examination. No private student will be admitted to the Test Examination unless he is accompanied for the purpose of identification by some person known to the headmaster of the institution in which he appears.

4. Application for permission to appear at the Test Examination must be sent in time so as to reach this office not later than the 15th November 1931. The information to be given and the documents to be appended, in original, are the following:—

(*a*) Name of the school in which the candidate last studied.

(*b*) Transfer certificate, in original, granted to the candidate by the headmaster of the school in which he last studied; or

(*c*) In the case of a candidate who previously appeared at the Matriculation Examination, Controller's receipt, in original, for the fee paid.

(*d*) Age of the candidate. No candidate, who will not have completed the age of 15 years on the first day of the Matriculation Examination, will be allowed to appear at it.

(*e*) In the case of school-masters, a certificate of good conduct from the secretary of the school in which he is serving or from the Inspector of the district or subdivision concerned.

(*f*) A certificate from a respectable gentleman to the effect that the candidate has prosecuted a regular course of study and has been subject to proper discipline and that he has not read in any school since the last Matriculation Examination.

(*g*) A statement by the candidate giving the following facts:—

(i) Residence.
(ii) Father's name.
(iii) Second language besides English.
(iv) Vernacular language for composition.
(v) Vernacular language from which translation is to be made into English in the first English paper.

(vi) Which of the following subjects he has taken up:—

(1) Additional mathematics.
(2) Additional paper in the classical language.
(3) History.
(4) Geography.
(5) Elementary mechanics.

(vii) The name of the school at the Test Examination of which the candidate wishes to appear must be stated. Candidates of the plains districts will not be allowed to appear at the Test Examination of the Rangamati High English School.

N.B.—A student who failed to pass or appear at the annual examination for promotion to class X at the end of the session 1930 and then left the school can, under no circumstances, be allowed to appear at the Test Examination.

5. The Inspector on being satisfied will countersign and return the application, which will then be the candidate's passport for admission to the Test Examination.

6. Every candidate must deposit his fee for the Test Examination with the headmaster of the institution in which he intends to appear, at least 15 days before the date of that examination. The headmaster will deposit the amount realized by him into the local Treasury and forward a copy of the Treasury chalan to this office. He should also submit to this office an account of the charges incurred by him (including remuneration to examiners) for conducting the examination of private candidates, together with vouchers in support of the charges, on receipt of which the Director of Public Instruction will be moved to sanction the expenditure.

7. The headmasters of the institutions named in paragraph 3 above should direct private students who satisfy the test to appear before them in due time, with their applications for admission to the Matriculation Examination, and to sign them in their presence. They will then grant the necessary certificate and forward the applications to the Inspector for countersignature, after which they will be sent by the Inspector direct to the candidates.

8. In no circumstances should the fee for the Matriculation Examination be sent to the Inspector's office. It should be sent to the Controller of Examinations, Calcutta University, by the candidates themselves, together with the countersigned applications.

9. Private students must understand that the Test Examination of any school other than those named above will not be accepted by the Inspector.

10. The Matriculation Examination will be held in March 1932, the exact dates of which will be notified by the University.

11. Applications and fees for admission to the Matriculation Examination must reach the office of the Controller of Examinations on or before the date to be fixed by the University.

KAMALUDDIN AHMAD,
Inspr. of Schools, Chittagong Division (offg.).

	Khandakar Abdul Ala	.. Non-collegiate student (Comilla Victoria College).
	Sen, Kamala	.. Diocesan College.
	Sengupta, Bela	.. Non-collegiate student (Cooch-Behar Victoria College).
150	Marcon, D. V	.. St. Edmund's College.
151	Chattopadhyay, Gaurchand (S)	.. City College
	,, Panchanan	.. Vidyasagar College
	Das, Rajmohan	.. Scottish Church College.
	Majumdar, Radhabinod	.. Krishnagar College.
155	Maiti, Lakshmikanta (S)	.. Midnapur College.
156	Gangopadhyay, Girijaprasanna	.. Barisal Brajamohan College.
157	Mukhopadhyay, Hrishikes	.. Serampur College.
	Ray, Manindranath (S)	.. Midnapur College.
	,, Sushilchandra	.. Berhampur Krishnath College
160	Chaudhuri, Sudhirchandra	.. Scottish Church College.
	Ray, Asokkumar	.. Presidency College.
162	Basu, Suprabha	.. Bethune College.
	Chakrabarti Usharanjan	.. Scottish Church College.
"	Dan, Hariprasad	.. Ditto.
	Das, Sudhirkumar	.. Ripon College.
	De, Amarendranath	.. Mymensingh A. M. College.
	Gupta, Kapilkumar	.. Scottish Church College.
	Muhammad Siddique Ali	.. Sylhet M C. College
169	Dasgupta, Binapani, II (L)	.. Bethune College.
170	,, Smarajitkumar	.. Scottish Church College.
171	Bhattacharyya, Pasupati	.. Non-collegiate student (Vidyasagar College).
172	Biswas, Banamali	.. Narail Victoria College.
	Chaudhuri, Haridas	.. Vidyasagar College
	Datta, Surama	.. Bethune College.
175	Bhattacharyya, Debsankar	.. Hughli College
	Shahedar Rohaman	.. Rangpur Carmichael College
177	Pal, Sabitaranjan	.. Non-collegiate student (Vidyasagar College).
178	Basak, Anilkrishna	.. Scottish Church College.
	Ray, Tarakdas	.. Hughli College.
180	Bandyopadhyay, Rajkumar	.. Presidency College.
	De, Surendrakumar	.. Feni College.
182	Dasgupta, Binapani, I	.. Bethune College.
	Ray, Bhupendrabhushan	.. Asutosh College.
184	Bandyopadhyay, Haridas	.. City College.
	De, Nagendranath, II	.. Bagerhat College.
	Ghosh, Rabindranath (S)	.. Karatia Saadat College
	Mohanta, Radharaman	.. Comilla Victoria College.
188	Ghosh, Manilal	.. Ripon College.
	Sen, Narayandas (S)	.. Scottish Church College.
190	Adham, Sarah H.	.. Non-collegiate student (Loreto House).
	Dasgupta, Ushasi	.. Scottish Church College.
	Mitra, Debprasad	.. Vidyasagar College.
	Lahiri, Debiprasad (S)	.. Scottish Church College.
194	Abul Barkat Mufti Fakhoruddin Ahmed	.. Sylhet M C. College.
	Chattopadhyay, Sukhamay (S)	.. Bankura Wesleyan College.
196	Abdur Rauf Khondaker	.. Comilla Victoria College.
197	Bandyopadhyay, Hiranmay	.. Scottish Church College.
	Kushal Singh Kothari	.. Vidyasagar College
199	Bhattacharyya, Purnendukumar	.. Non-collegiate student (Daulatpur Hindu Academy).
	Sculthorp, K	.. Non-collegiate student (Loreto House).
201	Datta, Gopalchandra	.. Non-collegiate student (Presidency College).
	Majumdar, Kalipada	.. Faridpur Rajendra College.
	Sen, Amulyakumar	.. St. Paul's College.
204	Bhattacharyya, Manindrachandra	.. Mymensingh A. M. College.
	Curlender, Grace	.. Non-collegiate student (Loreto House).
	Datta, Manibhushan	.. Non-collegiate student (Comilla Victoria College).
	De, Gopalkrishna	.. Scottish Church College.
	Gangopadhyay, Jnanranjan	.. Barisal Brajamohan College.
	Palit, Phanindramohan	.. Sylhet M. C. College.
	Raychaudhuri, Binaybhushan	.. Mymensingh A M College
211	Bhattacharyya, Phanibhushan	.. Sanskrit College.
	Ray, Kshitischandra	.. Non-collegiate student (Bagerhat College)
213	Bhattacharyya, Sasankasekhar	.. Chittagong College.
214	Chattopadhyay, Prasaddas	.. Vidyasagar College.
	Datta, Prita	.. Diocesan College.
	Mukhopadhyay, Harigopal	.. Ripon College.
217	Gaurishankar Daruka (V)	.. Presidency College.
218	Bandyopadhyay, Bimalchandra	.. Burdwan Raj College.
	Bhattacharyya, Kalipada	.. Presidency College
	Chaudhuri, Bhabendrachandra	.. Gauhati Cotton College.
	Sarma, Narendrachandra	.. Ditto.
222	Chakrabarti, Kanakchandra	.. Cooch-Behar Victoria College.
	De, Sailendrakumar	.. Scottish Church College.
224	Gangopadhyay, Achalanath	.. Presidency College.
	Mitra, Haricharan	.. Rangpur Carmichael College.
	Oinam Thambal Singh	.. Sylhet M. C. College
	Sen, Lokendrachandra	.. St. Paul's College
	Tofazzal Hossain Mian	.. Faridpur Rajendra College.

229	Ghosh, Kalidas	..	Berhampur Krishnath College.
	,, Smritibikas	..	Presidency College.
	Samson Singh	..	Gauhati Cotton College.
232	Bandyopadhyay, Gosthabihari	..	Serampur College.
	Sen, Dibyendumohan	..	Non-collegiate student (Vidyasagar College).
	Syed Abdus Salam	..	Islamia College.
235	Bhattacharyya, Sukumar (S)	..	Non-collegiate student (Scottish Church College).
	Dasgupta, Hunansulal	..	Non-collegiate student (Barisal Brajamohan College).
237	Abdus Salam	..	Barisal Brajamohan College.
	Mallik, Prabhansukumar	..	Presidency College.
	Mukhopadhyay, Bimalapati	..	Scottish Church College.
	Shaikh Abdul Latif	..	Karatia Saadat College.
241	Chaudhuri, Usharani	..	Sylhet M. C. College.
	Majumdar, Birendramohan	..	Non-collegiate student (Rajshahi College).
	Sen, Satyaranjan	..	Asutosh College.
244	Ray, Manindrachandra	..	Non-collegiate student (Rajshahi College).
	Sengupta, Amiya	..	Bethune College.
246	Bhattacharyya, Hiran	..	Scottish Church College.
	,, Siddheswar	..	Hughli College.
	Biswas, Upendralal	..	Chittagong College.
249	Bertram Wilfred Saldanha	..	Non-collegiate student (St Xavier's College).
250	Nath, Chandrakanta	..	Barisal Brajamohan College.
251	Cleur, Hazel	..	Non-collegiate student (Loreto House).
	Md. Janab Ali	..	Feni College.
	Mitra, Bibhutibhushan	..	Non-collegiate student (Scottish Church College).
	Saha, Nityananda	..	Karatia Saadat College.
255	Dasgupta, Susila	..	Bethune College.
256	Das, Basantakumar	..	Sylhet M. C. College.
	Goswami, Bibhutibhushan	..	Scottish Church College.
	Sarkar, Jogeschandra	..	Rangpur Carmichael College.
	Shamsur Rahman Mollah	..	Non-collegiate student (Ripon College).
260	Bandyopadhyay, Badrinarayan	..	Presidency College.
	Bhattacharyya, Balaram	..	Ripon College.
	,, Bhabeschandra (S)	..	Sanskrit College.
	Misra, Satyeswar	..	Ditto.
	Mitra, Dhirendranath	..	Scottish Church College.
265	Saha, Bijaykrishna	..	Burdwan Raj College.
266	Bhattacharyya, Anantakumar	..	Rangpur Carmichael College.
	Chakrabarti, Chittaranjan	..	Asutosh College.
	Gupta, Kanadkumar	..	Scottish Church College.
	Sengupta, Bijaya	..	Ditto.
270	Bhattacharyya, Panchugopal	..	Barisal Brajamohan College.
	Chattopadhyay, Gobardhan	..	Scottish Church College.
	Kazi Md. Azim	..	Islamia College.
	Maitra, Bhabapati (S)	..	St. Paul's College.
274	Bandyopadhyay, Nilratan	..	Presidency College.
	Chakrabarti, Kshitischandra	..	Non-collegiate student (Rangpur Carmichael College).
	Lahiri, Tulsidas	..	Vidyasagar College.
	Sen, Kesabkrishna	..	Scottish Church College.
278	Guha, Pratibha	..	Non-collegiate student (City College).
279	Ghosh, Prakriti	..	Non-collegiate student (Asutosh College).
	Debiram Godhania	..	Non-collegiate student (Rajshahi College).
	Poddar, Manmathanath	..	Ripon College.
282	Das, Abinaschandra	..	Non-collegiate student (Roll Cal. N. 334).
	Ghosh, Gopikamohan	..	Berhampur Krishnath College.
	Mitra, Khagendranath	..	St. Paul's College.
285	Ghosh, Rampanchanan	..	Serampur College.
	Majumdar, Suroschandra	..	Mymensingh A. M. College.
	Md. Abdur Rauf	..	Non-collegiate student (Rangpur Carmichael College).
288	Chattopadhyay, Praphullakumar	..	Sanskrit College.
	Mukhopadhyay, Pankajananda	..	Presidency College.
	Ray, Anilchandra	..	Scottish Church College.
291	Datta, Sachindranath	..	Burdwan Raj College.
	Mitra, Sudhansukumar	..	Presidency College.
	Pal, Ambujaksha	..	Berhampur Krishnath College.
	Pan, Ramanath	..	Bankura Wesleyan College.
	Sarkar, Snehalata	..	Non-collegiate student (Mymensingh A. M. College).
	Satpati, Rasbihari	..	Burdwan Raj College.
297	Chakrabarti, Hemendrachandra	..	Cooch-Behar Victoria College.
	Dasarma, Sakhanath	..	City College.
	Kundu, Bhabaranjan	..	Narail Victoria College.
	Ray, Sailajakinkar	..	Burdwan Raj College.
301	Mukhopadhyay, Kshetragopal	..	Ditto.
	Sen, Santikana	..	Barisal Brajamohan College.
303	Bhattacharyya, Krishnadas	..	Bagerhat College.
	Datta, Jagatbandhu	..	Scottish Church College.
	Lahiri, Asutosh	..	Rangpur Carmichael College.

	Pal, Prankrishna	.. Vidyasagar College.
	Maung Tun U	.. Non-collegiate student (Roll Cal. N. 320).
	Sarkar, Harendrakumar	.. Vidyasagar College.
309	Basu, Gopaldas	.. Serampur College.
	Bhattacharyya, Bhawanicharan	.. Cooch-Behar Victoria College.
	Chakrabarti, Nareschandra (S)	.. Non-collegiate student (Ripon College).
	Chaudhuri, Hrishikes (S)	.. Scottish Church College.
313	Chakrabarti, Biswesswar	.. Barisal Brajamohan College.
	Dhar, Ramendranarayan	.. Presidency College.
	Majumdar, Binaykumar	.. Gauhati Cotton College.
	Pal, Gorakshanath	.. Non-collegiate student (Rajshahi College).
	Syed Shahed Ullah	.. Non-collegiate student (Burdwan Raj College).
318	Barthakur, Kamakhyacharan	.. Gauhati Cotton College.
	Chakrabarti, Kiranmay	.. Faridpur Rajendra College.
	„ Kshirodranjan	.. Non-collegiate student (Burdwan Raj College).
	Ghosh, Ratikanta	.. Ripon College.
	„ Parbaticharan	.. Vidyasagar College.
	Sengupta, Amulyakumar	.. Barisal Brajamohan College.
324	Bandyopadhyay, Pramodchandra	.. Scottish Church College.
	Das, Gauripriya	.. Bethune College.
	Mahammad Hossain Shaikh	.. Berhampur Krishnath College.
	Mitra, Sulekha	.. Non-collegiate student (Roll Cal. F. N. 63).
	Sengupta, Pramathanath	.. Non-collegiate student (Barisal Brajamohan College).
329	Bhattacharyya, Tarapada	.. Non-collegiate student (Cooch-Behar Victoria College).
	Fayekazzaman	.. Bagerhat College.
	Khabiruddin Ahmad	.. Gauhati Cotton College.
	Mukhopadhyay, Kamalkrishna	.. Serampur College.
333	Chattopadhyay, Sibaprasad	.. City College.
	Chaudhuri, Sukumar	.. Presidency College.
	William A. Ferris	.. Non-collegiate student (St. Xavier's College).
	Mukhopadhyay, Aparnaprasad	.. Non-collegiate student (Krishnagar College).
	Samanta, Subodhkrishna	.. Non-collegiate student (Burdwan Raj College).
338	Basu, Sukharanjan	.. Comilla Victoria College.
	Chakrabarti, Dhirendralal	.. Rangpur Carmichael College.
	Kabasi, Sachindranath	.. Vidyasagar College.
341	Chakrabarti, Bimalakanta	.. Bankura Wesleyan College.
	Das, Girijakanta	.. Sylhet M. C. College.
	Pan, Sailajasekhar	.. Scottish Church College.
344	Bandyopadhyay, Chintaharan	.. Vidyasagar College.
	Chakrabarti, Satyendranath	.. Burdwan Raj College.
	Chattopadhyay, Satyapada	.. Hetampur Krishna Chandra College.
	De, Rasendrachandra	.. Sylhet M. C. College.
	Mandal, Baloram	.. Scottish Church College.
	Sahana, Bishnupada	.. Asutosh College.
350	Das, Manomohan	.. Sylhet M. C. College.
	Dasgupta, Jnanendrachandra	.. Non-collegiate student (Scottish Church College).
	Goswami, Gaurpada	.. Non-collegiate student (Mymensingh A. M. College).
	Manna, Krishnadhan	.. Scottish Church College.
	Sengupta, Binaychandra	.. Mymensingh A. M. College.
355	Basu, Annadaprasad	.. Karatia Saadat College.
	Sadhukhan, Tarakdas	.. Scottish Church College
	Sen, Sandhyarani	.. Non-collegiate student (Roll Cal. F. N. 1).
358	Basak, Surendranath	.. Non-collegiate student (Rajshahi College).
	Basil, Lena	.. Non-collegiate student (Roll Cal. F. N. 43).
	Bhattacharyya, Herambachandra	.. Uttarpara College.
	Chakrabarti, Haraprasad	.. Gauhati Cotton College.
	Mukhopadhyay, Sailendranath	.. Scottish Church College.
	Syed Anisazzaman	.. Non-collegiate student (Islamia College.
364	Imam Hussain	.. Non-collegiate student (Chittagong College).
365	Biswas, Sudhindranath	.. Non-collegiate student (Krishnagar College).
	Md. Abdul Hye (P)	.. Non-collegiate student (Roll Mym. N. 3).
	Mitra, Kamalkrishna	.. Asutosh College.
	Nathbhaumik, Sasibhushan	.. Non-collegiate student (Comilla Victoria College).
	Rudra, Rabindranath	.. Scottish Church College.
370	Bhattacharyya, Prankrishna	.. Hughli College.
	Subbarao, G. V.	.. Non-collegiate student (Roll Cal. N. 323).
	Muhammad Wais	.. City College.
	Sen, Mukul	.. Barisal Brajamohan College.
374	Bandyopadhyay, Harihar	.. Vidyasagar College.
	Bardhan, Ajitranjan (S)	.. Comilla Victoria College.
	Chanda, Bhupendrachandra	.. Mymensingh A. M. College.

	Mahanta, Chandrakanta	..	Gauhati Cotton College.
	Mitra, Niharkana	..	Non-collegiate student (Burdwan Raj College).
379	Bandyopadhyay, Santoshkumar	..	Non-collegiate student (Hughli College).
380	Bhattacharyya, Bhabatosh	..	Bagerhat College.
	Bhaumik, Tejendrakumar	..	Rangpur Carmichael College.
	Brahma, Srikumar	..	St. Xavier's College.
	Mohammad Mahmud Ali	..	Sylhet M. C. College.
	Sarkar, Anilchandra	..	Pabna Edward College.
385	Abdul Awwal	..	Chittagong College.
	Basu, Krishnagobinda	..	Scottish Church College.
	Das, Brindabanchandra	..	Non-collegiate student (Scottish Church College).
	Ghosh, Praphulla	..	Bethune College.
	Maher, R. I.	..	Non-collegiate student (St Xavier's College).
	Mukhopadhyay, Hemlal (S)	..	Vidyasagar College.
	,, Swarnakanti	..	Comilla Victoria College.
	Ray, Chinmaysundar	..	Burdwan Raj College.
	Scult, Norman Bertie	..	Non-collegiate student (Roll Cal. N. 2).
	Sharma, Sohanlall (V)	..	Vidyasagar College.
395	Abdul Quarim Choudhuri	..	Ripon College.
	Dasgupta, Nirmalkumar	..	Barisal Brajamohan College.
	Md. Abdul Hoque	..	Berhampur Krishnath College.
	Sarkar, Pratulchandra	..	Karatia Saadat College.
399	Bhattacharyya, Ramendrachandra	..	Burdwan Raj College.
	Datta, Prakaschandra	..	Non-collegiate student (Vidyasagar College).
	Debi, Induprabha	..	Non-collegiate student (Roll Cal. F. N. 16).
	Mukhopadhyay, Anandachandra	..	City College.
	Syed Arshad Ali (VP)	..	Presidency College.
404	Altaf Hussain	..	Sylhet M. C. College.
	Das, Sachindrabhushan	..	Ditto.
	Kundu, Amalananda	..	Bankura Wesleyan College.
	Mahammed Mahiuddin	..	Feni College.
	Mukhopadhyay, Ahindranath	..	Ripon College.
	,, Nirmalkumar	..	Daulatpur Hindu Academy.
	Niyogi, Sailendramohan	..	Presidency College.
411	Chakrabarti, Sakyaprasanna	..	Ripon College.
	Chattopadhyay, Anilchandra	..	Ditto.
	,, Susilchandra	..	Comilla Victoria College.
	Datta, Ajitkumar	..	Scottish Church College.
	,, Phanindranath	..	Sylhet M. C. College.
	Phukan, Dranakanta	..	Gauhati Cotton College.
417	Bhattacharyya, Sudhakrishna	..	Vidyasagar College.
	Chakrabarti, Anilchandra	..	Mymensingh A. M. College.
	,, Prabhatchandra	..	Vidyasagar College.
	Chattopadhyay, Syamlal	..	Non-collegiate student (Comilla Victoria College).
	Mitra, Indira	..	Bethune College.
422	Bhattacharyya, Byomkes	..	Hughli College.
	Chakrabarti, Jyotirmay	..	Non-collegiate student (Rajshahi College).
	Ghosh, Debaprasad	..	Non-collegiate student (Vidyasagar College).
	Mayer, Norma	..	Non-collegiate student (Loreto House).
426	Abdul Awal	..	Mymensingh A. M. College.
	Chattopadhyay, Chandicharan	..	Scottish Church College.
	Depurkayastha, Sasankakumar	..	Sylhet M. C. College.
	Mukhopadhyay, Tinkorimohan	..	Cooch-Behar Victoria College.
	Purkayastha, Kalipada	..	Comilla Victoria College).
	Sen, Jatindranath, I	..	Barisal Brajamohan College.
432	Bhaumik, Hajarikanta	..	Narail Victoria College.
	Chakrabarti, Narendramohan	..	Cooch-Behar Victoria College.
	Chattopadhyay, Rebatiraman (S)	..	Scottish Church College.
	Datta, Sudhindranarayan	..	St. Paul's College
436	Bhattacharyya, Satyendranath	..	Mymensingh A. M. College.
	Mukhopadhyay, Durgadas (C)	..	Bankura Wesleyan College.
438	Chakrabarti, Narendrachandra	..	City College.
439	Barua, Bhabendranath	..	Gauhati Cotton College.
	Chakrabarti, Nalinikanta	..	Non-collegiate student (Barisal Brajamohan College).
	,, Prabodhchandra	..	Serampur College.
	Chaudhuri, Basantakumar	..	Vidyasagar College.
	Sanyal, Praphulla Kumar	..	Cooch-Behar Victoria College.
	Madanlal, Sat	..	Vidyasagar College.
	Pal, Satindramohan	..	Ditto.
446	Chakrabarti, Jogeschandra	..	Comilla Victoria College.
	Gangopadhyay, Ramendralal	..	City College.
	Ghosh, Santimay	..	St. Xavier's College.
	Gupta, Kamala	..	Non-collegiate student (Roll Cal. F. N. 32).
	Shamsuddin Ahmed	..	Gauhati Cotton College.
451	Datta, Debaranjan	..	Barisal Brajamohan College.
	Sinha, Khagendranath	..	Daulatpur Hindu Academy.
453	Bandyopadhyay, Brajendranath	..	Scottish Church College.
	Bhaumik, Nilima	..	Non-collegiate student (Roll Cal. F. N. 2).
	Chakrabarti, Nalinikanta	..	Mymensingh A. M. College.

	Chattoraj, Kamalakanta	..	Bankura Wesleyan College.
	Gupta, Anupama	..	Barisal Brajamohan College.
	Som, Amiyakanti	..	Mymensingh A. M. College.
459	Bandyopadhyay, Sudhirchandra	..	Non-collegiate student (Rajshahi College).
	Majumdar, Sudhirchandra	..	Presidency College.
461	Chakrabarti, Bishnupada	..	Krishnagar College.
	Datta, Santoshkumar	..	Bangabasi College.
	Hom, Satyendrakumar	..	Sylhet M. C. College.
	Mukhopadhyay, Nilambar	..	Scottish Church College.
	Sinharay, Sachindrakumar	..	Krishnagar College.
466	Bhattacharyya, Sailendranath	..	Sanskrit College.
	Pal, Birendranath	..	Non-collegiate student (Roll Cal. N. 7).
	Sen, Amiyakumar	..	Mymensingh A. M. College.
	Shaikh Sekmotulla	..	Non-collegiate student (Daulatpur Hindu Academy).
	Sinha, Charuchandra	..	Ripon College.
	Unikot Achutha Menon	..	St. Paul's College.
472	Bandyopadhyay, Anadinath	..	Vidyasagar College.
	Chaudhuri, Haripada	..	Hughli College.
	Guha, Sudhirranjan	..	Barisal Brajamohan College
	Md. Nurah	..	Ditto.
	Ray, Hemkantha	..	Ripon College
477	Chakrabarti, Pulinchandra	..	Vidyasagar College.
	De, Pankajkumar	..	Ditto.
	Ghoshal, Krishnadhan	..	Scottish Church College.
	Majumdar, Sasadhar	..	Mymensingh A. M. College.
	Mitra, Birendranath	..	St. Paul's College.
	Sarkar, Janardan	..	Berhampur Krishnath College.

SECOND DIVISION.

(In alphabetical order.)

	A. B. Md. Jalal Uddin	..	Barisal Brajamohan College.
	A. B. M. Mostafizur Rahman	..	Non-collegiate student (Bangabasi College).
	A. E. Mahbuler Rahman	..	Ripon College.
	A. K. Fakhruddeen Ahmed	..	Barisal Brajamohan College.
	A. K. Mahammed Arshed Ali	..	Non-collegiate student (Roll Bar. N. 1).
	A. K. Md. Fazlul Hoque	..	Mymensingh A. M. College.
	A. K. Shamsul Huda	..	Barisal Brajamohan College.
	A. N. M. Bazlur Rashid	..	Faridpur Rajendra College.
	A. Z. M. Abdur Razzaque	..	Non-collegiate student (Rajshahi College).
10	Abdul Aziz Chowdhury	..	Chittagong College.
	Abdul Gani Talukder	..	Pabna Edward College.
	Abdul Gofur	..	Sylhet M. C. College.
	Abdul Goffur Ahmed	..	Karatia Saadat College.
	Abdul Hai	..	Feni College.
	Abdul Hamid (V)	..	Islamia College.
	Abdul Hamid Jomader	..	Barisal Brajamohan College.
	Abdul Hamid Miah	..	Karatia Saadat College.
	Abdul Jabbar	..	Sylhet M. C. College.
	Abdul Jalil Khan	..	Barisal Brajamohan College.
20	Abdul Quader	..	Burdwan Raj College.
	Abdul Quader	..	Feni College.
	Abdul Wadud	..	Sylhet M. C. College.
	Abdur Rab Choudhury	..	Ditto.
	Abdur Rashid	..	Feni College.
	Abdus Sobhan Ahmed	..	Mymensingh A. M. College.
	Abdus Subhan Chaudhury	..	Feni College.
	Abu Ahammad Abdul Latif	..	Non-collegiate student (Comilla Victoria College).
	Abual Khayer Md. Abdul Fattah	..	Faridpur Rajendra College.
	Abul Fatah Fariduddin Ahmed	..	Ripon College.
30	Abul Fazal	..	Chittagong College.
	Abul Khair Mohammad Munsiff Ali	..	Islamia College.
	Abul Mansur	..	Pabna Edward College.
	Abu Nasar Md. Yehia	..	Sylhet M. C. College.
	Abu Reza Mohamed Zahural Haque	..	Islamia College.
	Abu Syed Md. Mobarak	..	Sylhet M. C. College.
	Ada Lily Raj	..	Non-collegiate student (Roll Cal. F. N. 42).
	Adhikari, Arunchandra	..	Ripon College.
	Aditya, Sudhirchandra	..	Sylhet M. C. College.
	Ahamed Sahar Uddean	..	Rangpur Carmichael College.
40	Ahmed Ali	..	Gauhati Cotton College.
	Ajhar Uddin Ahamed	..	Bagerhat College.
	Akhlasul Kabir	..	Feni College.
	Aley Hasan	..	Islamia College.
	Allusy Bapineedu	..	Vidyasagar College.
	Anantkishore Mallick	..	Ditto.
	Araber Rahman	..	Non-collegiate student (Comilla Victoria College).
	Asgar Ali Ahmed	..	Karatia Saadat College.
	Ashraf Ahmad	..	Non-collegiate student (Ripon College).
	Azimuddin Ahmed	..	Gauhati Cotton College.

50	Babulal Kasera	..	Scottish Church College.
	Baksi, Phanindrachandra	..	Rangpur Carmichael College.
	,, Priyakumar	..	Mymensingh A. M. College
	,, Rabindraram	..	Rangpur Carmichael College.
	Bal, Jyotirindraprasad	..	Non-collegiate student (Barisal Brajamohan College).
	Bandyopadhyay, Abanikanta	..	Ditto.
	,, Ajitkrishna	..	Vidyasagar College.
	,, Amritalal	..	Ripon College
	,, Asitaranjan	..	Barisal Brajamohan College.
	,, Asutosh	..	Scottish Church College.
60	,, Atulchandra	..	Bangabasi College.
	,, Bhutnath	..	Non-collegiate student (Burdwan Raj College)
	,, Binaybhushan	..	Rangpur Carmichael College.
	,, Binaychandra	..	Bangabasi College.
	,, Bireswar	..	Scottish Church College
	,, Birkumar	..	Feni College.
	,, Chandrachur	..	Berhampur Krishnath College.
	,, Dhirendranath	..	Ditto.
	,, Gaurangasundar	..	Bankura Wesleyan College.
	,, Jamunimohan	..	Ripon College.
70	,, Kalipada	..	Asutosh College.
	,, Kunjpati	..	Howrah Narasingha Dutt College.
	,, Manoranjan	..	Faridpur Rajendra College.
	,, Nagendranath	..	Barisal Brajamohan College.
	,, Niharranjan	..	City College
	,, Pasupatiprasad	..	Krishnagar College.
	,, Patitpaban	..	Sanskrit College.
	,, Praphullachandra	..	Daulatpur Hindu Academy.
	,, Raghunath	..	St. Paul's College.
	,, Sachindra	..	Non-collegiate student (St Xavier's College).
80	,, Sailendranath	..	Non-collegiate student (Burdwan Raj College).
	,, Sanjibanchandra	..	Vidyasagar College.
	,, Saradindunarayan	..	Daulatpur Hindu Academy.
	,, Satyacharan	..	Gauhati Cotton College.
	,, Subodhkumar	..	Vidyasagar College.
	,, Sudhindranath	..	Ditto.
	,, Sudhirkumar	..	Bankura Wesleyan College.
	,, Surendranath	..	St. Xavier's College.
	Banerjee, Sarala	..	Non-collegiate student (Roll Bar. F. N. 1).
	Bardhan, Sahlchandra	..	Vidyasagar College.
90	Barma, Bhakteswar	..	Cooch-Behar Victoria College.
	,, Krishnakumar	..	Scottish Church College.
	Barman, Kalipada	..	Mymensingh A. M. College.
	Barua, Bhupatiranjan	..	Non-collegiate student (Feni College).
	,, Chandramohan	..	Serampur College
	,, Praphullakumar	..	Gauhati Cotton College.
	,, Rameschandra	..	Ditto.
	,, Ratneswar	..	Ditto.
	,, Sureschandra	..	Ditto.
	Basak, Nilima	..	Non-collegiate student (City College).
100	Basu, Anathbandhu	..	Cooch-Behar Victoria College
	,, Anilkumar, I	..	Scottish Church College.
	,, Balaichandra	..	Bangabasi College.
	,, Balaichandra	..	Burdwan Raj College.
	,, Bibhutibhushan	..	Non-collegiate student (Mymensingh A. M. College).
	,, Binaybhushan	..	Barisal Brajamohan College.
	,, Gunendranath	..	Berhampur Krishnath College.
	,, Kalidas	..	Vidyasagar College.
	,, Kalipada	..	Scottish Church College.
	,, Nikhilchandra	..	St. Paul's College
110	,, Prabhat	..	City College.
	,, Pradyotkumar	..	Asutosh College.
	,, Prankrishna	..	Vidyasagar College.
	,, Praphullakumar	..	City College.
	,, Sarojbandhu	..	Vidyasagar College.
	,, Satischandra	..	Non-collegiate student (Presidency College).
	,, Satyendranath	..	St. Xavier's College.
	,, Sudhiranjan	..	Rangpur Carmichael College.
	Basudeva Nandan	..	Non-collegiate student (Vidyasagar College).
	Basuthakur, Jogindranath	..	Scottish Church College.
120	Batabyal, Dhirendranath	..	Bankura Wesleyan College.
	Bemprasad Jhunjhunwala	..	City College.
	Bera, Surendranath	..	Contai P K College.
	Bhadra, Birendranath	..	Non-collegiate student (City College).
	Bhandari, Vidya	..	Non-collegiate student (Diocesan College).
	Bharasa, Sushilchandra	..	Ripon College.
	Bhattacharyya, Amarendranath	..	Non-collegiate student (St. Xavier's College).
	,, Amiyacharan	..	Scottish Church College.
	,, Amiyakanta	..	Non-collegiate student (Mymensingh A. M. College).
	,, Annadaprasad	..	Comilla Victoria College.

130	Bhattacharyya, Basantakumar	..	Bankura Wesleyan College.
	,, Bimalakanta	..	Non-collegiate student (Karatia Saadat College).
	,, Dhirendranath	..	Non-collegiate student (Daulatpur Hindu Academy).
	,, Dhritiachandra	..	City College.
	,, Digindranath	..	Barisal Brajamohan College.
	,, Ganeschandra	..	Non-collegiate student (Pabna Edward College).
	,, Gurudas	..	Scottish Church College.
	,, Jaladhar	..	Bangabasi College.
	,, Kenaram	..	Vidyasagar College.
	,, Narendranarayan	..	Burdwan Raj College.
140	,, Narendranath	..	Vidyasagar College.
	,, Nareschandra	..	Mymensingh A. M. College.
	,, Nripendralal	..	Non-collegiate student (Rangpur Carmichael College).
	,, Pareschandra	..	Sylhet M. C. College.
	,, Rameschandra	..	Comilla Victoria College.
	,, Rameschandra	..	Hughli College.
	,, Sachindrakumar	..	Sanskrit College.
	,, Santoshchandra	..	Mymensingh A. M. College.
	,, Satchidananda	..	Asutosh College.
	,, Satyendranath	..	Krishnagar College.
150	,, Satyabrata	..	Asutosh College.
	,, Sibchandra	..	Daulatpur Hindu Academy.
	,, Sibdas	..	Non-collegiate student (Vidyasagar College).
	,, Srigobindakumar	..	Pabna Edward College.
	,, Sripati	..	Barisal Brajamohan College.
	,, Sudhirchandra	..	Scottish Church College.
	,, Sudhirkumar	..	Berhampur Krishnath College.
	,, Upendramohan	..	Barisal Brajamohon College.
	Bhaumik, Bishnupada	..	Vidyasagar College.
	,, Manmathanath	..	Non-collegiate student (Ripon College).
160	Bhuti, Purnachandra	..	Non-collegiate student (Rajshahi College).
	Biswas, Anupama	..	Dioccsan College.
	,, Dhirendranath	..	Cooch-Behar Victoria College.
	,, Harischandra	..	Barisal Brajamohan College.
	,, Makhanlal	..	City College.
	,, Manmathanath	..	Vidyasagar College.
	,, Nirapada	..	Berhampur Krishnath College.
	,, Pratima	..	Non-collegiate student (Roll Cal. F. N. 36).
	,, Priyabala	..	Barisal Brajamohon College.
	,, Srischandra	..	Ditto.
170	,, Subodhkumar	..	Ditto.
	,, Taraknath	..	Non-collegiate student (Serampur College).
	Brahma, Syamapada	..	St. Xavier's College.
	Brahmachari, Jitendralal	..	Presidency College.
	Bujarbarua, Jitendranath	..	Gauhati Cotton College.
	Bunyan, Iris Jessil	..	Non-collegiate student (Roll Cal. F. N. 41).
	Burhanuddin		Comilla Victoria College.
	Chaki, Subodhkumar	..	Non-collegiate student (Rajshahi College.)
	Chakladar, Sudhirchandra	..	Ditto.
	Chakrabarti, Asa	..	Non-collegiate student (Roll Pab. F. N. 1).
180	,, Atulchandra	..	Non-collegiate student (Comilla Victoria College).
	,, Brajendrakumar	..	Comilla Victoria College.
	,, Dhirendranath	..	Bankura Wesleyan College.
	,, Jadunath	..	Mymensingh A. M. College.
	,, Jitendrakrishna	..	Pabna Edward College.
	,, Kesabchandra	..	Feni College.
	,, Khagendrachandra	..	Non-collegiate student (Comilla Victoria College).
	,, Lalitkumar	..	Bagerhat College.
	,, Manijabhushan	..	Berhampur Krishnath College.
	,, Manimohan	..	Burdwan Raj College.
190	,, Manoranjan	..	Non-collegiate student (Comilla Victoria College).
	,, Nalinbihari	..	Vidyasagar College.
	,, Niratan	..	Mymensingh A. M. College.
	,, Prabodhchandra	..	Vidyasagar College.
	,, Purnendukusor	..	Mymensingh A. M. College.
	,, Rakhalchandra	..	Non-collegiate student (Daulatpur Hindu Academy).
	,, Sachindralal	..	Barisal Brajamohan College.
	,, Saileschandra	..	Rangpur Carmichael College.
	,, Saileschandra	..	Sanskrit College.
	,, Sarojkumar	..	Non-collegiate student (Comilla Victoria College).
200	,, Sasankajiban	..	City College.
	,, Sibani	..	Bethune College.
	,, Sibsankar	..	Chittagong College.
	,, Sudhansu	..	Pabna Edward College.
	,, Upendranath	..	Barisal Brajamohan College.
	Chanda, Arabinda	..	Sylhet M. C. College.

	Chandar, Sambhunath	..	Presidency College.
	Chandra, Aruncharidra	..	Vidyasagar College.
	,, Ganganarayan	..	Scottish Church College.
	,, Samarendranath	..	Vidyasagar College.
210	Chatterji, Lilian	..	Diocesan College.
	Chattopadhyay, Ajaykumar	..	Burdwan Raj College.
	,, Arunkumar, II	..	St. Paul's College.
	,, Basudeb	..	Barisal Brajamohan College.
	,, Bholanath	..	Vidyasagar College.
	,, Bhupendranath	..	Non-collegiate student (Presidency College).
	,, Bijaykumar	..	City College.
	,, Bimalkumar	..	Ripon College.
	,, Birajabandhab	..	Midnapur College.
	,, Biswanath, II	..	Scottish Church College.
220	,, Chandranath	..	Vidyasagar College.
	,, Chintamani	..	Non-collegiate student (Presidency College).
	,, Debiprasad	..	Ripon College.
	,, Dinabandhu	..	Howrah Narasinha Dutt College.
	,, Dineschandra	..	Bangabasi College.
	,, Gurupada	..	St. Paul's College.
	,, Jatindralal	..	Barisal Brajamohan College.
	,, Jaydeb	..	Sanskrit College.
	,, Kuladananda	..	Non-collegiate student (Ripon College).
	,, Kuraram	..	Burdwan Raj College.
230	,, Mohitmohan	..	Bangabasi College.
	,, Panchugopal	..	Rangpur Carmichael College.
	,, Pyarimohan	..	St. Paul's College.
	,, Rameschandra	..	Non-collegiate student (Daulatpur Hindu Academy).
	,, Ramendramohan	..	Scottish Church College.
	,, Sambhucharan	..	Vidyasagar College.
	,, Sukumar	..	Asutosh College.
	,, Sumohan	..	St. Xavier's College.
	,, Suprabha	..	Non-collegiate student (City College).
	,, Syamakumar	..	Vidyasagar College.
240	Chaudhuri, Anilkumar	..	St. Paul's College.
	,, Atulkrishna	..	Non-collegiate student (Burdwan Raj College).
	,, Bhujangabhushan	..	Non-collegiate student (Serampur College).
	,, Brajeswar	..	Feni College.
	,, Debendralal	..	Chittagong College.
	,, Dharmadas	..	Uttarpara College.
	,, Gopikaranjan	..	Sylhet M. C. College.
	,, Himansumohan	..	Non-collegiate student (Mymensingh A. M. College).
	,, Khagesdhawaja	..	Comilla Victoria College.
	,, Kshitindrakumar	..	Vidyasagar College.
250	,, Makhanlal	..	Comilla Victoria College.
	,, Nirmalchandra	..	Non-collegiate student (Faridpur Rajendra College).
	,, Parswanath	..	Sylhet M. C. College.
	,, Pramathanath	..	Asutosh College.
	,, Rajendranath	..	Daulatpur Hindu Academy.
	,, Rameschandra	..	Vidyasagar College.
	,, Sailendrakumar	..	Sylhet M. C. College.
	,, Subodhranjan	..	Ditto.
	,, Subrata	..	Ditto.
	,, Sudhindrabhushan	..	Vidyasagar College.
260	,, Sudhirkumar	..	Sylhet M. C. College.
	Chiranjilal Jhunjhunwala	..	Scottish Church College.
	Chowdhury Mofazzal Hossain	..	Barisal Brajamohan College.
	Coondoo, Shornalata	..	Scottish Church College.
	Dabiruddin Ahmed	..	Berhampur Krishnath College.
	Damray, Sibendranath	..	Sylhet M. C. College.
	Das, Amarendralal		Vidyasagar College.
	,, Bidhubhushan	..	Ripon College.
	,, Biswanath	..	City College.
	,, Dhirendrabijay	..	Non-collegiate student (Vidyasagar College).
270	,, Haripada	..	Asutosh College.
	,, Jajneswar	..	Vidyasagar College.
	,, Kantikumar	..	Cooch-Behar Victoria College.
	,, Khagendranath	..	Barisal Brajamohan College.
	,, Kumudranjan	..	Sylhet M. C. College.
	,, Lalitchandra	..	Non-collegiate student (Gauhati Cotton College).
	,, Madhurima	..	Non-collegiate student (Roll Cal. F. N. 73).
	,, Manabendranath	..	Sylhet M. C. College.
	,, Munidrachandra	..	Mymensingh A. M. College.
	,, Mathuranath	..	Non-collegiate student (Cooch-Behar Victoria College).
280	,, Nabakisor	..	Feni College.
	,, Nagendranath	..	Daulatpur Hindu Academy.
	,, Narendranath	..	Presidency College.
	,, Rajkisor	..	Midnapur College.
	,, Ramananda	..	Non-collegiate student (Rajshahi College).

	Das, Rameschandra	..	Non-collegiate student (Mymensingh A. M.College).
	,, Ramlal	..	Faridpur Rajendra College.
	,, Sanatkumar	..	Ripon College.
	,, Sasadhar	..	Vidyasagar College.
	,, Sudhiranjan	..	Barisal Brajamohan College.
	,, Suryyakumar	..	Chittagong College.
290	,, Syamcharan	..	Gauhati Cotton College.
	Dasbabaji, Sachinandan	..	Comilla Victoria College.
	Dasgupta, Asokkumar	..	Non-collegiate student (Asutosh College).
	,, Bindubasini	..	Non-collegiate student (Roll Far. F. N. 1).
	,, Haridas	..	Comilla Victoria College.
	,, Nanigopal	..	Feni College.
	,, Nirmalbhushan	..	Rangpur Carmichael College.
	,, Prakriti	..	Non-collegiate student (Roll Cal F. N. 80).
	,, Rakesranjan	..	Sylhet M. C. College.
300	,, Rasamay	..	Rajshahi College.
	,, Renuka	..	Diocesan College.
	,, Saradindu	..	Non-collegiate student (Comilla Victoria College).
	,, Saralkumar	..	Non-collegiate student (Vidyasagar College).
	,, Sasirkumar	..	City College.
	,, Smritilata	..	Non-collegiate student (Roll Cal. F. N. 62).
	,, Sudhansubhushan	..	Barisal Brajamohan College.
	,, Sukumar	..	Ditto.
	Dassarma, Amarendralal	..	Chittagong College.
	Dasseupati, Birendrakumar	..	Sylhet M. C. College.
310	Datta, Amarchand	..	Scottish Church College.
	,, Amarendranath	..	Non-collegiate student (Sylhet M. C. College).
	,, Arunkanti	..	Barisal Brajamohan College.
	,, Dineschandra	..	Non-collegiate student (Pabna Edward College).
	,, Gaurisankar	..	Hetampur Krishnachandra College.
	,, Manoranjan	..	Non-collegiate student (Chittagong College).
	,, Milanchand	..	Scottish Church College.
	,, Niharkana	..	Non-collegiate student (Roll Syl. F. N. 3).
	,, Niranjan	..	Mymensingh A. M. College.
	,, Nutbihari	..	Scottish Church College.
	,, Pradipkumar	..	City College.
320	,, Purnananda	..	Non-collegiate student (St. Paul's College).
	,, Rabinchandra	..	Scottish Church College.
	,, Rabindrakumar	..	Ditto.
	,, Ratanchandra	..	Vidyasagar College.
	,, Saibalchandra	..	Ditto.
	,, Sailendu	..	Ditto.
	,, Sankarkumar	..	Hetampur Krishnachandra College.
	,, Sasankamohan	..	Comilla Victoria College.
	,, Sasibhushan	..	Barisal Brajamohan College.
330	,, Satindranath	..	Bagerhat College.
	,, Saurindramohan	..	Vidyasagar College.
	,, Sitalchandra	..	Ripon College.
	,, Subinay	..	Non-collegiate student (Vidyasagar College).
	,, Sudhirchandra	..	Sylhet M. C. College.
	,, Taracharan	..	Asutosh College.
	,, Thulanchandra	..	Gauhati Cotton College.
	Dattagupta, Binabai	..	Non-collegiate student (Roll Cal. F. N. 39).
	Dattamunsi, Nikhilranjan	..	Krishnagar College.
	Dattaray, Sunil	..	Sylhet M. C. College.
340	De, Arunkumar	..	Presidency College.
	,, Aswinikumar	..	City College.
	,, Girindrakumar	..	Bankura Wesleyan College.
	,, Gopalchandra	..	Comilla Victoria College.
	,, Mrityunjay	..	Scottish Church College.
	,, Nikunjabihari	..	Barisal Brajamohan College.
	,, Premeschandra	..	Non-collegiate student (Sylhet M. C. College).
	,, Sailabala	..	Barisal Brajamohan College.
	,, Umeschandra	..	Non-collegiate student (Ripon College).
	Deb, Asutosh	..	Non-collegiate student (Comilla Victoria College).
	,, Jatindramohan	..	Sylhet M. C. College.
350	,, Jogendrakumar	..	Ditto.
	,, Jyotirindramohan	..	Feni College.
	Debbarma, Harisankar	..	Comilla Victoria College.
	Debi, S. Rajalakshmi	..	Non-collegiate student (Roll Cal. F. N. 46).
	,, Rama	..	Non-collegiate student (Roll Cal F. N. 18).
	Debray, Anilkumar	..	Vidyasagar College.
	Debsarma, Padmanath	..	Non-collegiate student (Cooch-Behar Victoria College).

	Debsarma, Rajatchandra	.. Gauhati Cotton College.
	Desarkar, Harendrachandra	.. Mymensingh A. M. College.
360	,, Jogendrachandra	.. Ditto.
	Dewan Singh Rongmuty	.. Gauhati Cotton College.
	Dhar, Akhilchandra	.. Ditto.
	,, Santoshkumar	.. Berhampur Krishnath College
	,, Sobhana	.. Non-collegiate student (Bethune College).
	Duara, Sharkothar	Gauhati Cotton College.
	Dutta, Mrigendranath	.. Midnapur College.
	Dubey, Radhanath	.. Non-collegiate student (Roll Bur. N. 17).
	Eshaque Miah	.. Comilla Victoria College.
	Fazlul Karim	.. Ditto.
370	George Gandenoo (V)	.. St Xavier's College.
	Gangopadhyay, Aryyanath	.. Non-collegiate student (Presidency College).
	,, Asokchandra	.. Non-collegiate student (Serampur College).
	,, Manojkumar	.. Gauhati Cotton College.
	,, Panchugopal	.. Non-collegiate student (Bangabasi College).
	,, Pradyotkumar	.. Berhampur Krishnath College.
	,, Ramsankar	.. Scottish Church College.
	,, Satyacharan	.. Ditto.
	,, Sunilal	.. City College.
	Genda Lal Tiwari	.. Non-collegiate student (Vidyasagar College).
380	Gharami, Bhagabat	.. Bangabasi College
	Ghatak, Gaurinarayan	.. Barisal Brajamohan College.
	Ghosh, Ambujakrishna	.. Vidyasagar College.
	,, Amulyaprasanna	.. Faridpur Rajendra College.
	,, Anantalal	.. Non collegiate student (Rangpur Carmichael College).
	,, Arunchandra	.. Comilla Victoria College.
	,, Asutosh	.. Faridpur Rajendra College.
	,, Bela	.. Non-collegiate student (Roll Cal F N. 8).
	,, Bhupatilal	.. Chittagong College.
	,, Bidhulal	Ditto.
390	,, Bimalchandra	.. Non-collegiate student (Hughli College).
	,, Bishnupada	.. Daulatpur Hindu Academy.
	,, Chinmayjiban	.. St Xavier's College
	,, Debabrata	.. Scottish Church College
	,, Ena	.. Diocesan College.
	,, Harabhushan	.. City College.
	,, Hemchandra	.. Presidency College.
	,, Himansumohan	.. Non-collegiate student (Comilla Victoria College).
	,, Hrishikes	.. Vidyasagar College.
	,, Indubhushan	.. Comilla Victoria College.
400	,, Jyotischandra	.. Barisal Brajamohan College.
	,, Kshitischandra	.. Daulatpur Hindu Academy.
	,, Malati	.. Non-collegiate student (Roll Chi F. N. 1).
	,, Manika	.. Barisal Brajamohan College.
	,, Manjulata	.. Non collegiate student (Roll Cal. F. N 11).
	,, Nisithchandra	.. Non-collegiate student (Vidyasagar College).
	,, Phanindranath	.. Vidyasagar College.
	,, Pradyotkumar	.. St. Xavier's College.
	,, Praphullakumar	.. Non collegiate student (Vidyasagar College).
	,, Rathindranath	.. Krishnagar College.
410	,, Sailendramohan	.. Vidyasagar College.
	,, Saileschandra	.. Ditto.
	,, Satyendranath	.. Berhampur Krishnath College.
	,, Snehalata	.. Bethune College.
	,, Sunilranjan	.. Barisal Brajamohan College.
	,, Surabhi	.. Bethune College.
	,, Surajit	.. Asutosh College.
	,, Tulsicharan	.. City College.
	Ghoshal, Gurudas	.. Scottish Church College.
	,, Rasamay	.. Non collegiate student (Vidyasagar College).
420	,, Subodhkrishna	.. Ripon College.
	Gobardhan Lalji Mapara	.. Non collegiate student (Roll Bur N. 20).
	Gogoi, Maheswar	.. Vidyasagar College.
	Goswami, Bhabadeb	.. Cooch Behar Victoria College.
	,, Bholanath	.. Non-collegiate student (Hughli College).
	,, Binaykrishna	.. Vidyasagar College.
	,, Dhirendramohan	.. Non collegiate student (Rangpur Carmichael College).
	,, Paritosh	.. Bankura Wesleyan College.
	,, Sudhansusekhar	.. Ditto.
	Goswamimajumdar, Bijoychandra	.. Mymensingh A. M. College.
430	Govind Lal Sharma	.. Presidency College.
	Guha, Anilmohan	.. Vidyasagar College.
	,, Anuprabha	.. Bethune College.

	Guha, Birajmohan	.. Non-collegiate student (Cooch-Behar Victoria College).
	„ Dipendrakumar	.. Presidency College.
	„ Dwijendralal	.. Ripon College.
	„ Jyotsnamayi	.. Diocesan College.
	„ Madhuribala	.. Non-collegiate student (Roll Cal. F. N. 40).
	„ Sachindranath	.. Non-collegiate student (Pabna Edward College).
	„ Santigopal	.. Mymensingh A. M. College.
440	„ Sunilkumar	.. Cooch-Behar Victoria College.
	Gun, Sitanath	.. Mymensingh A. M. College.
	Gupta, Amarendranath	.. Scottish Church College.
	„ Balaichand	.. City College.
	„ Hirendramohan	.. Rangpur Carmichael College.
	„ Kamakhyacharan	.. Sylhet M. C. College.
	„ Kshitischandra	.. Non-collegiate student (Daulatpur Hindu Academy).
	„ Manika	.. Non-collegiate student (Barisal Brajamohan College).
	„ Prabodhchandra	.. Non-collegiate student (Comilla Victoria College).
	„ Sisirkumar	.. Non-collegiate student (Barisal Brajamohan College).
450	„ Sunilkumar	.. Cooch-Behar Victoria College.
	Habib Uddin Ahmed	.. Non-collegiate student (Roll Bar. N. 4).
	Habib Ulla	.. Feni College.
	Hajra, Nagendranath	.. Vidyasagar College.
	„ Praphullakumar	.. Daulatpur Hindu Academy.
	„ Syamapada	.. Burdwan Raj College.
	Haldar, Binaykrishna	.. Bangabasi College.
	„ Nirojchandra	.. St. Xavier's College.
	Hanifuddin Ahammed	.. Mymensingh A. M. College.
	Dandeswar Hazarika	.. Ripon College.
460	Homi S. Karai	.. St. Xavier's College.
	Violette Jacob	.. Loreto House.
	Jadulal Mehta	.. City College.
	Anantakumar Jana	.. Contai P. K. College.
	K. I. Verghese	.. Non-collegiate student (Vidyasagar College).
	K. N. Ramakrishna Iyer	.. Ditto.
	K. Narayana Kaimal	.. Ditto.
	Kakati, Dharmakanta	.. St. Paul's College.
	Kamta Prosad	Ripon College.
	Kar, Nalinimohan	.. Karatia Saadat College.
470	„ Pabitrasankar	.. Sylhet M. C. College.
	„ Prabhatkumar	.. Presidency College.
	„ Sudhansubimal	.. Feni College.
	Karbhaumik, Nanigopal	.. Comilla Victoria College.
	Karray, Sukritiranjan	.. Mymensingh A. M. College.
	Kayastha, Dimbeswar	.. Gauhati Cotton College.
	Khan Emdad Ali	.. Faridpur Rajendra College.
	Khan, Sachindranath	.. Vidyasagar College.
	Kazi Ali Asgar	.. Islamia College.
	Kazi Atiar Rahman	.. Non-collegiate student (Daulatpur Hindu Academy).
480	Kazi Azizal Hoque	.. Non-collegiate student (Barisal Brajamohan College).
	Kazi Md. Abdul Fattah	.. Non-collegiate student (Islamia College).
	Kazi Najmul Haq	.. Pabna Edward College.
	Kazi Nawazesh Hossain	.. Feni College.
	Khandaker Golam Sarowar	.. Mymensingh A. M. College.
	Khoda Baksha Mian	.. Ripon College.
	Khondeker Mahammud Samsuddin	.. Berhampur Krishnath College.
	Kishorilal Bhagchandka	.. Vidyasagar College.
	Kole, Satkari	.. Ditto.
	Konar, Jayantikumar	.. Scottish Church College.
490	Kukri, Pasupati	.. Vidyasagar College.
	Kundu, Pramodanath	.. Non-collegiate student (Rajshahi College).
	„ Sudarsan	.. Ditto.
	„ Sukdeb	.. Non-collegiate student (Vidyasagar College).
	Laha, Kartikchandra	.. Presidency College.
	Lahiri, Arunendranath	.. Asutosh College.
	„ Byomkes	.. Rangpur Carmichael College.
	„ Indubhushan	.. Vidyasagar College.
	„ Pratima	.. Non-collegiate student (Roll Cal. F. N. 37).
	Lala, Rabindraprasad	.. Hetampur Krishna Chandra College.
500	Lamphrang Tham	.. Gauhati Cotton College.
	Laskar, Digendranath	.. Sylhet M. C. College.
	Lodh, Phanindrabhushan	.. Comilla Victoria College.
	Loverwell, U.	.. Gauhati Cotton College.
	Ludhan Ali Laskar	.. Sylhet M. C. College.
	Madan Lal Mookeem	.. Vidyasagar College.
	Mahamed Ali Khan	.. Non-collegiate student (Comilla Victoria College).
	Mahammad Ismail Hossain	.. Faridpur Rajendra College.
	Mahammed Habibullah	.. Mymensingh A. M. College.
	Mahammod Ali	.. Ditto.

510	Mahata, Prabhakar	.. Bankura Wesleyan College.
	Maheswari Prasad Singh	.. Non-collegiate student (Vidyasagar College).
	Mahiuddin Ahamed	.. Feni College.
	Mahtabuddin Ahamed	.. Rangpur Carmichael College.
	Maitra, Bimalakanta	.. Non-collegiate student (Rangpur Carmichael College).
	„ Birendrakumar	.. Scottish Church College.
	„ Haridas	.. City College.
	„ Manindramohan	.. Rangpur Carmichael College.
	„ Sibadas	.. Ripon College.
	Majumdar, Amulyacharan	.. Faridpur Rajendra College.
520	„ Bijaysankar	.. St. Paul's College.
	„ Binaykrishna	.. Sylhet M. C. College.
	„ Kantibhushan	.. Mymensingh A. M College.
	„ Kshitishchandra	.. Comilla Victoria College.
	„ Krishnachandra	.. St. Paul's College.
	„ Kumudbhushan	.. Narail Victoria College.
	„ Nagendrachandra	.. Cooch-Behar Victoria College.
	„ Samarendrachandra	.. Sylhet M. C. College.
	„ Sarojkumar	.. Hughli College.
	„ Subodhranjan	.. Non-collegiate student (Krishnagar College).
530	„ Susilkumar	.. Cooch-Behar Victoria College.
	„ Upendrakumar	.. Comilla Victoria College.
	Mallik, Nripendrachandra	.. Asutosh College.
	Mandal, Debidas	.. Berhampur Krishnath College.
	„ Kartikchandra	.. Vidyasagar College.
	„ Pareshnath	.. Bankura Wesleyan College.
	„ Sasibhushan	.. Serampur College.
	„ Satischandra	.. Bangabasi College.
	Mangasadam Gouramani Singh	.. Sylhet M. C. College.
	Mannulal Kejriwal	.. Scottish Church College.
540	Marfat Ali Khan	.. Karatia Saadat College.
	Marzuqullah	.. Feni College.
	Mashiuddin Ahmad	.. Mymensingh A. M. College.
	Matiar Rahman Chowdhury	.. Rangpur Carmichael College.
	Maulik, Praphullakumar	.. Narail Victoria College.
	Maung Ba Khin	.. St. Paul's College.
	Mayengbam Radhamohan Singh	.. Sylhet M. C. College.
	M. D. Jaid Ali	.. Mymensingh A. M. College.
	M. D. M. Wajed Ali Khan	.. Karatia Saadat College.
	Md. Abdul Aziz	.. Bagerhat College.
550	Md. Abdul Latif	.. Non-collegiate student (Karatia Saadat College).
	Md Abdul Latif	.. Sylhet M. C. College.
	Md. Abdul Majid	.. Mymensingh A. M. College.
	Md. Abdul Mazid	.. Ditto.
	Md. Abdur Rahim	.. Sylhet M. C. College.
	Md. Abdur Rashid	.. Mymensingh A. M. College.
	Md. Akbar Ali	.. Karatia Saadat College.
	Md. Asmat Ali Khan	.. Barisal Brajamohan College.
	Md. Atawar Rahman	.. Ripon College.
	Md. Boyetulla	.. Hughli College.
560	Md. Eradatullah Chaudhury	.. Feni College.
	Md. Golam Robbani	.. Sylhet M. C. College.
	Md. Ibrahim	.. Karatia Saadat College.
	Md. Ibrahim	.. Mymensingh A. M. College.
	Md. Ismail	.. Ditto.
	Md. Jahur Uddin Miah	.. Ditto.
	Md. Matiur Rahman	.. Gauhati Cotton College.
	Md. Mazharul Islam	.. Mymensingh A. M. College.
	Md. Momtaz Uddin Sarkar	.. Non-collegiate student (Rajshahi College).
	Md. Moquebul Ali Mian	.. Rajshahi College.
570	Md. Reza Ali Miah	.. Barisal Brajamohan College.
	Md. Saboruddin	.. Non-collegiate student (Rajshahi College).
	Md. Shafiqul Islam	.. Comilla Victoria College.
	Md. Shamsozzoha Biswas	.. Ripon College.
	Md. Shamsul Hoque	.. Non-collegiate student (Comilla Victoria College).
	Md. Shiraz Ali	.. Mymensingh A. M. College.
	Md. Tafozzal Hossain	.. Ripon College.
	Md. Tahb Uddin Mandal	.. Rangpur Carmichael College.
	Md. Zainuddin Ahmed	.. City College.
	Mirza Ashraff Hossain	.. Faridpur Rajendra College.
580	Misbahul Islam Chaudhury	.. Sylhet M. C. College.
	Misra, Chandrakanta	.. Vidyasagar College.
	„ Dhirajmohan	.. Ditto.
	„ Nalinikrishna	.. Ditto.
	„ Nrisinhanarayan	.. Berhampur Krishnath College.
	Mistri, Kunjabihari	.. Barisal Brajamohan College.
	Mitra, Bijayseni	.. Loreto House.
	„ Dwijendramohan	.. St. Xavier's College.
	„ Khagendranath	.. Hetampur Krishna Chandra College.
	„ Kiritibhushan	.. Burdwan Raj College.
590	„ Lila	.. Non-collegiate student (Roll Cal. F. N. 66).
	„ Sachikumar	.. Scottish Church College.
	„ Sailendrakrishna	.. Asutosh College.
	„ Saktipada	.. Bankura Wesleyan College.

	Mitra, Santilal	.. Non-collegiate student (Comilla Victoria College).
	„ Sudhansusekhar	.. Krishnagar College.
	„ Sunilkumar	.. Vidyasagar College.
	„ Suruchibhushan	.. Ripon College.
	Mockdum Hossain Mollah	.. Rangpur Carmichael College.
	Mofazol Hussain	.. Gauhati Cotton College.
600	Mohamed Jahan Ally Sonar	.. Rangpur Carmichael College.
	Mohammad Ali Nawaz Chaudhury	.. Non-collegiate student (Comilla Victoria College).
	Mohammad Faridullah	.. Comilla Victoria College.
	Mohammad Hassan	.. Non-collegiate student (Islamia College).
	Mohammad Hossain Miah	.. Karatia Saadat College.
	Mohammed Hanif (P)	.. City College.
	Mohammed Mahmud Chawdhury	.. Sylhet M. C. College.
	Mohammed Mohsen Mian	.. Karatia Saadat College.
	Mohd. Hamid Uddin Siddiqui	.. Ripon College.
	Mohiuddin Ahmed	.. Islamia College.
610	Mohiuddin Ahmed	.. Ripon College.
	Mokhlesur Rahman	.. Non-collegiate student (Islamia College).
	Mondol, Bidhudan	.. Non-collegiate student (Roll Cal. N. 5).
	Morshed Ali Chowdhury	.. Feni College.
	Mosharraf Hossain	.. Non-collegiate student (Serampur College).
	Moyeen Uddin Ahmed Chowdhury	.. Sylhet M. C. College.
	Mridha, Nagendranath	.. Non-collegiate student (Bagerhat College).
	Muhamed Nural Hussain	.. Gauhati Cotton College.
	Muhammad Abu Bakr	.. Karatia Saadat College.
	Muhammad Fazlur Rahman	.. Ditto.
620	Muhammad Ullah	.. Barisal Brajamohan College.
	Muhammed Abdulla	.. Comilla Victoria College.
	Mukherjee, Ajitkumar	.. St. Paul's College.
	Mukhopadhyay, Abanimohan	.. Vidyasagar College.
	„ Amiyakumar	.. St. Xavier's College.
	„ Amiyanath	.. Presidency College.
	„ Asutosh	.. Vidyasagar College.
	„ Barindrakumar	.. Ditto.
	„ Bijanibihari	.. Ditto.
	„ Birendramohan	.. Non-collegiate student (Ripon College).
630	„ Bishnumohan	.. Asutosh College.
	„ Biswanath	.. Burdwan Raj College.
	„ Debikinkar	.. Vidyasagar College.
	„ Diptinath	.. St. Xavier's College.
	„ Durgagati	.. Berhampur Krishnath College.
	„ Jatindralal	.. Barisal Brajamohan College.
	„ Kalikinkar	.. Hetampur Krishna Chandra College.
	„ Kalipada	.. Vidyasagar College.
	„ Kamakhyacharan	.. Ditto.
	„ Kamalakanta	.. Ditto.
640	„ Khagendranath	.. Ripon College.
	„ Kshetraprasad	.. Ditto.
	„ Makhanlal	.. Non-collegiate student (Vidyasagar College).
	„ Manindranath	.. Non-collegiate student (St. Paul's College).
	„ Matilal	.. Daulatpur Hindu Academy.
	„ Naruchandra	.. Barisal Brajamohan College.
	„ Nirmalchandra	.. Vidyasagar College.
	„ Nirmalkumar, I	.. Ditto.
	„ Nirmalkumar, II	.. Ditto.
	„ Nirmalyakumar	.. Scottish Church College.
650	„ Prabhatkumar	.. Non-collegiate student (Presidency College).
	„ Pratibha	.. Diocesan College.
	„ Ratanchand	.. Bankura Wesleyan College.
	„ Rohinimohan	.. Asutosh College.
	„ Saktidaprasad	.. Non-collegiate student (Burdwan Raj College).
	„ Saktiprasanna	.. Scottish Church College.
	„ Santoshchandra	.. Barisal Brajamohan College.
	„ Sarojkumar	.. Non-collegiate student (Daulatpur Hindu Academy).
	„ Sasthidas	.. Vidyasagar College.
	„ Satyagopal	.. Non-collegiate student (Vidyasagar College).
660	„ Sisirkumar	.. Vidyasagar College.
	„ Sudhansukumar	.. Sanskrit College.
	„ Sunilkumar	.. Asutosh College.
	„ Syamadas	.. Krishnagar College.
	„ Syamchandra	.. Vidyasagar College.
	„ Tarakumar	.. Ditto.
	„ Upendramohan	.. Burdwan Raj College.
	Munshi Mujibar Rahman	.. Non-collegiate student (Daulatpur Hindu Academy).
	Munshi Sarwar Jan	.. Bagerhat College.
	Murli Manohar Prasad	.. Vidyasagar College.
670	Muslehuddin Ahmed	.. Mymensingh A. M. College.
	Mustaphi, Matilal	.. Vidyasagar College.

	Mustaphi, Sarojnath	.. Non-collegiate student (St. Paul's College).
	Nag, Amiyabihari	.. Bangabasi College.
	„ Dwijendrakumar	.. Faridpur Rajendra College.
	„ Nirmal	.. City College.
	„ Sasindrachandra	.. Non-collegiate student (Sylhet M. C. College).
	„ Sushilkumar	.. Mymensingh A. M. College.
	Najar Man Singh	.. Vidyasagar College.
	Namwar Ali	.. Sylhet M. C. College.
680	Nanda, Kumedacharan	.. Contai P. K. College.
	Nandi, Basudeb	.. Burdwan Raj College.
	„ Chittaranjan	.. Comilla Victoria College.
	„ Dineschandra	.. Non-collegiate student (Vidyasagar College).
	„ Nikhilnath	.. Presidency College.
	Nandichaudhuri, Upendrakumar	.. Sylhet M. C. College.
	Nasir Uddin Chowdhury	.. Ditto.
	Nath, Debendrakumar	.. Non-collegiate student (Roll Cal. N. 318).
	„ Harekrishna	.. Comilla Victoria College.
	„ Manindrachandra	.. Chittagong College.
690	„ Mathuramohan	.. Feni College.
	Nathmajumdar, Dineschandra	.. Non-collegiate student (Comilla Victoria College).
	Nathoo Ram Sharma	.. Non-collegiate student (Vidyasagar College).
	Dora Nayak	.. Non-collegiate student (Scottish Church College).
	Nazir Uddin Ahmed	.. Rajshahi College.
	Niyogi, Parameshprasanna	.. Non-collegiate student (Comilla Victoria College).
	„ Sabitri	.. Bethune College.
	„ Sudhirchandra	.. Midnapur College.
	Nurel Hoque Zomeedar	.. Non-collegiate student (City College).
	Nur Mahammed Sikder	.. Barisal Brajamohan College.
700	Nur Mia	.. Non-collegiate student (Comilla Victoria College).
	Ojha, Dwarkanath	.. Howrah Narasinha Dutt College.
	Oli Ahammad	.. Chittagong College.
	Joan Aileen Knox Ord	.. Non-collegiate student (Loreto House).
	Pal, Arabinda	.. Burdwan Raj College.
	„ Maniklal	.. Vidyasagar College.
	„ Nanigopal	.. Comilla Victoria College.
	„ Sasibhushan	.. Midnapur College.
	„ Sulalitchandra	.. Non-collegiate student (Vidyasagar College).
	„ Sunitsekhareswar	.. Rangpur Carmichael College.
710	Palit, Nirmalkrishna	.. Vidyasagar College.
	Panja, Manmohan	.. Burdwan Raj College.
	Panju Molla	.. Faridpur Rajendra College.
	Nergis Parakh	.. Non-collegiate student (Loreto House).
	Ramkrishna Parbi	.. Vidyasagar College.
	Parmeshwari Prashad Singh	.. Ditto.
	Pathak, Bhabendranarayan	.. Bankura Wesleyan College.
	„ Brijbehari	.. Vidyasagar College.
	Patra, Krishnaprasad	.. Contai P. K. College.
	Phukan, Bapukan	.. Gauhati Cotton College.
720	Poddardebabhuti, Akhilkumar	.. City College.
	Pradhan, Ahibhushan	.. Non-collegiate student (Roll Cal. N. 324).
	Pramanik, Bhupendranath	.. Daulatpur Hindu Academy.
	„ Lakshmikanta	.. Ripon College.
	Pran, Kumar	.. Vidyasagar College.
	Pukhrambam Tomchou Singh	.. Sylhet M. C. College.
	Purkayastha, Rukminimohan	.. Ditto.
	„ Umeschandra	.. Ditto.
	Quazi Abul Hosain Mohammad Obaidullah	.. Presidency College.
	Quazi Lotfor Rahaman	.. Barisal Brajamohan College.
730	Raghubansh Sahay	.. Vidyasagar College.
	Raha, Rabindranath	.. City College.
	Rajakumar Bijaychandra Singh	.. Sylhet M. C. College.
	Ramji Chaubey	.. Vidyasagar College.
	Rauth, Khagendrachandra	.. Mymensingh A. M. College.
	„ Matilal	.. Non-collegiate student (Scottish Church College).
	Ray, Achyutakrishna	.. Rangpur Carmichael College.
	„ Amiyabhushan	.. Asutosh College.
	„ Anandakumar	.. Ripon College.
	„ Anathnath	.. Non-collegiate student (Roll Cal. N. 275).
740	„ Anilkrishna	.. Feni College.
	„ Asokkumar, I	.. Asutosh College.
	„ Asutosh, II	.. Non-collegiate student (Comilla Victoria College).
	„ Aswinikumar	.. Ripon College.
	„ Barischandra	.. Bangabasi College.
	„ Bhupendranarayan	.. Mymensingh A. M. College.
	„ Bimalaprasad	.. St. Paul's College.
	„ Birendranath	.. Vidyasagar College.

	Ray, Buddhadeb	.. Non-collegiate student (Hughli College).
	„ Dina	.. Non-collegiate student (Roll Cal. F. N. 58).
750	„ Golokpati	.. Bagerhat College.
	„ Gopiballabh	.. Vidyasagar College.
	„ Harendralal	.. Sylhet M. C. College.
	„ Haridas	.. Daulatpur Hindu Academy.
	„ Harahanath	.. Non-collegiate student (Barisal Brajamohan College).
	„ Herambachandra	.. Ripon College.
	„ Jagadischandra	.. Scottish Church College.
	„ Jamuna	.. Diocesan College.
	„ Janardankrishna	.. Cooch-Behar Victoria College.
	„ Jatindranath	.. Daulatpur Hindu Academy.
760	„ Mahimchandra	.. Cooch-Behar Victoria College.
	„ Malina	.. Barisal Brajamohan College.
	„ Narmadabala	.. Non-collegiate student (Roll Cal. F. N. 71).
	„ Nimaicharan	.. Asutosh College.
	„ Nityananda	.. Non-collegiate student (Burdwan Raj College).
	„ Pareschandra	.. Comilla Victoria College.
	„ Phanindrachandra	.. Chittagong College.
	„ Phanindranath	.. Bankura Wesleyan College.
	„ Praphullachandra	.. Mymensingh A. M. College.
	„ Praphullakumar	.. St. Xavier's College.
770	„ Pratapchandra	.. Vidyasagar College.
	„ Rabindranath	.. Non-collegiate student (Scottish Church College).
	„ Ramendrakisor	.. Non-collegiate student (Mymensingh A. M. College).
	„ Sachindranath	.. Vidyasagar College.
	„ Santoshkumar	.. Ditto.
	„ Satischandra	.. Mymensingh A. M. College.
	„ Shashtidas	.. Berhampur Krishnath College.
	„ Sibaprasad	.. Vidyasagar College.
	„ Sitanath	.. Ditto.
	„ Srimantakumar	.. Barisal Brajamohan College.
780	„ Sudhirranjan	.. Ditto.
	„ Sunitikumar	.. Vidyasagar College.
	„ Suprakaschandra	.. Pabna Edward College.
	„ Sureschandra	.. Burdwan Raj College.
	„ Susilkumar	.. City College.
	Raybiswas, Jogendramohan	.. Chittagong College.
	Raychaudhuri, Amiyakumar	.. Daulatpur Hindu Academy.
	„ Animeskumar	.. Feni College.
	„ Asutosh	.. Scottish Church College.
	„ Birajaprasanna.	.. Ditto.
790	„ Kalidas	.. Vidyasagar College.
	„ Nirendrakisor	.. Mymensingh A. M. College.
	„ Pramadanath	.. Scottish Church College.
	„ Sudhirkumar	.. Vidyasagar College.
	Raymaulik, Satyabhusahn	.. Ditto.
	Reazul Hussain	.. Gauhati Cotton College.
	R. Narayana Pillai	.. Non-collegiate student (Vidyasagar College).
	Romiz Ahmad Chowdhury	.. Non-collegiate student (Chittagong College).
	Rowshan Ali Khan	.. Cooch-Behar Victoria College.
	Sabed Ali Mian	.. Feni College.
800	Sadhu, Hirendranath	.. Scottish Church College.
	Sadhu Meah	.. Mymensingh A. M. College.
	Saha, Abinaschandra	.. Vidyasagar College.
	„ Aswinikumar	.. Faridpur Rajendra College.
	„ Bibekananda	.. Scottish Church College.
	„ Chaitanyanath	.. Ditto.
	„ Dwijendranath	.. Bangabasi College.
	„ Harekrishna	.. Comilla Victoria College.
	„ Sachikanta	.. Non-collegiate student (Rajshahi College).
	Saharay, Jnanendramohan	.. Scottish Church College.
810	Sandhiram Saharia	.. Gauhati Cotton College.
	Said Ahmed (V)	.. St. Xavier's College.
	Saikia, Bipinchandra	.. St. Paul's College.
	„ Chandrakanta	.. Gauhati Cotton College.
	„ Lalitchandra	.. Ditto.
	Samaddarchaudhuri, Sudarsannath	.. Non-collegiate student (Barisal Brajamohan College).
	Sangaijam Gaurhari Singh	.. Gauhati Cotton College.
	Baijnath Sanganeria	.. Vidyasagar College.
	Sanyal, Baidyanath	.. Ditto.
	„ Bhupeschandra	.. Non-collegiate student (Rajshahi College).
820	„ Manimohan	.. Non-collegiate student (Vidyasagar College).
	„ Sachindramohan	.. Vidyasagar College.
	„ Santimay	.. Non-collegiate student (Krishnagar College).
	Sarbabidya, Jogendrachandra	.. Chittagong College.
	Sarkar, Adhirkumar	.. Non-collegiate student (Pabna Edward College).

	Sarkar, Ajitkumar	.. Non-collegiate student (Scottish Church College).
	,, Amarendranath	.. Berhampur Krishnath College.
	,, Arati	.. Non-collegiate student (City College).
	,, Arunkumar	.. Non-collegiate student (Scottish Church College).
	,, Bimaybhushan	.. Burdwan Raj College.
830	,, Birendranath	.. Karatia Saadat College.
	,, Ganapati	.. Burdwan Raj College.
	,, Hrishikes	.. Non-collegiate student (Rajshahi College).
	,, Krishnagopal	.. Bangabasi College.
	,, Nalinikanta	.. Non-collegiate student (Comilla Victoria College).
	,, Parimalkumar	Non-collegiate student (Mymensingh A. M. College).
	,, Rabindranath	.. Sylhet M. C. College.
	,, Rajanikanta	.. Berhampur Krishnath College.
	,, Rameschandra	.. Comilla Victoria College.
	,, Sambhusekhar	.. Uttarpara College.
840	,, Sudhindranath	.. Non-collegiate student (Pabna Edward College).
	,, Sureschandra	.. Cooch-Behar Victoria College.
	,, Susilchandra	.. Asutosh College.
	Sarkhel, Harendralal	.. Barisal Brajamohan College.
	,, Nayanranjan	.. Ditto.
	Sarma, Biswanath	.. Non-collegiate student (Cooch-Behar Victoria College).
	,, Bipinchandra	.. Gauhati Cotton College.
	,, Subimalchandra	.. City College.
	Sebai, Bhabatosh	.. Serampur College.
	Sen, Adityanath	.. Burdwan Raj College,
850	,, Baidyanath	.. Bangabasi College.
	,, Bijaykumar	.. Scottish Church College.
	,, Binaykumar	.. St. Paul's College.
	,, Jitendranath	.. Rangpur Carmichael College.
	,, Kamala	.. Barisal Brajamohan College.
	,, Manilal	.. Non-collegiate student (Ripon College).
	,, Nanigopal	.. Midnapur College.
	,, Ranendu	.. City College.
	,, Santosh	.. Gauhati Cotton College.
	,, Satyendraprasad	.. Non-collegiate student (Presidency College).
860	,, Sephalika	.. Bethune College.
	,, Susilchandra	.. Scottish Church College.
	,, Tarapada	.. City College.
	Senapati, Maitri	.. Non-collegiate student (Roll Cal. F. N. 70).
	Senbarat, Suhritkumar	.. Vidyasagar College.
	Sengupta, Amiyakumar	.. Narail Victoria College.
	,, Bimalchandra	.. Scottish Church College.
	,, Birendrakumar	.. Barisal Brajamohan College.
	,, Dhirendranath, II	.. Ditto.
	,, Jyotiranauda	.. Non-collegiate student (City College).
870	,, Kananbihari	.. Bankura Wesleyan College.
	,, Narendranath	.. Scottish Church College.
	,, Pramatharanjan	.. Non-collegiate student (Pabna Edward College).
	,, Pramodranjan	.. Non-collegiate student (Barisal Brajamohan College).
	,, Sachindraprasad	.. Mymensingh A. M. College.
	,, Sailendranath	.. Non-collegiate student (Faridpur Rajendra College).
	,, Santoshkumar	.. Non-collegiate student (Barisal Brajamohan College).
	,, Saradindu	.. Scottish Church College.
	,, Suruchi	.. Bethune College.
	Serajuddin Mia	.. Feni College.
880	Set, Satyasaran	.. Vidyasagar College.
	Shaikh Abdul Hakim	.. Islamia College.
	Shaikh Abu Toyab	.. Berhampur Krishnath College.
	Shaikh Akbar	.. Bagerhat College.
	Shaikh Mohsen Ali	.. Karatia Saadat College.
	Shaikh Romjan Ali	.. Berhampur Krishnath College.
	Shaikh Shafi Uddin	.. Non-collegiate student (Daulatpur Hindu Academy).
	Shaikh Shamas Uddin	.. Karatia Saadat College.
	Shaikh Ziller Rahaman	.. Berhampur Krishnath College.
	Sheokumar Pathak	.. Ditto.
890	Shri Pati Panday	.. Vidyasagar College.
	Shriniwash Purohit	.. Ditto.
	Shur Hla U.	.. St. Paul's College.
	Siddiqullah	.. Feni College.
	Sil, Aswinikumar	.. Mymensingh A. M. College.
	,, Jaharlal	.. Vidyasagar College.
	,, Satischandra	.. Sylhet M. C. College.
	Singh, Kaliprasad	.. Berhampur Krishnath College.
	,, Thiam Shekhar	.. Sylhet M. C. College.
	Sinha, Bibekananda	.. Bangabasi College.
900	,, Bishnupada	.. Bankura Wesleyan College.
	,, Durgadas	.. Hetampur Krishna Chandra College.
	,, Harinarayan	.. Ditto.

	Sinha, Phullarani	.. Non-collegiate student (Roll Cal. F N 17).
	,, Ramanikanta	.. Fem College.
	,, Ramanaprasad	.. Rangpur Carmichael College.
	,, Sudhirchandra	.. Faridpur Rajendra College.
	Sinhamia, Madanmohan	.. Non-collegiate student (Vidyasagar College).
	Sinharay, Amalkumar	.. Presidency College
	,, Barunkumar	.. St. Paul's College.
910	,, Samarjit	.. Scottish Church College
	Sircar, Urmila	.. Bethune College.
	S Monsur Ali	.. Islamia College
	Snai, Purnendukumar	.. Vidyasagar College
	Snayama Rajkumar	.. Sylhet M C College
	Sonowal, Mohanchandra	.. Gauhati Cotton College.
	Sukul, Bhupendraprasad	.. City College
	S W. Lakitullah	.. Barisal Brajomohan College
	Syed Abu Daud Fakhruddin Ahmed	.. Islamia College.
	Syed A. H. Najmul Huda	.. Non-collegiate student (Islamia College)
920	Syed Bunhan Uddin Ahmed	.. Burdwan Raj College.
	Syed Faleh An Meerza (VP)	.. Non-collegiate student (Islamia College).
	Syed Humayoon Jah	.. Ditto.
	Syed Md. Azam Hashim	.. Non-collegiate student (Ripon College).
	Syed Md. Musa Kayem Nuri	.. Islamia College.
	Syed Moazzam Hossain	.. Faridpur Rajendra College.
	Syed Mofizur Rahman	.. Islamia College.
	Syed Rashadah Husain (V)	.. Presidency College.
	Syed Shahed Ali ul Hossain	.. Midnapur College.
	Syed Shamsul Haque	.. Non collegiate student (City College).
930	Syed Shariful Islam	.. Rangpur Carmichael College.
	Syed Zillar Rahman	.. Non-collegiate student (Islamia College).
	Tahir Ahmed Choudhury	.. Sylhet M. C. College.
	Talib Uddin	.. Ditto.
	Tamuli, Gunuram	.. Gauhati Cotton College.
	Tapadar, Jasodalal	.. Non collegiate student (Comilla Victoria College).
	Thakur, Kanailal	.. Sanskrit College.
	Uma Kathju	.. Diocesan College.
	Vasant Khanderao Pradhan	.. Sylhet M. C. College.
	Vemury Nageswar Rao	.. Non collegiate student (Roll Bur. N. 21).
940	V. Vasu Devan	.. Non collegiate student (Vidyasagar College).
	Wali-ul-Islam	.. Krishnagar College.
942	Walker, George	.. St. Xavier's College.

THIRD DIVISION.

(In alphabetical order.)

	Abdul Aziz	.. Barisal Brajomohan College.
	Abdul Manim Meah	.. Non-collegiate student (Barisal Brajomohan College).
	Abu Sharf Muhammad Abdul Majid	.. Rangpur Carmichael College.
	Abul Hashem	.. St. Xavier's College.
	A. F. Azharuddin Ahmed	.. Bagerhat College.
	A K. Fazal Ahmed	.. Fem College.
	Ali Akbar	.. Ditto.
	Arfiz Ali	.. Sylhet M. C. College.
	A. S. Md Mozharul Huque	.. Comilla Victoria College.
10	Bag, Kartikchandra	.. Serampur College.
	Bagchi, Bhawanprasad	.. Berhampur Krishnath College.
	Bandyopadhyay, Abanindranath	.. Asutosh College.
	,, Asutosh	.. Non-collegiate student (Barisal Brajamohan College).
	,, Bandyanath	.. Berhampur Krishnath College.
	,, Basudeb	.. Non-collegiate student (Daulatpur Hindu Academy).
	,, Bhabakali	.. Non collegiate student (City College).
	,, Gopalprasad	.. Non-collegiate student (Barisal Brajamohan College)
	,, Kalikumar	.. Hetampur Krishna Chandra College.
	,, Kalipada	.. Howrah Narasinha Dutt College.
	,, Kalisaday	.. Daulatpur Hindu Academy.
20	,, Kumudranjan	.. Non-collegiate student (Barisal Brajamohan College).
	,, Makhanlal	.. Serampur College.
	,, Murarimohan	.. Ripon College.
	,, Nirmalchandra	.. Hetampur Krishna Chandra College.
	,, Nripendranath	.. Non-collegiate student (Ripon College).
	,, Pratapkumar	.. Non-collegiate student (St. Paul's College).
	,, Pulinbihari	.. Rangpur Charmichael College.
	,, Sinhanta	.. Non-collegiate student (Chittagong College).
	,, Tareschandra	.. Hooghli College.
	,, Umasankar	.. Berhampur Krishnath College.
30	,,	

	Bara, Dambarudhar	..	Cooch Behar Victoria College.
	Bardolai, Promadhar	..	Gauhati Cotton College.
	Barua, Indreswar	..	Ditto.
	Basu, Balaichand	..	Asutosh College.
	„ Bijaybhushan	..	Barisal Brajamohan College.
	„ Chinmayi	..	Non-collegiate student (Roll Cal. F. N. 75).
	„ Prasantakumar	..	Vidyasagar College.
	Basuchaudhuri, Tarakchandra	..	City College.
	Basumajumdar, Anilprasanna	..	Rangpur Carmichael College.
40	Belel, Radhagobinda	..	Vidyasagar College.
	Beria, Amulyaratan	..	Midnapore College.
	Bhattacharyya, Bimalaprasad	..	Non-collegiate student (Burdwan Raj College).
	„ Birendranath	..	Mymensingh A. M. College.
	„ Chintaharan	..	Non-collegiate student (Vidyasagar College).
	„ Gauriprasanna	..	Ripon College.
	„ Haricharan	..	Non-collegiate student (Barisal Brajamohan College).
	„ Jitendrachandra	..	Non-collegiate student (Mymensingh A. M. College).
	„ Kalipada	..	Sylhet M. C. College.
	„ Kedarnath	..	Ripon College.
50	„ Kiranchandra	..	Presiddency College.
	„ Narendranath	..	Barisal Brajamohan College.
	„ Pasupati	..	Non-collegiate student (Bangabasi College).
	„ Prakritiranjan	..	Non-collegiate student (Bhowanipur Asutosh College).
	„ Praphullakumar	..	Comilla Victoria College.
	„ Purnachandra	..	Mymensingh A. M. College.
	„ Santoshkumar	..	Non-collegiate student (Vidyasagar College).
	„ Satyendranath	..	Ripon College.
	„ Taranath	..	Burdwan Raj College.
	Bhaumik, Srinathbandhu	..	Non-collegiate student (Comilla Victoria College).
60	„ Sukhamay	..	Berhampur Krishnath College.
	Biswas, Rakhalchandra	..	Barisal Brajamohan College.
	„ Satyendrachandra	..	Non-collegiate student (Sylhet M. C. College).
	Bora, Binodchandra	..	Non-collegiate student, (Gauhati Cotton College).
	Chakrabarti, Ahindranath	..	Non-collegiate student (Presidency College).
	„ Bankibihari	..	Wesleyan College, Bankura.
	„ Krishnakali	..	Vidyasagar College.
	„ Nalinikanta	..	Comilla Victoria College.
	„ Rameschandra	..	Non-collegiate student (Barisal Brajamohan College).
	„ Ramgopal	..	Burdwan Raj College.
70	„ Subodhchandra	..	Asutosh College.
	Chanda, Bina	..	Non-collegiate student (Cooch Behar Victoria College).
	Chattopadhyay, Birendranath	..	Non-collegiate student (Daulatpur Hindu Academy).
	„ Chandicharan	..	Howrah Narasinha Dutt College.
	„ Debaprasad	..	Bangabasi College.
	„ Hiralal	..	Non-collegiate student (Scottish Church College).
	„ Saktipada	..	Hughli College.
	„ Satyendranath	..	Asutosh College.
	„ Syamapada	..	Barisal Brajamohan College.
	Chaudhuri, Bibhuranjan	..	Comilla Victoria College.
80	„ Krishnasasi	..	Non-collegiate student (Rajshahi College).
	„ Sambhunath	..	Feni College.
	Das, Brajendrachandra	..	Mymensingh A. M. College.
	„ Hiranchandra	..	Vidyasagar College.
	„ Narayanchandra	..	Barisal Brajamohan College.
	„ Phanindramohan	..	Mymensingh A. M. College.
	„ Purna	..	Vidyasagar College.
	„ Radharaman	..	Non-collegiate student (Berhampur Krishnath College).
	„ Subhendranath	..	Sylhet M. C. College.
	„ Sukumar	..	Comilla Victoria College.
90	„ Surendranath	..	Barisal Brajamohan College.
	Dasgupta, Birendranath	..	Bankura Wesleyan College.
	„ Indubhushan	..	Ripon College.
	„ Nirmalchandra	..	St. Xavier's College.
	„ Pareschandra	..	Barisal Brajamohan College.
	Datta, Kshitindramohan	..	Sylhet M. C. College.
	„ Sambhucharan	..	Non-collegiate student (Krishnagar College).
	„ Satyaranjan	..	City College.
	„ Sudhirkumar	..	Hetampur Krishnachandra College.
	Dattaray, Trailokyakumar	..	Non-collegiate student (Comilla Victoria College).
100	De, Amulyakumar	..	Non-collegiate student (Daulatpur Hindu Academy).
	„ Birendrachandra	..	Karatia Saadat College.
	„ Dineschandra	..	Mymensingh A. M. College.

	De, Hrishikes	.. Ripon College.
	„ Nagendrachandra	.. Mymensingh A. M. College.
	„ Rebatikanta	.. Ditto.
	„ Tarapada	.. Howrah Narasinha Dutt College.
	Deb, Harendrachandra	.. Non-collegiate student (Comilla Victoria College).
	Debgoswami, Pranhari	.. Cooch Behar Victoria College.
	Kapur, Debidas	.. Burdwan Raj College.
110	Dhar, Amiya	.. Scottish Church College.
	„ Susital	.. Sylhet M. C. College.
	Fazlul Haque	.. Mymensingh A. M. College.
	Fazlul Karim	.. Non-collegiate student (Sylhet M. C. College).
	Gangopadhyay, Kalipada	.. Barisal Brajamohan College.
	George, Conrad	.. St. Joseph's College.
	Ghosh, Amulyakumar	.. Non-collegiate student (Contai P. K. College).
	„ Dhirendrakumar	.. Non-collegiate student (Berhampur Krishnath College).
	„ Gaurmohan	.. Vidyasagar College.
	„ Heramba chandra	.. Faridpur Rajendra College.
120	„ Hridayranjan	.. Bagerhat College.
	„ Jitendriya	.. Non-collegiate student (Vidyasagar College).
	„ Kamakhyacharan	.. Hughli College.
	„ Madanmohan	.. Midnapur College.
	„ Manindranath	.. Mymensingh A. M. College.
	„ Prabodhranjan	.. Vidyasagar College.
	„ Radharaman	.. Berhampur Krishnath College.
	„ Ranadaranjan	.. Mymensingh A. M. College.
	„ Sudhirkumar	.. City College.
	„ Sudhirkumar, I	.. Scottish Church College.
130	Gon, Praphullakumar	.. Ditto.
	Goswami, Satyaprakas	.. Non-collegiate student (Rangpur Carmichael College).
	„ Suryyakumar	.. Non-collegiate student (Vidyasagar College).
	Guha, Amulyakumar	.. Barisal Brajamohan College.
	„ Aruncha ndra	.. Non-collegiate student (Faridpur Rajendra College).
	„ Dwijendranath	.. Bangabasi College.
	„ Jyotischandra	.. Rangpur Carmichael College.
	Guharay, Amareschandra	.. Ditto.
	„ Usharani	.. Barisal Brajamohan College.
	Gupta, Susilkumar	.. Berhampur Krishnath College.
140	Hajarika, Bhabanath	.. Non-collegiate student (City College).
	Hossain Ali Khan	.. Karatia Saadat College.
	Howlader Abdul Karim	.. Ripon College.
	Intazuddin Ahmed	.. Mymensingh A. M. College.
	Jahirul Koyum Chaudhury	.. Chittagong College.
	Jones, Phoebe	.. Diocesan College
	Kar, Bibhutibhushan	.. Serampur College.
	Kazi Asadazzoman	.. Barisal Brajamohan College.
	Kazi Sultan Alam	.. Feni College.
	Kingsley	.. Gauhati Cotton College.
150	Kundu, Dhirendranath	.. Burdwan Raj College.
	„ Jogendranath	.. Rangpur Carmichael College.
	Lahiri, Haripada	.. City College.
	„ Saileschandra	.. Bangabasi College.
	Lala, Susilkumar	.. Hetampur Krishna Chandra College.
	Lodh, Kshirodmohan	.. Non-collegiate student (Comilla Victoria College).
	„ Kunjabihari	.. Feni College.
	Mahbubar Rahman Choudhury	.. Non-collegiate student (Islamia College).
	Mafizuddin Ahmed	.. Karatia Saadat College.
	Mahabur Rahaman Chowdhury	.. Barisal Brajamohan College.
160	Mahmud Ali	.. Sylhet M. C. College.
	Maiti, Jagadischandra	.. St. Paul's College.
	„ Syamapada	.. Bangabasi College.
	Maitra, Nareschandra	.. City College.
	„ Satyendrachandra	.. Vidyasagar College.
	Majir Uddin Ahmed	.. Sylhet M. C. College.
	Majumdar, Charuchandra	.. Bagerhat College.
	„ Jatindrakumar, II	.. Feni College.
	„ Karunamay	.. Gauhati Cotton College.
	„ Kumudranjan	.. Non-collegiate student (Roll Mym. N. 18).
170	„ Manmathanath	.. Mymensingh A. M. College.
	„ Manojmohan	.. Rangpur Carmichael College.
	„ Mohinimohan	.. Mymensingh A. M. College.
	„ Panchanan	.. Ripon College.
	„ Satyaprasad	.. Non-collegiate student (Ripon College).
	„ Surendrakumar	.. Feni College.
	Mallik, Bipinbihari	.. Non-collegiate student (Scottish Church College).
	„ Hansagopal	.. Vidyasagar College.
	Md. Abdul Kader	.. Barisal Brajamohan College.
	Md. Abdul Khaloque Mia	.. Pabna Edward College.
180	Md. Abdul Latiff Dhaly	.. Ripon College.
	Md. Abdul Waheed	.. City College.

	Md. Emdad Ali	.. Mymensingh A. M. College.
	Md. Farahat Ullah	.. Rajshahi College.
	Md. Helal Uddin Howlader	.. Barisal Brajamohan College.
	Md. Jasim Uddin Ahamad	.. Non-collegiate student (Rangpur Carmichael College).
	Md. Khadanewaz	.. Karatia Saadat College.
	Md. Lokman Ali	.. Mymensingh A. M. College.
	Md. Mafiz Uddin Mondal	.. Rangpur Carmichael College.
	Md. Shamsul Bari	.. Pabna Edward College.
190	Md. Sherajuddin	.. Barisal Brajamohan College.
	Md. Twaiful Huque	.. Chittagong College.
	Md. Yunusur Rahman	.. Non-collegiate student (Karatia Saadat College).
	Meer Habib Ali	.. Chittagong College.
	Misra, Satchidananda	.. Non-collegiate student (City College).
	Mitra, Haridas	.. Vidyasagar College.
	„ Subodhchandra	.. Scottish Church College.
	Moftal Hossain Talukder	.. Karatia Saadat College
	Mohammad Fazlar Rahman Shaikh	.. Rajshahi College.
	Motiur Rahman	.. Non-collegiate student (Comilla Victoria College).
200	Muhammad Fazlullah	.. Chittagong College.
	Muhammad Hasan	.. Feni College.
	Muhammed Idris	.. Mymensingh A. M. College.
	Mukerji, Mrinal	.. Diocesan College.
	Mukhopadhyay, Achalananda	.. Non-collegiate student (Vidyasagar College).
	„ Anadinath	.. Ripon College.
	„ Bholanath	.. Ditto.
	„ Hrishikes	.. Non-collegiate student (Ripon College).
	„ Kunjabihari	.. Scottish Church College.
	„ Saileschandra	.. Non-collegiate student (Daulatpur Hindu Academy).
210	„ Susilkumar	.. Hughli College.
	„ Tarakanta	.. Vidyasagar College.
	Mustaphi, Amiyakumar	.. Hughli College.
	Marak, Raising K.	.. Serampur College.
	Marcellni, Viola	.. Non-collegiate student (Roll Cal. F. N. 44).
	Nag, Nilima	.. Non-collegiate student (Roll Gau. F. N. 3).
	„ Nirmalranjan	.. City College.
	„ Prabodhchandra	.. Daulatpur Hindu Academy.
	Nanda, Khagendranath	.. Contai P. K. College.
	Nandi, Niharranjan	.. Non-collegiate student (Ripon College).
220	Nazirul Haque	.. Barisal Brajamohan College.
	Nagendra Prasad Shribastaw	.. Non-collegiate student (Vidyasagar College).
	Niog, Bineswar	.. Gauhati Cotton College.
	Niyogi, Abanibhushan	.. City College.
	Obaider Rahman Chowdhury	.. Faridpur Rajendra College.
	Pal, Birendranath	.. Non-collegiate student (Dulatpur Hindu Academy).
	„ Rajendrakumar	.. Feni College.
	Palchaudhuri, Birendranath	.. City College.
	„ Chittabinod	.. Non-collegiate student (Comilla Victoria College).
	Purkayastha, Abanikumar	.. Non-collegiate student (Sylhet M. C. College).
230	„ Kumudranjan	.. Sylhet M. C. College.
	Ramchandra Tewary	.. Vidyasagar College.
	Ray, Amulyaratan	.. Pabna Edward College.
	„ Annadabhushan	.. Non-collegiate student (Daulatpur Hindu Academy).
	„ Bimalkumar	.. Non-collegiate student (Scottish Church College).
	„ Dwijeschandra	.. Pabna Edward College.
	„ Jagadindramohan	.. Hughli College.
	„ Madhabchandra	.. Feni College.
	„ Rathindranath	.. Non-collegiate student (Vidyasagar College).
	„ Sasankasekhar	.. Non-collegiate student (Burdwan Raj College).
240	„ Subodhchandra	.. Vidyasagar College.
	„ Sudhirkumar	.. Comilla Victoria College.
	„ Sukharanjan	.. Barisal Brajamohan College.
	„ Surendranath	.. Non-collegiate student (Rajshahi College).
	Raychaudhuri, Bhikharisankar	.. Rangpur Carmichael College.
	Sadhya, Arunendranath	.. Vidyasagar College.
	Saha, Jaladhar	.. Non-collegiate student (Comilla Victoria College).
	„ Kalidas	.. Vidyasagar College.
	„ Rebatimohan	.. Rangpur Carmichael College.
	„ Sudhansusekhar	.. Non-collegiate student (Vidyasagar College).
250	„ Surendranath	.. Berhampur Krishnath College.
	Samajdar, Rampada	.. Cooch Behar Victoria College.
	Sanyal, Ganendranarayan	.. Non-collegiate student (Rajshahi College).
	„ Sukreswar	.. Rangpur Carmichael College.

	Sarkar, Jagannathprasad	.. Non-collegiate student (Rajshahi College).
	,, Kasinath	.. Non-collegiate student (Bangabasi College).
	,, Krishnadas	.. Vidyasagar College.
	,, Pranabkumar	.. Faridpur Rajendra College.
	,, Surendranath	.. Pabna Edward College.
	,, Susantakumar, I	.. Ditto.
260	Sarma, Surendranath	.. Gauhati Cotton College.
	Saw Bayin	.. Scottish Church College.
	Sayudul Hasan	.. Islamia College.
	Sen, Anathbandhu	.. Non-collegiate student (Vidyasagar College).
	,, Aswinikumar	.. Bagerhat College.
	,, Bela	.. Non-collegiate student (Roll Cal. F. N. 69).
	,, Binapani	.. Non-collegiate student (Gauhati Cotton College).
	,, Dhirendranath	.. Asutosh College).
	,, Sudhansubhushan	.. Daulatpur Hindu Academy.
	Sengupta, Asa	.. Non-collegiate student (Roll Cal. F. N. 6).
270	,, Atulyacharan	.. Ripon College.
	,, Kalipada	.. Non-collegiate student (Barisal Brajamohan College).
	,, Nikunjaranjan	.. Non-collegiate student (B. M. College, Barisal).
	,, Santiranjan	.. Barisal Brajamohan College.
	,, Sudhirranjan	.. Bagerhat College.
	Shaikh Mafzul Ahmad	.. Ditto.
	Shaikh Mujibur Rahman	.. St. Xavier's College.
	Sil, Jatindramohan	.. Feni College.
	Sinha, Dakshinaranjan	.. Cooch Behar Victoria College.
	,, Sanatkumar	.. City College.
280	Sukul, Krishnakisor	.. Comilla Victoria College.
	Sutradhar, Surendrakumar	.. Sylhet M. C. College.
	Syed Ali Ahamed	.. Mymensingh A. M. College.
	Syed Azhorul Islam	.. Non-collegiate student (Karatia Saadat College).
	Syed Bodiozzuman	.. Ditto.
	Syed Nawab Hussain	.. Feni College.
	Swarnakar, Srishtidhar	.. Non-collegiate student (Burdwan Raj College).
287	Talukdar, Subodhchandra	.. Non-collegiate student (Presidency College).

The undermentioned candidates who were allowed to appear at the I. A. Examination, 1931, in one or two subjects only are declared to have passed in the subject or subjects under which their names appear :—

ENGLISH AND BENGALI.

Supriti Majumdar	.. Non-collegiate student (Roll Cal. F. N. 77).

LOGIC.

Dam, Apurbakrishna	.. Non-collegiate student (Vidyasagar College).

The examinations of the following candidates are cancelled for using unfair means in the Examination Hall and for gross misconduct. Additional punishment, if any, imposed is noted against the name of each :—

Name with Roll No. and College.	Order.
1. Byomkesial Ghosh (Regtd. No. 5261 of 1929-30), Cal. 754, Vidyasagar College.	The examination of the candidate for 1931 is cancelled and the candidate is debarred from appearing at any examination of this University in 1932.
2. Amiyabhushan Majumdar (Regtd. No. 4470 of 1929-30), Cal. 1023, Vidyasagar College.	The examination of the candidate for 1931 is cancelled.
3. Rameshwar Lal (Regtd. No. 1608 of 1925-26), Cal. 1035, Vidyasagar College.	The examination of the candidate for 1931 is cancelled and the candidate is debarred from appearing at any examination of this University in 1932.

	Name with Roll No. and College.	Order.
4.	Kshitinath Das (Regtd No. 3871 of 1929-30), Cau. 24, Gauhati Cotton College.	The examination of the candidate for 1931 is cancelled and the candidate is debarred from appearing at any examination of this University in 1932.
5.	Nirmalchandra Guha (Regtd No. 4810 of 1929 30), Bar 27, Barisal B. M College.	The examination of the candidate for 1931 is cancelled.
6.	Jitendrakumar Dasgupta (Regtd No 6440 of 1928-29), Bar 97, Barisal B M College.	Ditto.
7.	Nitendranath Ghosh (Regtd No. 4800 of 1929 30), Bar. N. 17, Barisal B M College (Non-collegiate student).	Ditto.
8.	Chittaranjan Sengupta (Regtd. No 1104 of 1929 30), Bur. 34, Burdwan Raj College	The examination of the candidate for 1931 is cancelled and the candidate is debarred from appearing at any examination of this University in 1932.
9.	Bimalananda Roychaudhuri (Regtd No. 5484 of 1930-31), Bur N 28, Non-collegiate student	Ditto.
10.	Birendralal Nandi (Regtd. No. 3074 of 1928 29), Chi. N 11, Comilla Victoria College (Non-collegiate student).	The examination of the candidate for 1931 is cancelled.
11	Prankumar Bhaumik (Regtd No. 2824 of 1929 30), Com. 13, Comilla Victoria College	The examination of the candidate for 1931 is cancelled and the candidate is debarred from appearing at any examination of this University in 1932.
12.	Manindranath Rakshit (Regtd No. 660 of 1928 29), Com. 35, Comilla Victoria College.	Ditto.
13.	Tejendralal Das (Regtd. No. 583 of 1928-29), Feni 8, Feni College.	The examination of the candidate for 1931 is cancelled.
14.	Mohammed Sherajul Hoque (Regtd No. 2204 of 1925-26), Feni 91, Feni College.	Ditto
15.	Sailendrakumar Ray (Regtd. No. 4828 of 1928-29), Feni 38, Feni College.	Ditto.
16.	Jatindranath Maiti (Regtd. No. 3675 of 1929-30), Mid. N. 6 Contai P. K. College (Non-collegiate student).	The examination of the candidate for 1931 is cancelled and the candidate is debarred from appearing at any examination of this University in 1932.
17.	Byomkes Bhattacharyya (Regtd. No. 6021 of 1928-29), Mym. 50, Mymensingh A. M. College.	The examination of the candidate for 1931 is cancelled.
18.	Lalitmohan Modakbhuiya (Regtd. No. 4494 of 1929-30), Com. 114, Vidyasagar College.	The examination of the candidate for 1931 is cancelled and the candidate is debarred from appearing at any examination of this University in 1932.
19	Sisirkumar Chakrabarti (Regtd. No. 393 of 1929 30), I. A. Roll Com 17, Comilla Victoria College.	The examination of the candidate for 1931 is cancelled.
20.	Khagendrachandra Dharchaudhuri (Regtd No. 465 of 1929-30), I. A. Roll Com. N 19, (Non collegiate Student), Comilla Victoria College	Ditto.

N SEN,

Controller of Examinations.

State Medical Faculty of Bengal.

NOTIFICATION.

The 12th June 1931.

No. 1300F.—The undermentioned candidates are declared to have passed the Final Membership Examination of the Faculty held in May 1931 :—

(Arranged in alphabetical order.)

Military Medical Pupil.

Burnett, Denis John.

Medical College, Calcutta.

Chattopadhyay, Sudhirkrishna.

Carmichael Medical College, Belgatchia.

Ghosh, Sudhirranjan.

Medical College, Calcutta.

Md. Shamsul Huda.
Muhammad Aref.
Nasiruddin Ahmed.

II. The undermentioned candidate is declared to have passed the Final Membership Examination held in May 1931 in Part II only :—

Medical College, Calcutta.

Mukhopadhyay, Debabrata.

ADDENDUM.

The 30th June 1931.

No. 1308F.—In addition to the list of candidates declared to have passed the Intermediate Licentiateship Examination of the Faculty held in April 1931, published in the *Calcutta Gazette*, dated the 11th June 1931, the undermentioned candidate is also declared to have passed the Intermediate Licentiateship Examination :—

Lytton Medical School, Mymensingh.

Sen, Saileschandra.

R. M. DAS,
Secretary, State Medical Faculty of Bengal.

Orders by the Vice-Chancellor and Syndicate of the Calcutta University.

NOTICE.

Senate House, the 2nd July 1931.

The Onauth Nauth Deb Research Prize for the year 1931 has been awarded to the following candidate. The subject of his thesis submitted to and approved by the Board of Examiners is stated below :—

Mr. Wahed Hossain, B.L.

Subject of his thesis.

"Theory of Sovereignty in Islam."

N. SEN,
Controller of Examinations.

ERRATA.

Central Madrasah Examination Board, 1931.

Calcutta, the 6th July 1931.

In continuation of the list of successful candidates published in the *Calcutta Gazette*, dated the 25th June 1931, the undermentioned candidate is declared to have passed the Alim (Senior 2nd Year) Examination of the Central Madrasah Examination Board held in April 1931 :—

SECOND DIVISION.

Noakhali Centre.

Madrasa-i-Karamatia, Noakhali.

Roll No.	Name.	Age on 31st March 1931. Y.	M.
502	Muhammad Baharatullah ..	20	6

In continuation of the list of successful candidates published in the *Calcutta Gazette*, dated the 25th June 1931, the undermentioned candidates are declared to have passed the Alim (Senior 2nd Year) Examination with English of the Central Madrasah Examination Board held in April 1931 :—

THIRD DIVISION.

Calcutta Centre.

Calcutta Madrasah.

Roll No.	Name.
50	Muhammad Azizul Haq (with English).
58	Saifuddin Ahmad (with English).

M. HIDAYET HOSAIN,
Registrar, Central Madrasah Examination Board, and Principal, Calcutta Madrasah.

NOTIFICATION.

Examination in the Art of Teaching, Burdwan Division.

Chinsura, the 29th June 1931.

An examination in the Art and Practice of Teaching for teachers of English subjects in Boys' Secondary Schools (aided and unaided) will be held at the Hooghly Training School, on Monday, the 7th September 1931, at 11 a.m., and on the following date, if necessary. The examination of teachers of vernacular subjects and oriental classical languages of the same schools will also be held on the same date and at the same place and hour.

2. The following teachers are eligible for the examinations :—

(*a*) Teachers of English subjects, who have passed (*i*) the Matriculation or some higher University Examination, or (*ii*) the Middle English Scholarship Examination or the terminal examination at the end of the middle stage of instruction. The examination of these teachers will be conducted in English.

(*b*) Teachers of vernacular subjects, who have passed the same examinations, or the Middle Vernacular Scholarship Examination, or the terminal examination at the end of the middle stage of instruction. The examination of these teachers will be conducted in vernacular.

(*c*) Pandits and Maulvis employed in teaching an oriental classical language other than Pandits in Sanskrit *tols* and Maulvis in Madrasahs. They must have passed the Sanskrit Title Examination or the Final Examination of a Senior Grade Madrasah. The examination in the case of these classes of teachers will be conducted either in English or vernacular at the option of the candidate.

3. The examination will consist of—

(*a*) A practical examination in class control, the candidate being required to keep a class of at least a dozen boys attentive and fully occupied throughout a lesson.

(*b*) A practical test of teaching ability, the candidate being required to give two lessons on any two of the subjects—English, Bengali, Sanskrit, Arabic, Persian, Urdu, History, Geography, Arithmetic, Algebra, Geometry, etc.

(*c*) An oral examination, in which the Inspector of Schools or other examiner will ask questions on the Art of Teaching, object lessons, class management, organisation and discipline.

4. The following books are recommended for study by the candidate:—

(*a*) For teachers of English subjects—

(1) Indian Teachers' Guide, by P. Wren, (2) Indian School Organisation, by P. Wren, (3) Suggestions for the consideration of Teachers (Board of Education, Whitehall), (4) Talks to Teachers (James), (5) Art of Teaching by D. Salmon, (6) Direct Method by Tate and Rajagopalchari.

(*b*) For teachers of vernacular subjects—

(1) বিবিধ বিধান by A. N. Adhikari, (2) Teachers' Manual by Khan Bahadur Ihsanullah, (3) পাঠটীকা লিখিবার পদ্ধতি by Jagannath Dey, (4) মনোবিজ্ঞান by S. C. Brahmachary, (5) ভূগোল শিক্ষা প্রণালী by I. Haque.

(*c*) Teachers of oriental classical languages may study any of the above sets of books.

5. Intending candidates from High Schools should submit their applications through the Headmasters and teachers of Middle Schools and Junior Madrasahs through the District Inspectors, so as to reach this office *not later than the 23rd August 1931*. Every candidate will produce at the time of the examination the certificate of his having passed the University or other examination, which admits him to the present examination. The following information should accompany the application:—

(1) Name (in full).

(2) Name of father (in full).

(3) Names of native village and district.

(4) Last examination passed.

(5) Year of passing.

(6) Period of service as a teacher.

(7) Present appointment with date (mention whether he is a teacher of English subjects or vernacular subjects or of oriental languages).

(8) Two class subjects in which he wishes to be examined.

(9) Signature of applicant with full address.

6. Every candidate must bring with him at the time of examination two lesson notes on the subjects in which he wishes to give lessons. These notes should be made over to the examiner at the time of the practical examination.

7. Candidates should state whether they sat for the examination previously; if so, how often, giving dates.

K. C. RAY,

Inspector of Schools, Burdwan Division.

The Calcutta Gazette

THURSDAY, JULY 9, 1931.

Part II

Advertisements.

Notices.

Advertisements, Notices, etc., intended for insertion in this Part of the Gazette cannot be received after noon of Saturday.

IMPERIAL BANK OF INDIA.

Statement of the affairs of the Imperial Bank of India on the 26th June 1931.

LIABILITIES.

	Rs.	A.	P.
Subscribed Capital ..	11,25,00,000	0	0
Capital paid up ..	5,62,50,000	0	0
Reserve ..	5,40,00,000	0	0
Public Deposits ..	16,35,16,000	0	0
Other Deposits ..	64,55,98,000	0	0
Loans against securities per contra ..	....		
Loans from the Government of India under section 20 of the Paper Currency Act, against Inland bills discounted and purchased per contra ..	....		
Contingent liabilities ..	....		
Sundries ..	2,16,46,000	0	0
	94,10,10,000	0	0

ASSETS.

	Rs.	A.	P.
Government Securities ..	28,14,81,000	0	0
Other authorized securities under the Act ..	2,64,74,000	0	0
Ways and Means Advances to the Government of India ..	....		
Loans ..	8,88,93,000	0	0
Cash Credits ..	29,20,41,000	0	0
Inland bills discounted and purchased ..	3,18,61,000	0	0
Foreign bills discounted and purchased ..	35,15,000	0	0
Bullion ..	....		
Dead stock ..	2,75,47,000	0	0
Liability of constituents for contingent liabilities per contra ..	....		
Sundries ..	1,47,25,000	0	0
Balances with other Banks ..	18,15,000	0	0
	76,83,52,000	0	0
Cash ..	17,26,58,000	0	0
	94,10,10,000	0	0

The above balance sheet includes :—

	£
Deposits in London ..	867,800
Advances and Investments in London ..	791,400
Cash and balances at other Banks in London ..	136,700

Percentage 20·78.

Bank rate 6 per cent.

OSBORNE A. SMITH,
Managing Governor.

(1406—1)

Sale Notification.

In the 1st Court of the Munsif, Satkhira.

RENT EXECUTION CASE No. 868 OF 1930.

Munshi Zakatullah Biswas, decree-holder,

versus

Shaikh Amanatullah Choudhury, judgment-debtor.

Claim Rs. 224-3 as.

THE right, title and interest of the judgment-debtor to the extent of 1 ganda 2 kags 2 dantis 2 krantis share out of the 16 as. share of tauzi No. 127 of the Khulna Collectorate paying the annual revenue of Rs. 14,781-4-11, which has been separated in tauzi No. 127/14 old and 127/1310 new, will be sold in public auction by the Nazir of the Court at Court's sale house on the 17th day of August 1931 at noon for realisation of the claim Rs. 224-3 as.

A. N. LAHIRI, Munsif.

Satkhira, the 19th June 1931. (1336—1)

In the High Court of Judicature at Fort William in Bengal, in Insolvency.

NOTICE OF ADJUDICATION ORDER.

No. 150 OF 1931.

Re Robert Howden Kay, residing at No. 1A, Loudon Street, in the town of Calcutta, employed as an assistant at Messrs. Smith Stanistreet & Co., Limited, 18, Convent Road, Entally, *ex parte* the debtor in person.

ON the 18th day of June 1931, an order was made by the High Court of Judicature at Fort William in Bengal in its insolvency jurisdiction adjudging the abovenamed an insolvent.

Note.—All debts due to the estate should be paid to me.

Dated this 26th June 1931.

G. M. FALKNER, Official Assignee.

In the High Court of Judicature at Fort William in Bengal, in Insolvency.

NOTICE OF ADJUDICATION ORDER.

No. 151 OF 1931.

Re Richard Frederick Pendrill, lately residing at 43, European Asylum Lane, but at present residing at No. 69, Lower Circular Road, in the town of Calcutta, unemployed, *ex parte* the debtor in person.

ON the 19th day of June 1931, an order was made by the High Court of Judicature at Fort William in Bengal in its insolvency jurisdiction adjudging the abovenamed an insolvent.

NOTE.—All debts due to the estate should be paid to me.

Dated this 26th day of June 1931.

G. M. FALKNER, Official Assignee.

In the High Court of Judicature at Fort William in Bengal, in Insolvency.

NOTICE OF ADJUDICATION ORDER.

No. 152 OF 1931.

Re Sriram Shah, residing at No. 58, Clive Street, in the town of Calcutta, and lately carrying on business as a grocer under the name and style of Sriram Mahadeo at No. 159, Mechuabazar Street, in Calcutta aforesaid, at present without employment, *ex parte* the debtor in person.

ON the 20th day of June 1931, an order was made by the High Court of Judicature at Fort William in Bengal in its insolvency jurisdiction adjuding the abovenamed as an insolvent.

NOTE—All debts due to the estate should be paid to me.

Dated this 26th day of June 1931.

G. M. FALKNER, Official Assignee.

In the High Court of Judicature at Fort William in Bengal, in Insolvency.

No. 187 of 1929.

Re Jadunath Prosad, insolvent.

Ex parte Jokhulal Ramchariterial, creditors

TAKE notice that on the 22nd day of July 1931 at 11 o'clock in the forenoon or so soon thereafter as the application can be hard this Court will be moved before the learned Registrar-in-Insolvency on behalf of the said creditors Messrs. Jokhulal Ramchariterial for an order that the adjudication order made herein and dated the 23rd September 1929 be annulled and that the costs incidental to this application be paid by the said Jadunath Prosad, and/or the Official Assignee out of the estate of the said insolvent. And take notice that on the hearing of this motion it is intended to use in evidence against you, the said Jadunath Prosad, an affidavit sworn herein on 23rd June 1931 by Gaya Prosad, a copy whereof is served upon you together with this notice of motion.

Dated this 23rd day of June 1931.

G. BAGARIA.

1. To the Insolvent Jadunath Prosad and his attorney Mr. S. M. Dutt, 5, Hasting Street.
2. To the Official Assignee of Calcutta and the assignee of the estate of Jadunath Prosad.

N.B. You need not appear if you have no good cause to show to the contrary.

(1335 1—1380)

ORDER ANNULLING ADJUDICATION.

Section 35 of the Provincial Insolvency Act, V of 1920.

In the Court of the District Judge at Chittagong.

INSOLVENCY APPLICATION No. 8 OF 1930.

(1) Surya Kanta Chakraborty, (2) Krishna Kanta Chakraborty, sons of late Ganesh Chandra Chakraborty, of Nalua, police-station Satkania, Chittagong, applicants.

THE applicants not having applied for discharge by the date fixed by the Court, it is ordered that the order of adjudication, dated 6th November 1930, against (1) Surya Kanta Chakraborty, (2) Krishna Kanta Chakraborty, of Nalua, be and the same is hereby annulled.

Dated this 6th day of May 1931.

J. YOUNIE, District Judge.
(1194—1)

ORDER ANNULLING ADJUDICATION.

Section 35 of the Provincial Insolvency Act, V of 1920.

In the Court of the District Judge at Chittagong.

INSOLVENCY APPLICATION No. 33 OF 1930.

Amir Hosen, son of late Chibatulla, of Shillock, police-station Rangunia, Chittagong, applicant.

THE applicant not having applied for discharge by the date fixed by the Court, it is ordered that the order of adjudication, dated 28th November 1930, against Amir Hosen of Shillock, be and the same is hereby annulled.

Dated this 1st day of June 1931.

J. YOUNIE, District Judge.
(1195—1)

NOTICE TO CREDITORS OF APPLICATION FOR DISCHARGE.

Section 41(*1*) of the Provincial Insolvency Act, V of 1920.

In the Court of the District Judge at Chittagong.

INSOLVENCY CASE No. 44 OF 1929.

Gopal Krishna Rudra Pal, son of Rasick Chandra Rudra Pal, of Hogla, known as Kartikpur, police-station Vedergunj, district Faridpur, at present Firingi Bazar, Chittagong, applicant.

TAKE notice that the abovenamed insolvent has applied at the Court for his discharge, and that the Court has fixed the 29th day of August 1931, at 10 o'clock, for hearing the application.

Dated this 15th day of June 1931.

J. YOUNIE, District Judge.
(1284—1—1405)

In the Court of the District Judge of Dacca.

INSOLVENCY CASE No. 22 OF 1931.

Kali Charan Madak, petitioner.

WHEREAS Kali Charan Madak, son of late Roghunath Madak, resident of Satirpara, police-station Narsingdi, district Dacca, has applied to this Court for being adjudged an insolvent, the 22nd July 1931 next has been fixed for the hearing of the aforesaid petition, examination of the petitioner and the creditors.

A. HENDERSON, District Judge.

Dacca, the 22nd June 1931. (1347—1)

In the Court of the District Judge of Dacca.

INSOLVENCY CASE No. 23 OF 1931.

Baikuntha Chandra Madak, petitioner.

WHEREAS Baikuntha Chandra Madak, son of late Roghunath Madak, resident of Satirpara, police-station Narsingdi, district Dacca, has applied to this Court for being adjudged an insolvent, the 22nd July 1931 next has been fixed for the hearing of the aforesaid petition, examination of the petitioner and the creditors.

A. HENDERSON, District Judge.

Dacca, the 22nd June 1931. (1348—1)

In the Court of the District Judge of Dacca.

INSOLVENCY CASE No. 24 OF 1931.

Ganga Charan Madak, petitioner.

WHEREAS Ganga Charan Madak, son of late Roghunath Madak, resident of Satirpara, police-station Narsingdi, district Dacca, has applied to this Court for being adjudged an insolvent, the 22nd July 1931 next has been fixed for the hearing of the aforesaid petition, examination of the petitioner and the creditors.

A. HENDERSON, District Judge.

Dacca, the 22nd June 1931. (1349—1)

In the 3rd Court of the Sub-Judge, Dacca.

Section 41 of the Provincial Insolvency Act.

INSOLVENCY CASE No. 38 OF 1930.

Seta Nath Saha, son of late Gour Sundar Saha, resident of Malikanda, police-station Dohar, district Dacca, debtor-petitioner.

THE above petitioner (insolvent) has applied to this Court for his discharge and the Court has fixed the date on 25th July 1931 at 11 o'clock for hearing the application.

S. C. SIL, Senior Sub-Judge.

Dacca, the 26th June 1931. (1392—1)

In the Court of the District Judge of Dacca.

INSOLVENCY CASE No. 7 OF 1931.

WHEREAS Brindabon Chandra Saha, son of late Laksmi Kanta Saha, resident of Dalbhog, police-station Srinagar, district Dacca, has applied to this Court for being adjudged an insolvent, the 25th July 1931 next has been fixed for the hearing of the aforesaid petition, examination of the petitioner and the creditors.

A. HENDERSON, District Judge.

Dacca, the 26th June 1931. (1393—1)

In the Court of the District Judge of Dacca.

INSOLVENCY CASE No. 8 OF 1931.

WHEREAS Nikunja Lal Saha, son of late Laksmi Kanta Saha, resident of Dalbhog, police-station Srinagar, district Dacca, has applied to this Court for being adjudged an insolvent, the 25th July 1931 next has been fixed for the hearing of the aforesaid petition, examination of the petitioner and the creditors.

A. HENDERSON, District Judge.

Dacca, the 26th June 1931. (1394—1)

In the Court of the District Judge of Dinajpur.

INSOLVENCY CASE No. 48 OF 1931.

HANSA MAHAMMAD, son of late Mada Mistri, resident of village Hossainpur, police-station Kotwali, district Dinajpur, has applied for being adjudged insolvent. The 16th day of July 1931 has been fixed for examination of the petitioner at Dinajpur.

J. N. MUKHARJI, Addl. District Judge in charge.

Dinajpur, the 29th June 1931. (1401—1)

In the Court of the District Judge of Darjeeling.

INSOLVENCY CASE No. 49 OF 1931.

WANG CHUK BHOTIA, resident of Kalimpong, has applied for being adjudged insolvent. The 20th day of July 1931 has been fixed for examination of the petitioner at Darjeeling.

J. N. MUKHARJI, Addl. District Judge in charge.

Dinajpur, the 29th June 1931. (1402—1)

In the Court of the District Judge of Faridpur.

INSOLVENCY CASES Nos. 5 AND 6 OF 1924.

Sadhu Charan Saha Poddar and others of Nayakandi Ganganagar, police-station Palong, creditor-petitioners,

versus

(1) Ananta Kumar Saha, son of late Hari Mohan Saha (in case No. 5), and (2) Ananda Chandra Saha, son of late Kalachand Saha (in case No. 6), of Nayakandi Ganganagar, police-station Palong, debtor-opposite parties.

NOTICE is hereby given that the abovenamed debtors, who were adjudged insolvents by an order of this Court, dated the 13th August 1924, have applied for their final discharge under section 41 of the Provincial Insolvency Act, and 18th July 1931 has been fixed for hearing of their application.

A. N. SEN, District Judge.

Faridpur, the 24th July 1931. (1339—1)

In the Court of the District Judge of Hooghly.

NOTICE is hereby given, under clause (2) of section 12 of the Provincial Insolvency Act, V of 1920, to his creditors that the insolvency petition of Mohini Jana, son of late Baloram Jana, of Champdany, thana Bhadreswar, district Hooghly, has been admitted by this Court as No. 39 of 1931 and that the 21st July 1931 has been fixed for the hearing thereof.

S. SEN, District Judge.

Chinsura, the 23rd June 1931. (1395—1—1403)

In the Court of the District Judge of Khulna.

INSOLVENCY CASE No. 5 OF 1930.

TAKE notice that Nalin Krishna De, son of late Syama Charan De, of Dakshindihi, police-station Phultala, district Khulna, the insolvent in the above case, has applied for discharge and the Court has fixed 11th July 1931 for hearing of the application.

E. S. SIMPSON, District Judge.

Khulna, the 26th June 1931. (1374—1)

In the Court of the District Judge of Khulna.

INSOLVENCY CASE No. 6 OF 1930.

TAKE notice that Raijaddi Sheikh, son of late Nijamaddi Sheikh, of Srirampur, police-station Khulna, has been adjudged as insolvent on 4th June 1931. He is to pray for discharge within six months from that date.

E. S. SIMPSON, District Judge.

Khulna, the 26th June 1931. (1375—1)

In the Court of the Addl. Sub-Judge, Malda.

INSOLVENCY CASE No. 12 OF 1930.

NOTICE is hereby given that Amrit Sarnakar of Baluachara, police-station Kaliachak, district Malda, has applied under Act V of 1920 for his discharge and that 10th July 1931 is fixed for hearing the application.

N. N. GUHA, Addl. Sub-Judge.

Malda, the 30th June 1931. (1435—1)

ORDER OF ADJUDICATION.

Section 27 of the Provincial Insolvency Act, V of 1920.

In the Court of the District Judge of Pabna and Bogra.

INSOLVENCY CASE No. 67 OF 1930.

Re Radha Krishna Saha, son of late Adyat Chandra Saha, of Ghoshganti, police-station Ullapara, district Pabna, debtor-applicant.

ON the 19th day of June 1931, an order was made by the District Judge of Pabna and Bogra in its insolvency jurisdiction adjudging the abovenamed debtor an insolvent. He shall apply for his discharge within a year.

R. B. BANERJI, Sub-Judge in charge.

Pabna, the 26th June 1931. (1377—1)

ORDER OF ADJUDICATION.

Section 27 of the Provincial Insolvency Act, V of 1920.

In the Court of the District Judge of Pabna and Bogra.

INSOLVENCY CASE No. 22 OF 1931.

Re Ananta Lal Pal, son of late Mathura Kanta Pal, of Chandpur, police-station Kamarkhand, district Pabna, debtor-applicant.

ON the 18th day of June 1931, an order was made by the District Judge of Pabna and Bogra in its insolvency jurisdiction adjudging the abovenamed debtor an insolvent. He shall apply for his discharge within a year.

R. B. BANERJI, Sub-Judge in charge.

Pabna, the 26th June 1931. (1378—1)

In the Court of the District Judge of Rajshahi.

INSOLVENCY CASE No. 85 OF 1930.

NOTICE is hereby given that Hasimuddin Mondal of Ramchandrapur, police-station Nawabganja, district Malda, has been adjudicated an insolvent by this Court on 28th October 1930 and directed to come up for his discharge within six months.

G. G. HOOPER, District Judge.

Rajshahi, the 20th June 1931. (1324—1—1375)

In the Court of the District Judge of Rajshahi.

INSOLVENCY CASE No. 31 OF 1931.

NOTICE is hereby given that Bideshi Mondal of Chanpukuria, police-station Niamatpur, district Rajshahi, has applied under Act V of 1920 to be adjudicated an insolvent and that 22nd July 1931 is fixed for hearing the application.

G. G. HOOPER, District Judge.

Rajshahi, the 19th June 1931. (1354—1—1376)

In the Court of the District Judge of Rajshahi.

INSOLVENCY CASE No. 131 OF 1930.

NOTICE is hereby given that Mohir Sonar of Mohanpur, police-station Bagmara, district Rajshahi, has been adjudicated an insolvent by this Court on 4th June 1931 and directed to come up for his discharge within six months.

G. G. HOOPER, District Judge.

Rajshahi, the 22nd June 1931. (1355—1—1377)

In the Court of the District Judge of Rangpur.

INSOLVENCY CASE No. 1 of 1931.

KHODA BAKSH MANDAL, son of late Atimullah Mandal, of Rowmari, police-station Rowmari, in the district of Rangpur, was on the 23rd day of June 1931 adjudged an insolvent by this Court. He should apply for final discharge within six months.

A. M. AHMAD, District Judge.

Rangpur, the 24th June 1931. (1343—1)

ORDER OF ADJUDICATION.

Section 27 of the Provincial Insolvency Act, V of 1920.

In the Court of the District Judge at Alipore.

INSOLVENCY APPLICATION No. 15 OF 1931.

PURSUANT to a petition, dated 10th March 1931, filed by Probodh Chandra Sen of 36, Dum Dum Road, Dum Dum, 24-Parganas, debtor, and on the application of the debtor himself and on reading his application and hearing his pleader, it is ordered that the debtor be and the said debtor is hereby adjudged insolvent.

It is further ordered that the debtor do apply for his discharge in twelve months from this date.

Dated this 9th day of June 1931.

R. R. GARLICK, District Judge.

(1309—1—1381)

ORDER OF ADJUDICATION.

Section 27 of the Provincial Insolvency Act, V of 1920.

In the Court of the District Judge at Alipore.

INSOLVENCY APPLICATION No. 18 OF 1931.

PURSUANT to a petition, dated 28th March 1931, filed by Kanta Prasad Missir and Baijnath Missir of Munshiganj, Kidderpore, 24-Parganas, debtors, and on the application of the debtors themselves and on reading their application and hearing their pleader, it is ordered that the debtors be and the said debtors are hereby adjudged insolvent.

It is further ordered that the debtors do apply for their discharge in twelve months from this date.

Dated this 9th day of June 1931.

R. R. GARLICK, District Judge.

(1310—1—1382)

ORDER OF ADJUDICATION.

Section 27 of the Provincial Insolvency Act, V of 1920.

In the Court of the District Judge at Alipore.

INSOLVENCY APPLICATION No. 4 OF 1931.

PURSUANT to a petition, dated 2nd February 1931, filed against Sham Sundar Das and Purna Sashi Mondal, proprietors of firm Sham Sundar Das Purna Sashi Mondal at Chanditola, Behala, 24-Parganas, debtors, and on the application of Haji Habil Haji Pirmohammad of 15, Amratola Lane, Calcutta, creditors, and on reading their application and hearing their pleader, it is ordered that the debtors be and the said debtors as firm and as individuals are hereby adjudged insolvent.

It is further ordered that the debtors do apply for their discharge in 12 months from this date.

Dated this 8th day of June 1931.

R. R. GARLICK, District Judge.

(1337—1—1386)

NOTICE TO CREDITORS OF APPLICATION FOR DISCHARGE.

Section 41(*f*) of the Provincial Insolvency Act, V of 1920.

In the Court of the District Judge at Alipore.

INSOLVENCY CASE No. 22 OF 1930.

Lalit Mohan Ghosh of 17, Dr. Rajendra Road, Bhowanipore, 24-Parganas, applicant.

TAKE notice that the abovenamed insolvent has applied at the Court for his discharge, and that the Court has fixed the 20th day of July 1931, at 11 o'clock, for hearing the application.

Dated this 22nd day of June 1931.

R. R. GARLICK, District Judge.

(1338—1—1387)

ORDER OF ADJUDICATION.

Section 27 of the Provincial Insolvency Act, V of 1920.

In the Court of the District Judge at Alipore.

INSOLVENCY APPLICATION No. 17 OF 1931.

PURSUANT to a petition, dated 25th March 1931, filed by Hari Mohan Chatterjee of Nangi, police-station Budge Budge, 24-Parganas, debtor, and on the application of the debtor himself and on reading his application and hearing his pleader, it is ordered that the debtor be and the said debtor is hereby adjudged insolvent.

It is further ordered that the debtor do apply for his discharge in twelve months from this date.

Dated this 15th day of June 1931.

R. R. GARLICK, District Judge.

(1346—1—1385)

In the 4th Court of the Sub-Judge of 24-Parganas.

INSOLVENCY CASE No. 223 OF 1931.

Nilmadhab Mandal of 91, Chingrighata Road, police-station Entally, district 24-Parganas, applicant.

To Hridoy Krishna Bose of 68, Lansdowne Road, police-station Ballygunge, district 24-Parganas, creditor.

ON the 20th day of June 1931 it was ordered that the matter of the petition of the applicant be heard on the 27th day of July 1931 and that the said applicant do attend to be examined by this Court on that date.

S. N. ROY, Sub-Judge.

Alipore, the 23rd June 1931. (1356—1—1388)

In the 4th Court of the Sub-Judge of 24-Parganas.

INSOLVENCY CASE No. 225 OF 1931.

Gopal Chandra Das of Nagerbazar, Dum-Dum Cantonment, district 24-Parganas, applicant.

To Sarbar Khan of 25, Barrackpore Trunk Road, and others, creditors.

ON the 20th day of June 1931 it was ordered that the matter of the petition of the applicant be heard on the 27th day of July 1931 and that the said applicant do attend to be examined by this Court on that date.

S. N. ROY, Sub-Judge.

Alipore, the 22nd June 1931. (1357—1—1389)

In the 4th Court of the Sub-Judge of 24-Parganas.

INSOLVENCY CASE No. 229 OF 1931.

Mathura Singh of 16, Barrackpore Trunk Road, police-station Chitpore, applicant.

To Ramnarain Marwari of Armani Street, Calcutta, and others, creditors.

ON the 20th day of June 1931 it was ordered that the matter of the petition of the applicant be heard on the 27th day of July 1931 and that the said applicant do attend to be examined by this Court on that date.

S. N. ROY, Sub-Judge.

Alipore, the 22nd June 1931. (1358—1—1390)

In the 4th Court of the Sub-Judge of 24-Parganas.

INSOLVENCY CASE No. 230 OF 1931.

Mahammad Ishaque of Nathuni Pardhi's house, Titagarh, district 24-Parganas, applicant.

To Narsing Das of 23, Garanhatta Street, Barrabazar, Calcutta, creditor.

ON the 19th day of June 1931 it was ordered that the matter of the petition of the applicant be heard on the 27th day of July 1931 and that the said applicant do attend to be examined by this Court on that date.

S. N. ROY, Sub-Judge.

Alipore, the 23rd June 1931. (1359—1—1391)

In the 4th Court of the Sub-Judge of 24-Parganas.

INSOLVENCY CASE No. 233 OF 1931.

Pearalal Lohar of Kanchlapara, police-station Manicktola, applicant.

To Dipa Ahir of Kanchlapara, Manicktola, and others, creditors.

ON the 20th day of June 1931 it was ordered that the matter of the petition of the applicant be heard on the 27th day of July 1931 and that the said applicant do attend to be examined by this Court on that date.

S. N. ROY, Sub-Judge.

Alipore, the 22nd June 1931. (1360—1—1392)

In the 4th Court of the Sub-Judge of 24-Parganas.

INSOLVENCY CASE No. 234 OF 1931.

C. J. Slade working as a fireman, E. B. Railway, applicant.

To Mahadeolal & Bros., of 1, Tikiapara Road, Howrah, and others, creditors.

ON the 20th day of June 1931 it was ordered that the matter of the petition of the applicant be heard on the 27th day of July 1931 and that the said applicant do attend to be examined by this Court on that date.

S. N. ROY, Sub-Judge.

Alipore, the 22nd June 1931. (1361—1—1393)

In the 4th Court of the Sub-Judge of 24-Parganas.

INSOLVENCY CASE No. 235 OF 1931.

Feru Shah of Chitpur, Churipara, police-station Chitpur, applicant.

To Kartick Teli of Chitpur, Churipara, and others, creditors.

ON the 20th day of June 1931 it was ordered that the matter of the petition of the applicant be heard on the 27th day of July 1931 and that the said applicant do attend to be examined by this Court on that date.

S. N. ROY, Sub-Judge.

Alipore, the 22nd June 1931. (1362—1—1394)

In the 4th Court of the Sub-Judge of 24-Parganas.

INSOLVENCY CASE No. 236 OF 1931.

Sovan Darji of 3, Ramkamal Street, Kidderpore, applicant.

To Sultan Khan of 12, Michael Dutt Street, Kidderpore, and others, creditors.

ON the 20th day of June 1931 it was ordered that the matter of the petition of the applicant be heard on the 27th day of July 1931 and that the said applicant do attend to be examined by this Court on that date.

S. N. ROY, Sub-Judge.

Alipore, the 23rd June 1931. (1363—1—1395)

NOTICE TO CREDITORS OF APPLICATION FOR DISCHARGE.

Section 41(*1*) of the Provincial Insolvency Act, V of 1920.

In the 4th Court of the Sub-Judge at Alipore.

INSOLVENCY CASE No. 264 OF 1930.

Mohendra Nath Das of 6-1, Ratan Babu's Road, Cossipore, 24-Parganas, applicant.

TAKE notice that the abovenamed insolvent has applied at the Court for his discharge, and that the Court has fixed the 20th day of July 1931 at 11 o'clock for hearing the application.

Dated this 18th day of June 1931.

S. N. ROY, Sub-Judge.

(1364—1—1396)

NOTICE TO CREDITORS OF APPLICATION FOR DISCHARGE.

Section 41(*1*) of the Provincial Insolvency Act, V of 1920.

In the 4th Court of the Sub-Judge at Alipore.

INSOLVENCY CASE No. 266 OF 1930.

Nani Lal Addya of 21, Puddapukur West Lane, police-station Watgunge, district 24-Parganas, applicant.

TAKE notice that the abovenamed insolvent has applied at the Court for his discharge, and that the Court has fixed the 27thday of July 1931 at 11 o'clock for hearing the application.

Dated this 22nd day of June 1931.

S. N. ROY, Sub-Judge.

(1365—1—1397)

NOTICE TO CREDITORS OF APPLICATION FOR DISCHARGE.

Section 41(*1*) of the Provincial Insolvency Act, V of 1920.

In the 4th Court of the Sub-Judge at Alipore.

INSOLVENCY CASE No. 280 OF 1930.

Kiran Chandra Dutta of 20, Tangra Road, thana Beliaghata, applicant.

TAKE notice that the abovenamed insolvent has applied at the Court for his discharge, and that the Court has fixed the 27th day of July 1931 at 11 o'clock for hearing the application.

Dated this 22nd day of June 1931.

S. N. ROY, Sub-Judge.

(1366—1 1398)

NOTICE TO CREDITORS OF APPLICATION FOR DISCHARGE.

Section 41(*1*) of the Provincial Insolvency Act, V of 1920.

In the 4th Court of the Sub-Judge at Alipore.

INSOLVENCY CASE No. 297 OF 1930.

Jagannath Bhowsingka of Kutighat, Baranagore, applicant.

TAKE notice that the abovenamed insolvent has applied at the Court for his discharge, and that the Court has fixed the 27th day of July 1931 at 11 o'clock for hearing the application.

Dated this 23rd day of June 1931.

S. N. ROY, Sub-Judge.

(1367—1—1399)

NOTICE TO CREDITORS OF APPLICATION FOR DISCHARGE.

Section 41(*1*) of the Provincial Insolvency Act, V of 1920.

In the 4th Court of the Sub-Judge at Alipore.

INSOLVENCY CASE No. 323 OF 1930.

Hem Chandra Sur of 2, Banamali Chatterjee Stree, Tala, police-station Chitpur, district 24-Parganas, applicant.

TAKE notice that the abovenamed insolvent has applied at the Court for his discharge, and that the Court has fixed the 20th day of July 1931 at 10-30 o'clock for hearing the application.

Dated this 22nd day of June 1931.

S. N. ROY, Sub-Judge.

(1368—1—1400)

NOTICE TO CREDITORS OF APPLICATION FOR DISCHARGE.

Section 41(*1*) of the Provincial Insolvency Act, V of 1920.

In the 4th Court of the Sub-Judge at Alipore.

INSOLVENCY CASE No. 329 OF 1930.

G. S. Rebeiro of 36, Fulbagan Road, police-station Entally, district 24-Parganas, applicant.

TAKE notice that the abovenamed insolvent has applied at the Court for his discharge, and that the Court has fixed the 20th day of July 1931 at 10-30 o'clock for hearing the application.

Dated this 20th day of June 1931.

S. N. ROY, Sub-Judge.

(1369—1—1401)

CHAPALA KANTA BHATTACHARYYA, B.A., B.L., intends to be enrolled as an Advocate, High Court.

(1222—4—1238)

KRISHNAPADA CHATTERJEE, B.L., intends to be enrolled as an advocate of the Calcutta High Court.

(1268—4—1278)

Public Service Commission (India).

APPLICATIONS are invited from statutory natives of India for two gazetted posts of Senior and Junior Agricultural Meteorologists on scales of pay of Rs. 600—50—800 and 400—50—600 respectively. Persons already in Government Service are eligible for appointment to the posts and their initial pay will be determined under Fundamental Rule 22. The candidates selected will be engaged on five-year contracts with a probationary period of one year in the first instance. Applicants not already in Government Service must possess a post-graduate degree of a recognized University in Physics, Mathematics, Chemistry or Agriculture. For those in Government service, experience in work connected with Agricultural Meteorology will count.

Further particulars and application forms may be obtained from the Secretary, Public Service Commission, Simla, not later than the 21st July 1931.

A. G. DIX, Secretary.

Simla, the 1st July 1931. (1425—1)

APPLICATIONS are invited for the temporary vacancy in the gazetted post of Entomologist under the Bengal Public Health Department for the present for one year from the 1st October 1931. The sanctioned scale of pay of the post is Rs. 250—25—500—50—750. Qualifications—A university degree in Science or Medicine with special training in Medical Entomology. Age not to exceed 40 years on the 1st October 1931. Canvassing disqualifies. Applications will be received not later than the 31st August by the Director of Public Health, Bengal, Writers' Buildings, Calcutta.

Office of the Inspectress of Schools, Dacca Circle.

APPLICATIONS are invited for the post of a clerk, office of the Assistant Inspectress of Schools, Rajshahi, Division (Rajshahi), or of that of the Assistant Inspectress of Schools, Chittagong Division (Chittagong), on a monthly pay of Rs. 35 in the grade of Rs. 35—35—40—2-2—60.

2. None need apply who has not passed the I.A. or I.Sc. Examination of the Indian Universities.

3. The applications must be in handwriting of the candidates and copies of University certificates, especially of the Matriculation and Intermediate Examinations, as also of certificates of good moral character from the colleges in which they have last educated must accompany the applications.

4. Preference will be given to Muhammadan candidates or candidates of backward and other communities with high University qualifications. Knowledge of typewriting is essential.

5. Applications will be received by the undersigned up to the 30th June 1931, inclusive.

M. V. WOODTHORPE,

Inspectress of Schools, Dacca Circle.

Ramna, Dacca, the 6th June 1931.

APPLICATIONS are invited for the post of Confidential Clerk and Stenographer under the District Magistrate of Faridpur on a scale of pay of Rs. 80—4—140—5—160 per mensem. Candidates must be capable of taking down shorthand notes from dictation at the rate of 120 words a minute. Preference will be given to graduates who have passed the final examination in shorthand from the Government Commercial Institute, Calcutta, and who have office experience. Applications with testimonials will be received by the undersigned up to the 31st July 1931. Selected candidates may be called for an interview.

A. C. DATTA, District Magistrate.

Faridpur, the 3rd July 1931.

APPLICATIONS are invited for the post of a Storekeeper, Bengal Engineering College, on Rs. 40—1—60. The applicants must have experience in Stores work. The selected candidate will be on probation for one year and shall furnish a cash security of Rs. 500.

Applications with copies of testimonials will be received up to 13th July by the Secretary, Governing Body, Bengal Engineering College, post-office Botanic Garden, Howrah.

CHAS. J. HENDERSON, Principal (offg.).

Sibpur, the 2nd July 1931.

WANTED a Typist for the office of the Inspectress of Schools, Dacca Circle, on Rs. 45 per mensem and in the scale of Rs. 45—5/2—70. No one need apply who has not at least passed the Matriculation Examination and can type accurately at a very high speed. Preference will be given to a candidate who has passed the Government Commercial Shorthand Typewriting Examinations at a speed of 100 or 75 words per minute, respectively, and has had also considerable experience in office work. The applications with copies of testimonials and University certificates should reach the undersigned on or before the 10th July 1931.

M. V. WOODTHORPE, Inspectress of Schools,

Dacca Circle.

Notice.

SEALED tenders are invited in the open market for a loan of Rs. 40,000 by the District Board of Faridpur for raising and widening the Faridpur Bazar bridge under section 50 of the Bengal Local Self-Government Act on the security of the District Fund of Faridpur which is held under Act III (B.C.) of 1885. The fund consists of Road and Public Works Cess of the district, Government grants and other miscellaneous receipts and it is under the custody of the Collector of Faridpur. The raising of loan has been duly sanctioned by the Government of Bengal in their letter No. 78 T.P.H., dated the 23rd May 1931. The loan shall bear an interest not exceeding 8 per cent. per annum and it shall be repaid in ten equal annual instalments, each payable on the 15th June each year till the loan is paid off. Tenders offering the lowest rate of interest will be given preference.

Tenders will be received by the undersigned up to the 15th July 1931.

A. CHOWDHRY (KHAN BAHADUR), M.L.C.,

Chairman, District Board.

Faridpur, the 26th June 1931. (1372—2)

THE Bengal and Madras Service Family Pension Fund which is provisionally managed and assisted by Government has for its object the provision of monthly pensions for the maintenance of the widows and children of subscribers and is open, with certain exceptions, to all active and pensioned members of the Uncovenanted service of Government (except those serving under the Government of Bombay), and to Local Fund servants earning pensions from Government. Some of the special features of the fund are—(1) that widowed daughters incapable of remarriage or children labouring under such mental or bodily infirmities as incapacitate them from earning their livelihood or preclude the possibility of marriage (in case of a daughter) are admitted to its benefits; and (2) that subscribers to the Widows' and Daughters' branches are entitled to a refund of 30 per cent. of the premia paid, should the nominee predecease them after five years of admission. The second quinquennial valuation of the Fund has been completed by the actuary to the Government of India, and his report discloses very favourable results. For forms of application and rules of the Fund apply to the Accountant-General, Bengal, Imperial Secretariat Buildings, Calcutta.

WHEREAS under sections 7 and 35 of the Wards' Act IX (B.C.) of 1879, as amended up to date, the Court of Wards has assumed charge of the private properties of Babu Satyendra Chandra Chaudhuri, proprietor of the Golokpur Ward's Estate.

Notice is hereby given under section 10A of the said Act that all creditors having claims against the said proprietor or his private immovable property are hereby required to submit the same in writing to the Collector of Mymensingh at his office at Mymensingh within six months from the date of publication of this notice.

Creditors are also hereby warned that claims not submitted as required by this notice are liable to be deemed to have been duly discharged/ceased to carry interest.

H. GRAHAM, Collector of Mymensingh.

Mymensingh, the 17th June 1931. (1405—3)

Gifford Sherman Reade, deceased.

Pursuant to the Trustee Act, 1925.

NOTICE is hereby given that all creditors and other persons having any debts, claims, or demands against the estate of Gifford Sherman Reade, late of Auckland in New Zealand, formerly of Holbrook House near Ipswich in the County of Suffolk in England, deceased (who died on the 5th day of December 1929 in New Zealand and whose Will with a Codicil thereto was proved in the Principal Registry of the Probate Division of His Majesty's High Court of Justice in England on the 4th day of June 1930, by Joseph Westerhout Baker and Hugh Henderson Macleod, the Executors therein named) are hereby required to send in the particulars of their debts, claims or demands to us, the undersigned, the Solicitors for the said Executors, on or before the 1st day of September 1931, after which date the said Executors will proceed to distribute the assets of the said deceased amongst the persons entitled thereto, having regard only to the claims and demands of which they shall then have had notice; and they will not be liable for the assets of the said deceased, or any part thereof, so distributed, to any person or persons of whose debts, claims or demands they shall not then have had notice.

Dated this 27th day of May 1931.

STEWARD, ROUSE, VULLIAMY & SON,

Solicitors for the said Executors.

17, Arcade Street, Ipswich, Suffolk. (1350—1—1379)

Currency Notes.

PORTIONS of the following Currency Notes of the Calcutta Circle are stated to have been destroyed and payment of their value has been claimed by the person whose name is shown against the numbers.

Any other person claiming a right to them is warned to communicate at once with the undersigned:—

Regd. No.	Note No.	Value.	Name and address of the claimant.
		Rs.	
WD 4 of 31-32.	RC/67 17198	100	Gauri Shanker Prasad Thatheri Bazar, Benares City.
WD 4 of 31-32.	RC/67 77099	100	
WD 4 of 31-32.	RD/30 83034	100	
WD 4 of 31-32.	PD/42 31712	100	

B. C. DUTT, Currency Officer.

Currency Office, Calcutta, the 17th June 1931.

Currency Note.

PORTION of the following Note of the Calcutta Circle is stated to have been destroyed and payment of its value has been claimed by the person whose name is shown against the number.

Any other person claiming a right to it is warned to communicate at once with the undersigned—

Regd. No.	Note No.	Value.	Name and address of the claimant.
WD 5 of 31-32.	U/87 38295.	Rs. 1,000	Brigadier-General Rao Saheb Sarder Daulat Rao, General Officer Commanding, Mohitey, Dhar State Forces, Dhar, C. I.

B. C. DUTT, Currency Officer.

Currency Office, Calcutta, the 24th June 1931.

Currency Note.

A PORTION of the following Currency note of the Calcutta Circle of issue is stated to have been destroyed and payment of its value has been claimed by the person whose name is shown against the number.

Any other person claiming a right to it is warned to communicate at once with the undersigned :—

Regtd. No.	Note No.	Value.	Name and address of the claimant.
		Rs.	
W.D. 6 of 31-32.	S/61, 154030	100	Kanai Laul Ghosh, 5, Chatterji Lane, Bowbazar, Calcutta.

B. C. DUTT, Currency Officer.

Currency Office, Calcutta, the 3rd July 1931.

Currency Notes.

PORTIONS of the following Notes of the Calcutta Circle of issue are stated to have been destroyed and payment of their value has been claimed by the person whose name is shown against the numbers.

Any other person claiming a right to them is warned to communicate at once with the undersigned.

Registered No.	Note No.	Value.	Name and address of the claimant.
		Rs.	
WD. 7 of 31-32.	S-44,463698	100	Sadhu Charan Dey, 8, Shibu Thakur Lane, Barrabazar, Calcutta.
	S-44,730754	100	
	S-44,730755	100	
	S 44,833625	100	
	S-41,805014	100	
	S-52,294760	100	

B. C. DUTT, Currency Officer.

Currency Office, Calcutta, the 3rd June 1931.

Lost.

THE Government Promissory Notes Nos. F006484 and D008630 of the 6 per cent. loan of 1933-36 for Rs. 500 and Rs. 100, respectively, originally standing in the name of the Imperial Bank of India and last endorsed to Satish Chandra Dey, the proprietor, by whom they were never endorsed to any other person, having been lost, notice is hereby given that payment of the above notes and the interest thereupon have been stopped at the Public Debt Office, Imperial Bank of India, Calcutta, and that application is about to be made for the issue of duplicates in favour of the proprietor. The public are cautioned against purchasing or otherwise dealing with the abovementioned securities.

Signature of the advertiser—Satish Chandra Dey.

Residence—P.-o. and village Gahmpur, district Dacca.

(1199—3—1322)

Lost.

THE Government Promissory Note No. 310127 of the 3½ per cent. loan of 1865 for Rs. 3,000, originally standing in the name of Kedar Nath Das (now deceased), the proprietor, by whom it was never endorsed to any other person, having been lost, notice is hereby given that payment of the above note and the interest thereupon have been stopped at the Public Debt Office, Imperial Bank of India, Calcutta, and that application is about to be made for the issue of duplicate in favour of Tulsicharan Das and Sambhucharan Das, certificate holders to the estate of the abovenamed deceased. The public are cautioned against purchasing or otherwise dealing with the abovementioned security.

Name of the advertiser—Tulsicharan Das and Sambhucharan Das.

Address—241, Grand Trunk Road, Sibpur, Howrah.

(1270—3—1383)

Stolen.

THE Government Promissory Note No. F001912 of the 6 per cent. Bonds, 1930, for Rs. 500, originally standing in the name of the Accountant-General, Posts and Telegraphs, and last endorsed to Basanta Kumari Dasi (now deceased), the proprietress, by whom it was never endorsed to any other person, having been stolen, notice is hereby given that payment of the above note and the interest thereupon have been stopped at the Public Debt Office, Imperial Bank of India, Calcutta, and that application is about to be made for the issue of duplicate in favour of Nikhilesh Chandra Das, minor, under the guardianship of Pramatha Nath Das. The public are cautioned against purchasing or otherwise dealing with the abovementioned security.

Name of the Advertiser—Pramatha Nath Das.

Residence—Panchakote Raj post-office (Manbhum).

(1344—3—1384)

In the matter of the Indian Companies Act, VII of 1913, and

In the matter of the Aldih Coal Company, Limited, and Reduced.

NOTICE is hereby given that the order of the High Court made herein and dated the 8th day of June 1931 confirming the reduction of capital of the abovenamed Company from Rs. 13,46,800 to Rs. 3,36,700 and the minute approved by the Court shewing with respect to the capital of the Company as altered the several particulars required by the above statute, was registered by the Registrar of Joint Stock Companies, Bengal, on the 26th day of June 1931. The said minute is in the words and figures following :—

"The capital of the Aldih Coal Company, Ltd., henceforth is Rs. 3,36,700 divided into 134,680 shares of Rs. 2-8 each instead of the original capital of Rs. 13,46,800 divided into 134,680 shares of Rs. 10 each. At the time of the registration of this minute the sum of Rs. 2-8 has been and is deemed to be paid up on each of the 134,680 issued ordinary shares."

Dated the 30th day of June 1931.

ORR, DIGNAM & CO., Solicitors for the Company.

(1398—1—1406)

In the matter of the Indian Companies Act, VII of 1913, and

In the matter of the Thandacherry Tea Syndicate, Limited.

BY an order made by the High Court of Judicature at Fort William in Bengal in the above matter, dated the 1st day of June 1931, on the petition of Mr. Pashupati Nath Ghosh of No. 25-1, Dr. Rajendra Road, Calcutta, and Srimati Binapani Ghosh of No. 10, Rawdon Street, Calcutta, creditors of the abovenamed Company, it was ordered that the Company be wound up by the High Court of Calcutta under the provision of the Indian Companies Act, 1913.

Dated the 23rd day of June 1931.

KAR MEHTA & Co.,
Attorneys for the said petitioners.
(1345—1 1374)

In the matter of the Indian Companies Act, VII of 1913, and

In the matter of the Western Duars Tea Syndicate, Limited.

NOTICE is hereby given that a petition for the winding up of the abovenamed Company by the High Court of Judicature at Fort William in Bengal was on the 22nd day of June 1931 presented to the said Court by Messrs. Srikissendas Kanhyalal of No. 228, Harrison Road in the town of Calcutta, creditors of the said Company, and that the said petition is directed to be heard before the Court on the 27th day of July 1931, and any creditor or contributory of the said Company desirous of opposing an order for the winding up of the said Company under the above Act should appear at the time of hearing by himself or his Attorney or Advocate for that purpose; and a copy of the petition will be furnished to any creditor or contributory of the said Company requiring the same, by the undersigned, on payment of the prescribed charge for the same.

PULINANUNDO BASAK,
Attorney for the petitioners Srikissendas Kanhyalal.
15, Old Post Office Street, Calcutta, the 26th June 1931.
(1371—1—1378)

In the matter of the Indian Companies Act, VII of 1913, and

In the matter of Roy Bros. (H. C.), Ltd. (in liquidation).

NOTICE is hereby given pursuant to section 209(*1*) of the Indian Companies Act, 1913, that a meeting of the creditors of the abovenamed Company will be held on Monday, the 13th July 1931, at 10, Collin Street, Calcutta, at 5 p.m.

H. C. ROY, Liquidator.
Calcutta, the 27th June 1931. (1370—1—1402)

In the matter of the Indian Companies Act, VII of 1913, and

In the matter of Hopetown Tea Company, Limited (in liquidation).

NOTICE is hereby given pursuant to section 217 of the Indian Companies Act, VII of 1913, that a general meeting of the members of the abovenamed Company will be held on Wednesday, the 12th day of August 1931, at 3 o'clock in the afternoon, at 6, Church Lane, Calcutta, in order that there may be laid before the said Company an account showing the manner in which the winding up has been conducted and the property of the Company disposed of, and to pass an extraordinary resolution as to the disposal of the books, accounts and documents of the Company and in order that the said Company may hear any explanation that may be given by the liquidator.

E. A. COLLIN, Liquidator.
6, Church Lane, Calcutta, the 2nd July 1931.
(1403—1—1404)

In the matter of the Indian Companies Act, 1913 (VII of 1913), and

In the matter of the Brahmaputra Ice and Industries, Ltd.

NOTICE is hereby given that, on the expiration of three months from date, the name of the Brahmaputra Ice and Industries, Ltd., will, unless cause is shown to the contrary, be struck off the Register, and the Company will be dissolved.

F. C. GREENWAY, Registrar of Companies
under Act VII of 1913.
Calcutta, the 30th June 1931.

In the matter of the Indian Companies Act, 1913 (VII of 1913), and

In the matter of Pioneer Central Loan Office, Ltd.

NOTICE is hereby given that, on the expiration of three months from date, the name of Pioneer Central Loan Office, Ltd., will, unless cause is shown to the contrary, be struck off the Register, and the Company will be dissolved.

F. C. GREENWAY, Registrar of Companies
under Act VII of 1913.
Calcutta, the 30th June 1931.

In the matter of the Indian Companies Act, 1913 (VII of 1913), and

In the matter of Bogra Krishi Bank, Ltd.

NOTICE is hereby given that, on the expiration of three months from date, the name of Bogra Krishi Bank, Ltd., will, unless cause is shown to the contrary, be struck off the Register, and the Company will be dissolved.

F. C. GREENWAY, Registrar of Companies
under Act VII of 1913.
Calcutta, the 30th June 1931.

In the matter of the Indian Companies Act, 1913 (VII of 1913), and

In the matter of Anglo-Assam Tea Co., Ltd.

NOTICE is hereby given that, on the expiration of three months from date, the name of Anglo-Assam Tea Co., Ltd., will, unless cause is shown to the contrary, be struck off the Register, and the Company will be dissolved.

F. C. GREENWAY, Registrar of Companies
under Act VII of 1913.
Calcutta, the 30th June 1931.

In the matter of the Indian Companies Act, 1913 (VII of 1913), and

In the matter of Bengal Jute Association, Ltd.

NOTICE is hereby given that, on the expiration of three months from date, the name of Bengal Jute Association, Ltd., will, unless cause is shown to the contrary, be struck off the Register, and the Company will be dissolved.

F. C. GREENWAY, Registrar of Companies
under Act VII of 1913.
Calcutta, the 30th June 1931.

In the matter of the Indian Companies Act, 1913 (VII of 1913), and

In the matter of Eastern Finance Co., Ltd.

NOTICE is hereby given that, on the expiration of three months from date, the name of Eastern Finance Co., Ltd., will, unless cause is shown to the contrary, be struck off the Register, and the Company will be dissolved.

F. C. GREENWAY, Registrar of Companies
under Act VII of 1913.
Calcutta, the 30th June 1931.

In the matter of the Indian Companies Act, 1913 (VII of 1913), and

In the matter of Eastern Investment Corporation, Ltd.

NOTICE is hereby given that, on the expiration of three months from date, the name of Eastern Investment Corporation, Ltd., will, unless cause is shown to the contrary, be struck off the Register, and the Company will be dissolved.

F. C. GREENWAY, Registrar of Companies
under Act VII of 1913.
Calcutta, the 30th June 1931.

Imperial Library.

(Secretariat Buildings, 6, Esplanade East, Calcutta.)
Open on—

Weekdays and Saturdays from 10 A.M. to 7 P.M.
Sundays and Gazetted holidays from 2 P.M. to 5 P.M.

THE Imperial Library is also a Lending Library. It is free to all except children. There is no subscription to pay.

K. M. ASADULLAH, Librarian.

CINCHONA FACTORY PRODUCTS.

By order of the Government of Bengal Cinchona Factory Products as manufactured and packed at the Cinchona Factory, Mungpoo, Darjeeling district, will be sold and distributed by the **Superintendent, Presidency Jail,** *in original packages* as received from the Mungpoo Factory at the rates noted below **from the 1st May 1926** :—

Quinine Sulphate.

For 60 lbs. and upwards at a time	..	Rs. 18 per lb.
For 6 lbs. and over but less than 60 lbs. at a time	..	„ 19 „
For any quantity less than 6 lbs.	..	„ 20 „

Quinine Hydrochloride.

For 60 lbs. and upwards at a time	..	Rs. 23 per lb.
For 6 lbs. and over but less than 60 lbs. at a time	..	„ 24 „
For any quantity less than 6 lbs	..	„ 25 „

Quinine Di-Hydrochlor.

For 60 lbs. and upwards at a time	..	Rs. 25 per lb.
For 6 lbs. and over but less than 60 lbs. at a time	..	„ 26 „
For any quantity less than 6 lbs.	..	„ 27 „

Quinidine Sulphate.

For 60 lbs. and upwards at a time	..	Rs. 20 per lb.
For 6 lbs. and over but less than 60 lbs. at a time	..	„ 21 „
For any quantity less than 6 lbs.	..	„ 22 „

Cinchonidine Sulphate.

For 60 lbs. and upwards at a time	..	Rs. 25 per lb.
For 6 lbs. and over but less than 60 lbs. at a time	..	„ 26 „
For any quantity less than 6 lbs	..	„ 27 „

Cinchonine Sulphate.

For 60 lbs. and upwards at a time	..	Rs. 12 per lb.
For 6 lbs. and over but less than 60 lbs. at a time	..	„ 13 „
For any quantity less than 6 lbs.	..	„ 14 „

Cinchona Febrifuge (Powder).

For 6 lbs. and over at a time	..	Rs. 9 per lb.
For any quantity less than 6 lbs.	..	„ 10 „

Cinchona Febrifuge (Tablets).

For 6 lbs. and over at a time	..	Rs. 10 per lb.
For any quantity less than 6 lbs.	..	„ 11 „

Quinoidine (Tablets).

For 6 lbs. and over at a time	..	Rs. 5 per lb.
For any quantity less than 6 lbs.	..	„ 6 „

Quinoidine (in Mass).

For 6 lbs. and over at a time	..	Rs. 4 per lb.
For any quantity less than 6 lbs.	..	„ 5 „

Cinchona Bark (in 50 pound original bags).

Per bag .. .. .. Rs 25.

Transit charges extra in every case.

Quinine Sulphate is for sale to Government Institutions and Missionaries only. It is not for sale to Private Firms or the General Public.

Cinchona Febrifuge in Powder and Tablet form (when in stock) is for sale to Government Institutions, Missionaries and the General Public.

Quinine Sulphate will be supplied to Hospitals and Dispensaries of this Presidency only at the wholesale rate of Rs. 18 per lb., irrespective of quantities. For all other purchasers the rates given above will apply.

Provinces other than Bengal, Bihar and Orissa and Assam will get their supplies of Sulph. Quinine from the Director, Botanical Survey of India, Sibpur, Howrah.

Local sale at the jail gate from 2 to 4 p.m.

The system of payment is by—*Cash in advance*—by "*Treasury Chalans,*" which should accompany the order or indent.

In cases where this is not possible, payment should be made by "*Remittance Transfer Receipts*" or crossed "*Cheques.*"

Indents unaccompanied by cash in advance will be sent Value Payable Post. Credit sale is not allowed except under special circumstances.

In the case of *Government officers* payment will be recovered by *Book Transfer, i.e., Countersigned Invoices* in the event of *Cash* not accompanying the indent by "*Treasury Chalans,*" *Remittance Transfer Receipts* or *Cheque.*

2. Price and postage must accompany the price of the drug (when the drug is required by post).

3. The name of the Railway and Steamer Station or Post Office must be written distinctly when the parcels are required by Rail, Steamer or Post. *Railway parcels are sent by passenger train only.*

4. A scale of postage is given below :—

For ½ lb. 4 annas, ½ lb. 5 annas, 1 lb. 8 annas, 1½ lbs. 11 annas, 2 lbs. 14 annas, 2½ lbs. Re. 1-1, 3 lbs. Re. 1-1, 3½ lbs. Re. 1-4, 4 lbs. Re. 1-7, 5 lbs. Re. 1-13, 5½ lbs. Re. 1-13, 6 lbs. Rs. 2.

Two different drugs are not packed in the same parcel and postage must be paid separately for each kind.

N.B.—Postage stamps are not accepted as revenue.

Government reserve the right to alter the price without notice.

Registered No. C207 *No. 28 of 1931*

The Calcutta Gazette

THURSDAY, JULY 9, 1931.

CONTENTS:

	PAGE.		PAGE.
Statement under the Cotton Ginning and Pressing Factories Act, 1925 ..	903	Weather and Crop Report for the week ending 1st July 1931	907—910
Calcutta Improvement Trust Notice ...	904	Statement showing the daily gauge-readings of certain rivers for the week ending 25th June 1931	911—917
Statements of weekly gauge readings of certain rivers in Bengal	905—906		

Supplement.

Official Papers.

FORM C—BENGAL.

STATEMENT OF COTTON PRESSED IN THE BENGAL PRESIDENCY FOR THE WEEK ENDING 26th JUNE 1931.

[Section 5 (2) of the Cotton Ginning and Pressing Factories Act, 1925.]

Name of Division or block.	Number of bales pressed.				District included in the block.
	During the week.	During the corresponding week, last year.	Since 1st September 1930 (the date prescribed by the Local Government as the commencement of the season).	During the corresponding period, last year.	
The Bengal Presidency	1,093 or 1,085·11 bales of 400 lbs. each.	1,082	28,880	29,071	All districts in the Presidency.

J. B. McBRIDE,
Chief Inspector of Factories, Bengal (offg.).

CALCUTTA IMPROVEMENT TRUST.

5, Clive Street, Calcutta, the 16th June 1931.

Notice under Section 43 of Bengal Act V of 1911.

Scheme No. XXXVIII—Mission Row to Central Avenue (portion of Alignment Nos. X and XI).

The Board of Trustees for the Improvement of Calcutta hereby give notice that a street scheme, viz., Scheme No. XXXVIII—Mission Row to Central Avenue, which includes portions of Alignment Nos. X and XI as sanctioned by Government, in Wards Nos. X and XII of the Calcutta Municipality, has been framed for the area bounded as follows:—

On the North—From a point on the middle of Dalhousie Square East about 60 feet from the south-western corner of No. 6, Dalhousie Square East, running eastwards in a straight line across Dalhousie Square East, and Mission Row and along the northern boundary of No. 9, Mission Row to the north-eastern corner of No. 8, Mission Row. Thence running in a south-easterly direction across Bentinck Street to the south-western corner of No. 74, Bentinck Street, thence running eastwards along the northern edge of Weston Street to south-eastern corner of 15, Bow Street and thence to the north-eastern corner of No. 2, Kapalitola Lane, and thence in a south-easterly direction across Khetra Das Lane and Kapalitola Lane to the north-eastern corner of 15, Khetra Das Lane.

On the East—From this point running southwards in a straight line along the eastern boundaries of 15, 14/1, 14, and 5, Khetra Das Lane to the south-western corner of No. 12, Khetra Das Lane.

From this point running westwards along the southern boundary of No. 5, Khetra Das Lane, southern and western boundary of No. 2, Khetra Das Lane, a portion of the southern boundary of No. 25, Khairu Lane, the eastern and southern boundary of No. 23, Khairu Lane and across Khairu Lane to a point on the eastern boundary of No. 4B, Khairu Lane about 30 feet from its south eastern corner. Thence southwards along the western edge of Khairu Lane to the south-eastern corner of 9/2, Khairu Lane.

On the South—Thence running westwards along a portion of the northern boundary of Scheme VIIE and the northern boundary of the mosque at No. 23, Prinsep Street to the south-western corner of No. 4, Metcalfe Street: thence westwards to the eastern edge of Bentinck Street about 60 feet from its junction with northern edge of Prinsep Street and thence across Bentinck Street along the southern edge of Mangoe Lane across Nos. 4 and 3, Mangoe Lane and No. 12, Old Court House Street to a point on the middle of Old Court House Street about 57 feet away from the north-western corner of No. 12, Old Court House Street.

On the West—From this point running northwards in a straight line along the middle of Old Court House Street and Dalhousie Square East to its starting point.

Particulars of the scheme, map of the area comprised in the scheme and a statement of the land which it is proposed to acquire may be inspected at the offices of the Trust, No. 5, Clive Street on week days between the hours of 11 a.m. and 4 p.m. and on Saturdays between 11 a.m. and 2 p.m.

Copies of the above documents will be delivered to the applicant on payment of the following fees:—

	Rs.	A.
Particulars of the scheme ...	0	4
Map of the area ...	1	0
Statement of the land which it is proposed to acquire ...	0	4

Objections to the scheme will be received up to the 10th October 1931.

A. L. SWAN, *Chairman.*

Statement showing the gauge readings at Dacca Waterworks on the river Buriganga for the week ending 27th June 1931.

Date.	At highest water.		At lowest water.		Commencement of—		Remarks.	
	Time.	Reading.	Time.	Reading.	Ebb tide.	Flow tide.	At 7 a.m.	At 5 p.m.
1931.								
21st June ..	16-30	11·7	..	..	..	..	11·5	11·65
22nd „ ..	Tide is not perceptible.						11·9	12·0
23rd „ ..							12·15	12·2
24th „ ..							12·2	12 2
25th „ ..							12·25	12·3
26th „ ..							12·35	12·35
27th „ ..							12·4	12·45

B. M. on settling tank 39·49 O. M. S. L. Zero is at O. M. S. L.

Notable high and low water-levels of previous years.

		Taken at high tide.			Taken at low tide.
27th August	1906 ..	70·5	23rd February	1907 ..	51·06
5th September	1909 ..	66·86	13th „	1908 ..	51·06
10th August	1910 ..	69·86	12th March	1912 ..	51·06
1st „	1911 ..	68·46	6th „	1914 ..	50·60
13th „	1912 ..	67·16	22nd February	1915 ..	50·30
31st „	1915 ..	69·7	15th „	1916 ..	50·60
8th „	1916 ..	68·1	3rd March	1917 ..	51·0
12th „	1917 ..	67·1	21st February	1918 ..	51·40
13th „	1918 ..	69·12	26th „	1919 ..	50·4
2nd „	1919 ..	66·8	18th „	1920 ..	50·9
8th September	1920 ..	66·9	19th „	1921 ..	50·9
28th July	1921 ..	68·4	8th March	1922 ..	51·05
10th August	1922 ..	68·00	14th „	1923 ..	50·8
31st July	1923 ..	66·15	16th February	1924 ..	50·50
29th August	1924 ..	68·82	5th March	1925 ..	50·9
8th September	1925 ..	68·52	9th February	1926 ..	2·2
15th August	1926 ..	19·6	27th „	1927 ..	2·10
17th September	1927 ..	18·70	16th „	1928 ..	2·2
22nd August	1928 ..	20·0	21st „	1929 ..	2·0
13th July	1929 ..	17·8	24th „	1930 ..	2·3
12th September	1930 ..	18·65			

N. B.—Zero of the gauge at Dacca Waterworks prior to 11 a.m. on the 8th January 1926= −48·51 with reference to P. W. D. datum.
Zero of the gauge at Dacca Waterworks since 11 a.m. on the 8th January 1926=0·00 with reference to P. W. D. datum.

W. R. ROBSON, *Executive Engineer,*
Khulna Division.

KHULNA, *the 4th July 1931.*

Statement of weekly gauge readings on the river Ganges at Rampur Boalia for the week ending the 27th June 1931.

Date.	Hour.	Height of surface above zero of gauge.	Height of surface above P W.D. datum	Height of surface above P W. D. datum on the same date last year.	Remarks.
1931.					
21st June ..	7 a.m.	....	36·25	38·00	The value of zero of gau =30·75 P. W. D.
22nd „ ..	7 „	....	36·05	38·05	
23rd „ ..	7 „	....	35·90	38·90	
24th „ ..	7 „	....	35·90	39·70	Zero of gauge referred t B. M. on Rajshahi Colleg stop; value 64·73.
25th „ ..	7 „	....	36·05	39·90	
26th „ ..	7 „	....	36·25	40·00	
27th „ ..	7 „	....	37·00	40·50	

Highest recorded level on 26-8-1879=64·24.
Lowest recorded level on 25-4-1884=32·62.

P. C. Basu, *Subdivisional Officer,*
Irrigation Department, Rajshahi.

Rampur Boalia, *the 27th June 1931.*

DISTRICT REPORTS ON WEATHER AND CROPS.

For the week ending on the 1st July 1931.

Summary.—During the week the rainfall was generally light to moderate excepting in some North and East Bengal districts where the fall was somewhat heavy Field operations for winter paddy is progressing favourably. Weeding of autumn crops still continues in some districts. Harvesting of autumn paddy on low land is proceeding in some North and East Bengal districts. Prospects of standing crops are generally fair except in some East Bengal districts where some damage to *aus* paddy and jute by heavy rains is reported Distress continues to prevail in parts of Nadia, Rangpur, Bogra and Pabna where the number of persons attending the test relief works was 2,883, 867, 228 and 2,659 respectively. The number of persons gratuitously relieved was 992 and 18 in Rangpur and Bogra respectively. Distribution of agricultural loans continues in Nadia and Pabna The average price of common rice for the Province has fallen by about 0·17 per cent. as compared with that of the previous week.

Serial No.	District and subdivision.	Rainfall.	Price of common rice, in seers, per rupee.		Character of the weather, condition of crops, etc.
			This week.	Previous week.	
1	2	3	4	5	6
		Inches.			
1	24-Parganas ..	1·60	10	10	Weather seasonable. Fodder and water are sufficient. Sowing of *aman* paddy is going on in Barasat, Basirhat, Barrackpore and Diamond Harbour subdivisions Cattle-disease is reported from the Mograhat police-station in Diamond-Harbour subdivision.
	Diamond Harbour.	4·36	10½	10½	
	Barrackpore ..	1·48	9	9	
	Baraset ..	1·18	9	9	
	Basirhat ..	3·22	9	9⅛	
2	Nadia ..	3·19	9½	9½	Weather seasonable Prospects of standing crops are fair Distribution of a further sum of Rs 25,000 as an agricultural loans has commenced. 2,883 persons attended test works in eight centres during the week ending on the 27th June
	Kushtia ..	6·32	10	10	
	Meherpur ..	7·34	8 13/16	8 13/16	
	Chuadanga ..	3·91	9¼	9¼	
	Ranaghat ..	3·75	10	10	
3	Murshidabad ..	0·65	11	11	Weather seasonable Prospects of crops are fair. Fodder and water are sufficient.
	Lalbagh ..	2·32	10	10	
	Jangipur ..	3·77	11½	12	
	Kandi ..	0·75	12	12½	
4	Jessore ..	2·07	9	9	Weather seasonable. Sowing of jute and *aus* paddy is over. Fodder and water are sufficient.
	Jhenidah ..	1·23	9	9	
	Magura ..	6·54	9	9	
	Narail ..	3·57	10	10	
	Bongaon ..	2·92	8	8	
5	Khulna ..	4·15	10½	10½	Weather seasonable ; its effects on crops are good. Fodder and water are sufficient. Export and import of rice continue slowly.
	Satkhira ..	3·03	9⅞	9⅞	
	Bagerhat ..	1·68	8½	8½	

Serial No.	District and subdivision.	Rainfall.	Price of common rice, in seers, per rupee.		Character of the weather, condition of crops, etc.
			This week.	Previous week.	
1	2	3	4	5	6
		Inches.			
6	Burdwan ..	2·38	11	11	Weather seasonable. Fodder and water are sufficient.
	Asansol ..	0·88	9	9½	
	Katwa ..	3·69	12	12	
	Kalna ..	1·39	11½	11½	
7	Birbhum ..	3·38	13	13	Weather hot and cloudy. Cattle-disease is reported from Nalhati circle. Fodder and water are sufficient.
	Rampurhat ..	0·61	12½	12½	
8	Bankura ..	6·06	10½	10¾	Weather hot and cloudy. Prospects of standing crops are fair. Fodder and water are sufficient.
	Vishnupur ..	2·78	11½	12	
9	Midnapore ..	1·27	13½	13½	Weather cloudy. Fodder and water are sufficient.
	Contai ..	1·48	12	12	
	Tamluk ..	0·60	10	10	
	Ghatal ..	1·03	12¼	12¼	
	Jhargram ..	0·97	11¾	11¾	
10	Hooghly ..	3·19	11	10	Weather seasonable. Condition of standing crops is fair. Fodder and water are sufficient.
	Serampore ..	1·40	9¾	9¾	
	Arambagh ..	(n)	(n)	12½	
11	Howrah ..	2·45	8	8	Weather favourable to agricultural operations. Ploughing is going on. No large import or export. Fodder and water are sufficient.
	Uluberia ..	1·71	10¾	10¾	
12	Rajshahi (Rampur-Boalia).	2·32	9¾	9¾	Weather sultry with a few downpours. Prospects of standing crops are good. Weeding of jute and *aus* crops is going on.
	Naogaon ..	1·32	10¾	10¾	
	Nator ..	2·05	9⅝	9¾	
13	Dinajpur ..	1·42	10	10	Weather seasonable; its effects on agricultural operations are favourable. Prospects of standing crops are fair. Fodder and water are sufficient. Cattle-disease is reported from Phulbari police-station.
	Thakurgaon ..	2·41	11	11	
	Balurghat ..	0·96	12	12	
14	Jalpaiguri ..	15·82	7	7	Prospects of jute and other *bhadoi* crops are not favourable. Preparation of lands for *haimanti* paddy has commenced. Fodder and water are sufficient.
	Alipur ..	14·09	7	8	
15	Darjeeling ..	6·77	7	7	Potatoes and maize are being harvested. Fodder and water are sufficient. Cattle-disease exists at places.
	Kurseong ..	2·25	7	7	
	Siliguri ..	12·76	9	10½	
	Kalimpong ..	3·36	8	8	

(n) Not reported.

Serial No.	District and subdivision.	Rainfall.	Price of common rice, in seers, per rupee.		Character of the weather, condition of crops, etc.
			This week.	Previous week.	
1	2	3	4	5	6
		Inches.			
16	Rangpur ..	4·49	9	9	Weather cloudy. Prospects of standing crops are fair. Fodder and water are sufficient. 867 persons attended the test relief works. Number of persons receiving gratuitous relief was 992.
	Nilphamari ..	3·47	10½	10½	
	Kurigram ..	4·47	10 11/16	10 11/16	
	Gaibandha ..	3·90	10	10	
17	Bogra ..	2·98	11½	9¾	Condition of crops is satisfactory. Harvesting of *aus* paddy has commenced. Test relief works are going on in affected parts. Gratuitous relief is being given to helpless widows, children and disabled persons. Number of persons attending the test relief works amounts to 228. Number of persons gratuitously relieved is 18.
18	Pabna ..	4·01	9½	9½	Export and import are normal. Condition of cattle is well. Fodder and water are sufficient. Rapid rise of rivers is endangering the standing crops. 2,659 persons attended the test relief works during the week ending on the 27th June 1931. Total amount paid up to date Rs. 26,314-3-9 only.
	Sirajganj ..	3·78	10	10	
19	Malda ..	1·15	10½	10½	Weather seasonable. Prospects of standing crops are not good. Fodder and water are sufficient. Cattle-disease is reported from Harishchandrapur and Kharba thana.
20	Cooch Behar ..	11·86	11 7/16	10	Weather cloudy and rainy. Preparation of lands for *haimanti* paddy, transplantation of *haimanti* seedlings and harvesting of autumn paddy are progressing. Prospects of standing crops are fair. Fodder and water are sufficient. Cattle-disease is reported from the Dinhata subdivision.
21	Dacca ..	1·52	8½	8½	Rainfall at North Sadar (Kapasia) 1·00. Weather seasonable. Condition of jute and other standing crops is satisfactory. Harvesting of *aus* paddy is going on. Fodder and water are sufficient.
	Manikganj ..	2·36	9½	9½	
	Narayanganj	2·88	9	9	
	Munshiganj ..	1·90	9	9	
22	Mymensingh ..	9·39	9	9	Weather seasonable. Some damage to jute and *aus* paddy crops in Netrakona and Kishoreganj and that to less extent in Sadar are reported. Prospects of standing crops are fair. Fodder and water are adequate.
	Jamalpur ..	1·93	9	8¾	
	Tangail ..	1·92	9	9	
	Netrakona ..	10·42	8	9½	
	Kishorganj ..	8·71	9 3/16	9 3/16	

Serial No.	District and subdivision.	Rainfall.	Price of common rice, in seers, per rupee.		Character of the weather, condition of crops, etc.
			This week.	Previous week.	
1	2	3	4	5	6
		Inches.			
23	Faridpur ..	7·50	9½	8½	Weather seasonable and favourable. Weeding of jute and paddy is going on favourably. Prospects of standing crops are fair. No large import or export. Fodder and water are sufficient.
	Goalundo (Rajbari).	5·15	9	9	
	Madaripur ..	1·13	10	9½	
	Gopalganj (*a*)	0·61	8½	8½	
24	Bakarganj (Barisal).	4·11	9	9	Weather seasonable. Fodder and water are sufficient. Prospects of standing crops are good.
	Pirojpur ..	2·78	9½	9½	
	Patuakhali ..	5·54	10	10	
	Dakshin Shabazpur (Bhola).	3·24	9½	9½	
25	Chittagong ..	2·28	10 11*	10 10½*	Weather seasonable. Prospects of standing *aus* crops fair. Fodder and water are sufficient. *Panga* salt sells at 16 seers per rupee at Sadar and at 13 seers per rupee at Cox's Bazar.
	Cox's Bazar ..	5·89	10	(*n*)	
26	Tippera (Comilla).	4·02	9½	9½	Prospects of standing crops are fair.
	Brahmanbaria	1·47	10	10	
	Chandpur ..	1·98	10	10	
27	Noakhali ..	4·55	10½	9	Heavy rains have caused damage to *aus* paddy in some areas.
	Feni ..	9·07	9	9	
28	Chittagong Hill Tracts.	1·53	13	13	Weather seasonable.
29	Tripura State	3·81	9½	8	Weather seasonable. Fodder and water are sufficient. *Aus* paddy in Belonia has been damaged by flood. Cleansed cotton sells at Rs. 6 to Rs. 13 per maund and jute at Rs. 2 to Rs. 5 per maund.

* Burma rice. (*n*) Not reported.

(*a*) The rainfall at Haridaspur, which is very near to Gopalganj, is not shown here.

DACCA, *the 4th July 1931.* J. C. ROY, for *Director of Agriculture, Bengal.*

Statement showing the daily gauge readings of certain rivers at the stations named below for the 19th June 1931.

Name of river and place where readings are taken.	Hour.	Reading on gauge.	Value of zero referred to P. W. D. datum.	Height above P. W. D. datum.	Compared with previous day's height.		Height above P. W. D. datum on same date in—	
					Rise.	Fall.	1930.	1929.
Ganges .. Monghyr ..	6 a.m. ..	100·90′	0·00′	100·90′	..	..	101·00′	105·00′
Ganges .. Rajmahal ..	6 „ ..	61·30′	0·00′	61·30′	..	..	61·30′	65·90′
Ganges .. Goalundo ..	8-54 „ ..	20·60′	1·409′	22·009′	0·60′	..	19·209′	23·409′
Bhagirathi .. Swarupganj ..	10 a.m. ..	6·67′	0·00′	6·67′	..	..	4·57′	6·29′
Brahmaputra .. Dibrugarh ..	8 a.m. ..	31·70′	301·50′	333·20′	..	1·80′	336·80′	334·66′
Brahmaputra .. Gauhati ..	....	19·90′	136·958′	156·858′	..	..	156·658′	158·758′
Brahmaputra .. Serajganj ..	12-24 p.m.	39·10′	1·509′	40·609′	0·10′	..	36·909′	39·509′
Dhaleswari .. Sabhar ..	7 a.m. ..	15·50′	0·00′	15·50′	0·70′	..	14·90′	17·70′
Meghna .. Fenchuganj ..	7 a.m. ..	24·83′	1·509′	25·609′	0·10′	..	..	..
Meghna .. Bhairab Bazar ..	6-24 „ ..	13·25′	1·61′	14·86′	0·50′	..	15·03′	..
Meghna .. Chandpur ..	7:54 „ ..	8·17′	1·61′	9·78′	0·42′	..	9·03′	10·61′
Lakhya .. Narayanganj ..	7 a.m. ..	18·75′	—5·59′	13·16′	..	..	12·58′	14·75′
Madaripur Bil Route .. Takerhat ..	1-24 p.m. ..	7·60′	0·00′	7·60′	0·20′	..	7·55′	9·25′
Damodar .. Edilpur ..	6 a.m. ..	—0·67′	92·58′	91·91′	0·70′	..	94·08′	95·00′.

Statement showing the daily gauge readings of certain rivers at the stations named below for the 20th June 1931.

Name of river and place where readings are taken.	Hour.	Reading on gauge.	Value of zero referred to P. W. D. datum.	Height above P. W. D. datum.	Compared with previous day's height.		Height above P. W. D. datum on same date in—	
					Rise.	Fall.	1930.	1929.
Ganges .. Monghyr ..	6 a.m. ..	101·00′	0·00′	101·00′	0·20′	..	101·00′	105·20′
Ganges .. Rajmahal ..	6 „ ..	61·25′	0·00′	61·25′	..	0·05′	61·00′	65·80′
Ganges .. Goalundo ..	8-54 „ ..	21·10′	1·409′	22·509′	0·50′	..	19·609′	23·409′
Bhagirathi .. Swarupganj ..	10 a.m. ..	7·26′	0·00′	7·26′	0·59′	..	4·87′	6·81′
Brahmaputra .. Dibrugarh ..	8 a.m. ..	30·30′	301·50′	331·80′	..	1·40′	336·30′	334·56′
Brahmaputra .. Gauhati ..	....	20·40′	136·958′	157·358′	0·50′	..	156·058′	158·158′
Brahmaputra .. Serajganj ..	12-24 p.m. ..	39·10′	1·509′	40·609′	Steady.		37·509′	39·209′
Dhaleswari .. Sabhar ..	7 a.m. ..	15·90′	0·00′	15·90′	0·40′	..	15·30′	18·20′
Meghna .. Fenchuganj ..	7 a.m. ..	24·60′	1·509′	26·109′	0·50′	..	31·509′	..
Meghna .. Bhairab Bazar ..	6 „ ..	13·42′	1·61′	15·03′	0·17′	..	15·69′	..
Meghna .. Chandpur ..	8-5 „ ..	8·58′	1·61′	10·19′	0·42′	..	9·36′	11·03′
Lakhya .. Narayanganj ..	7 a.m. ..	19·17′	−5·59′	13·58′	0·42′	..	12·83′	..
Madaripur Bil Route .. Takerhat ..	2-24 p.m. ..	7·90′	0·00′	7·90′	0·30′	..	8·00′	9·45′
Damodar .. Edilpur ..	6 a.m. ..	0·75′	92·53′	93·33′	1·42′	..	95·33′	95·33′

Statement showing the daily gauge readings of certain rivers at the stations named below for the 21st June 1931.

Name of river and place where readings are taken.	Hour.	Reading on gauge.	Value of zero referred to P. W. D. datum.	Height above P. W. D. datum.	Compared with previous day's height.		Height above P. W. D. datum on same date in—	
					Rise.	Fall.	1930.	1929.
Ganges .. Monghyr ..	6 a.m. ..	101·00′	0·00′	101·00′	Steady.		101·90′	104·80′
Ganges .. Rajmahal ..	6 ,, ..	61·05′	0·00′	61·05′	..	0·20′	61·10′	65·30′
Ganges .. Goalundo ..	8-54 ,, ..	21·30′	1·409′	22·709′	0·20′	..	20·109′	23·509′
Bhagirathi .. Swarupganj ..	11 a.m. ..	6·78′	0·00′	6·78′	..	0·48′	5·26′	6·86′
Brahmaputra .. Dibrugarh ..	8 a.m. ..	29·50′	301·50′	331·00′	..	0·80′	335·20′	334·66′
Brahmaputra .. Gauhati ..	....	20·10′	136·958′	157·058′	..	0·30′	156·958′	157·758′
Brahmaputra .. Serajganj ..	12-24 p.m. ..	39·10′	1·509′	40·609′	Steady.		37·709′	39·009′
Dhaleswari .. Sabhar ..	7 a.m. ..	16·20′	0·00′	16·20′	0·30′	..	15·70′	..
Meghna .. Fenchuganj ..	7 a.m. ..	25·00′	1·509′	26·509′	0·40′	..	31·559′	..
Meghna .. Bhairab Bazar ..	6 ,, ..	13·58′	1·61′	15·19′	0·17′	..	17·44′	..
Meghna .. Chandpur ..	8-45 ,, ..	9·08′	1·61′	10·69′	0·50′	..	9·86′	11·11′
Lakhya .. Narayanganj ..	7 a.m. ..	19·08′	−5·59′	13·49′	..	0·09′	13·20′	15·20′
Madaripur Bil Route .. Takerhat ..	4-24 p.m. ..	8·10′	0·00′	8·10′	0·20′	..	8·10′	9·50′
Damodar .. Edilpur ..	6 a.m. ..	1·17′	92·58′	93·75′	0·42′	..	95·16′	92·70′

Statement showing the daily gauge readings of certain rivers at the stations named below for the 22nd June 1931.

Name of river and place where readings are taken.	Hour.	Reading on gauge.	Value of zero referred to P. W. D. datum.	Height above P.W.D. datum.	Compared with previous day's height.		Height above P. W. D. datum on same date in—	
					Rise.	Fall.	1930.	1929.
Ganges .. Monghyr ..	6 - a.m. ..	101·10′	0·00′	101·10′	0·10′	..	102·00′	104·30′
Ganges .. Rajmahal ..	6 „ ..	60·90′	0·00′	60·90′	..	0·25′	62·50′	65 05′
Ganges .. Goalundo ..	8-54 „ ..	21·40′	1·409′	22·809′	1·10′	..	20·409′	23·309′
Bhagirathi .. Swarupganj ..	1 p.m. ..	6·75′	0·00′	6·75′	..	3·03′	5 97′	7·45′
Brahmaputra .. Dibrugarh ..	8 a.m. ..	29·50′	301·50′	331·00′	Steady.		336·20′	334·56′
Brahmaputra .. Gauhati ..	....	19·20′	136·958′	156·158′	..	0·90′	157·758′	157·258′
Brahmaputra .. Sirajganj ..	12-24 p.m. ..	39·00′	1·509′	40·509′	..	0·10′	37·809′	38·709′
Dhaleswari .. Sabhar ..	7 a.m. ..	16·50′	0·00′	16·50′	0·30′	..	16 10′	..
Meghna .. Fenchuganj ..	7 a.m. ..	25·45′	1·509′	26·959′	0·45′	..	31·909′	..
Meghna .. Bhairab Bazar ..	6-24 „ ..	13·75′	1·61′	15·36′	0·17′	..	17·78′	..
Meghna .. Chandpur ..	9-35 „ ..	9·17′	1·61′	10·78′	0·08′	..	10·19′	11·11′
Lakhya .. Narayanganj ..	7 a.m. ..	19·04′	−5·59′	13·45′	..	0·04′	13·58′	15·24′
Madaripur Bil Route .. Takerhat ..	4-54 p.m. ..	8·20′	0·00′	8·20′	0·10′	..	8·35′	9·50′
Damodar .. Edilpur ..	6 a.m. ..	1·00′	92·58′	93·58′	....	0·17′	95·75′	95·41′

Statement showing the daily gauge readings of certain rivers at the stations named below for the 23rd June 1931.

Name of river and place where readings are taken.	Hour.	Reading on gauge.	Value of zero referred to P. W. D. datum.	Height above P. W. D. datum.	Compared with previous day's height.		Height above P. W. D. datum on same date in—	
					Rise.	Fall.	1930.	1929.
Ganges .. Monghyr ..	6 a.m. ..	101·10′	0·00′	101·10′	Steady.		102·00′	103·80′
Ganges .. Rajmahal ..	6 „ ..	60·90′	0·00′	60·90′	Steady.		62·90′	64·90′
Ganges .. Goalundo ..	8-54 „ ..	21·40′	1·409′	22·809′	Steady.		20·409′	23·009′
Bhagirathi .. Swarupganj ..	2 p.m. ..	6·71′	0·00′	6·71′	..	0·04′	6·35′	7·41′
Brahmaputra .. Dibrugarh ..	8 a.m. ..	29·30′	301·50′	330·80′	..	0·20′	336·50′	335·06′
Brahmaputra .. Gauhati ..	....	18·10′	136·958′	155·058′	..	1·10′	158·358′	157·358′
Brahmaputra .. Serajganj ..	12-24 p.m. ..	39·00′	1·509′	40·509′	Steady.		37·909′	38·609′
Dhaleswari .. Sabhar ..	7 a.m. ..	16·70′	0·00′	16·70′	0·20′	..	16·50′	..
Meghna .. Fenchuganj ..	7 a.m. ..	25·75′	1·509′	27·259′	0·30′	..	32·459′	..
Meghna .. Bhairab Bazar ..	6 „ ..	14·08′	1·61′	15·69′	0·33′	..	18·44′	..
Meghna .. Chandpur ..	10-30 „ ..	8·92′	1·61′	10·53′	..	0·25′	10·53′	11·11′
Lakhya .. Narayanganj ..	7 a.m. ..	18·92′	−5·59′	13·33′	..	0·12′	14·03′	15·28′
Madaripur Bil Route .. Takerhat ..	5-25 p.m. ..	8·30′	0·00′	8·30′	0·10′	..	8·60′	9·55′
Damodar .. Edilpur ..	6 a.m. ..	1·25′	92·58′	93·83′	0·25′	..	96·58′	95·08′

Statement showing the daily gauge readings of certain rivers at the stations named below for the 24th June 1931.

Name of river and place where readings are taken.	Hour.	Reading on gauge.	Value of zero referred to P W.D. datum.	Height above P. W. D. datum.	Compared with previous day's height.		Height above P. W. D. datum on same date in—	
					Rise.	Fall.	1930.	1929.
Ganges .. Monghyr ..	6 a m. ..	101·00′	0·00′	101·00′	Steady		102·00′	103·50′
Ganges .. Rajmahal ..	6 „ ..	61·10′	*—0·12′	60·98′	0·08′	..	62·95′	64·80′
Ganges .. Goalundo ..	8·54 a.m. ..	21·30′	1·409′	22·709′	..	0·10′	20·609′	23·009′
Bhagirathi .. Swarupganj ..	2 p m. ..	6·72′	0·00′	6 72′	0 01′	..	6·92′	7·24′
Brahmaputra .. Dibrugarh ..	8 a.m. ..	31·40′	301·50′	332·90′	2·10′	..	336·70′	335·76′
Brahmaputra .. Gauhati ..	....	17·50′	136·958′	154·458′	..	0·60′	158·358′	157·558′
Brahmaputra .. Serajganj ..	12-24 p m. ..	38·10′	1·509′	39·609′	..	0·90′	38·209′	38·509′
Dhaleswari .. Sabhar ..	7 a.m. ..	19·80′	0·00′	19·80′	0·10′	..	16·90′	..
Meghna .. Fenchuganj ..	7 a.m. ..	26·05′	1·509′	27·559′	0·30′	..	32·709′	..
Meghna .. Bhairab Bazar ..	6 „ ..	14·21′	1·61′	15·82′	0·12′	..	19·19′	..
Meghna .. Chandpur ..	11-49 „ ..	8·83′	1·61′	10·44′	..	0 08′	11·11′	11·03′
Lakhya .. Narayanganj ..	7 a m. ..	18·97′	–5·59′	13·38′	0·05′	..	14·49′	15·35′
Madaripur Bil Route .. Takerhat ..	6-4 p.m. ..	8·30′	0·00′	8·30′	Steady		8·80′	9·60′
Damodar .. Edilpur ..	6 a.m. ..	1·17′	92·58′	93·75′	..	0·29′	100·58′	94·83′

*Value of the zero of temporary gauge fixed at —0·12 from this date.

Statement showing the daily gauge readings of certain rivers at the stations named below for the 25th June 1931.

Name of river and place where readings are taken.	Hour.	Reading on gauge.	Value of zero referred to P. W. D. datum.	Height above P. W. D. datum.	Compared with previous day's height.		Height above P. W. D. datum on same date in—	
					Rise.	Fall.	1930.	1929.
Ganges .. Monghyr ..	6 a.m. ..	100·80′	0·00′	100·80′	0·20′	..	101·90′	103·70′
Ganges .. Rajmahal ..	6 „ ..	61·50′	−0·12′	61·38′	0·40′	..	62·95′	64·80′
Ganges .. Goalundo ..	8-54 „ ..	21·20′	1·409′	22·609′	..	0·10′	21·009′	22·909′
Bhagirathi .. Swarupganj ..	4 p.m. ..	6·36′	0·00′	6·36′	..	0·36′	8·48′	7·23′
Brahmaputra .. Dibrugarh ..	8 a.m. ..	32·50′	301·50′	334·00′	1·10′	..	337·10′	335·76′
Brahmaputra .. Gauhati ..	....	17·30′	136·958′	154·258′	..	0·20′	158·558′	157·558′
Brahmaputra .. Serajganj ..	12-24 p.m. ..	37·30′	1·509′	38·809′	..	0·80′	38·709′	38·609′
Dhaleswari .. Sabhar ..	7 a.m. ..	17·00′	0·00′	17·00′	0·20′	..	17·30′	....
Meghna .. Fenchuganj ..	7 a.m. ..	26·30′	1·509′	27·809′	0·25′	..	32·809′	....
Meghna .. Bhairab Bazar ..	6 „ ..	14·29′	1·61′	15·90′	0·08′	..	19·69′	....
Meghna .. Chandpur ..	12-25 p.m. ..	9·00′	1·61′	10·61′	0·17′	..	11·28′	10·95′
Lakhya .. Narayanganj ..	7 a.m. ..	19·08′	−5·59′	13·49′	0·11′	..	14·78′	15·37′
Madaripur Bil Route .. Takerhat ..	6 „ ..	8·25′	0·00′	8·25′	..	0·05′	9·00′	9·70′
Damodar .. Edilpur ..	6 „ ..	1·00′	92·58′	93·58′	..	0·08′	101·90′	94·75′

Printed at the Bengal Government Press, Alipore, and published by the Bengal Secretariat Book Depot, Writers' Buildings, in the City of Calcutta, on the 9th July 1931.

Registered No. C207

The Calcutta Gazette

Extraordinary

WEDNESDAY, JULY 15, 1931.

GOVERNMENT OF BENGAL.

Political Department.

Political.

NOTIFICATION.

No. 11644P.—14th July 1931.—In exercise of the power conferred by section 99A of the Code of Criminal Procedure, 1898 (Act V of 1898), the Governor in Council hereby declares to be forfeited to His Majesty all copies, wherever found, of a leaflet entitled "Martyrs of the fame of shooting at Writers' Buildings (Calcutta)" containing photographs of Dinesh Gupta, Benoy Bose and Sudhir Gupta, printed and published by the Hindu Punch Press, 84, Upper Chitpore Road, Calcutta, on the ground that the said leaflet contains matter which brings or attempts to bring into hatred or contempt and excites or attempts to excite disaffection towards the Government established by law in British India, the publication of which is punishable under section 124A of the Indian Penal Code.

R. N. Reid,

Chief Secy. to the Govt. of Bengal (offg.).

Printed at the Bengal Government Press, Alipore, and published by the Bengal Secretariat Book Depot, Writers' Buildings, in the City of Calcutta, on the 15th July 1931.

LIBRARY

Registered No. C207 *No. 29 of 1931*

The Calcutta Gazette

THURSDAY, JULY 16, 1931.

CONTENTS:

	PAGE.
PART I.—Orders and Notifications by the Governor of Bengal, the Government of Bengal, the High Court, Government Treasury, etc.	815—874
PART IA.—Orders and Notifications by the Government of India republished for general information	177—204
PART IB.—Educational Notices ..	801—807
PART II.—Advertisements	661—672
PART III.—Acts of the Bengal Legislative Council	*Nil*
PART IV.—Bills introduced in the Bengal Legislative Council, Reports of Select Committees presented or to be presented to that Council, and Bills published before introduction in that Council ..	*Nil*
PART V.—Acts of the Indian Legislature assented to by the Governor General and Ordinances promulgated under section 72 of the Government of India Act ..	*Nil*
PART VI.—Bills introduced in the Council of State and Legislative Assembly, Reports of Select Committees presented to the Council and Assembly and Bills published under Rule 18 of the Indian Legislative Rules	*Nil*
APPENDIX.—List of Common and Special Jurors for the year 1931, district 24-Parganas	1—149
SUPPLEMENT No. 29—	
Cotton Ginning and Pressing—Weekly Vital Statistics - Irrigation area leased —Weekly Weather and Crop Report—Prices-current—Daily gauge-readings —Calcutta Improvement Trust Notice —Weekly gauge-readings ..	919—940
Preliminary Forecast of the Jute Crop, 1931	941—951

Part I

Orders and Notifications by the Governor of Bengal, the Government of Bengal, the High Court, Government Treasury, etc.

ORDERS BY HIS EXCELLENCY THE GOVERNOR OF BENGAL.

No. 5796A.—10th July 1931.—Under the provisions of section 93 of the Government of India Act, His Excellency the Governor is pleased to accept the resignation tendered by Mr. E. C. Benthall of his office of member of the Bengal Legislative Council.

No. 5799A.—10th July 1931.—Whereas a vacancy has occurred in the Bengal Chamber of Commerce constituency of the Bengal Legislative Council by reason of the resignation by Mr. E. C. Benthall, His Excellency the Governor is pleased, in pursuance of sub-rule (*1*) of rule 26 of the Bengal Electoral Rules, to call upon the said constituency to elect a person for the purpose of filling the vacancy by the 31st July 1931

No. 5801A.—10th July 1931.—Whereas by notification No. 5799A., dated the 10th July 1931, His Excellency the Governor has been

pleased to call upon the Bengal Chamber of Commerce constituency of the Bengal Legislative Council to elect a member to the said Council in place of Mr. E. C. Benthall, resigned:

Now, therefore, the Governor in Council is pleased, in exercise of the powers conferred by clauses (*a*) and (*b*) of sub-rule (2) of rule 11 of the Bengal Electoral Rules, and in pursuance of sub-rule (3) of that rule, to prescribe the 17th July 1931 as the date for the nomination of candidates and for the delivery of nomination papers to the Returning Officer and the 18th July 1931 as the date on which the scrutiny of nominations shall be held.

R. N. REID,
Chief Secy to the Govt. of Bengal (offg.).

ORDERS BY THE GOVERNMENT OF BENGAL.

No. 5849A.

Appointments and Transfers.

GENERAL.

Midnapore.—No. 5134A.—1st July 1931.—The orders of the 2nd June 1931, appointing Babu Jyotish Chandra Chatarji, Deputy Magistrate and Deputy Collector, Midnapore, temporarily to have charge of the Sadar subdivision of the district, are cancelled.

Burdwan.—No. 5256A. — 3rd July 1931.—Babu Satish Chandra Upadhyaya, Deputy Magistrate and Deputy Collector, on leave, is posted to the headquarters station of the Burdwan district.

Mymensingh-Noakhali.—No. 5269A. — 4th July 1931.—Mr. Braja Kanta Guha, I.C.S., is appointed to act as an Additional District and Sessions Judge, Mymensingh, on relinquishing charge of his appointment as Additional District and Sessions Judge, Noakhali.

Burdwan-Mymensingh.—No. 5300A. — 4th July 1931.—Babu Phani Bhusan Chakrabatti, Deputy Magistrate and Deputy Collector, Burdwan, is transferred to the Tangail subdivision of the Mymensingh district.

Mymensingh-Bakarganj.—No. 5303A. —4th July 1931.—Maulvi Muhammad Shamsuddin, Deputy Magistrate and Deputy Collector, Tangail, Mymensingh, is transferred to the headquarters station of the Bakarganj district.

Bakarganj-Dacca.—No. 5305A. — 4th July 1931.—Maulvi Mirza Yahya Shirazi, Deputy Magistrate and Deputy Collector, Bakarganj, is transferred to the headquarters station of the Dacca district.

Rangpur.—No. 5316A.—4th July 1931.—Maulvi Mahmood Ahmad, Deputy Magistrate and Deputy Collector, on leave, is appointed to have charge of the Sadar subdivision of the Rangpur district.

Rajshahi.—No. 5325A. — 4th July 1931.—Maulvi Muhammad Abdullah, Deputy Magistrate and Deputy Collector, on leave, is posted to the headquarters station of the Rajshahi district.

Rajshahi-Tippera.—No. 5328A. — 4th July 1931.—Babu Amulya Kumar Guha, Deputy Magistrate and Deputy Collector, Rajshahi, is transferred to the Chandpur subdivision of the Tippera district.

Presy. Divn.—No. 5335A.—6th July 1931.—Babu Nutbihari Chatarji, Sub-Deputy Collector, on leave, is posted to the Presidency Division.

24-Parganas-Calcutta. — No. 5345A. — 6th July 1931. — Maulvi Adiluzzaman Khan, Deputy Magistrate and Deputy Collector, 24-Parganas, is appointed temporarily to be a Personal Assistant to the Commissioner of the Presidency Division.

Burdwan Divn.—No. 5440A.—6th July 1931.—Maulvi Shamsul Abedin, Sub-Deputy Collector, on leave, is posted to the Burdwan Division.

Dacca Divn.—No. 5443A.—6th July 1931.—The Sub-Deputy Collectors, on leave, named below, are posted to the Dacca Division:—

Maulvi Muhammad Ershad.
Babu Kshitish Chandra Barman.
Babu Charupada Ray.

Chittagong Divn.—No. 5448A. — 6th July 1931.—Maulvi Samiruddin Shah, Sub-Deputy Collector, on leave, is posted to the Chittagong Division.

Darjeeling-Burdwan. — No. 5701A. — 9th July 1931.—Mr. A. G. Allison, Deputy Magistrate and Deputy Collector, Darjeeling, is appointed to have charge of the Asansol subdivision of the Burdwan district.

Mymensingh-Birbhum.—No. 5704A. — 9th July 1931.—Mr. R. A. Dutch, I.C.S., Assistant Magistrate and Collector, Mymensingh, is appointed to have charge of the Rampurhat subdivision of the Birbhum district.

Jalpaiguri-Hooghly.—No. 5712A.—9th July 1931.—Mr. L. A. Chapman, I.C.S., Assistant Magistrate and Collector, Jalpaiguri, is appointed to have charge of the Serampore subdivision of the Hooghly district.

Bankura.—No. 5715A. — 9th July 1931.—Mr. Annada Sankar Ray, I.C.S., Assistant Magistrate and Collector, Bankura, is appointed to have charge of the Vishnupur subdivision of that district.

Pabna.—No. 5772A.—10th July 1931.—Rai Suresh Chandra Sinha Bahadur, Deputy Magistrate and Deputy Collector, on leave, is appointed to act as Magistrate and Collector, Pabna, during the absence, on leave, of Mr. Satyendra Mohan Banerjee, I.C.S., or until further orders.

POLICE.

Mymensingh.—No. 5163A.—2nd July 1931. —Mr Khondkar Fazle Sobhan, Assistant Superintendent of Police, on leave, is posted to the Netrakona subdivision of the Mymensingh district and is appointed to have charge of police work of that subdivision.

Bogra-Hooghly.—No. 5767A. — 10th July 1931.—Babu Surendra Nath Sen, officiating Deputy Superintendent of Police, Bogra, is transferred temporarily to the headquarters station of the Hooghly district.

ECCLESIASTICAL.

Calcutta.—No. 5274A.—4th July 1931.—In exercise of the power conferred on him by section 3 of Act V (B.C.) of 1881, the Governor in Council is pleased to appoint the Reverend G. E. Dodd to be a member of the Christian Burial Board for the town and suburbs of Calcutta, *vice* the Reverend G. C. Macpherson.

Confirmation.

GENERAL.

Calcutta.—No 5393A.—6th July 1931.—Mr. L. R. Faweus, I.C.S., officiating Secretary to the Government of Bengal in the Agriculture and Industries and Public Works Departments, is confirmed in that appointment.

No. 5717A.—9th July 1931.—The officers, named below, are confirmed in the grade of District and Sessions Judges, with effect from the dates mentioned opposite their names:—

Mr. Ram Chandra Ghosh—11th April 1931.
Mr Khagendra Nath Datta—16th May 1931.
Mr. Hari Jiban Banarji—19th June 1931.
Mr. Ashutosh Ray—1st July 1931.

No. 5760A.—10th July 1931.—Mr. G. P. Hogg, I.C.S., on leave, is appointed substantively to the grade of Magistrates and Collectors, with effect from the 6th July 1931.

Leave.

GENERAL.

No. 5130A.—1st July 1931.—Babu Jyotish Chandra Chatarji, Deputy Magistrate and Deputy Collector, is allowed leave on average pay, under rule 81 (*b*) (*ii*) of the Fundamental Rules, from the 9th June to the 31st August 1931, both days inclusive, in extension of the leave granted to him under the orders of the 21st April 1931.

No. 5144A —2nd July 1931.—Maulvi Saleh Ahmad, Deputy Magistrate and Deputy Collector, was on leave on average pay, under rule 81 (*b*) (*ii*) of the Fundamental Rules, from the 11th April to the 8th May 1931, inclusive.

No. 5338A.—6th July 1931.—Babu Ratindra Chandra Basu, Sub-Deputy Collector, is allowed leave on average pay, under rule 81 (*b*) (*ii*) of the Fundamental Rules, with effect from the 15th August 1931 or any subsequent date on which he may be relieved of his duties in the Settlement Department, up to 14th October 1931.

Burdwan.—No. 5342A.—6th July 1931. — Babu Upendra Mohan Basu, Deputy Magistrate and Deputy Collector, Burdwan, is allowed leave on average pay for three months, under rule 81 (*b*) (*ii*) of the Fundamental Rules, with effect from the 15th July 1931.

No. 5381A.—6th July 1931. — Babu Praphulla Kumar Mukharji, Sub-Deputy Collector, is allowed leave on average pay, under rule 81 (*b*) (*ii*) of the Fundamental Rules, from the 15th August 1931 or any subsequent date on which he may be relieved of his duties in the Settlement Department, up to the 14th October 1931.

Bakarganj.—No. 5630A.—8th July 1931.—Babu Kumaresh Ray, Deputy Magistrate and Deputy Collector, Bakarganj, is allowed leave on average pay for two months, under rule 81 (*b*) (*ii*) of the Fundamental Rules, with effect from the date on which he may avail himself of it.

Calcutta.—No. 5632A. — 8th July 1931.—Khan Bahadur Nasiruddin Ahmad, Additional Chief Presidency Magistrate, Calcutta, is allowed leave on average pay, under rule 81 (*b*) (*ii*) of the Fundamental Rules, from the 1st August 1931, or any subsequent date on which he may be relieved, up to the 17th November 1931.

Hooghly.—No. 5735A. — 9th July 1931.—Babu Gokul Chandra Mazumdar, Deputy Magistrate and Deputy Collector, Hooghly, is allowed leave on average pay for one month, under article 81 (*b*) (*ii*) of the Fundamental Rules, with effect from the 22nd June 1931, or any subsequent date on which he may avail himself of it.

Pabna.—No. 5768A.—10th July 1931.—Mr. Satyendramohan Banerjee, I.C.S., officiating Magistrate and Collector, Pabna, is allowed leave on average pay for seven months and three days, under the proviso to rule 81 (*b*) (*ii*) of the Fundamental Rules, with effect from the 10th August 1931, or any subsequent date on which he may be relieved.

No. 5815A.—11th July 1931 —Mr. R. Douglas, I.C.S., is allowed leave not due on half average pay for one day, under rule 81 (*c*) (*ii*) of the Fundamental Rules, in extension of the leave granted to him under the orders of the 19th May 1931.

R. N. RAU,
Chief Secy. to the Govt. of Bengal (offg.).

NOTIFICATION.

No. 5726A.—9th July 1931.—With the previous sanction of the Governor-General in Council and the Secretary of State in Council, and in continuation of the notification of this Government No. 56A.D., dated the 29th May 1930, the Governor in Council is pleased to notify that one additional superior executive office in the Presidency of Bengal, being an office ordinarily filled from amongst the members of the Indian Civil Service, shall, subject to the provisions of sub-section (1) of section section 99 of the Government of India Act, and in accordance with the rules made under sub-section (2) of that section, be filled by the appointment of a person not being a member of the Indian Civil Service.

R N. REID,
Chief Secy. to the Govt. of Bengal (offg.).

POLITICAL DEPARTMENT.

Political.

NOTIFICATION.

Noakhali.—No. 11540P.—10th July 1931.—In exercise of the power conferred by sub-section (3) of section 3 of the Ancient Monuments Preservation Act, 1904 (VII of 1904), the Governor in Council is pleased to confirm the notification No. 18325P., dated the 12th December 1930, published at page 1991, Part I of the *Calcutta Gazette*, dated the 18th December 1930, in which the following monument was declared to be a protected monument within the meaning of the said Act:—

Police-station Chhagalnaya, district Noakhali.—Colossal image and its inscribed fragments with the mound at Silua together with a margin of 15 feet on all sides of the mound.

R. N. REID,
Chief Secy. to the Govt. of Bengal (offg.).

Jails.

Orders by the Inspector-General of Prisons, Bengal.

No. 18552.—11th July 1931.—Dr. Probhat Chandra Mukherji made over charge of the Midnapore Central Jail to Major M. Das, I.M.S., on the forenoon of the 24th June 1931.

R. E. FLOWERDEW, LT.-COL., I.M.S.,
Inspr.-Genl. of Prisons, Bengal.

JUDICIAL DEPARTMENT.

No. 5850A.

Powers.

Tippera.—No. 5153A.—2nd July 1931.—Maulvi Ahmad Husain, Deputy Magistrate, Tippera, is vested with the power to try summarily the offences mentioned in section 260 of the Code of Criminal Procedure.

Birbhum.—No. 5260A.—3rd July 1931.—Khan Sahib Muhammad Raziuddin Ali, Deputy Magistrate, Birbhum, is vested with powers under section 110 of the Code of Criminal Procedure.

Calcutta.—No. 5276A.—4th July 1931.—The Reverend G. E Dodd, officiating Presidency Senior Chaplain, Church of Scotland, Bengal, is appointed, under the provisions of section 22, Act V of 1898, to act as a Justice of the Peace within the limits of the town of Calcutta.

Rajshahi.—No. 5733A.—9th July 1931.—In exercise of the power conferred by section 108 of the Code of Criminal Procedure, 1898 (Act V of 1898), the Governor in Council is pleased to invest Babu Brajabandhu Bhaumik, Deputy Magistrate, Rajshahi, with the powers necessary for the purposes of the said section.

Burdwan.—No. 5812A.—11th July 1931.—Babu Kalipada Das Gupta, Sub-Deputy Magistrate, Burdwan, is vested with the powers of a Magistrate of the third class.

R. N. REID,
Chief Secy. to the Govt. of Bengal (offg.).

Appointments and Transfers.

Burdwan.—No. 5110J.—6th July 1931.—In exercise of the powers conferred by sections 14 and 15 of the Code of Criminal Procedure, 1898 (Act V of 1898), the Governor in Council is pleased—

(*a*) to confer upon Maulvi Kazi Kayem Hossain the powers of a Magistrate of the third class, in the district of Burdwan, for a period of three years from the 13th July 1931, and

(*b*) to direct him to sit as a member of the Asansol bench in the said district.

24-Parganas.—No. 5112J.—6th July 1931.—In exercise of the powers conferred by sections 14 and 15 and the proviso to section 357 of the Code of Criminal Procedure, 1898 (Act V of 1898), the Governor in Council is pleased—

(*a*) to confer upon Babu Krishna Chandra Maitra the powers of a Magistrate of the second class, in the district of the 24-Parganas, for a period of three years from the 23rd July 1931,

in respect to such cases as may be made over to him within the limits of the Basirhat subdivision of the said district,

(*b*) to direct that he shall, in addition to sitting singly, sit as a member of the Basirhat bench in the said district, and

(*c*) to direct him to take down evidence in the English language.

24-Parganas.—No. 5114J.—6th July 1931.—In exercise of the powers conferred by sections 14 and 15 and the proviso to section 357 of the Code of Criminal Procedure, 1898 (Act V of 1898), the Governor in Council is pleased—

(*a*) to confer upon Maulvi Syed Hossain Ehtiza the powers of a Magistrate of the third class, in the district of the 24-Parganas, for a period of three years from the 23rd July 1931,

(*b*) to direct him to sit as a member of the Basirhat bench in the said district, and

(*c*) to direct him to take down evidence in the English language.

Hooghly.—No. 5119J.—6th July 1931.—In exercise of the powers conferred by sections 14 and 15 of the Code of Criminal Procedure, 1898 (Act V of 1898), the Governor in Council is pleased—

(*a*) to confer upon Mr. Thomas William Palmer the powers of a Magistrate of the third class, in the district of Hooghly, for a period of three years from the date of this notification, and

(*b*) to direct him to sit as a member of the Serampore bench in the said district.

Burdwan.—No. 5225J.—8th July 1931.—In exercise of the powers conferred by sections 14 and 15 and the proviso to section 357 of the Code of Criminal Procedure, 1898 (Act V of 1898), the Governor in Council is pleased—

(*a*) to confer upon Babu Biman Bihari Lal Singh Handey the powers of a Magistrate of the second class, in the district of Burdwan, for a period of three years from the 10th July 1931, in respect to such cases as may be made made over to him within the limits of the Asansol subdivision of the said district,

(*b*) to direct that he shall, in addition to sitting singly, sit as a member of the Asansol bench in the said district, and

(*c*) to direct him to take down evidence in the English language.

Nadia.—No. 5227J.—8th July 1931.—In exercise of the powers conferred by sections 14 and 15 and the proviso to section 357 of the Code of Criminal Procedure, 1898 (Act V of 1898), the Governor in Council is pleased—

(*a*) to confer upon Babu Panchanan Gangali the powers of a Magistrate of the second class, in the district of Nadia, for a period of three years from the 22nd July 1931, in respect to such cases as may be made over to him within the limits of the Ranaghat subdivision of the said district,

(*b*) to direct that he shall, in addition to sitting singly, sit as a member of the Ranaghat bench in the said district, and

(*c*) to direct him to take down evidence in the English language.

Resignation.

Howrah.—No. 5117J.—6th July 1931.—The Governor in Council is pleased to accept the resignation tendered by Babu Hari Pada Ghosal of his office as an Honorary Magistrate of the Uluberia bench in the district of Howrah.

Powers.

Pabna.—No.5108J.—6th July 1931.—In exercise of the power conferred by the proviso to section 357 of the Code of Criminal Procedure, 1898 (Act V of 1898), the Governor in Council is pleased to direct Babu Amrita Lal Chakrabatti, Honorary Magistrate of the Sadar bench in the district of Pabna, to take down evidence in the English language.

NOTIFICATIONS.

Bankura.—No. 5231J.—9th July 1931.—In exercise of the power conferred by section 65 of the Bengal Village Self-Government Act, 1919 (Bengal Act V of 1919), the Governor in Council is pleased to appoint the following members of the union boards mentioned below to be, during their term of office as such members, union benches within the jurisdiction of the union boards of which they are, respectively, members for the purposes of that section:—

Vishnupur subdivision, district Bankura.

Police-station Vishnupur.

Ajadhya union board.

Dr. Chandra Bhusan Banarji.
Babu Kedar Nath Misra.
Babu Arun Chandra Goswami.
Babu Ashutosh Chatarji.

Police-station Sonamukhi.

Hamirhati union board.

Babu Sarat Chandra Mukharji.
Babu Nagendra Nath Chakrabatti.
Babu Chandra Mohan Singha.
Babu Satish Chandra Kundu.

Nabasan union board.

Babu Sashi Bhusan Ray.
Babu Bibhuti Bhusan Chaudhuri.
Babu Surendra Nath Dwari.
Munshi Sheikh Mafijuddin.

Police-station Patrasayer.

Patrasayer union board.

Babu Dhirendra Nath Hazra.
Babu Radha Gobinda Mukharji.
Babu Charu Chandra Chatarji.
Babu Upendra Nath Hazra.

2. This notification will take effect from the date of the first meeting of the reconstituted union boards at which a quorum is present.

Bankura.—No. 5232J. — 9th July 1931.—In exercise of the power conferred by section 73 of the Bengal Village Self-Government Act, 1919 (Bengal Act V of 1919), the Governor in Council is pleased to appoint the following members of the union boards mentioned below to be, during their term of office as such members, union courts within the jurisdiction of the union boards of which they are, respectively, members for the purposes of that section:—

Vishnupur subdivision, district Bankura.

Police-station Vishnupur.

Ajadhya union board.

Dr. Chandra Bhusan Banarji.
Babu Kedar Nath Misra.
Babu Arun Chandra Goswami.
Babu Ashutosh Chatarji.

Police-station Sonamukhi.

Hamirhati union board.

Babu Sarat Chandra Mukharji.
Babu Nagendra Nath Chakrabatti.
Babu Chandra Mohan Singha.
Babu Satish Chandra Kundu.

Nabasan union board.

Babu Sashi Bhusan Ray.
Babu Bibhuti Bhusan Chaudhuri.
Babu Surendra Nath Dwari.
Munshi Sheikh Mafijuddin.

Police-station Patrasayer.

Patrasayer union board.

Babu Dhirendra Nath Hazra.
Babu Radha Gobinda Mukharji.
Babu Charu Chandra Chatarji.
Babu Upendra Nath Hazra.

2. This notification will take effect from the date of the first meeting of the reconstituted union boards at which a quorum is present.

Dacca.—No. 5234J.—9th July 1931.—In exercise of the power conferred by section 65 of the Bengal Village Self-Government Act, 1919 (Bengal Act V of 1919), the Governor in Council is pleased to appoint the following members of the Jampur union board within the Baidyerbazar police-station in the Narayanganj subdivision of the Dacca district to be during their term of office as such members, a union bench within the jurisdiction of the said union board for the purposes of that section:—

Babu Abani Kanta Banarji.
Maulvi Abdul Kadir Bhuiya.
Maulvi Abdul Malek Bhuiya.
Munshi Quazi Taizuddin Ahmed.

Dacca.—No. 5235J.—9th July 1931.—In exercise of the power conferred by section 73 of the Bengal Village Self-Government Act, 1919 (Bengal Act V of 1919), the Governor in Council is pleased to appoint the following members of the Jampur union board within the Baidyerbazar police-station in the Narayanganj subdivision of the Dacca district to be, during their term of office as such members, a union court within the jurisdiction of the said union board for the purposes of that section:—

Babu Abani Kanta Banarji.
Maulvi Abdul Kadir Bhuiya.
Maulvi Abdul Malek Bhuiya.
Munshi Quazi Taizuddin Ahmed.

Bankura.—No. 5238J.—9th July 1931.—In exercise of the power conferred by section 65 of the Bengal Village Self-Government Act, 1919 (Bengal Act V of 1919), the Governor in Council is pleased to appoint the following members of the union boards mentioned below to be, during their term of office as such members, union benches within the jurisdiction of the union boards of which they are, respectively, members for the purposes of that section:—

Sadar subdivision, district Bankura.

Police-station Chhatna.

Arra union board.

Babu Anath Bandhu Desmukh.
Babu Rajib Lochan Mandal.
Babu Abinash Chandra Mandal.
Maulvi Sheikh Abdul Gafoor.

Chhatna union board.

Babu Surendra Nath Sen.
Maulvi Sheikh Etbar Khan.
Babu Ram Gopal Deghoria.
Babu Gati Gobinda Goswami.

Police-station Gangajalghati.

Barasal union board.

Babu Bhola Nath Mandal.
Babu Jugal Kishore Mandal.
Babu Hem Chandra Tewari.
Babu Sarbeswar Mandal.

Police-station Mejia.

Mejia union board.

Babu Rakhal Chandra Ghosh.
Babu Subodh Chandra Topadar.
Babu Sashi Bhusan Dubey.
Babu Amulya Ratan Pal.

Police-station Saltora.

Salma union board.

Babu Kali Pada Sen Gupta.
Babu Nalinakshya Sen Gupta.
Babu Hari Pada Chaudhuri.
Babu Hrishikesh Banarji.

2. This notification will take effect from the date of the first meeting of the reconstituted union boards at which a quorum is present.

Bankura.—No. 5239J.—9th July 1931.—In exercise of the power conferred by section 73 of the Bengal Village Self-Government Act, 1919 (Bengal Act V of 1919), the Governor in Council is pleased to appoint the following members of the union boards mentioned below to be, during their term of office as such members, union courts within the jurisdiction of the union boards of which they are, respectively, members for the purposes of that section:—

Sadar subdivision, district Bankura.

Police-station Chhatna.

Arra union board.

Babu Anath Bandhu Desmukh.
Babu Rajib Lochan Mandal.
Babu Abinash Chandra Mandal.
Maulvi Sheikh Abdul Gafoor.

Chhatna union board.

Babu Surendra Nath Sen.
Maulvi Sheikh Etbar Khan.
Babu Ram Gopal Deghoria.
Babu Gati Gobinda Goswami.

Police-station Gangajalghati.

Barasal union board.

Babu Bhola Nath Mandal
Babu Jugal Kishore Mandal.
Babu Hem Chandra Tewari.
Babu Sarbeswar Mandal.

Police-station Mejia.

Mejia union board.

Babu Rakhal Chandra Ghosh.
Babu Subodh Chandra Topadar.
Babu Sashi Bhusan Dubey.
Babu Amulya Ratan Pal.

Police-station Saltora.

Salma union board.

Babu Kali Pada Sen Gupta.
Babu Nalinakshya Sen Gupta.
Babu Hari Pada Chaudhuri.
Babu Hrishikesh Banarji.

2. This notification will take effect from the date of the first meeting of the reconstituted union boards at which a quorum is present.

Mymensingh.—No. 5241J.—9th July 1931.—In exercise of the power conferred by section 65 of the Bengal Village Self-Government Act, 1919 (Bengal Act V of 1919), the Governor in Council is pleased to appoint Babu Umesh Chandra De, a member of the Chandpur union board, within the Katiadi police-station in the Kishoreganj subdivision of the Mymensingh district, to be, during his term of office as such member, a member of the union bench within the jurisdiction of the said union board for the purposes of that section, *vice* Babu Banka Behari Datta, resigned.

Mymensingh.—No. 5242J.—9th July 1931.—In exercise of the power conferred by section 73 of the Bengal Village Self-Government Act, 1919 (Bengal Act V of 1919), the Governor in Council is pleased to appoint Babu Umesh Chandra De, a member of the Chandpur union board within the Katiadi police-station in the Kishoreganj subdivision of the Mymensingh district, to be, during his term of office as such member, a member of the union court within the jurisdiction of the said union board for the purposes of that section, *vice* Babu Banka Behari Datta, resigned.

Tippera.—No. 5244J.—9th July 1931.—In exercise of the power conferred by section 65 of the Bengal Village Self-Government Act, 1919 (Bengal Act V of 1919), the Governor in Council is pleased to appoint the following members of the union boards mentioned below to be, during their term of office as such members, union benches within the jurisdiction of the union boards of which they are, respectively, members for the purposes of that section:—

Chandpur subdivision, district Tippera.

Police-station Hajiganj.

Hatila union board.

Maulvi Selamatullah Chaudhuri.
Babu Rohini Kumar Chakrabatti.
Maulvi Amjadali Patari.
Babu Paresh Nath Banarji.

Tamta union board.

Maulvi Fazle Ali Meah.
Babu Satindra Mohan Majumdar.
Babu Kali Charan Chakrabatti.
Munshi Kazimuddin Bhuiya.

Kalacho union board.

Maulvi Jonabali Majumdar.
Maulvi Muhammad Idris.
Babu Sudhindra Kumar Ray.
Maulvi Abdul Kadir Majumdar.

Roysree union board.

Babu Kula Chandra Majumdar.
Babu Golak Chandra Das.
Maulvi Jahayaral Huq.
Maulvi Muhammad Faiz Majumdar.

Tippera.—No. 5245J.—9th July 1931.—In exercise of the power conferred by section 73 of the Bengal Village Self-Government Act, 1919 (Bengal Act V of 1919), the Governor in Council is pleased to appoint the following members of the union boards mentioned below to be, during their term of office as such members, union courts within the jurisdiction of the union boards of which they are, respectively, members for the purposes of that section:—

Chandpur subdivision, district Tippera.

Police-station Chandpur.

Bishnupur union board.

Munshi Golam Mustafa Chaudhuri.
Babu Narendra Kumar Majumdar.
Maulvi Abdul Latif Meah.
Maulvi Gholam Sattar Chaudhuri.

Ibrahimpur union board.

Babu Annada Charan Chakrabatti.
Babu Ganesh Chandra De.
Munshi Siddiq Ali Dewan.
Maulvi Abdul Aziz Majumdar.

Police-station Matlab.

Mohanpur union board.

Maulvi Abdul Hamid Mea.
Munshi Nawabali Mea.
Munshi Serajuddin Patari.
Babu Ambika Charan De Sarkar.

Police-station Hajiganj.

Hatila union board.

Maulvi Selamatulla Chaudhuri.
Maulvi Amjadali Patwari.
Babu Paresh Nath Banarji.
Maulvi Jalaluddin.
Babu Karuna Chandra Chakrabatti.

Tamta union board.

Maulvi Fazle Ali Meah.
Maulvi Hafiz Saiyed Mohammed.
Babu Satindra Mohan Majumdar.
Babu Kali Charan Chakrabatti.

Kalacho union board.

Maulvi Jonabali Majumdar.
Maulvi Mohammed Ibrahim Majumdar.
Babu Krishna Chandra Saha.
Maulvi Ibrahim Molla.

J. W. NELSON,
Secy. to the Govt. of Bengal.

LOCAL SELF-GOVERNMENT DEPARTMENT.

NOTIFICATIONS.

Minister-in-charge: The Hon'ble Mr. Bijoy Prasad Singh Roy.

24-Parganas.—No. 2587M.—7th July 1931.—In exercise of the power conferred by section 27 of the Bengal Municipal Act, 1884 (Bengal Act III of 1884), the Government of Bengal (Ministry of Local Self-Government) are pleased to appoint Maulvi Abul Hasan Chaudhuri, as a Commissioner of the Taki Municipality, in the district of the 24-Parganas, *vice* Maulvi Enayet Rasul, resigned.

Midnapore. — No. 2624L.S.-G.—10th July 1931.—In exercise of the power conferred by section 38 of the Bengal Local Self-Government Act, 1885 (Bengal Act III of 1885), the Government of Bengal (Ministry of Local Self-Government) are pleased to constitute the following group of villages in the district of Midnapore into a union:—

District board—Midnapore.

Thana—Daspur.

Name of union—Gucchati.

Number of members of the union committee—9.

Names of villages (revenue mauzas) constituting the union with jurisdiction list number.

Guchhati	...	...	161
Singha Chak	...	...	162
Chak Sultan	...	...	163
Jot Gobordhan	...	...	167
Jot Bhagaban	...	...	168
Chak Kishor	...	...	169
Sayla	...	...	171
Sonakhali	...	...	172
Tajpur	...	...	173
Rana	...	...	176
Sahachak	...	...	177
Mahakalpota	...	...	178
Mismat Sayla	...	...	179
Kelegoda	...	...	174
Juakhali	...	...	175
Bhuta	...	...	187
Ghabashyambati	...	...	188
Bishnupur	...	...	189
Udychak	...	...	215

2. In exercise of the power conferred by section 41 of the same Act, the Government of Bengal (Ministry of Local Self-Government) are pleased to direct that three of the members of the said Gucchati union shall be appointed by the Commissioner of the Burdwan Division and six of them shall be elected as prescribed by section 39 of the said Act.

3. This cancels notification No. 3338 L.S.-G., dated the 9th November 1925, sanctioning the establishment of a union committee at Sonakhali.

Midnapore.—No. 2625L.S.-G. — 10th July 1931.—In exercise of the power conferred by section 38 of the Bengal Local Self-Government Act, 1885 (Bengal Act III of 1885), the Government of Bengal (Ministry of Local Self-Government) are pleased to constitute the following group of villages in the district of Midnapore into a union:—

District board—Midnapore.

Thana—Chandrakona.

Name of union—Jara.

Number of members of the union committee—9.

Names of villages (revenue mauzas) constituting the union with jurisdiction list number.

Bakcha	...	...	19
Kherjubani	...	...	20
Bhandaria	...	...	21
Kalapat	...	...	22
Pathra	...	...	160
Karanji	...	...	161
Shuri Puskarini	...	...	162
Sola	...	...	163
Harinarayanpur	...	...	164
Tatarpur	...	...	165
Ramkrishnapur	...	...	166
Bhatahar	...	...	170
Simana	...	...	171
Naranchak	...	...	174
Nekarbag	..	...	175
Tegerya Dharamapur		...	154
Ghola	...	...	155
Panchmahar	...	...	167
Saoragerya	...	...	168
Sita Sol	...	...	169
Belgerya	...	...	194
Hatpukur	...	...	195
Arjungeria	...	...	196
Jara	...	...	152
Madhabpur	...	...	172

2. In exercise of the power conferred by section 41 of the same Act the Government of Bengal (Ministry of Local Self-Government) are pleased to direct that three of the members of the said Jara union shall be appointed by the Commissioner of the Burdwan Division and six of them shall be elected as prescribed by section 39 of the said Act.

3. This cancels notification No. 3339 L.S.-G., dated the 9th November 1925.

No. 2614L.S.-G.—10th July 1931.—The following draft of an amendment, which in exercise of the powers conferred by clauses (*i*) and (*t*) of section 138 of the Bengal Local Self-Government Act of 1885 (Bengal Act III of 1885), the Government of Bengal (Ministry of Local Self-Government) intend to make in the rules published with notification No. 2158-L. S.-G., dated the 5th September 1918, as subsequently amended, is published for the information of persons affected thereby.

2. The draft will be taken into consideration on the 1st September 1931, and any objection or suggestion received by the undersigned before that date will be duly considered:—

Draft amendment.

After rule 14 under heading "General Instructions" *add* the following rule:—

"14A. Notwithstanding anything contained in these rules, no expenditure shall be incurred on any scheme involving a departure from the approved budget and a cost of more than Rs. 2,000 unless such scheme has been previously approved by—

(*i*) the Public Works and Finance Committees, and

(*ii*) a majority of not less than two-thirds of the members of the district board."

Nadia.—No. 2633M.—10th July 1931.—In exercise of the power conferred by section 14 of the Bengal Municipal Act, 1884 (Bengal Act III of 1884), the Government of Bengal (Ministry of Local Self-Government) are pleased to appoint the following gentlemen to be Commissioners of the Kushtia Municipality in the district of Nadia:—

Mr. R. A. MacLeod May.

Babu Tarapada Mazumdar.

Babu Suresh Chandra Chatarji.

Babu Hariram Agarwala.

Maulvi Kutubuddin Ahmed.

CORRIGENDA.

No. 2622M.—10th July 1931.—In Government notification No. 2353M., dated the 19th June 1931, published at page 730 of Part I of the *Calcutta Gazette*, dated the 25th June 1931, *for* "Babu Ram Das Singh" *read* "Babu Ram Deo Singh."

No. 2637M.—10th July 1931.—In Government notification No. 1665M., dated the 22nd April 1931, published at page 503 of Part I of the *Calcutta Gazette*, dated the 30th April 1931, *for* "Mozzamal Haque" *read* "Mozammel Huque."

Medical.

Minister-in-charge: The Hon'ble Mr. Bijoy Prasad Singh Roy.

Calcutta.—No. 2044Medl.—4th July 1931.—Lt.-Col. K. K. Chatterji, F.R.C.S.I., I.T.F., officiating Superintendent, Campbell Medical School and Hospital, Calcutta, is granted leave for four months from the date of relief.

Calcutta.—No. 2046Medl.—4th July 1931.—Dr. Mohendra Kumar Chakravarti, Superintendent, Bengal Vaccine Depot, Calcutta, is allowed leave for six months, with effect from 30th May 1931, viz., leave on average pay for four months, under Fundamental Rule 81 (*b*) (*ii*), and leave on half average pay for the remaining period, under Fundamental Rule 81 (*d*).

Dacca-Calcutta.—No. 2047Medl.—4th July 1931.—Dr. Abdul Majed, D.T.M., D.P.H. (Cal.), Teacher of Anatomy, Dacca Medical School, is appointed to act as Superintendent, Bengal Vaccine Depot, Calcutta, from the 30th May 1931 to 31st March 1932, or until further orders.

24-Parganas.—No. 2108Medl. — 9th July 1931.—Lt.-Col. A. Denham White, I.M.S., Civil Surgeon, 24-Parganas, was granted leave on average pay with effect from the 2nd June 1931 to the 16th June 1931, under Fundamental Rule 81 (*b*) (*i*).

This cancels the notification No. 1737Medl., dated the 2nd June 1931.

24-Parganas.—No. 2109Medl. — 9th July 1931.—Lt.-Col. A. Denham White, I.M.S., on return from leave, is appointed as Civil Surgeon, 24-Parganas.

Calcutta.—No. 2111Medl.—9th July 1931.—Notification No. 1708Medl., dated the 30th May 1931, granting Assistant Surgeon Dr. Profulla Prasun Choudhury, Demonstrator of Physiology, Medical College, Calcutta, leave on average pay for one month, under Fundamental Rule 81 (*b*) (*ii*), with effect from the 1st May 1931, is hereby cancelled.

Murshidabad.—No. 2162Medl. — 10th July 1931.—Major S. Nag, I.M.S., is appointed as Civil Surgeon, Murshidabad, with effect from the date on which he takes over charge, *vice* Major N. C. Kapur, I.M.S., transferred.

Murshidabad - Chittagong.—No. 2163Medl. —10th July 1931.—Major N. C. Kapur, I.M.S., Civil Surgeon, Murshidabad, is, on relief, posted as Civil Surgeon, Chittagong, *vice* Rai Dr. Jnanendra Nath Chatterji Bahadur.

C. W GURNER,
Secy. to the Govt. of Bengal.

CALCUTTA, THE 9TH JULY 1931.

RESOLUTION—No. 2113Medl.

Minister-in-charge: The Hon'ble Mr. Bijoy Prasad Singh Roy.

Read—

This department resolution No. 1023Medl., dated the 26th March 1930, constituting a visiting committee for the Medical College group of hospitals, Calcutta.

As the term of office of the Committee of Visitors formed under the resolution cited in the preamble has expired the Government of Bengal (Ministry of Local Self-Government) have decided to reconstitute the Committee as shown below:—

President.

Member, Board of Revenue, Bengal (*ex officio*).

Secretary.

Secretary, Board of Revenue, Bengal (*ex officio*).

Members.

(1) Kaviraj Satyabrata Sen—Representative of Calcutta Corporation.

(2) Dr. Santiram Chatterjee—Representative of the Calcutta Corporation.

(3) Mr. S. C. Mitter—Representative of the Bengal National Chamber of Commerce.

(4) Babu Hemendra Nath Chatterjee, B.L., Advocate—Representative of the Bengal Mahajan Sabha.

(5) Chief Secretary of the Salvation Army —Representative of the Salvation Army.

(6) Right Rev. Mgr. J. Fernandes—Representative of the Roman Catholic Mission.

(7) Mr. L. T. Maguire, M.L.C.—Representative of the Calcutta Hospital Nurses' Institution.

(8) Mr. Anandji Haridas—Representative of the Calcutta Hospital Nurses' Institution.

(9) Lieut.-Colonel H. A. J. Gidney, M.L.A., F.R.S. (E), J.P., I.M.S. (Retd.)—Representative of the Anglo-Indian and Domiciled European Association.

(10) Mrs. Stanley of Palace Court.

(11) Lady Coyajee.

(12) Mrs. Sarojini De, O.B.E.

(13) Mr. Abdur Raheem, C.I.E., M.L.C.

(14) Mr. Abdul Aziz Khan of Messrs. Mayer Abdullah Ali Reja & Co.

(15) Mr. D. J. Cohen.

(16) Mr. R. H. M. Rustomjee.

(17) Mr. S. M. Bose, M.L.C.

(18) Dr. Rai U. N. Brahmachari Bahadur, M.A., M.D., Ph.D.

(19) Reverend Superior of the Oxford Mission. (He will have power to depute any representative of the Mission to visit the Hospitals in his place).

(20) Rev. B. A. Nag, M.L.C.—Representative of the Indian Christian Community.

(21) Rai Bahadur Dr. Haridhan Dutt, M.L.C.

(22) Babu Gokul Chand Boral, M.L.C.

A representative of the Marwari Chamber of Commerce as well as of the Bengal Chamber of Commerce will be added to the Committee later on on receipt of the nominations of each of the Chambers.

The manner in which the Committee will discharge its duties is as follows:—

The members will not visit the hospitals individually; the Committee will form itself into groups of not less than five members, each group in turn will, according to a roster to be kept for the purpose, visit the hospitals on a fixed day and at a fixed time in each month. In addition to these visits at fixed times the members will pay unexpected visits to the hospitals, provided that they do not go at times which are inconvenient to the hospital authorities. If all the five members of the group are not present, the remaining members can go round without the absentee or absentees, as the case may be. The members constituting the group should inspect the internal arrangements and offer such suggestions regarding the administration of the institution as they think proper. The Committee as a whole will meet at least once a quarter, review the reports of the visiting groups and discuss the remedial measures adopted. The Superintendent of the Medical College Hospitals should attend the meetings of the Visiting Committee.

A visitor's book will be kept in the hospitals in which the recommendations of the Committee will be recorded. The Superintendent will note on the margin the action taken on each recommendation with any other remarks or explanations that he may wish to offer. He will transmit a copy of the entries without delay to the Surgeon-General with the Government of Bengal for consideration. The Surgeon-General will take such further action as may seem necessary and will bring to the notice of Government any matter which he thinks sufficiently important. The members will hold office for one year from the date of appointment.

By order of the Government of Bengal
(Ministry of Local Self-Government),

C. W. GURNER,
Secy. to the Govt. of Bengal.

NOTIFICATION.

Minister-in-charge: The Hon'ble Mr. Bijoy Prasad Singh Roy.

Howrah.—No. 2054Medl.—6th July 1931.—The Government of Bengal (Ministry of Local Self-Government) are pleased to appoint the following gentlemen as non-official members of the committee for the management of the Howrah General Hospital:—

Mr. Kanai Lal Jatia.

Rai Ashutosh Bose Bahadur.

Mr. J. C. Robertson.

Mr. J. D. Spencer.

Mr. M. M. King.

Mr. W. Gow.

Mr. Bholanath Roy.

Mr. Jatindra Nath Ghosh.

Mr. B. C. Dutt.

Dr. P. K. Banerjee.

Public Health.

NOTIFICATION.

Minister-in-charge: The Hon'ble Mr. Bijoy Prasad Singh Roy.

Jalpaiguri.—No. 1616P.H.—6th July 1931.—In exercise of the power conferred by section 370 of the Bengal Municipal Act, 1884 (Bengal Act III of 1884), the Government of Bengal (Ministry of Public Health) are pleased to sanction the water-supply scheme submitted by the Commissioners of the Jalpaiguri Municipality, the particulars of which were published with notification No. 242P.H., dated the 21st January 1930.

Government are also pleased, in exercise of the same power, to sanction the portion of the scheme for the construction of tube-wells required for the waterworks, the particulars of which were published with notification No. 188P.H., dated the 17th January 1931.

C. W. GURNER,
Secy. to the Govt. of Bengal.

EDUCATION DEPARTMENT.

NOTIFICATIONS.

Darjeeling.—No. 1843Edn.—10th July 1931.—Miss B. M. Cooper, Art Mistress, Dow Hill Girls' School, Kurseong, was allowed leave on average pay, on medical certificate, for the period from the 16th March to the 14th May 1931 (both days inclusive), under the proviso to rule 81 (*b*) (*ii*) of the Fundamental Rules.

Minister-in-charge: The Hon'ble Mr. K. Nazim-ud-Din, C.I.E.

Calcutta.—No. 1776Edn. — 6th July 1931. —The services of Sir Jahangir Cooverjee Coyajee, KT., officiating Principal, Presidency College, Calcutta, are temporarily placed at the disposal of the Government of India in the Legislative Department, with effect from the 6th August 1931.

Hooghly.—No. 1834Edn.—9th July 1931.—Babu Bhabesh Chandra Banarji, Professor of Sanskrit, Hooghly College, is appointed to act, until further orders, as Vice-Principal of the college on his own pay in the Bengal Educational Service and in addition to his own duties, with effect from the 14th July 1931, or any subsequent date on which he takes over charge.

Hooghly.—No. 1835Edn.—9th July 1931.—Babu Narendra Nath Chatarji, Demonstrator in Physics, Hooghly College, in the Subordinate Educational Service, is appointed to act as a Professor of Physics in that college and in the Bengal Educational Service, with effect from the date on which he assumes the duties of the post, during the absence, on leave, of Babu Purna Chandra Bhattacharji, or until further orders.

Calcutta-Rajshahi Divn. — No. 1838Edn.—9th July 1931.—Khan Bahadur Maulvi Tasaddak Ahmad, officiating Additional Assistant Director of Public Instruction, Bengal, is appointed to act, until further orders, as Inspector of Schools, Rajshahi Division, on his own pay in the Bengal Educational Service, *vice* Khan Bahadur Maulvi Alfaz-ud-din Ahmad, on deputation.

Presidency Divn.-Calcutta. — No. 1839Edn. —9th July 1931.—Mr. Jitendra Mohan Sen, officiating Second Inspector of Schools, Presidency Division (Nadia and Murshidabad), is appointed to act as Additional Assistant Director of Public Instruction, Bengal, *vice* Khan Bahadur Maulvi Tasaddak Ahmad, on deputation.

Midnapore-Presidency Divn.—No. 1840Edn. —9th July 1931.—Babu Paresh Chandra Mukharji, District Inspector of Schools, Midnapore, now officiating Second Inspector of Schools, Presidency Division, *vice* Khan Sahib Maulvi Abul Hashem Khan Chaudhuri, on leave, is appointed to act as Second Inspector of Schools, Presidency Division, on his own pay in the Bengal Educational Service *vice* Mr. Jitendra Mohan Sen, on deputation.

Howrah-Dacca.—No. 1881Edn.—13th July 1931.—Mr. Birendra Chandra Gupta, Professor, Bengal Engineering College, is appointed to act as Principal, Ahsanullah School of Engineering, Dacca, with effect from the date on which he joins the appointment, *vice* Mr. C. J. Henderson, on deputation, or until further orders.

Registration.

NOTIFICATIONS.

Minister-in-charge: The Hon'ble Mr. K. Nazim-ud-Din, C.I.E.

Birbhum.—No. 575Regn.—6th July 1931.—In exercise of the power conferred by section 3 of the Bengal Muhammadan Marriages and Divorces Registration Act, 1876 (Bengal Act I of 1876), the Government of Bengal (Ministry of Education) are pleased to appoint Maulvi Abdul Gafar Khan temporarily to be a Muhammadan Registrar within the police-station of Dubrajpur, in the district of Birbhum, during the absence, on leave, of Maulvi Mashtaq Hossain Khan, or until further orders.

Birbhum.—No. 576Regn.—6th July 1931.—In exercise of the power conferred by section 2 of the Kazis' Act, 1880 (Act XII of 1880), the Government of Bengal (Ministry of Education) are pleased to appoint Maulvi Abdul Gafar Khan temporarily to be the Kazi for the celebration of marriages and the performance of other rites and ceremonies within the police-station of Dubrajpur, in the district of Birbhum, during the absence, on leave, of Maulvi Mashtaq Hossain Khan, or until further orders.

Jessore.—No. 586Regn. — 9th July 1931.—In exercise of the power conferred by section 3 of the Bengal Muhammadan Marriages and Divorces Registration Act, 1876 (Bengal Act I of 1876), the Government of Bengal (Ministry of Education) are pleased to appoint Maulvi Syed Abul Maksud Muhammad Nural Alam to be a Muhammadan Registrar within the police-station of Jessore, in the district of Jessore.

Jessore.—No. 587Regn. — 9th July 1931.—In exercise of the power conferred by section 2 of the Kazis' Act, 1880 (Act XII of 1880), the Government of Bengal (Ministry of Education) are pleased to appoint Maulvi Syed Abul Maksud Muhammad Nural Alam to be the Kazi for the celebration of marriages and the performance of other rites and ceremonies within the police-station of Jessore, in the district of Jessore.

A. J. DASH,

Secy. to the Govt. of Bengal.

Orders by the Director of Public Instruction, Bengal.

BENGAL EDUCATIONAL SERVICE.

Dacca Division.—No. 23B.—7th July 1931.—Miss Lilabati Ghosh, Assistant Inspectress of Schools, Dacca Division (Bakarganj and Faridpur), in the Women's Branch of the Bengal Educational Service, is declared, under article 260 of the Civil Service Regulations, to have been on privilege leave for thirteen days, with effect from the 30th May 1931.

2. She was permitted to prefix to her leave the Mohurrum holidays on the 28th and 29th May 1931.

3. This cancels this office notification No. 18B., dated the 6th June 1931, granting the officer leave for eight days from the 30th May 1931.

Dacca.—No. 24B.—7th July 1931.—Babu Pramatha Nath Das Gupta, District Inspector of Schools, Dacca, in the Bengal Educational Service, is granted, under article 260 of the Civil Service Regulations, privilege leave for twenty-two days, with effect from the 16th June 1931, or any subsequent date on which he avails himself of the leave.

J. M. BOTTOMLEY,

Director of Public Instrn., Bengal (offg.).

Orders by the Inspector-General of Registration, Bengal.

Hooghly.—No. 444.—6th July 1931.—Babu Girindra Nath Ray, Sub-Registrar, is allowed leave on average pay for twenty-six days, under rule 81 (*b*) (*ii*) of the Fundamental Rules, in extension of the leave granted to him in this department notification No. 327, dated the 14th May 1931.

Jessore.—No. 445.—6th July 1931.—Babu Bidhu Bhusan Chatarji, Sub-Registrar of Kaliganj, in the district of Jessore, is allowed leave on average pay for one month, under rule 81 (*b*) (*ii*) of the Fundamental Rules, in extension of the leave granted to him in this department notification No. 33, dated the 19th January 1931.

Calcutta-Jessore.—No. 446.—6th July 1931.—Maulvi Shahjehan Muhammad Abdul Mayeed, Probationary Sub-Registrar of Calcutta, acted as Sub-Registrar of Kaliganj, in the district of Jessore, from the afternoon of the 17th February 1931 to the 17th June 1931, during the absence, on leave, of Babu Bidhu Bhusan Chatarji, Sub-Registrar.

Bogra.—No. 447.—7th July 1931.—Maulvi Abul Khair Muhammad Abdul Jabbar, Sub-Registrar, under orders of transfer to Sherpur, in the district of Bogra, is allowed leave on average pay for one month, under rule 81 (*b*) (*ii*) of the Fundamental Rules, with effect from the 16th June 1931.

Faridpur.—No. 448.—8th July 1931.—Babu Kiran Chandra Maulik, Sub-Registrar attached to Faridpur, on being relieved of his officiating appointment as Sub-Registrar of Kasiani in the same district, is allowed leave on average pay for one month, under rule 81 (*b*) (*ii*) of the Fundamental Rules, with effect from the date on which he may be relieved.

Jessore-Faridpur.—No. 449.—8th July 1931.—Maulvi Abdul Khaleque Khan, Sub-Registrar of Harinakund, in the district of Jessore, on leave, is appointed to act as Sub-Registrar of Kasiani, in the district of Faridpur, with effect from the date he joins the appointment, during the absence, on leave, of Babu Surendra Lal Datta, Sub-Registrar, or until further orders.

Hooghly.—No. 450.—8th July 1931.—Babu Girindra Nath Ray, Sub-Registrar, on leave, is appointed to be Sub-Registrar of Dhanikhali, in the district of Hooghly.

Faridpur.—No. 451.—9th July 1931.—Maulvi Syed Muhammad Abdullah, Sub-Registrar of Pangsa, in the district of Faridpur, is allowed leave on average pay for one month, under rule 81 (*b*) (*ii*) of the Fundamental Rules, in extension of the leave granted to him in this department notification No. 92, dated the 10th February 1931.

Faridpur.—No. 452.—9th July 1931.—Maulvi Syed Muhammad Abdullah, Sub-Registrar of Pangsa, in the district of Faridpur, is allowed leave on average pay for one month and fifteen days, under rule 81 (*b*) (*ii*) of the Fundamental Rules, with effect from the 15th June 1931.

Rajshahi-Faridpur.—No. 453.—9th July 1931.—Babu Manindra Kumar Maitra, Probationary Sub-Registrar of Rajshahi, is appointed to act as Sub-Registrar of Pangsa, in the district of Faridpur, with effect from the 15th June 1931, during the absence, on leave, of Maulvi Syed Muhammad Abdullah, the permanent incumbent, or until further orders.

Khulna.—No. 454.—10th July 1931.—Babu Mani Bhusan Ray Chaudhury, Sub-Registrar of Islamkati, in the district of Khulna, is allowed leave on average pay for twenty-eight days, under rule 81 (*b*) (*ii*) of the Fundamental Rules, with effect from the 20th June 1931.

Murshidabad - Nadia.—No. 455.—10th July 1931.—Babu Narmada Ranjan Das Gupta, Probationary Sub-Registrar of Berhampore, Murshidabad, is posted temporarily to Krishnagar, Nadia.

Jessore.—No. 456.—11th July 1931.—Babu Jatindra Nath Basu, Sub-Registrar of Narail, in the district of Jessore, is allowed leave on average pay for two months, under rule 81 (*b*) (*ii*) of the Fundamental Rules, with effect from the date on which he may be relieved.

Calcutta-Jessore.—No. 457.—11th July 1931.—Babu Saurendra Nath Sen, Probationary Sub-Registrar of Calcutta, is appointed to act as Sub-Registrar of Narail, in the district of Jessore, with effect from the date on which he joins the appointment, during the absence, on leave, of Babu Jatindra Nath Basu, the permanent incumbent, or until further orders.

S. AHMAD,

Inspector-General of Regn., Bengal.

FINANCE DEPARTMENT.

Audit.

ADDENDUM AND CORRIGENDUM.

No. 2855F.—11th July 1931.—The following correction, which has been authorised, is published for general information:—

The Fundamental and Subsidiary Rules, 1st edition (Reprint), 1929.

Pages 1-2—S. R. 1.—*Insert* the following as Note 2 numbering the existing one as Note 1:—

NOTE 2.—This rule applies only to those inferior servants who are shown on the establishment lists. Only the following kinds of leave may be granted to menials paid from contingencies:—

(1) Leave without any allowances.

(2) Hospital leave under S. R. 269.

(3) Casual leave subject to the general rules regarding the grant of such leave.

E. N. BLANDY,

Secy. to the Govt. of Bengal.

COMMERCE DEPARTMENT.

NOTIFICATION.

No. 3311Com.—11th July 1931.—In exercise of the powers conferred by section 29 of the Indian Trade Unions Act, 1926 (XVI of 1926), the Governor in Council is pleased to make the following amendment in the Trade Union Regulations, 1927, published with notification No. 2188Com., dated the 24th March 1927, as subsequently amended:—

Amendment.

For Regulation 8 of the said Regulations, the following shall be substituted, namely:—

"8. The Registrar shall when he proposes to withdraw or cancel the certificate of registration of a Trade Union under clause (*b*) of section 10 of the Act cause a notice in Form E to be served on the Trade Union through its Secretary in person or by registered post with a form for acknowledgment."

E. N. BLANDY,

Secy. to the Govt. of Bengal.

MARINE DEPARTMENT.

NOTIFICATION.

No. 29Mne.—The 11th July 1931.—In exercise of the powers conferred by section 29 of the Inland Steam-vessels Act, 1917 (1 of 1917), and with the previous sanction of the Governor-General in Council, the Governor in Council is pleased to make the following rules relating to the grant of certificates of competency to engineers and engine-drivers of inland steam and motor-vessels, in supersession of notification No. 30 Marine, dated the 25th February 1918.

E. N. BLANDY,
Secy. to the Govt. of Bengal.

Rules relating to the Examination of Engineers and Engine-drivers of inland steam and motor-vessels.

1. **Certificates of competency to be granted to persons who pass requisite examinations.**—Certificates of competency will be granted to those persons who pass the requisite examinations and otherwise comply with the requisite conditions. For this purpose examiners have been appointed and arrangements have been made for holding the examinations periodically at the Ports of Calcutta and Chittagong, and at Goalundo in the Faridpur district.

2. **Examinations to be continued till all the candidates are examined.**—The examinations will commence early in the forenoon, and will be continued until all the candidates whose names appear upon the list of the Principal Officer, Mercantile Marine Department, Calcutta district, Calcutta, or Nautical Surveyor, Chittagong, or of the Subdivisional Officer, Goalundo, on the day of examination are examined.

3. **Application how to be made.**—Candidates for examination must make their applications in form Exn. 1, which must be filled in at the Port Office, Calcutta or Chittagong, or at the Subdivisional Office, Goalundo.

Candidates unable to write English must apply at the Port Office, Calcutta or Chittagong, or at the Subdivisional Office, Goalundo, for a copy of form Exn. 1, and the same must be filled in before the Principal Officer, Mercantile Marine Department, Calcutta district, Calcutta, or Nautical Surveyor, Chittagong, or Subdivisional Officer, Goalundo, before submission at the Port Office, Calcutta or Chittagong, or at the Subdivisional Office, Goalundo.

The form Exn. 1, properly filled in, together with the candidate's testimonials, must be lodged with the Principal Officer, Mercantile Marine Department, Calcutta district, Calcutta, or Nautical Surveyor, Chittagong, or Subdivisional Officer, Goalundo, not later than three days before the day of examination.

4. **Testimonials required.**—Applicants will be required to produce, in addition to the usual forms of discharge, satisfactory testimonials as to sobriety, experience, ability, and general good conduct for at least the last 12 months' service on boardship preceding the date of application to be examined, unless the Government after having investigated the matter, should see fit to reduce the time.

An applicant already possessed of a certificate and wishing to appear for one of a higher grade must produce his certificate and all the discharges and testimonials he submitted when he applied for examination in the lower grade as well as the discharges and testimonials necessary for the higher grade certificate. Should references of doubtful authenticity be submitted by candidates for examination, the examining officer may require proof from the candidate of their genuineness, or an affidavit made to that effect.

If applicants have served on shore immediately preceding their application, certificates of sobriety must be produced from their employers, or from a respectable householder if unemployed. No candidate will be allowed to be examined unless he has served on boardship six months within the last three years preceding the date of his application to be examined.

5. As such testimonials and discharges may have to be verified before the candidates can be examined, it is desirable that these should be handed over, together with the form Exn. 1, as early as possible.

6. **Testimonials of Foreigners.**—The testimonials of service of Foreigners and of British seamen serving in foreign vessels, which cannot be verified in the Port Office, Calcutta or Chittagong, or Sub-divisional Office, Goalundo, must be confirmed either by the Consul of the country to which the ship in which the candidate served belonged, or by some other recognized official authority of that country, or by the testimony of some credible person on the spot, having personal knowledge of the facts required to be established. The production, however, of such proofs will not of necessity be deemed sufficient. Each case must be decided on its own merits; and if the sufficiency of the proofs given appears to be at all doubtful, the point must be referred to the Government.

7. **Certificate as to age.**—Should any doubt exist as to the age of a candidate, he will be required to produce a certificate of birth or baptism.

8. **Foreigners to know English.**—Foreigners must prove to the satisfaction of the examiners that they can speak and write the English language sufficiently well to perform the duties required of them on board a British vessel.

9. Testimonials of service must ordinarily be based on their employers' office records.

Services claimed which cannot be "verified from the employers" office records must be authenticated by affidavits of men under whom such services have been performed as well as by an affidavit of the candidate himself.

Testimonials of service from European engineers will be accepted.

10. Candidates will be required to account for any gaps in their services with documentary evidence.

Qualifications for Certificates of Competency as Second-class Engine-drivers of Inland Steam-vessels.

11. A candidate for a certificate of competency as second-class engine-driver of an inland steam-vessel must have attained the age of twenty-one year and must possess *one* of the following qualifications, namely:—

(*a*) He must have served an apprenticeship of at least four years if in India, or three years if in the United Kingdom, in the making or repairing of steam-engines, and one year in the engine-room of a steamer; or

(*b*) He must have served four years in the engine-room of a steamer at sea, or on inland waters under a certificated engineer or first-class engine-driver, one year of which service must have been as a serang or tindal; or

(*c*) He must have served five years in the engine-room of a steamer, one year of which service must have been as serang, tindal or principal fireman in a vessel of not less than 15 nominal horse-power under a first-class engine-driver; or

(*d*) He must have served two years in charge of the engines of a factory or mill under a European manager or engineer, and one year as engine-room serang, tindal or principal fireman in a steamer of not less than 15 nominal horse-power.

12. He must satisfactorily pass a *vivâ voce* examination as to the working of marine engines and boilers and the uses of the different parts and fittings, also as to the use of brine cocks, the salinometer and blowing-off, the care of boilers in salt or foul water, and the art of economical stoking and prevention of smoke.

13. He must be able, if required, to show his practical qualifications by actually working the engines of a small steamer, after fulfilling all the other tests to which he will be subjected.

Qualifications for Certificates of Competency as Second-class Engine-drivers of Inland Motor-vessels.

14. A candidate for a certificate of competency as second-class engine-driver of an inland motor-vessel must have attained the age of 21 years and must possess *one* of the following qulifications, namely:—

(*a*) He must have served for not less than three years as an apprentice or journeyman in the making, fitting and/or repairing of internal combustion or marine steam-engines and in addition he must have served for six months in the engine-room of a motor-vessel having engines of not less than 85 brake horse-power or nine months in a vessel with engines of not less than 40 brake horse-power; or,

(*b*) He must have served for a period of not less than four years in the engine-room of a motor-vessel of not less than 226 brake horse-power, of which period not less than one year must have been served as serang, principal tindal or chief greaser:

Provided that of the four years mentioned above one-third may be served in the engine-room of a steam-vessel of not less than 40 nominal horse-power; or

(*c*) He must have served for a period of not less than five years in the engine-room of a motor-vessel having engines of not less than 85 brake horse-power, or six years in the engine-room of a vessel having engines of not less than 40 brake horse-power, of which period not less than one year must have been as serang, tindal or chief greaser:

Provided that of the five and six years' service mentioned above, one-third may be served in the engine-room of a steam-vessel of not less than 10 nominal horse-power; or

(*d*) He must have served for a period of not less than two years in charge of the engines of a factory or mill under a certificated engineer, as well as for a period of not less than one year in the engine-room of a motor-vessel of not less than 85 brake horse-power, or eighteen months in a motor-vessel having engines of not less than 40 brake horse-power, as serang, tindal or chief greaser; or

(*e*) He must have served for at least six months with a second-class engine-driver's certificate for steam-vessels or with a certificate of a higher grade in the engine-room of a motor-vessel having engines of not less than 85 brake horse-power or for nine months in a motor-vessel having engines of not less than 40 brake horse-power; or

(*f*) He must have served for at least two years, whilst in possession of a permit, as an engine-driver of an inland motor-vessel having engines of 40 brake horse-power or under followed by three years' service in the engine-room of a motor-vessel having engines of more than 40 brake horse-power as serang, tindal or chief greaser:

Provided that when the candidate produces proof of long service with a permit in launches having engines of 40 brake horse-power or under, remission of service with engines of over 40 brake horse-power may be allowed in the ratio of one year in lower-powered launches in lieu of six months' service in higher-powered launches with a maximum remission of eighteen months. The service to count for remission must be in excess of the two years required in launches of 40 brake horse-power or under.

15. The candidate must satisfactorily pass a *viva voce* examination on the working of the various types of internal combustion engines and be able to name the principal parts of the machinery.

16. The candidate must know what attention is required by the various parts of the machinery, understand the use and management of the different valves, cocks, pipes and connections, and be familiar with the various methods of supplying air and fuel to the cylinders.

17. The candidate must be able to describe the chief causes which may make the engine difficult to start and to explain how he would proceed to remedy any defects connected therewith; he must also be able to show that he understands the mechanism of the starting and reversing arrangements and that he is competent to deal with defects therein.

18. The candidate must be able to overhaul the engine, to adjust the working parts and to put the engine together again in good working condition. He must also understand how to make good the result of ordinary wear and tear to the machinery and how to correct defects from accidents.

19. The candidate must be familiar with the nature and properties of the various fuel oils used in internal combustion engines. He must understand what is meant by "flash point."

20. The candidate must know the danger resulting from leakage from the fuel oil tanks and must understand the precautions to be taken against explosion. He must also be able to take the necessary precautions to guard against the escape of inflammable vapour from the vaporizer when the engines are stopped. He must know how to deal with fire should it break out.

21. The candidate must also be able, if required, to show his practical knowledge by actually working the engines of a motor-vessel in the presence of the examiner.

22. The candidate must possess a working knowledge of the auxiliary steam-boilers and machinery connected therewith, namely, electric light engines, steering engines, evaporators and pumps.

Qualifications for Certificates of Competency as First-class Engine-drivers of Inland Steam-vessels.

23. A candidate for a certificate of competency as first-class engine-driver of an inland steam-vessel must have attained the age of twenty-two years and must possess *one* of the following qualifications, namely:—

(*a*) He must have served an apprenticeship of at least four years if in India, or three years if in the United Kingdom, in the making or repairing of steam-engines and one year as Assistant Engineer in a steamer having engines of not less than 80 nominal horse-power whilst holding a second-class engine-driver's certificate for steam-vessels; or

(*b*) He must have served five years in the engine-room of a steamer at sea or on inland waters, two years of which service must have been as a serang or principal tindal of a steamer having compound surface condensing engines of not less than 30 nominal horse-power whilst holding a second-class engine-driver's certificate for steam-vessels; or

(*c*) He must have served one year as second driver with a second-class engine-driver's certificate for steam-vessels in charge of a watch on the main engines and boilers of a steamer having compound surface condensing engines of not less than 30 nominal horse-power; or

(*d*) He must have served one year with a second-class engine-driver's certificate for steam-vessels as driver in charge of the engines of a steamer having compound surface condensing engines of not less than 20 nominal horse-power; or

(*e*) He must have served eighteen months as serang or principal tindal with a second-class engine-driver's certificate for steam-vessels in charge of a watch on the main engines and boilers of a steamer having compound surface condensing engines of not less than 30 nominal horse-power; or

(*f*) He must have served three years in charge of the engines of a factory or mill under a European manager or engineer, as well as two years as assistant engineer, engine-room serang or principal tindal, of a steamer having engines of not less than 80 nominal horse-power whilst holding a second-class engine-driver's certificate for steam-vessels.

24. He must pass a *viva voce* examination similar to that required by rule 12 for a second-class engine-driver's certificate for steam-vessels but more advanced.

25. He must also be able, if required, to show his practical qualifications by actually working the engines of a steamer after fulfilling all the other tests to which he will be subjected.

Qualifications for Certificates of Competency as First-class Engine-driver of Inland Motor-vessels.

26. A candidate for a certificate of competency as first-class engine-driver of an inland motor-vessel must have attained the age of 22 years and must possess *one* of the following qualifications, namely:—

(*a*) He must have served for not less than one year as engine-driver on regular watch on the main engines of a motor-vessel of not less than 565 brake horse-power whilst holding a second-class engine-driver's certificate for motor-vessels; or

(*b*) He must have served for a preiod of not less than 18 months as second driver with a second-class engine-driver's certificate for motor-vessels in charge of a watch on the main engines of a motor-vessel of not less than 226 brake horse-power; or

(*c*) He must have served for a period of not less than four years in the engine-room of a motor-vessel of not less than 226 brake horse-power, of which period not less than one year must have been served as a chief greaser, serang or principal tindal whilst holding a second-class engine-driver's certificate for motor-vessels.

If the motor-vessel is of not less than 170 brake horse-power, he must have served at sea or on inland waters for a period of not less than five years in such vessel, of which period not less than two years must have been served as a serang, principal oilman or chief greaser whilst holding a second-class engine-driver's certificate for motor-vessels; or

(*d*) He must have served for a period of not less than 18 months with a second-class engine-driver's certificate for motor-vessels as driver in charge of the engine of a motor-vessel of not less than 113 brake horse-power; or

(*e*) He must have served for not less than two years as a serang, principal tindal or chief greaser with a second-class engine-driver's certificate for motor-vessels in a motor-vessel of not less than 226 brake horse-power; or

(*f*) He must have served for not less than three years in charge of the engines of a factory or mill under a certificated engineer as well as for not less than one year in the engine-room of a motor-vessel of not less than 226 brake horse-power as assistant engineer, serang, principal tindal or chief greaser whilst holding a second-class engine-driver's certificate for motor-vessels; or

(*g*) He must have served for not less than two years as engine-driver on regular watch on the main engines of a motor-vessel of not less than 226 brake horse-power whilst holding a first-class engine-driver's certificate granted under the Inland Steam-vessels Act, 1917; or

(*h*) He must have served for not less than four years as engine-driver on regular watch on the main engines of a motor-vessel of not less than 226 brake horse-power whilst holding a second-class engine-driver's certificate granted under the Inland Steam-vessels Act, 1917; or

(*i*) He must hold an engine-driver's certificate for sea-going steamships granted under the Indian Merchant Shipping Act, 1923, and must have served on regular watch on the main engines of a motor-vessel of not less than 226 brake horse-power for a period of not less than one year.

27. He must pass a *viva voce* examination similar to that required by rules 15 to 22 for a second-class engine-driver's certificate but of a more advanced character.

Qualifications for Certificates of Competency as Engineers of Inland Steam-vessels.

28. A candidate for a certificate of competency as an engineer of an inland steam-vessel must be not less than twenty-two years of age and must possess the following qualifications, namely:—

(*a*) He must have served as an apprentice engineer for five years if in India, or four years if in the United Kingdom, and prove that during the period of his apprenticeship he has been employed on the making or repairing of steam-engines, boilers, etc.

Journeyman's time will be considered as equivalent to apprenticeship.

In addition to the apprenticeship described above, the applicant must have served two years thereafter as Assistant Engineer in a steamer having engines of not less than 80 nominal horse-power or with a first-class engine-driver's certificate as driver-in-charge of the engines of a steamer having compound surface condensing engines of not less than 30 nominal horse-power, or

Failing the above service, he must have served four years with a first-class engine-driver's certificate, in charge of the engines of a steamer having compound surface condensing engines of not less than 30 nominal horse-power.

(*b*) He must be able to give a satisfactory description of boilers, and the methods of staying them, together with the use and management of the different valves, cocks, pipes and connections.

(*c*) He must understand how to correct defects from accident, decay, etc., and the means of repairing such defects.

(*d*) He must understand the use of the water-gauge, pressure-gauge barometer, thermometer and salinometer, and the principles on which they are constructed.

(*e*) He must state the causes, effects and usual remedies for incrustation and corrosion.

(*f*) He must be able to explain the method of testing and altering the setting of the slide valves, and method of testing the fairness of shafts and adjusting them.

(*g*) He must be able to calculate the suitable working pressure for a steam-boiler of given dimensions, and the stress, per square inch, on crank and tunnel shafts when the necessary data are furnished.

(*h*) He must understand the construction of, and be able to maintain in working condition, the auxiliary machinery which may be placed under his charge, viz., electric light engines (steam and oil) and dynamos, electric motors, the various types of steering engines, hydraulic and refrigerating machinery.

(*i*) He must understand the construction of centrifugal bucket, and plunger pumps, and the principle on which they act.

(*j*) He must be able to state how a temporary or permanent repair could be effected in case of derangement of a part of the machinery, or total breakdown.

(*k*) He must write a legible hand, and have a good knowledge of arithmetic up to and including vulgar and decimal fractions and square and cube roots. He must also understand the application of these rules to questions about safety valves, coal consumption, consumption of stores, capacities of tanks, bunkers, etc.

(*l*) He must be able to pass a creditable examination as to the various constructions of paddle and screw engines in general use, as to the details of the different working parts, external and internal, and the use of each part.

(*m*) He must possess a creditable knowledge of the prominent facts relating to combustion, heat, steam and electricity.

(*n*) He will be required to make an intelligible hand sketch, or a working drawing of some one or more of the principal parts of a steam-engine, and to mark in, without a copy, all the necessary dimensions in figures, so that the sketch or drawing could be worked from (Appendix D). Drawing boards and T-squares will be provided, but applicants will have to bring with them any drawing instruments they may require.

(*o*) He must be able to state the general proportions borne by the principal parts of the machinery to each other, and to calculate the direct stress, the torsional stress, and the bending stress in round bars, and the direct stress and the bending stress in rectangular bars with given loads.

(*p*) He must be able to describe different types of marine motor-engines, their working and uses of the several parts.

Qualifications for Certificates of Competency as Engineers of Inland Motor-vessels.

29. A candidate for certificate of competency as engineer of an inland motor-vessel must have attained the age of 22 years.

30. He must possess the following qualifications, namely:—

(*a*) He must have served for not less than four years as an apprentice engineer or journeyman at the making, fitting and repairing of steam or motor-engines such as would be recognised as affording useful training for a marine engineer. No time served before the age of 15 will be accepted. Not less than three years of this period must have been spent at fitting, erecting or repairing internal combustion engines. The remaining year may have been spent either wholly or in part on work of this nature, or at an approved technical school as mentioned in the rules for examination of sea-going engineers.

Service as Journeyman will be considered as equivalent to apprenticeship, but no time served before the age of 15 is reached will be accepted.

Workshop service other than the above may be accepted if it is considered useful training for a motor-engineer, but all such cases must be submitted to the Principal Officer, Mercantile Marine Department, Calcutta/Nautical Surveyor, Chittagong, for consideration before the candidate is examined, and at least an additional three months of qualifying service on marine internal combustion engines either in the works or on regular watch in the main engine-room of vessels propelled by these engines must have been performed in respect of each twelve months of workshop service of this nature, or other than on the making or repairing of internal combustion engines so accepted. If the service is not altogether satisfactory, a longer additional period than that specified may be required.

Any deficiency in the requisite four years' workshop service may be made up by service afloat on regular watch in the main engine-room of a vessel of not less than 565 brake horse-power propelled by internal combustion engines.

If the vessel is a sea-going vessel one and half times the period of deficiency must be served and if an inland-vessel, two and a quarter times the period of deficiency will be required. Thus a candidate who has no workshop service must serve six years in a suitable sea-going vessel; or nine years in an inland-vessel in lieu of his apprenticeship

(*b*) In addition to the workshop service as above described or the alternative service afloat, the candidate must have spent 18 months at sea as engineer on regular watch on the main engines of a sea-going ship propelled by internal combustion engines of not less than 565 brake horse-power or 27 months in a similar inland-vessel.

31. He must write a legible hand and have a good knowledge of arithmetic up to and including vulgar and decimal fractions and square root. He must also be able to work out questions relating to

spring or lever-loaded safety and relief valves, consumption of oil and stores, capacities of tanks, bunkers, etc., speed of vessels, and other similar problems, and be able to calculate suitable working pressures for air receivers of given dimensions, and the stress per square inch on crank and tunnel shafts and other parts of the machinery when the necessary data are furnished.

32. He must be able to give a clear explanation of the principles on which oil, gas or other internal combustion engines work, including the methods of ignition, to point out the differences between them, and to show by means of illustrative sketches and otherwise that he understands the details of the construction of those in general use.

33. He must be familiar with the various methods of supplying air and fuel to the cylinders in the different types of engines, the construction of the apparatus for carburetting, atomising, or gasifying the fuel, and the means for cooling the cylinders, pistons, etc.

34. He must have a satisfactory knowledge of the process employed in the construction of internal combustion engines in the workshop, and of the methods used in fitting the machinery on boardship.

35. He must know what attention is required by the various parts of the machinery and understand the use and management of the different valves, cocks, pipes and connections.

36. He must be able to state and describe the chief causes which may make the engines difficult to start and to explain how he would proceed to remedy any defects arising therefrom. He must also be able to show that he understands the mechanism of the starting and reversing arrangements, and is competent to deal with defects therein.

37. He must understand how to make good the results of ordinary wear and tear to the machinery, how to test the fairness of shafting, etc., how to correct defects from accident, delay, etc., and how a temporary or permanent repair could be effected in case of derangement or total break-down.

38. He must understand the construction of the pressure gauge, barometer, thermometer, and other instruments used in the engine-room and the principles on which they work.

39. He must understand the construction and working of centrifugal bucket, and plunger pumps, and the principles on which they act.

40. He must understand the construction and working of air compressors, gas producers, steering engines, electric light engines and dynamos, electric motors, refrigerating, hydraulic and other auxiliary machinery found on boardship.

41. He must possess a good working knowledge of the construction and management of auxiliary steam boilers and machinery and be familiar with the prominent facts relating to combustion, heat and steam.

42. He must be familiar with the nature and properties of the various oils, etc., generally used in internal combustion engines, must understand what is meant by "flash point;" and have a knowledge of the explosive properties of gas or the vapour given off by these oils, etc., when mixed with definite quantities of air and be thoroughly conversant with the danger of exposing such gas or vapour to a naked light; or of allowing any leakage from the oil tanks particularly into the vessels, bilges, and unventilated spaces, or from gas producers, pipes, vapourizers, etc.

43. He must thoroughly understand the precautions to be taken against fire or explosion from oil or gas, and know how to deal with fire should it break out. He should also be familiar with the action of wire gauze diaphragms when placed in pipes and connections to oil tanks, etc., for the purpose of preventing the explosion or ignition of oil vapour therein.

44. He must be able to explain the principle construction and arrangement of primary and secondary batteries and induction coils so far as is necessary for the efficient management of an oil engine.

45. He must be able to take off and calculate indicator diagrams and understand the action of the gas in the cylinder as shown thereby.

46. He must be able to make a dimensioned working sketch drawing of some simple part of the machinery.

47. An engineer in possession of a (steam) certificate of competency as a first or second-class engineer is also eligible for a certificate as an engineer of inland motor-vessels under the following rules:—

(*a*) He must have served for not less than six months as an assistant engineer on regular watch on the main engines of a sea-going ship propelled by internal combustion engines of not less than 565 brake horse-power or nine months in a similar inland-vessel whilst holding a

first-class certificate of competency for sea-going steamships granted or recognised as valid under the Merchant Shipping Act, 1894. He must also satisfy the examiners that he is fully conversant with internal combustion engines and be able to show both in writing and in *viva voce* examination that he has satisfactory knowledge of the subjects covered by rules 32 to 37 and 42 to 45 of these rules; or

(*b*) He must have served for not less than 12 months as an assistant engineer on regular watch on the main engines of a sea-going ship propelled by internal combustion engines of not less than 565 brake horse-power or 18 months in a similar inland vessel whilst holding a second class certificate of competency for sea-going steamships, granted or recognised as valid under the Merchant Shipping Act, 1894. He must also satisfy the examiners that he is fully conversant with internal combustion engines and be able to show both in writing and in *viva voce* examination that he has satisfactory knowledge of the subjects covered by rules 32 to 37 and 42 to 45 of these rules.

48. Engineers in possession of ordinary certificates of competency as engineers granted under the Inland Steam-vessels Act, 1917, may be examined for motor endorsement of their certificates: provided that they have served for not less than 12 months as assistant engineer on regular watch on the main engines of a sea-going ship propelled by internal combustion engines of not less than 565 brake horse-power or 18 months on a similar inland-vessel whilst holding a certificate as engineer.

General Rules as to Examinations.

ENGINEERS.

49. **Candidate not to take books, etc., into examination room.**—All books necessary for the use of candidates under examination will be provided, and applicants will not be permitted to take into the examination room any book, paper, document, or memoranda of any description whatever; and, subject to the provisions referred to hereafter, they will also not be allowed to work out their problems on a slate or on waste paper.

50. Candidates will be allowed in the time allotted to cancel any part of their work, and, when required, additional papers will be supplied by the examiners. These additional sheets must be attached to, and form part of, the examination papers.

51. **Punishment for breaking rules.**—In the event of any candidate being discovered copying from another, or affording any assistance or giving any information to another, or communicating in any way with another during the time of examination, he will be regarded as having failed in his examination, and will be turned back for three months, in the same manner as if he had failed in the practical part of the examination; and no part of the fees he may have paid for examination will be returned to him.

52. **Leaving examination room.**—If a candidate leaves the room before answering any question which has been given to him, he cannot afterwards be permitted to answer it, but the examiners may substitute other data or another question.

53. (*a*) **Questions and answers.**—The examination of candidates for certificates of competency as engineers consists of four parts: Arithmetic, Drawing, Elementary questions and *viva voce*. When the number of marks obtained in arithmetic amounts to 28, that is, two-thirds of the maximum, the candidate passes in arithmetic.

(*b*) All applicants presenting themselves for examination for certificates of competency as engineers will be required to give written answers to ten questions selected from the list of elementary questions shown in Appendix B. These questions are intended to furnish a record to some extent of the candidate's knowledge at the time of his examination, and also to induce the candidates to pay more attention to their handwriting and spelling.

54. The form, Appendix A, on which these answers will be written, contains also some questions as to the experience of the applicant, to be answered by him in writing.

55. Examiners may add to their *viva voce* questions on the practical management of steam-engines and boilers any of those contained in Appendix B.

56. If at the expiration of the time allowed the candidate has worked out correctly the whole of the questions set to him, and given satisfactory answers in the *viva voce* examination, he will be declared to have passed.

57. If at the expiration of the time allowed he has not worked out the whole of the questions set to him, but if the result of the *viva voce* examination, taken in connection with the answers to such of the questions as he has worked out, is sufficient to satisfy the examiners that the applicant is competent to take charge of engines, he will be declared to have passed.

58. In other cases he will be declared to have failed.

59. A report of the examination, and the examination papers will be forwarded to the Government on the prescribed form.

60. **Notification of having passed will be given to successful candidates.**—If the candidate passes, he will receive a formal note to that effect upon which the Government will issue the certificate to the candidate, whose testimonials, etc., will be returned at the same time.

FEES.

61. **Fees to be paid by applicants for examination.**—Candidates for examination, in making their application on form Exn. 1, will be required to pay the examination fees before any step is taken, whether by inquiring into their services or testing their qualifications, etc. No part of the fee will under any circumstances be returned to them; but should it be found that their services is not sufficient to entitle them to be examined, or that their testimonials are unsatisfactory, they will be allowed to present themselves for examination without paying any further fee, when they have fulfilled the requisite service, or are able to produce satisfactory testimonials, as the case may be.

62. The fee for examination must be paid to the Principal Officer, Mercantile Marine Department, Calcutta, or Nautical Surveyor, Chittagong, or Subdivisional Officer, Goalundo. In any case in which a candidate offers money to any other officer, and in any place but in the Port Office, Calcutta or Chittagong, or Subdivisional Office, Goalundo, the candidate so offering money will be regarded as having committed an act of misconduct, and will be rejected and not allowed to be examined for 12 months.

63. If a candidate fails in his examinations, *no part of the fee he has paid will be returned to him.*

64. The fees are as follows:—

	Rs.
Second-class engine-drivers	4
First-class ditto	10
Engineers	12

FAILURE.

65. If the applicant fails in the *viva voce* or practical part of the examination, he may not present himself for re-examination until he can produce proofs of three months' further service afloat. If he fails in arithmetic or drawing only, he may come up again at any time. Engine-drivers may be examined *de novo* after six months' active service as serang or principal tindal or second driver if the past examination showed that they might reasonably be expected to qualify.

GENERAL.

66. Certificates of competency as engineers and first and second-class engine-drivers shall be made out and issued in the forms hereunto annexed.

67. Every certificate of competency shall be made in duplicate, and one copy shall be delivered to the person entitled to the certificate and the other shall be kept and recovered by the Principal Officer, Mercantile Marine Department, Calcutta, or Nautical Surveyor, Chittagong, or the Subdivisional Officer, Goalundo.

Government of
Bengal.

By His Excellency the Governor of Bengal in Council.

Certificate of Competency as Second-class Engine-driver of an Inland Steam-vessel under Act I of 1917.

To

Whereas it has been reported to His Excellency the Governor in Council that you have been found, after examination, duly qualified to fulfil the duties of Second-class Engine-driver of an inland steam-vessel having engines of less than 30/40 nominal horse-power, measured in accordance with the rules in force before/after 24th August 1920, I do hereby, in pursuance of Act I of 1917, as amended by Act VI of 1920, grant you this Certificate of Competency as such Second-class Engine-driver.

By order of the Government of Bengal,

Given under my hand and seal.

Dy. Secy. to the Govt. of Bengal.

This——————*day of*——————*19* .

No. of Certificate——————

Bearer——————, son of——————, by caste——

Date* and place of birth, showing village, thana and district

---

Residence, showing village, thana and district——————

Height——————

Personal description, stating particularly any permanent marks or scars——————

No. of Register Ticket——————

Signature——————

Any second-class Engine-driver who fails to deliver up a certificate which has been cancelled or suspended is liable to a penalty not exceeding Rs. 500.

N. B.—Any person other than the owner thereof becoming possessed of this certificate is required to transmit it forthwith to the Principal Officer, Mercantile Marine Department, Calcutta District, Calcutta/ Nautical Surveyor, Chittagong.

Issued at Calcutta/Chittagong, on the——day of——19

Registered.

CAPT., R.I.M.,

Principal Officer, Mercantile Marine Department, Calcutta District, Calcutta/Nautical Surveyor, Chittagong.

---

*If not known exactly, must be added on the best information or evidence available.

Government of Bengal.

By His Excellency the Governor of Bengal in Council.

Certificate of Competency as First-class Engine-driver of an Inland Steam-vessel under Act I of 1917.

To

Whereas it has been reported to His Excellency the Governor in Council that you have been found duly qualified to fulfil the duties of First-class Engine-driver of an inland steam-vessel having engines of 30/40 nominal horse-power or upwards but of less than 80/100 nominal horse-power, measured in accordance with the rules in force before/after 24th August 1920, I do hereby, in pursuance of Act I of 1917, as amended by Act VI of 1920, grant you this Certificate of Competency as such First-class Engine-driver.

By order of the Government of Bengal,

Given under my hand and seal.

Dy. Secy. to the Govt. of Bengal.

This———day of———19 .

No. of Certificate———

Bearer———, son of———, by caste———

Date* and place of birth, showing village, thana and district

---

Residence, showing village, thana and district———

Height———

Personal description, stating particularly any permanent marks or scars———

No. of Register Ticket———

Signature———

Any First-class Engine-driver who fails to deliver up a certificate which has been cancelled or suspended is liable to a penalty not exceeding Rs. 500.

N. B.—Any person other than the owner thereof becoming possessed of this certificate is required to transmit it forthwith to the Principal Officer, Mercantile Marine Department, Calcutta District, Calcutta/ Nautical Surveyor, Chittagong.

Issued at Calcutta/Chitagong, on the——— day of———19 .

Registered.

CAPT., R.I.M.,

Principal Officer, Mercantile Marine Department, Calcutta District, Calcutta/Nautical Surveyor, Chittagong.

---

*If not known exactly, must be stated on the best information or evidence available.

Government of Bengal.

By His Excellency the Governor of Bengal in Council.

Certificate of Competency as Second-class Engine-driver of an Inland Motor-vessel under Act I of 1917.

To

Whereas it has been reported to His Excellency the Governor in Council that you have been found after examination duly qualified to fulfil the duties of Second-class Engine-driver of an inland motor-vessel having engines of less than 226 brake horse-power, I do hereby, in pursuance of Act I of 1917, grant you this Certificate of Competency as such Second-class Engine-driver.

By order of the Government of Bengal,

Given under my hand and seal.

Dy. Secy. to the Govt. of Bengal.

This——————*day of*——————*19* .

No. of Certificate——————

Bearer——————, son of——————, by caste——————

Date* and place of birth (showing village, thana and district)——————

Residence (showing village, thana and district)——————

Personal description, stating particularly any permanent marks or scars——————

Height——————

No. of Register Ticket——————

Signature——————

N. B.—Any Second-class engine-driver who fails to deliver up a Certificate which has been cancelled or suspended is liable to a penalty not exceeding Rs. 500.

Any person other than the owner thereof becoming possessed of this Certificate is required to transmit it forthwith to the Principal Officer, Mercantile Marine Department, Calcutta, District, Calcutta/Nautical Surveyor, Chittagong.

Issued at Calcutta/Chittagong on the day of 19

Registered.

CAPTAIN, R.I.M.,

Principal Officer, Mercantile Marine Department, Calcutta District, Calcutta/Nautical Surveyor, Chittagong.

*If not known exactly must be stated on the best information or evidence available.

Government of Bengal.

By His Excellency the Governor of Bengal in Council.

Certificate of Competency as First-class Engine-driver of an Inland Motor-vessel under Act I of 1917.

To

Whereas it has been reported to His Excellency the Governor in Council that you have been found after examination duly qualified to fulfil the duties of First-class Engine-driver of an inland motor-vessel having engines of 226 brake horse-power or more but of less than 565 brake horse-power, I do hereby, in pursuance of Act I of 1917, grant you this Certificate of Competency as such First-class Engine-driver.

By order of the Government of Bengal,

Given under my hand and seal

Dy. Secy. to the Govt. of Bengal.

This——————*day of*——————*19* .

No. of Certificate——————

Bearer——————, son of——————, by caste——————

Date* and place of birth (showing village, thana and district) ——————

Residence (showing village, thana and district)——————

Personal description, stating particularly any permanent marks or scars——————

Height——————

No. of Register Ticket——————

Signature——————

N. B.—Any First-class engine-driver who fails to deliver up a Certificate which has been cancelled or suspended is liable to a penalty not exceeding Rs. 500.

Any person other than the owner thereof becoming possessed of this Certificate is required to transmit it forthwith to the Principal Officer, Mercantile Marine Department, Calcutta, District, Calcutta/Nautical Surveyor, Chittagong.

Issued at Calcutta/Chittagong on the day of 19

Registered.

CAPTAIN, R.I.M.,

Principal Officer, Mercantile Marine Department, Calcutta District, Calcutta/Nautical Surveyor, Chittagong.

*If not known exactly must be stated on the best information or evidence available.

Government of Bengal.

By His Excellency the Governor of Bengal in Council.

Certificate of Competency as Engineer of an Inland Steam-vessel under Act I of 1917.

To

Whereas it has been reported to His Excellency the Governor in Council that you have been found duly qualified to fulfil the duties of Engineer of an inland steam-vessel, I do hereby, in pursuance of Act I of 1917, grant you this Certificate of Competency.

By order of the Government of Bengal,

Given under my hand and seal.

Dy. Secy. to the Govt. of Bengal.

This———day of———19 .

No. of Certificate———

Bearer———

Date and place of birth———

Height———

Personal description, stating particularly any permanent marks or scars———

No. of Register Ticket———

Signature———

Any engineer who fails to deliver up a Certificate which has been cancelled or suspended is liable to a penalty not exceeding Rs. 500.

N. B.—Any person other than the owner thereof becoming possessed of this certificate is required to transmit it forthwith to the Principal Officer, Mercantile Marine Department, Calcutta District, Calcutta/ Nautical Surveyor, Chittagong.

Issued at Calcutta/Chittagong on the day of 19

Registered.

CAPTAIN, R.I.M.,

Principal Officer, Mercantile Marine Department, Calcutta District, Calcutta/Nautical Surveyor, Chittagong.

Government of Bengal.

By His Excellency the Governor of Bengal in Council.

Certificate of Competency as Engineer of an Inland Motor-vessel under Act I of 1917.

To

Whereas it has been reported to His Excellency the Governor in Council that you have been found duly qualified to fulfil the duties of Engineer of an inland motor-vessel, I do hereby, in pursuance of Act I of 1917, grant you this Certificate of Competency.

By order of the Government of Bengal,

Given under my hand and seal.

Dy. Secy. to the Govt. of Bengal.

This——————*day of*——————*19* .

No. of Certificate——————

Bearer——————

Date and place of birth——————————

Height——————————————

Personal description, stating particularly any permanent marks or scars——————————————

No. of Register Ticket——————————————

Signature——————————————

Any engineer who fails to deliver up a Certificate which has been cancelled or suspended is liable to a penalty not exceeding Rs. 500.

N. B.—Any person other than the owner thereof becoming possessed of this certificate is required to transmit it forthwith to the Principal Officer, Mercantile Marine Department, Calcutta District, Calcutta/ Nautical Surveyor, Chittagong.

Issued at Calcutta/Chittagong on the day of 19

Registered.

CAPTAIN, R.I.M.,

Principal Officer, Mercantile Marine Department, Calcutta District, Calcutta/Nautical Surveyor, Chittagong.

Appendix A.

(See rule 54.)

TO ENGINEER EXAMINERS.

Examiners will require all candidates to fill up the particulars noted below, and will forward the same to the Government along with the report of the examination.

The arithmetical questions for engineers and the *viva voce* examinations for all candidates will be continued as heretofore, and failure in the elementary questions will be treated as failure in arithmetic.

The numbers of the questions for each examination will be selected by the examiners, and they are not to be communicated to the candidate until his examination commences.

Port	Class for which examined
Date	Candidate's name

A. Where and how long did you serve in works at the making or at the repairing of engines, and in what capacities?

B. How long have you served in the engine-room at sea, or on inland waters and in what capacities?

C. With what descriptions of engines have you served at sea, or on inland waters—paddle, or screw, or both? What size were the engines?

D. With what description of boilers have you served at sea, or on inland waters—cylindrical, multitubular, water tube, sectional or flue boilers?

E. What engine defects have come under your notice at sea, or on inland waters, what caused these defects, and how were they remedied? Give the names of the steamers for verification.

F. What boiler defects have come under your notice, what caused these defects, and how were they remedied? Give the names of the steamers for verification.

For the questions to be answered on the following pages, *see* the list of Elementary Questions in Appendix B. The questions need not be written: only the answers to them.

Question No.
Question No.
Question No.
Question No.
Question No.
Question No.
Question No.
Question No.
Question No.
Question No.

Appendix B.

(See rule 53.)

ELEMENTARY QUESTIONS.

For the examination of Engineers for Certificates of Competency.

1. What parts of an engine are generally made of wrought iron?
2. What parts of an engine are generally made of cast iron?
3. For what parts of an engine is steel sometimes used?
4. What parts of an engine are generally made of brass or gun-metal?
5. Where is "white metal" sometimes used? On account of what property possessed by it is it adopted? What objection is there to its more general use?
6. For what parts is Muntz metal sometimes used? Is it malleable? For what properties is it valued?
7. What difference is there in the composition of cast iron, of wrought iron and of steel?

8. How can cast iron, wrought iron, and steel be distinguished from each other?

9. What are the different properties of cast iron, of wrought iron and of steel?

10. What is meant by the terms "breaking stress," "proof stress," "safe working stress"?

11. What is the cohesive strength, or breaking stress, of good ordinary wrought iron?

12. Tempering steel; how is it done, and in what order do the colours come?

13. What is case-hardening?

14. Which of the common metals or alloys can be forged and which of them are brittle or "short"?

15. What is meant by "welding"? Which of the common metals can be welded?

16. The expansion of metals by heat; give examples of this in the engine and in the boiler.

17. In the construction of steel cylindrical marine boilers for what parts have the plates to be worked hot? What precautionary treatment of these plates is afterwards necessary?

18. In what parts of cylindrical marine boilers is the strongest rivetting employed? In which of the shell seams is it most necessary?

19. What is "caulking," and how are seams prepared for caulking?

20. Describe the different ways of fastening the ends of the main stays of a boiler. What are the merits of, or objections to, the different plans?

21. What stress per square inch is allowed on boiler stays?

22. Describe a rivetted stay, and state where such stays are commonly used.

23. Where are thin plates to be looked for in a boiler as it wears, and how is the thinness to be detected?

24. How are boiler tubes fixed? What are "stay tubes," and how are they secured?

25. Where is it generally that boiler tubes leak? How is this defect repaired? What are the causes of this leaking?

26. What are the causes of cracked tube plates? Where are the cracks situated? How are they repaired?

27. What is the difference between a "dry uptake" and a "wet uptake"? Which requires more repair? Why? Where have you seen a wet uptake?

28. What is a superheater? What is its construction? What valves are on it? There is sometimes a gauge glass on it. What is that for? Are superheaters now in general use?

29. What parts of marine multitubular boiler are first injured by shortness of water?

30. Where are angle irons sometimes used in the construction of a boiler, and where are flanged plates used?

31. Priming; to what causes is it attributed? What means are applied to prevent it? What evils may be produced by it?

32. Funnel draught; what makes it? What checks it?

33. Flame is sometimes seen at the top of the funnel; what causes this appearance? Is it beneficial or is it detrimental? Why so?

34. A blast pipe; what is its construction? Where is it placed? For what is it used?

35. How many bottom blow-off cocks are generally fitted to each boiler, and why are they so fitted?

36. Blow-off cocks are sometimes fitted with a spanner guard; for what purpose is this? Describe how the guard is formed.

37. Water-gauge test-cocks; where are they placed? At what heights? Must the cocks themselves be at those heights? What provision is made for cleaning these cocks should they ever become choked? When there are no test-cocks, how is the height of the water ascertained?

38. What is a dead-weight safety valve? Of what are the rubbing surfaces formed? How is a lock-up valve arranged to admit of lifting it or of turning it round, and to prevent adding to the weight?

39. About what area of safety valve is now required by the Board of Trade? What is the effect of suddenly opening a safety valve when steam is up? To about what extent do safety valves rise when blowing-off without being eased by hand?

40. Spring-loaded safety valves; what advantages have they that are not possessed by dead-weight valves? What are the disadvantages, if any, as compared with dead-weight valves?

41. Of what pieces does a glass water gauge mounting consist? How does it act? Where is it placed? At what height? It is liable to derangement? How is its working tested?

42. Glass water gauges have sometimes pipe connections top and bottom; what is the object of this arrangement? Should there be cocks at the extremities of these pipes? Why? Or why not?

43. Describe a Bourdon steam gauge. Some gauges have an inverted syphon pipe below them; what is its use?

44. Why is a small cock sometimes put on the pipe leading to a steam gauge? Where should it be placed, and what error might be made by omitting to use it?

45. Do steam gauges indicate the total pressure of the steam or only a portion of that pressure? What is the pressure measured from?

46. What is meant by the salting of the boiler? How is this prevented? What is the density of ordinary sea water? How is the density ascertained? What is the difference between the formation of scale and the salting of the boiler? What is the maximum density at which boilers should be worked at sea? In the event of condenser tubes leaking, what is the minimum density at which boilers should be worked? Give your reasons.

47. Scum cocks and pipes; how are they arranged? Where are they placed? At what height in the boiler? When are they used? When must they be shut? Neglect of these cocks leads to what dangers?

48. Of what does scale consist? Where is it most objectionable? How is it removed? How is its formation prevented? What evil effects are produced by it?

49. What is a salinometer? Of what does it consist? How does it act? How it is graduated? Can it be used at any temperature indiscriminately?

50. What harm may be done through the check valve of one of a set of boilers being defective while under way? How would you work to avoid this harm?

51. How is the leak from a split tube stopped in a boiler under way? Describe the operation.

52. What is the use of dampers? Where are they fitted? When should they be used?

53. When there are no dampers fitted, what is used instead? What evil to the boiler is sometimes attributed to this? When the heating surfaces are clean does this occur?

54. Describe the piston of a steam cylinder; with its different rings and their uses. There are generally round pieces let in flush on one side of a piston; what are they? How are these pieces fixed?

55. Cylinder drain cocks; what is their use? There is sometimes a valve upon each cock; what purpose does it serve?

56. Cylinder escape valves; of what do they consist? How protected? How regulated? When are they most needed? To what danger do they expose the engineer? What precaution is sometimes used to obviate this danger?

57. What is a compound engine? What different kinds are there for screw steamers, in respect to the number and arrangement of their cranks and cylinders? What is a triple expansion engine?

58. What is link motion? What are some of its advantages? In modern engines for the screw propeller when there is no link motion, what takes its place?

59. What is a separate expansion valve? Why is it not fitted to all engines? What effect has an expansion valve upon the starting and upon the reversing of the engine?

60. What arrangement is applied to reduce the friction of a slide valve? To what is the friction due?

61. Describe a loose eccentric; how does it act? In what engines are the loose eccentries still employed?

62. What is the travel of the eccentric rod? How it is measured on the eccentric? What is the travel of the slide valve when the link motion is in mid gear, and the engine still moving?

63. What are "double beat valves"? What objections are there to their use?

64. What is a circulating pump? Is it always worked by the main engine? Give an example from your last steamer of the three water temperatures generally noted by careful engineers.

65. An air valve is sometimes fitted to a circulating reciprocating pump; what purpose does it serve?

66. What is the difference between a bucket air-pump, a piston air-pump, and a plunger air-pump?

67. Are double-acting air-pumps made with plungers, with pistons, or with buckets? Describe the construction and action of circulating-pumps.

68. What is an air-pump trunk? When is it necessary? How is it attached to the bucket? Centrifugal pumps; describe their construction and mode of working.

69. What class of air-pump requires both foot and delivery valves, and in what other class can either of these valves be in some cases dispensed with?

70. What are marine governors? What is their general construction? How do they act?

71. With a surface condenser and a single acting air-pump what is the effect of a leaky foot valve, and what is the effect of a leaky bucket when there is also a foot valve?

72. Where is the air-pump pet cock or valve placed? How does it act? What is its object? Does it in every case reduce the effective capacity of the pump? Is it equally applicable to double acting pumps?

73. At what temperature is the hot well worked? What is the effect of higher temperatures? What is the effect of lower temperatures? What limits the lowness of temperature? Has a very low temperature any disadvantages?

74. Bilge injection with jet condensers; what are the fittings required? When is it used? What precautions are necessary in using it?

75. When surface condensers are used, what takes the place of the bilge injection? To what is the connection made? How is its valve formed? Why is this necessary?

76. What are the practical guides to the proper amount of opening of the inlet valve for the circulating pump?

77. Feed-pump pet cock or valve; where is it placed? What is its use? How does it act? Is it always a necessary fitting?

78. What are some of the ways of fastening the ends of surface condenser tubes? About what size and about what thickness are condenser tubes? What parts of a surface condenser are made of brass?

79. What is a blow-through valve or cock? To what is it attached? There is sometimes a valve which, when opened, admits steam from the slide valve casing to the exhaust port; what is its use? To which cylinder is it fitted?

80. What are snifting valves? Why are they generally omitted now?

81. What connections are generally fitted to the donkey pump, and to what services can it be applied?

82. When the engines are stopped in harbour with steam up, what are to be shut and what are to be opened?

83. How is an engine heated up before starting? What precautionary examinations are made before starting?

84. What is an intercepter or catch-water? Where is it fixed, what is its construction, how does it act, and what attention does it require?

85. Describe an air-pump bucket with its valve or valves and its packing. Of what are the valves generally made?

86. Of what materials are air-pump rods made? Why?

87. What is the racing of the engine? When does it occur? What danger attaches to it? What is done to prevent it?

88. When under way, when the air-pump bucket is at the top of its stroke, at what height is the water in the condenser?

89. What is meant by the "pitch" of a screw propeller? How is it measured?

90. Explain the difference between a "right hand" and a "left hand" propeller, and state how each of them revolves.

91. What is the slip of a screw propeller? How is its amount expressed in figures?

92. Which of the valves about engines and boilers have to be worked by hand, which of them are self-acting, and which are worked by the motion of the engine?

93. Why is soda sometimes put into a boiler, and how is it put in when under way? What is the kind of soda used?

94. Tallow cups for cylinders were sometimes made with two small cocks, or with only one small cock, or with one large hollow plug cock or with one small cock and a valve; which of these is suitable for a high-pressure cylinder, and which for the cylinder of a condensing engine? Describe how the cup with only one small cock is used. What is now generally used instead of these? How has this change come about?

95. Does a cylinder escape valve, self-acting allow all the water to escape? If not, how much is left in the cylinder?

96. What is a "Steam Lubricator" (sometimes called an Impermeator)? Explain its action. To what part of the engine is it connected? Will throwing cold water over it make it work faster or slower? Describe the one used in your last steamer.

97. A common paddle wheel; of what is the centre made? Of what are the arms formed? What is the form of the bolts which attach the floats to the arms? How are the arms attached to the centres?

98. Why have some paddle wheels one or more cast-iron floats in each wheel? With what engines are these most required? At what part of the circumference are they placed?

99. Why are paddle wheel floats sometimes made of different breadths in the same wheel? With what description of engine is this most needed? Where are the broad floats placed and where are the narrow floats placed in the circumference of the wheel?

100. What difference is there between a radial paddle wheel and one with feathering floats? What is the object of feathering floats? Are all the eccentric rods attached in the same way, and are they all of the same form?

101. Whereabout is the centre of the eccentric of a paddle wheel with feathering floats placed? In that case are the feathering levers on the striking face or on the back of the float? When the paddle shaft has an outer bearing, how is the eccentric made?

102. Of what materials are the working surfaces of a paddle wheel with feathering floats? How are they lubricated?

103. What is a "Disconnecting Paddle Engine"? At what place is the disconnecting effected? How is it accomplished? In which of the cranks of a disconnecting engine are the crank pins fixed?

104. Is link motion valve gear or the loose eccentric generally used for disconnecting paddle engines? For what steamers are disconnecting paddle engines frequently employed?

105. What are expansion joints? Where are they necessary? What attention do they require? Of what should the working surfaces be made?

106. What omission in the construction of expansion joints may lead to a serious accident when steam is first applied? How is this prevented in the construction of a steam trunnion pipe for an oscillating engine?

107. Describe an oil cup with a syphon worsted. How is the worsted arranged? How is it cleaned? How far down the tube does it extend?

108. Describe a thrust bearing; which of the surfaces wears? Why is there sometimes a number of oil tubes or one thrust bearing?

109. What parts of a screw shaft are generally covered with brass? Why is this necessary? About what thickness is the brass?

110. What is the stern tube or screw shaft pipe? Why is a pipe of such a length required? Of what is it made? How is it fixed at each end?

111. What is a *lignum vitæ* bearing? How is the wood fitted? Where is such a bearing generally used?

112. How is a screw propeller fixed on the shaft? What means are used to prevent its getting loose at sea?

113. Where are sluice valves placed? What large sluice valve is there in almost all screw steamers? From what position should this valve be worked? Why so? What attention should it receive?

114. With a condensing engine what valves or cocks are on the skin of the ship in the engine-room and in the stokehold?

115. What are the necessary fittings of a marine boiler?

116. With a surface condensing engine what cocks or valves are opened some time before the engine is started so as to be ready for starting whenever the order is given?

117. What is a steam jacket? What cocks are on it? In what engines are jackets most generally used? Do they require to be felted?

118. What parts of an engine or its fittings should be felted or otherwise protected from radiation?

119. What are the small cylinders sometimes fitted on the slide valve casing cover of vertical engines? Explain their action. To what are they connected by a pipe? Why?

120. Name the principal pipes in connection with the engines and boilers of a steamer, and state to what the ends of these pipes are connected?

121. Through what cocks or valves, pipes and chambers does the water pass on its way from the sea inlet rose plate to the water space of the boiler, with a jet condenser?

122. Through what cocks or valves, pipes and chambers does the circulating water of a surface condenser pass?

123. Through what cocks or valves, pipes and chambers does the steam pass from the boiler until it is in the form of water in the hot well?

124. Name the pieces of the engine through which the pressure of the steam is transmitted from the piston to the screw propeller. Name them in the order in which they act.

125. What is an air vessel? How does it act? At what parts of an engine or its fittings are air vessels generally applied?

126. What is the construction of a mudbox? Where should mudboxes be placed? Why are they necessary? How should the space be divided by the rose plate, and why?

127. What is a trunk engine? Why has it fallen into disuse?

128. What is an oscillating engine? For what steamers are oscillating engines generally adopted? Why? How is the steam conveyed to and from the slide valve casing?

129. Of what parts does the valve motion gear of an oscillating engine consist?

130. For what have geared engines sometimes been used? Of what were the cogs or the large wheel made?

131. At what part of a screw steamer is the pressure that propels it applied to the hull?

132. At what part of a paddle steamer is the pressure that propels it applied to the hull?

133. About how much fuel per indicated horse-power per hour is required by modern steam engines, common, compound, and triple expansion?

134. What is the explanation of the economy of the surface condenser?

135. What is the construction of a surface condenser? Of what are its tubes made? How are they fixed? How are they kept tight? What is done with a split tube?

136. Where do surface condensers foul? How are they cleaned?

137. What non-conducting substances are employed to prevent radiation, and how are they applied?

138. In the construction of smoke-box doors and of dry uptakes, what provision is made to lessen the amount of radiation?

139. How can the formation of excessive smoke be prevented? Describe smoke preventing apparatus.

140. What is meant by "circulation" in a boiler, and what are the results of defective circulation?

141. What means are sometimes adopted to improve the circulation in a boiler?

142. By what arrangement is the circulation promoted in a "hay-stack" boiler?

143. Describe a ship's side air-pump discharge valve. In what respects does it sometimes differ from a common stop-valve, and what attention does it require?

144. What is the construction of a feed escape valve, to what is its discharge connected, and how is its loading regulated? Where should the escaping water flow?

145. When there is no feed escape valve, what is the arrangement of the feed valves or cocks?

146. What is the measure of a horse-power? How is indicated horse-power ascertained?

147. Has "nominal horse-power" a fixed meaning? What is the use of this expression? What is generally taken as the measure of one horse-power nominal?

148. What is "back pressure" in a cylinder? About how much is it in each of the cylinders in your last steamer? Is excessive cushioning ever a trouble under certain conditions in modern engines? Say when and why and in which cylinder this occurs.

149. What is meant by "speed of piston"? About how much is the speed of piston in modern marine engines?

150. What is "atmospheric pressure"? What is its average amount? What instrument tells this amount?

151. What is "gross pressure" or "absolute pressure"? What pressure is it that is shown by the steam gauge?

152. What is meant by "cutting off" steam? How is it done? What part of the valve regulates the cut off?

153. What is a piston slide valve? Describe its construction. Why are they frequently employed in place of the common slide valve? Have they any disadvantages compared with a common slide valve? If so, name them.

154. What fixes the time of closing the exhaust? After the exhaust is closed and before the port opens for steam, what becomes of the steam that is in the cylinder?

155. What is the "lead" of the valve? What is its object? About what amount is it?

156. What is the "cover" or "lap" of the valve? What is its object? About what proportion of the stroke of the valve is it made?

157. What is the "exhaust cover" of a slide valve? What is its effect upon cushioning and upon exhaust?

158. What is "minus cover" or "minus lap" on the exhaust? What is its effect upon the exhaust and upon cushioning?

159. What is "cushioning" or "compression" in a steam cylinder? How is it affected by the amount of cover or of minus cover there may be upon the exhaust? How is it affected by the exhaust pressure?

160. What is "mean effective pressure"? How is its amount ascertained?

161. What is a dial vacuum gauge? What is its construction? For what is it used? About what amount should it show when the engine is working all right? What effect have the variations it indicates on the performance of the engine?

162. Does the vacuum gauge enable you to tell what pressure there is in the condenser, or must you have recourse also to the barometer to arrive at that? How would you ascertain the actual amount of back pressure there is in the condenser?

163. What is a barometer? What is its construction? Is a barometer sometimes used instead of a vacuum gauge? In what respect does the weather barometer differ from the vacuum gauge barometer?

164. The common vacuum gauge and the common steam gauge, in which of them are the graduations marked from atmospheric pressure? Does either of them tell what is the true actual pressure in the boiler or in the condenser?

165. Do steam and vacuum gauges vary with the variations of the weather barometer? When the weather barometer varies from 29 to 31 how much will the vacuum gauge vary and how will that affect the working of the engine? Why?

166. Vacuum is generally stated as so many inches. What is meant by, say, 20 inches vacuum? What does that tell us about the absolute pressure of the vapour then in the condenser?

167. From what depth will a pump draw water? Is there any limit? Why?

168. What is vacuum? Can vacuum move a piston? When the temperature of the water in the condenser is 212° Fahrenheit, what is the greatest degree of vacuum there can then be in the condenser?

169. What is a thermometer? What is its construction? What is the property of matter that is the principle of its construction? What temperatures are regularly noted by careful Engineers?

170. What is the temperature of (1) melting ice, (2) boiling water, (3) steam about 60 lbs. pressure by the steam gauge, (4) steam about 100 lbs., (5) steam about 150 lbs., (6) smoke in the funnel, (7) water in the hot well?

171. What is meant by the "conduction" of heat? Give examples of it in the boiler and in the engine.

172. What is meant by the "convection" of heat? Give examples of it in the boiler and in the engine.

173. What is meant by "radiation" of heat? Give examples of it in the boiler and in the engine.

174. Which is convection, which is radiation, and which is conduction in the following cases:—(1) Heat from the glowing-fuel to the furnace crown? (2) Heat passing from one side of the furnace crown plate to the other? (3) Heat passing from the steam pipes in the engine-room? The heat of evaporation?

175. What are the effective heating surfaces of a marine boiler?

176. What parts of a marine engine are exposed to danger when the temperature is below freezing point?

177. What precautions are necessary in cold climates when the temperature is below freezing point?

178. State as many ways as you can by which a boiler might not get its full feed. A boiler, or one of a set of boilers, gets short of water although the feed valve is open its proper amount; to what causes might this be due?

179. Of what are furnace bars generally made? About what thickness are they at the top? About what space is between them?

180. About how many tons of steam coal will be burnt per day in four furnaces, each 3′ 0″ wide, and of about the usual length? On what grounds do you say so?

181. About how many tons of steam coal will be burnt per day with a good triple expansion engine, surface condensers, the low pressure cylinder 40 inches diameter, doing average work? On what grounds do you say so?

182. A pair of inverted cylinder direct acting engines, there is a liner half an inch thick between the ahead eccentric rod and the eccentric strap, in overhauling the engine this place is lost and forgotten; what difference will its omission make in the working of the engine, on the admission, on the cut off, and on the exhaust of the steam? Which will take place earlier and which later, distinguishing between the up stroke and the down stroke?

183. In a pair of inverted cylinder direct acting engines driving a right-hand screw, on which of the crosshead guide bars is the pressure greatest in the up stroke, and on which in the down stroke?

184. A screw propeller is getting loose, it has a little play on the shaft, sideways on the key or feather; how will this show in the engine room?

185. How would you prove whether the centre line of the trunnions of an oscillating cylinder be fair with the centre line of the main shaft?

186. How can the fairness of a line of screw shafting be tested without lifting the shafts?

187. Where are steel forgings generally used in marine engines?

188. What is the composition of nickel-steel? Where is it sometimes used in engines and boilers?

189. How is forced draught generated on board ship and supplied to boiler-furnaces? Is the air heated before delivery? If so, how?

190 What is "induced" draughts? Compare the merits of "forced" and of "induced" draught.

191. How is the intensity of forced or induced draught measured? What is the usual pressure employed in the mercantile marine?

192 An explosive gas is liberated from bunker coal. Usually in well-ventilated bunkers this gas escapes into the atmosphere without doing harm. In ill-ventilated bunkers the gas after mixing with a certain proportion of common air has been known to explode when a naked light has been brought into contact with it. What is the composition of the gas? Where is it found, in bunkers, pockets and coal shoots? How may it be got rid of as soon as it evolves from the coal? How many cubic feet of air to one of the gas forms a violent explosive mixture?

193. A lighted lamp or candle has sometimes been lowered into an apparently empty paraffin tank and produced an explosion resulting in injury to the person holding the light. What did the tank probably contain, and what produced the explosion?

194 In vessels carrying coal cargoes it has been observed that, generally speaking, the gas which escapes from the body of the coal is found more abundantly at the forward end of the hold than at the after end. Why should this be so?

195. In recently opened ballast tanks, double-bottoms and boilers, a light lowered into either has sometimes been extinguished. What would, in all probability, cause this?

196. In double-bottom steamers where does the bilge water lie, and where are the roses of the bilge pipes fitted?

197. What is the advantage of a large rose over a small one?

198. Why especially in vessels carrying cargoes liable to shift, should engine bilge suctions be fitted to both wings of the bilge?

199 In a heavily listed vessel, why is it difficult to keep steam?

200. What means are sometimes provided for temporarily coupling together the broken parts of, say, a tunnel-shaft? Describe the fitting.

201. Does the pressure on the thrust-collars vary with the horse-power or with the speed of the ship, or how?

202. If the holding-down bolts of a thrust-bearing should become slack, what effect would it have upon the working of the engines?

203. In an engine with three cranks, which of the three is subject to the greatest torsional stress (1) in going ahead, (2) in going astern?

204. Is it usual to make the crank shaft of a triple or quadruple expansion engine in one piece? And is the diameter of the shaft uniform from end to end? Give your reasons for the practice which obtains.

205. In a "built" crank shaft how are the webs rigidly secured to the pins and to the body of shaft?

206. There are various descriptions of donkey engines in use on board ship for pumping purposes. Some pumps are fitted with escape-valves, some are not. Why should this be?

207. Explain the function of an air vessel fitted to a feed pump. Make rough hand sketches of (1) a satisfactory vessel, (2) an unsatisfactory vessel, where, say, the air spring has been destroyed by carelessness, or has never been properly provided.

208. Should cocks or escape valves be fitted to air-vessels? Why, or why not?

209. Where, by preference, should the escape valve of a feed pump be placed? Why?

210. Scum cocks are sometimes fitted to boiler-shells at a height convenient for Engineers to manipulate when standing in the stokehold; the scum pipes in such cases are laid upward, inside the boiler, to a little above the combustion chamber tops. What danger may arise from this arrangement?

211. Cocks for testing the water level of boilers are sometimes fitted within reach of the engineer who is standing in the stokehold. These may have internal pipes leading upward and terminating at various levels. Under what circumstances may these become misleading?

212. Why should the pipe which leads from the bottom of the water-gauge column to the bottom of the boiler-front, or back, be covered with non-conducting material? Why also should it never have lengthy horizontal bends?

213. In your own experience, how frequently is this pipe removed and cleared?

214. Why, even with the best of water-gauges, is it advisable occasionally to use the drain-cock?

215. Steam loops have sometimes been inadvertently made in the length of piping leading from the top of the water-gauge column to the top of the boiler. Roughly sketch such a loop and explain the danger arising from its existence.

216. Describe your method of thoroughly testing the water-gauge system to satisfy yourself that all the cocks and pipes are clear. Your answer can be written on a supplementary sheet of foolscap, which the examiner will hand you. Hand sketches, mere lines indicating pipes, and circles indicating cocks, should be made. Identify the cocks and pipes by letters or numerals.

217. Describe the construction of a water-tube boiler, mentioning the type selected.

218. In a water-tube boiler how is an economiser fitted, and what is its duty?

219. How is the water-gauge fitted in a water-tube boiler? Are glass-gauges used?

220. The pressure of the steam in water-tube boilers is sometimes greater than at the engines. Why is this, and what percentage above the engine pressure does it amount to? How is this difference of pressure maintained?

221. Describe any automatic method of feeding water-tube boilers. Of what material are the tubes made?

222. Describe the construction of any steam turbine you are acquainted with, which is used on board ship. How is the expansion of steam effected? How many propeller shafts are employed, and how many propellers?

223. Is the same power in a steam turbine available to go astern as to go ahead?

224. Of what material are the propellers made in a steam turbine?

225. How many pounds of coal per indicated horse-power per hour are burnt with turbine engines? Name the type of boiler in use.

226. Describe the construction of a feed-water-heater and give the name of its manufacturer.

227. To about what temperature is the feed-water raised by passing through a feed-heater?

228. What fittings are usually placed on a feed-heater? Why are they necessary?

229. Describe any well-known independent feed-pumps.

230. Are independent feed-pumps automatic in their action? Explain the action.

231. What advantage, if any, have independent feed-pumps over feed-pumps worked by the main engines?

232. Describe the construction of a feed-filter, enumerating its valves and cocks.

233. How can the filter be cleaned? What ingredients are generally removed when cleaning takes place?

234. What is the intercepting material in a filter made of? How is it fitted?

235. Describe an evaporator, and mention the type.

236. What fittings are necessary with evaporators?

237. How is the brine got rid of in an evaporator?

238. How may the evaporator coils be cleaned?

239. What is a dynamo? Describe its various parts. For what is it used?

240. In what respect does an electric motor differ from a dynamo? Where are electric motors sometimes used on board ship?

241. Describe a system of electric lighting employed on board ship.

242. How is the position of a fault in the electric circuit discovered?

243. What is "sparking" and may it under some circumstances (naming them) be a danger?

244. What is "short-circuiting," and to what evil may it give rise?

245. What means are employed to prevent any part of the circuit becoming overheated?

246. Describe the features of an arc-lamp.

247. Describe the construction of a glow-lamp.

248. What is the usual candle-power of the small glow-lamps in general use on board ship?

249. Define the following terms: Ampere, volt, ohm, watt. What is the measure of an electrical horse-power?

250. Explain the uses of switches, brushes, commutators, cut-outs, field-magnets, armatures and resistance-coils.

251. Why is it desirable to fit a dynamo in a cool place on board ship?

252. What undesirable effect will ultimately occur to an electric wire whose sectional area is constantly diminishing, say, through corrosion?

253. What danger might arise from leading electric wires through coal bunkers?

254. Is it better to lead electric wires above or below side-scuttles? Why?

255. What instruments are used on board ship to ascertain the strength of an electric current?

256. In vessels fitted with hydraulic cranes, etc., where do they obtain their power? How is the hydraulic pressure kept at a relatively constant amount?

257. Describe any steam-steering gear you are acquainted with.

258. When the helm is put hard over and the ship is going full speed ahead, what prevents the rudder returning to the amidship position?

259. In the case of a steamship under way, does the officer or man manipulating the steam-steering wheel overcome any resistance exerted by the rudder?

260. Explain clearly what is being done by a helmsman manipulating the wheel of a steam-steering engine.

261. Is there any difference between the amount of horse-power required to put a helm hard over, in a given time, when the vessel is going full speed ahead, and when she is going full speed astern? This question refers to the case of a steamer fitted with one rudder only, and demands a more complete answer than merely "yes" or "no."

262. What precautions should be taken before removing a manhole-door of a steam-boiler? In the absence of such precautions, what casualties might occur?

263 Describe the chief features of the engine-governor fitted to a steamer you have served in. Describe its action, give the maker's name and name of ship.

264. Name the principal parts of internal combustion engines, and briefly state their functions.

265. What kind of oil is usually employed in motor-engines? What is its flash-point? What is its specific gravity? What is its calorific power? What precautions are taken in its storage to guard the public against the casualty by fire or explosion?

266. How many cylinders are generally used in motor-engines? What kind of pistons are usually fitted? How frequently (measured in revolutions) is explosion per cylinder effected? How is explosion in the cylinder carried out?

267. Describe how an oil-motor is started. If starting proves difficult, where would you chiefly look for defects? How is piston speed modified? How is the speed of vessel varied? How is reversing effected?

268. Before examining an oil-motor with a naked light, what steps should be taken for safety's sake?

269. How frequently should an internal combustion engine be opened up for examination, cleaned, and its parts readjusted? What difficulty arises when the internal parts become foul with carbonized oil?

NOTE.—Questions should be read in the light of their context. Thus the "sparking" referred to in question 243 relates to the sparking in an electric lighting circuit on board ship. (*See* question 241.)

Appendix C.

[*See Rule 28 (d).*]

Reading the Water-Gauges.

(Engineers and Engine-drivers.)

Notwithstanding that reading of the water-gauge is made a special feature in the examination of Engineers, many boiler casualties result from the Engineer of the watch either not understanding the construction of the water-gauge fittings or not satisfying himself by actual trial that the cocks, pipes, etc., are clear.

In one case, two furnace crowns came down in a steamer that was just starting on a voyage. The Engineers were satisfied that there was plenty of water in the boiler because the water-gauge showed full glass, and they called the attention of the Surveyor to this fact as being conclusive evidence that the casualty could not have resulted from shortness of water. On examination of the fittings, however, it was found that the cock between the boiler and the steam pipe leading to the gauge was shut, having been carelessly left in that position on the previous day when the mountings were overhauled for survey. Directly the cock was opened the water disappeared from the gauge-glass, and the Second Engineer admitted that he had blown down the boiler in order to lower the water level, as the glass was full.

Many steamers have had their furnaces brought down at sea in a similar manner to the above through what the Engineers of the watch have called "false water in the glass," and which on examination has been found to result from the top communication being choked.

These casualties resulted from what, to say the least, was bad management, not false water.

Unless a candidate under examination is able to prove that he understands how to verify the indications of the water-gauge, he should not be passed in practical knowledge and, as failure in practical knowledge involves the candidate going to sea for another three months before being eligible for re-examination, the Examiner should explain to such candidate his error, after failing him, in order to prevent further casualties resulting from his want of knowledge on this subject.

The sketches, Figures 1, 2, 3, 4, and 5, Plate I, represent the usual methods of attaching water-gauge mountings to marine boilers. The

important features in each gauge and the method of verifying its indications are dealt with separately in the following remarks:—

Plate 1

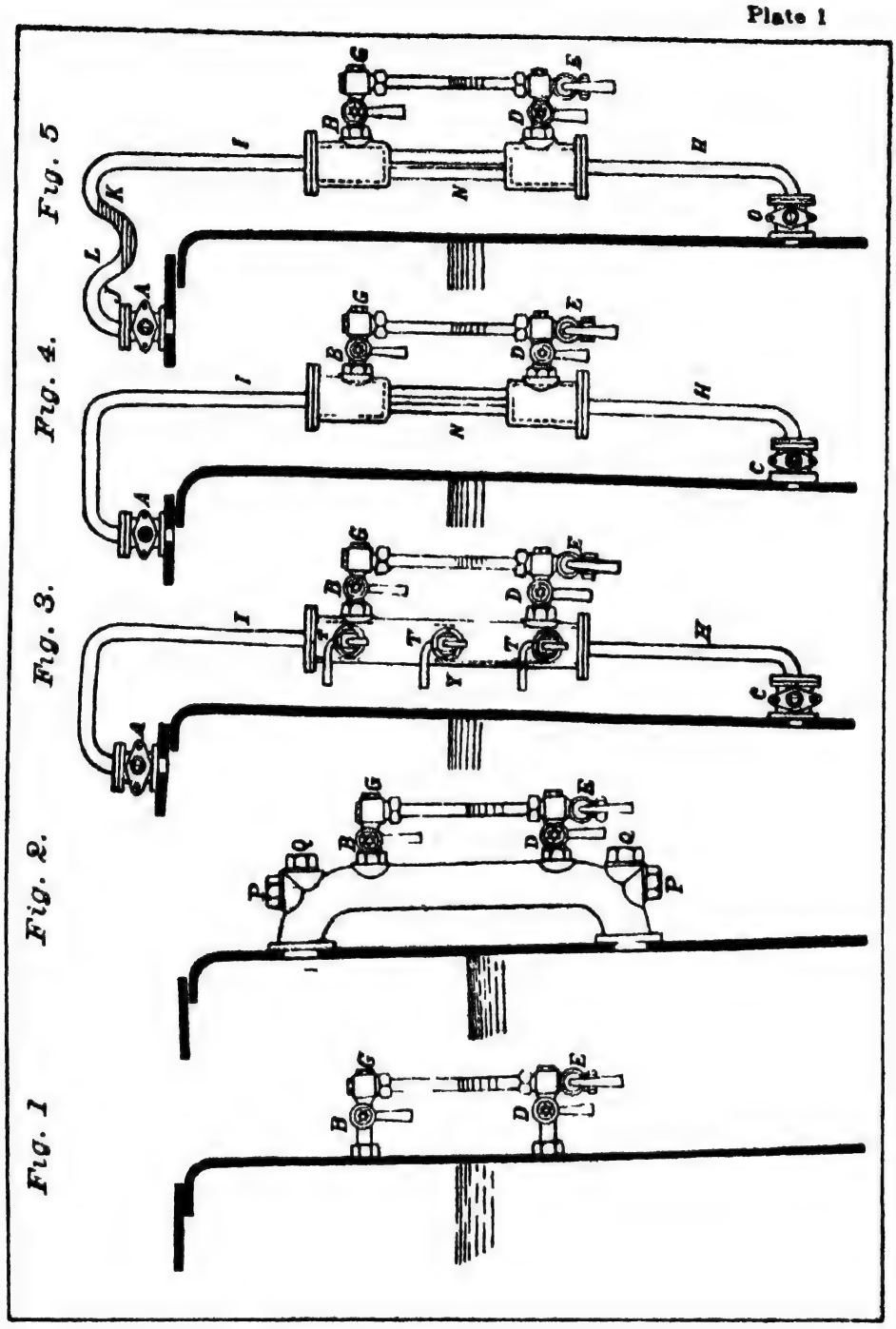

REFERRING TO FIGURE 1 ONLY.

In this case the water-gauge cocks are attached direct to the boiler, and the accuracy of the gauge when the boiler is under steam can be tested as follows:—

First.—Let B remain open, then close cock D and open cock E, and if steam issues it proves that cock B and the passage through the top fitting and gauge-glass are clear. If no steam or water issues, either cock B or the passage through the top fitting and gauge-glass is chocked and the gauge cannot act properly until the obstruction is removed.

Second.—Close cock B and open D and E, and if water issues, cock D is clear. If no water or steam issues, either cock D or the passage from the boiler through the lower fitting is chocked and must be cleared before the gauge can act properly.

REFERRING TO FIGURE 2 ONLY.

In this case the gauge cocks are attached to a bent pipe of comparatively large diameter (at least 3 inches in the bore), the upper end of which communicates with the steam space, and the lower end with the water space of the boiler. Owing to the bore of the pipe being large it is not liable to become choked or stopped under the ordinary conditions of working. The water-gauge is, therefore, in practically the same condition as if it were attached direct to the boiler, as in Figure 1. This gauge, when at work, is tested in precisely the same manner as the one shown in Figure 1.

Screw plugs are inserted at P.P. and Q.Q., by the removal of which the apertures in the pipe can be cleared, if necessary, by the insertion of a wire or rod when steam is down.

REFERRING TO FIGURE 3 ONLY.

In this gauge there is an open communication from A to C through the column Y, and in order to "blow through the *glass*" it is only necessary to shut cocks D and B alternately keeping E open. But to "blow through the *water-gauge*," including the pipes H and I, it is necessary, after blowing through the glass as described above, to shut A and C alternately, at the same time keeping B, D and E open for such time as will ensure the complete discharge of the contents of the gauge and its connections. When B, D and C are clear and A choked the steam lodging in the glass and in the pipe I leading from column Y to A becomes condensed and the water flowing through C to take its place rises in column Y and in the glass to a level above that of the water in the boiler. In other words, the gauge shows a false level. If now E be opened and water is blown out, then on E being again closed the water in the gauge will rise higher than before and be still further misleading. On the other hand, when B, D and A are clear and C choked, the water, if any, in the glass is trapped and no longer rises and falls with the water in the boiler or with the motion of the vessel; it, however, slowly rises in the glass owing to the condensation of the steam in the upper part of the gauge until such time as E is opened when the whole of the water in the glass is blown out, and on E being closed the glass does not show any water notwithstanding that the water in the boiler may be at the proper level. When the test cocks T T T are attached to column Y, as shown in Figure 3, they cease to be reliable when either cock A or C or the pipe in connection therewith is choked, or nearly choked.

REFERRING TO FIGURE 4 ONLY.

Sometimes the water-gauge fittings are arranged as shown in Figures 4 and 5, with no passage up the column, the central portion (N) of the column, being simply a pillar or connecting piece of any convenient section between the upper and lower portions to which the cocks B and D are attached.

By this arrangement double communications are obviated and there is no need for what is known as "double shut off" in testing the accuracy of the gauge. When, however, the gauges are constructed in this manner the cocks B and D are unreliable as test cocks in the event of there being no glass in the gauge. This feature should be carefully noted. Moreover, when in working condition the reduction of pressure in the glass which arises when E is opened causes the water in pipe H to rise above its normal level. This objectionable feature should also be noted.

REFERRING TO FIGURE 5 ONLY.

Sometimes there is a bend, L, in the steam pipe, I, leading from cock A to cock B. This has occasionally escaped observation when new boilers have been fitted on board ship. In most cases this bend arises from the pipe being led in an abnormal direction to escape other pipes, beams or fittings near the smoke box. With such a bend the condensed steam collects in the pipe and falls to the bottom of the bend, and in time it completely fills the pipe from J to K. The steam from K down to the level of the water in the glass is thereby trapped and, as condensation proceeds, leads to a reduction of pressure in the pipe below that of the boiler and an equivalent rise of the water in the bend and also in the gauge glass. When the vessel is quiescent the water in the gauge glass increases in height until cock E is opened or until the pressure in the boiler is so much in excess of that in the lower part of pipe I, as to cause the water in the bend to be blown into the gauge glass. In either case instantaneous change to water level in the glass ensues.

In the ordinary course of working the phenomenon described above is more or less modified by the presence of air in the upper part of the gauge and by the rise and fall of the water in the boiler and gauge glass arising from the rolling or pitching motions of the vessel.

Other special points to be noted.

When the cocks A and C are omitted, as in Figure 2, it is owing to the bore of the stand pipe being sufficiently large to enable it to be regarded as part of the boiler. Such pipes require, however, to be examined and cleared at intervals by passing a rod through the holes provided for the purpose at P.P. and Q.Q.

Cocks at A and C are not necessary for the testing of gauges arranged as shown in Figures 4 and 5. Examiners ought, however, to make sure that candidates are aware of the impossibility of testing the reliability of the indications of water-gauges arranged as in Figure 3 when the cocks A and C are absent and of the effect which the choking of cock A or C, or pipe H or I has on the indications of the test cocks T T T attached to column Y.

Probably more than half the steamers afloat are fitted with water-gauges as shown in Figures 3 and 4, and it is therefore specially important that Engineer candidates should thoroughly understand their construction, the principle on which they act, and the steps which must be taken to keep them in an efficient condition.

When fitting a gauge glass into its place it is specially important that it should not be placed so high as to prevent a clearing rod being inserted at G, Figures 1, 2, 3, 4 and 5. This defect, especially if it occurs in a water-gauge attached to a boiler subject to priming, permits a rapid accumulation of scum around the top of the glass and results in the choking of the orifice leading from cock B to the gauge glass in each of the figures.

When a gauge glass is too short or is placed either too high or too low in the fittings, it is also liable to become choked by the packing material being forced over its ends by the glands whilst being screwed up.

The use of unsuitable or insecure internal pipes in connection either with the ordinary glass gauge cocks of the description shown in Figure 1, or with test cocks which are jointed to the boiler itself should also be carefully guarded against.

Boiler casualties have resulted from the cocks B and D having the parts wrongly placed as shown in Figure 6, Plate 2. In one case of that kind, the Engineer in testing the water-gauge omitted to see that the passages in the cocks B and D were clear *when the handles were in their proper working position*. This defect could easily have been discovered if proper attention had been paid to the condition of the cocks. A defect of this nature may be due to faulty construction originally, or to the handle of the cock having been overstrained, and the neck twisted, Whether the passages in the plugs are fair and clear can, however, be verified in a few minutes. As an illustration, the water cock D, Figure 6, Plate 2, can be verified by blowing through E with B shut and then moving the handle of D to one side until it is just closed, and then to the other side until it is again just closed; the proper working position of the handle is about equally distant from each of the above position. The other cocks can be verified in the same manner.

Another serious casualty occurred through the handle of the cock A, Figure 3, having been twisted from its original position relatively to the orifice of the cock, resulting in the cock being shut when apparently open.

When a water-gauge, that is clear in all its parts, has been thoroughly blown through, the water in the glass rises above the level at which it formerly stood, immediately the drain cock E is closed, but if left undisturbed for a time it gradually falls to its former position. The amount of rise which occurs on these occasions depends chiefly on the temperature of the contents of the boiler and on the length of the pipes by which column Y is connected top and bottom to the boiler, but in cases where the gauge is of the description illustrated in Figures 3, 4 and 5, it amounts in high pressure boilers to

Plate 2.

Fig 6.

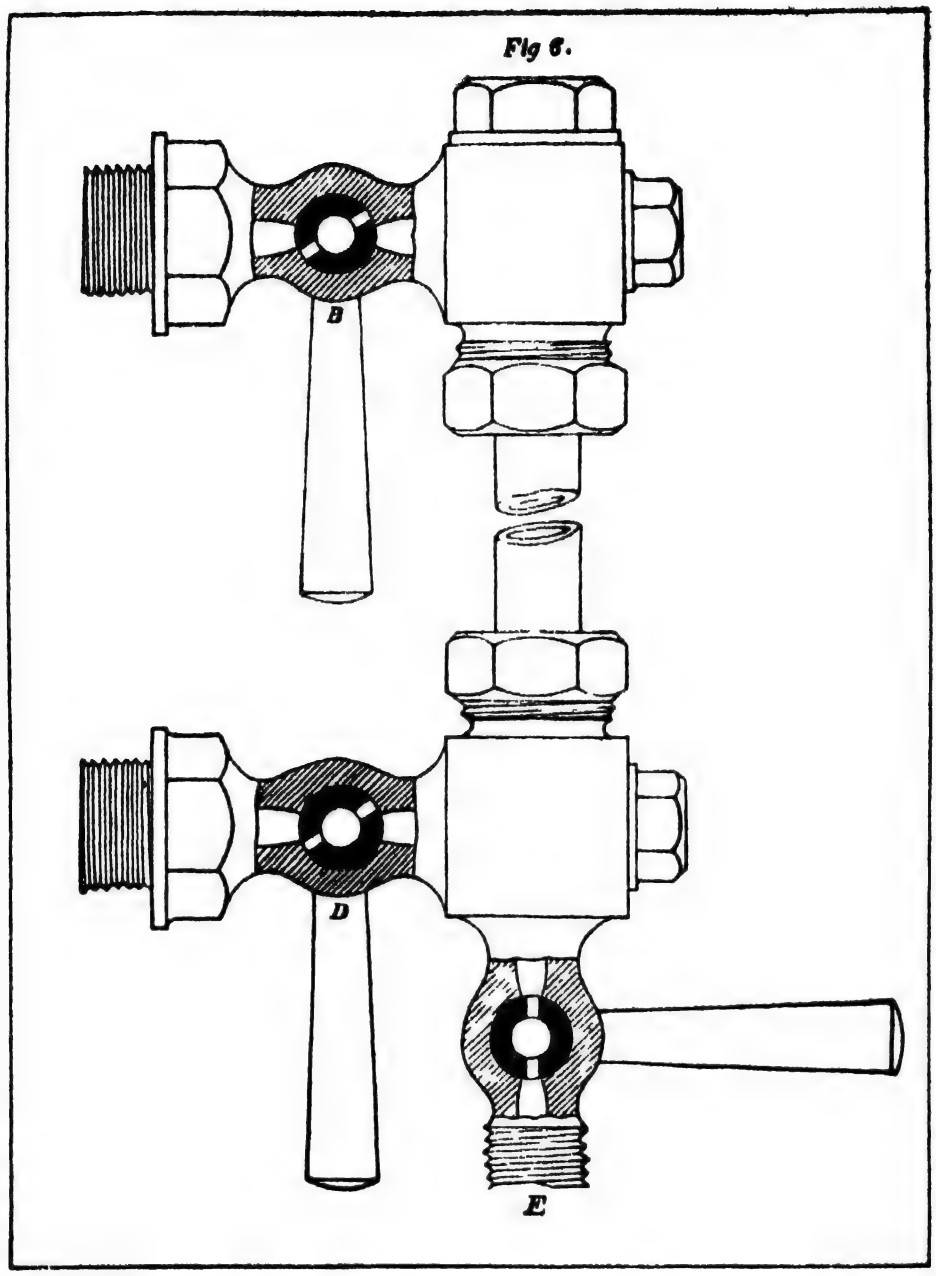

about 4 inches, while the time occupied by the water in returning to its former level ranges from 30 to 40 minutes. The cause of this rise is twofold, namely, (*a*) the displacement of the comparatively cold water in pipe H by hotter, and proportionately lighter, water from the boiler, and (*b*) a slight condensation of the steam and a corresponding fractional reduction of pressure in pipe I. The cause of the gradual subsidence of the water in the glass to its former level is also of a dual character, namely, (*a*) the cooling of the water in pipe H, and (*b*) the diminution in the condensation of steam in pipe I owing to the collection therein of air released from the steam condensed.

These results will, however, be somewhat modified if the water in the boiler is of higher density than in pipe H, and this will nearly always be the case owing to the condensation of the steam in the glass and upper fittings of the water-gauge, causing the water in the lower part to be fresher than that in the boiler.

The Examiner should impress upon candidates the necessity for periodically blowing through the water-gauge on each boiler (no matter what the form may be) in a systematic and thorough manner, and, in cases where a boiler is fitted with two water-gauges, of keeping both in constant use; finally, he should further impress upon them the necessity for keeping the water-gauges well lighted, clean, and in all respects efficient.

Appendix D.

[*See Rules 28 (a) and 28 (o).*]

Examination in rough working drawing for an Engineer's Certificate of Competency.

1. The regulations in regard to the qualifications of a candidate for an Engineer's certificate of competency specify that—

He will be required to make an intelligible hand sketch, or a working drawing of some one or more of the principal parts of a steam-engine, and to mark in, without a copy, all the necessary dimensions in figures, so that the sketch or drawing could be worked from.

He must be able to state the general proportions borne by the principal parts of the machinery to each other.

2. In accordance with these clauses, a candidate for an Engineer's certificate is required to make a rough working drawing of the parts specified. An Engineer who has been some years in charge of marine engines and boilers ought to have familiarly in his mind the general construction of at least one set of engines and boilers, say, that set he was last with. Fine drawing is not expected, and in the proportions of the parts a wide margin will be allowed; absurd dimensions will be failure in practical knowledge.

3. The drawing must, however, be practically a working drawing, giving a sufficient number of views to show the parts fully—sections, plans, or elevations—just as the candidate would require to be supplied to him if he had to make the parts represented to the design of another person.

4. A clear hand sketch showing the construction completely, and fully dimensioned, will be accepted if the candidate prefers this alternative.

5. A portion only of the parts specified may be accepted in place of the whole, if that portion is sufficient to show that the candidate has a good practical idea of the construction of the parts, and a fair notion of their general proportions or dimensions.

6. Candidates are cautioned not to put on paper what they have not fully considered, and deliberately intend to be understood, as evidence of what they know about the construction of any part required.

7. The statements given in by a candidate may be in themselves, apparently, of little importance, but, as sample material from which the extent of the candidate's knowledge of engines and boilers is to be inferred, every detail which is glaringly inconsistent with a sound knowledge of the use of the part, or in which an essential consideration has evidently been overlooked, is an important element in the description which the candidate is giving of his own qualifications.

8. The candidate is advised not to begin more than he can clearly finish in the time allowed. An important object in this part of the examination is to ascertain whether the candidate can be trusted to mark all necessary dimensions upon a sketch or a drawing. The test of this is, practically, the making of the part from the sketch without having to supply additional dimensions, and without measuring the drawing. To prove this ability the candidate must fully dimension the parts shown in his sketch or drawing, notwithstanding that the parts may be correctly drawn to scale. A drawing is fully dimensioned when no part of it is left to the option of the party who is to work to the drawing.

9. To prevent misunderstanding, however, when the candidate has been led into showing more of the details than he has time fully to finish, he should name in the statement on the other side, the particular parts which he has fully dimensioned.

10. All dimensions should have lines and darts, to indicate distinctly the points between which the dimensions are given.

11. Beware of writing cross dimensions upon centre lines, or upon longitudinal dimension lines. This is not an order, but a recommendation.

12. The candidate is not expected to design anything; he has merely to sketch or draw something with which he is expected to be already familiar. At the same time he should call attention to any defect in the design of the article or apparatus. Omission to do so will imply want of practical knowledge.

13. Pencil in nothing after half-past 3; all the dimensions, the figures, and the darts must be inked in; employ the remaining time in examining the drawing and in inking in any figures which may have been before overlooked and in checking the dimension.

14. Make sure that you will have sufficient room on the drawing sheet to show all the necessary views. You can have another sheet of drawing paper if necessary. All the paper used must be forwarded with the drawing.

SPECIMEN.

Subject for examination in rough working drawing.

(Read the foregoing general instructions.)

A common slide valve with its spindle. Show also an outline section of the parts at the cylinder face. Show the provision for connecting the side valve to the spindle.

The candidate is requested to fill up the following, and to attach this paper to his drawing:—

Statement by the candidate.

The accompanying drawing, made by me this day, without referring to any document, and without the assistance of any person, is intended by me to be sufficient for the new construction of the parts above described to fit the places of similar parts which are to be removed. The construction is similar to what I have been with in the————steamer ————————, but the dimensions may be different.*

The diameter of the cylinder is————————————

The stroke of the piston is————————————

The travel of the valve is————————————

The cover at top end on steam side is————————————

The cover at bottom end on steam side is————————————

The lead at top is intended to be————————————

The lead at bottom is intended to be————————————

The inside cover is————————or————————————

The thickness of the face of valve is————————————

The thickness of the body of valve is————————————

The greatest opening for steam will be————————————

That gives an area equal to one————————th of the piston.

The opening for exhaust when the crank is on the top centre is——
————————————.

That gives an area equal to————————th of piston.

The length of the connecting rod is————

The valve will cut off steam on the down stroke at ————

The valve will cut off steam on the up stroke at ————

} The candidate may omit this part if he chooses.

It is required that all the parts shall be fully dimensioned in ink, but if owing to want of time this has not been done, the parts not fully dimensioned must be stated, otherwise it will be understood that the candidate considers the dimensions given sufficient.

The parts fully dimensioned are————————————

Dated at————this————day of————191 .

————————*Candidate.*

*Run the pen through the words that do not apply.

Appendix E.

Application to be examined for a Certificate of Competency as Engineer, first/second class Engine-driver, under the Inland Steam-vessels Act, 1917 (Act I of 1917).

NOTE.—This form can be obtained at the Port Office free of charge. Divisions (A), (B), (C), (D), (E) and (G) of this paper are to be filled in by the applicant for examination at the Port Office, Calcutta or Chittagong, or at the Subdivisional Office, Goalundo, and handed to the Principal Officer, Mercantile Marine Department, Calcutta/ Nautical Surveyor, Chittagong, or the Principal Engineer and Ship Surveyor, as the case may be, with his testimonials and former certificate, if any. No remuneration or gratuity whatever must be offered to or received by any officers or servants of the Government, beyond the fees mentioned in the Regulations. Any officer, messenger or servant of the Government who accept any present or gratuity, will be immediately discharged from his office, and any candidate so offering money will be regarded as having committed an act of misconduct and will be rejected and not allowed to be examined for 12 months.

(A)—Name, etc., of applicant.

1. Name at full length.

2. Surname.

3. Father's name.

4. Permanent address, stating town, street and No. of house, and name of person (if any) with whom residing.

5. Date of birth.

6. Where born—

(*i*) Town or village and thana.

(*ii*) County, Country or District.

(B)—Particulars of all previous Certificates (if any) where issued in the United Kingdom, the British Possessions, or elsewhere.

Number.	Competency or service.	Grade.	Where issued	Date of issue.	If at any time suspended or cancelled, state by what Court or authority.	Date	Cause.
7	8	9	10	11	12	13	14

(C)—Certificate now required.

15. Grade.

16. Competency or service.

17. Mercantile Marine Office to which it is to be sent.

(D)—If applicant has failed in a previous examination for the certificate now required, he must here state when and where. If he has not failed, he must state so in writing across this division.

18. Date.

19. Port.

20. Subjects in which he failed.

(E)—Declaration to be made by applicant.

I do hereby declare that the particulars contained in divisions (A), (B), (C), (D) and (G) of this form are correct and true to the best of my knowledge and belief; and that the papers enumerated in division (G) and sent with this form are true and genuine documents, given and signed by the persons whose names appear on them. I further declare that the statement (G) contains a true and correct account of the whole of my services without exception.

And I make this declaration conscientiously believing the same to be true.

Signed in the presence of the Principal Officer/Principal Engineer and Ship Surveyor/Nautical Surveyor of

Signature of applicant.
Present address.

Date.

(F)—Principal Officer/Principal Engineer and Ship Surveyor/Nautical Surveyor to Examiners.

The declaration (E) above was signed in my presence, and the fee of Rs. has been received by me.

Signature.
Designation.

Date.

(G)—List of testimonials and statement of service on shore and at sea.

(The testimonials to be numbered consecutively according to the number given in column 21 below.)

No. of testimonials (if any).	Where employed or Ship's name.	If service on Boardship.		Service of applicant.						Trade in which employed.	Remarks.	Initials of verifier
		Horse-power of engines.	Port of Registry and Official No. of ship.	Capacity.	Date of commencement.	Date of termination.	Time employed in this service.					
							Years.	Months.	Days.			
21	22	23	24	25	26	27	28	29	30	31	32	33
Total service on steamers ..												
Do. do. on shore ..												
Total of above service ..												

(H)—Certificate of examiners.

NOTE.—The examiners should fill up divisions (H) and (I) and in all cases as soon as possible forward this paper to the Principal Officer, Mercantile Marine Department, Calcutta/Nautical Surveyor, Chittagong. If the applicant passes, his testimonials and previous certificate, if any, must be sent with this paper to the Principal Officer, Mercantile Marine Department, Calcutta/Nautical Surveyor, Chittagong. The new certificate and the testimonials will be delivered to the applicant at the office named in division (C) 17.

34. Date and place of examination.

35. Insert passed or failed against each item below—

(*i*) In working out the questions.

(*ii*) In the *viva voce* examination.

36 Rank for which passed.

(I)—Personal description of applicant.

37. Height feet inches.

38. Complexion.

39. Personal marks or peculiarities, if any.

40 Colour of—

(*i*) Hair.

(*ii*) Eyes.

I/We hereby certify that the particulars contained in divisions (H) and (I) are correct.

This form and the testimonials are forwarded to the Principal Officer, Mercantile Marine Department, Calcutta/Nautical Surveyor, Chittagong.

Signature of examiners.

Date.

To

The Principal Officer, Mercantile Marine Department, Calcutta/Nautical Surveyor, Chittagong.

PUBLIC WORKS DEPARTMENT.

Establishment.

NOTIFICATIONS.

Minister-in-charge: The Hon'ble Khan Bahadur Maulvi K. G. M. Faroqui.

No. 43.—9th July 1931.—Babu Upendra Nath Mukharji, Assistant Engineer, 2nd Calcutta Division, is, in the interests of the public service, transferred to the Jalpaiguri Division in the Northern Circle.

L. R. FAWCUS,
Secy. to the Govt. of Bengal.

No. 41.—4th July 1931.—Babu Ram Nath Chatterji, Assistant Engineer, Chittagong Division, is granted, under rule 81 (*b*) (*ii*) of the Fundamental Rules, leave on average pay for one month and fifteen days, in extension of the leave already granted to him in notification No. 34, dated the 1st April 1931.

No. 42.—9th July 1931.—Babu Radha Ballabh Sarkar, Assistant Engineer, Jalpaiguri Division, is granted, under rule 81 (*b*) (*ii*) of the Fundamental Rules, leave on average pay for four months, with effect from the 1st July 1931, or any subsequent date on which he may be relieved.

W. J. KERR,
Chief Engineer (offg.).

DEPARTMENT OF AGRICULTURE AND INDUSTRIES.

Agriculture.

NOTIFICATION.

Minister-in-charge: The Hon'ble Khan Bahadur Maulvi K. G. M. Faroqui.

Dacca.—No. 2872Agri.—7th July 1931.—Babu Surendra Chandra Rakshit, Laboratory Assistant under the Agricultural Chemist to the Government of Bengal, is appointed to act as Assistant Agricultural Chemist, during the absence, on leave, of Babu Gosta Behari Pal, or until further orders.

Veterinary.

NOTIFICATIONS.

Minister-in-charge: The Hon'ble Khan Bahadur Maulvi K. G. M. Faroqui.

Dacca.—No. 2898Vety.—9th July 1931.—Maulvi Mahammad Sanwar Chowdhury, Veterinary Inspector, is appointed to act as Assistant Director, Civil Veterinary Department, *vice* Rai Sahib Sharat Chandra Pal, Assistant Director, Civil Veterinary Department, Western Range, retired, or until further orders, and is posted to Dacca in charge of the Eastern Range.

Calcutta.—No. 2899Vety.—9th July 1931.—Rai Sahib Nripendra Nath Mazumdar, Assistant Director, Civil Veterinary Department, on leave, is posted to Calcutta in charge of the Western Range.

Excise.

NOTIFICATIONS.

Minister-in-charge: The Hon'ble Mr. Bijoy Prasad Singh Roy.

No. 2884Ex.—16th July 1931.—In exercise of the powers conferred by section 27 of the Bengal Excise Act, 1909 (Bengal Act V of 1909), the Government of Bengal (Ministry of Excise) are pleased to direct that, with effect from the date of this notification, industrial or potable foreign liquors specified in Column I of the Schedule hereto appended shall be charged with duty at the rate specified in Column 3 thereof, when such liquors are imported, exported, transported, or manufactured under any license granted in respect thereof. This cancels paragraph 27 of notification No. 596 S.R., dated the 30th March 1915, and all subsequent notifications relating to duty on "Foreign liquor."

Schedule.

PART I.

Column I.	Column II	Column III. Rs. a. p.
1. Indian-made spirit, except denatured spirit, used for and contained in medicinal preparations, or for scientific and industrial purposes, unless totally exempted in any case .. .	Per L. P. gallon	5 0 0
2. Indian-made spirit contained in perfumeries and toilet preparations	Do. ..	17 8 0

PART II.

1. Indian-made plain spirit including absolute alcohol and rectified spirit, and Indian-made brandy, whisky, gin and rum	Per L P. gallon	21 14 0
2. Liqueurs, cordials flavouring essences and other similar potable alcoholic preparations containing Indian-made spirit		
(*i*) If tested	Do. ..	21 14 0
(*ii*) If untested ..	Per Imperial gallon.	29 0 0

PART III.

1. Champagnes and other sparkling wines containing not more than 42 per cent. of proof spirit ..	Per Imperial gallon	10 8 0
2. Other wines containing not more than 42 per cent. of proof spirit	Do. ..	6 0 0
3. Wines containing more than 42 per cent. of proof spirit ..	Per L.P gallon	21 14 0

PART IV.

1. Ale, beer, porter, cedar and other similar fermented liquors ..	Per Imperial gallon (in barrels or other containers holding 27 ozs. or more) .	0 12 0
	Per bottle (less than 27 ozs. but not less than 20 ozs.)	0 2 0
	Per bottle (less than 13½ ozs. but not less than 10 ozs.) ..	0 1 0
	Per bottle (less than 6½ ozs. but not less than 5 ozs.) ..	0 0 6
	Per Imperial gallon otherwise than as specified above ..	1 0 0

Burdwan - Birbhum - Bankura - Midnapore.—No. 2900Ex.—10th July 1931.—In exercise of the power conferred by section 90 of the Bengal Excise Act, 1909 (Bengal Act V of 1909), the Government of Bengal (Ministry of Excise) are pleased to direct that after clause (*l*) of paragraph 37 of notification No. 596S.R., dated the 30th March 1915, as subsequently amended, the following new clause be *added* namely:—

"(1A) *Bakhar* is exempted from the provisions of the Act relating to sale to and possession by persons belonging to the aboriginal tribes in the Burdwan, Birbhum, Baukura and Midnapore districts for such period during the *Bandhana* festival as may be notified in this behalf by the Collector."

L. R. FAWCUS,

Secy. to the Govt. of Bengal.

Orders by the Commissioner of Excise and Salt, Bengal.

No. 10Exc.—7th July 1931.—Babu Jatindra Bhusan Acharyya, Temporary Inspector of Excise and Salt, Burdwan, is granted leave on average pay for four months from 20th May 1931.

No. 11Exc.—7th July 1931.—Maulvi Muhammad Mukhtar Ahmed Chowdhury, probationary Inspector of Excise and Salt, Nauguon, is transferred to Calcutta (Detection Branch).

S. K. RAHA,

Commr. of Excise and Salt, Bengal.

REVENUE DEPARTMENT.

Land Revenue.

NOTIFICATIONS.

Nadia.—No. 8490L.R.—8th July 1931.—In exercise of the powers conferred by sub-section (*3*) of section 158A of the Bengal Tenancy Act, 1885 (VIII of 1885), the Governor in Council is pleased to appoint for the purpose of that section Babu Ashutosh Banarji, Sub-Deputy Collector, to perform the functions of a Certificate Officer under the Bengal Public Demands Recovery Act, 1913, for the recovery of any arrears of rent (including cesses) due to the Bequest estate of the Birnagar Municipality, in the district of Nadia.

Nadia.—No. 8491L.R.—8th July 1931.—In exercise of the powers conferred by section 3 of the Bengal Land Revenue Settlement Regulation 1825 (IX of 1825), read with section 20 of the Bengal Land Revenue Settlement Regulation, 1822 (VII of 1822), the Governor in Council is pleased to vest Babu Ashutosh Banarji, Sub-Deputy Collector and Assistant Settlement Officer, Nadia, who has, by notification No. 6178C.P., dated 22nd June 1931, been vested by the Board of Revenue with the powers of a Collector in the Bequest estate of the Birnagar Municipality, in the district of Nadia, for the purpose of the work of maintenance of the record-of-rights of that estate, with powers under section 19 of the said Bengal Land Revenue Settlement Regulation, 1822, within the local limits of that estate, to require and compel persons mentioned in the section to attend and produce accounts and other papers and to examine such persons under that section for the purpose of the said work of the maintenance of the record-of-rights.

Land Acquisition.

NOTIFICATIONS.

Faridpur.—No. 8637L.A.—13th July 1931.—Whereas it appears to the Governor in Council that land is likely to be required to be taken by Government at the public expense for a public purpose, viz., for repairs to formation due to floods in 1930 in miles 10 and 11, outfall for drain and repairs to formation in mile 13, completing the formation in mile 15, drain and repairs to formation due to floods in 1930 in mile 16, drain in mile 20 and level crossing No. 7B in mile 26B in connection with the construction of the Kalukhali-Bhatiapara Railway and Madhukhali to Kamarkhali branch of the same Railway in the villages of Faridpur, Paturia, Parkul Gohailbari, Jadabpur, Gosain Gobindapur, Char Durgapur, Danga Hatimohon and Mirzapur, jurisdiction list Nos. 157, 169, 175, 181, 188, 215, 217, and 218, respectively, thana Baliakandi, parganas Mahimsahi and Nasibsahi and in the villages of Gondardia and Maslandapur, jurisdiction list Nos. 41 and 2, respectively, thana Bhushna, pargana Satair, district Faridpur, it is hereby notified that for the above purpose plots of land comprising portions of the cadastral plots Nos. 532, 545, 548, 551, 547, 553, 560, 554, 555, 558, 556, 557, 695, 691, 690, 689, 688, 684, 683, 680, 721, 722, 680, 723, 546, 552, 697, 696, and 715 of village Faridpur, 167 of village Jadupur, 1387 and 1386 of village Parkul Gohailbari, 1836, 1837, 1842, 1841, 2259, 1827, 1818, 1817, 1815, 1803, 1805, 1800, 1799, 1798, 1797, 1789, 1783, 1784, 1785 and 1786 of village Paturia, 1153 and 1121 of village Gosain-Gobindapur, 87, 86, 64, 65, and 76 of village Char Durgapur, 293 and 294 of village Danga Hatimohon, 25, 27, 176, 179, 180 and 178 of village Mirzapur, 851 of village Gondardia, 2374 and 2369 of village Maslandapur and measuring, more or less, 3·773 acres, are likely to be required within the villages mentioned above in the district of Faridpur.

This notification is made, under the provisions of section 4 of Act, I of 1894, to all whom it may concern.

A plan of the land may be inspected in the office of the Special Land Acquisition Officer, Faridpur, as well as in that of the Chief Engineer, Eastern Bengal Railway, at No. 3, Koilaghat Street, Calcutta.

In exercise of the powers conferred by the aforesaid section, the Governor in Council is pleased to authorise the officers for the time

being engaged in the undertaking, with their servants and workmen, to enter upon and survey the land and do all other acts required or permitted by that section.

Any person interested in the above land, who has any objection to the acquisition thereof, may, within thirty days after the date on which public notice of the substance of this notification is given in the locality, file an objection in writing before the Collector of Faridpur.

Bogra.—No. 8643L.A.—13th July 1931.—Whereas it appears to the Govenor in Council that land is likely to be required to be taken by Government at the expense of the Bogra District Board for a public purpose, viz., for the Siladevi bathing ghat at Mahasthan, in the village of Mahasthangar, thana Shibganj, pargana Shelbarsha, zilla Bogra, it is hereby notified that for the above purpose a piece of land comprising cadastral survey plot Nos. 182, 183, 184, 185, 186, 187, 188 and 190 and measuring, more or less, 2·81 acres, is likely to be required within the aforesaid village of Mahasthangar.

This notification is made, under the provisions of section 4 of Act I of 1894, to all whom it may concern.

A plan of the land may be inspected in the office of the Collector of Bogra.

In exercise of the powers conferred by the aforesaid section, the Governor in Council is pleased to authorise the officers for the time being engaged in the undertaking, with their servants and workmen, to enter upon and survey the land and do all other acts required or permitted by that section.

Any person interested in the above land, who has any objection to the acquisition thereof, may, within thirty days after the date on which public notice of the substance of this notification is given in the locality, file an objection in writing before the Collector of Bogra.

Hooghly.—No. 8646L.A.—13th July 1931.—Whereas it appears to the Governor in Council that land is likely to be required to be taken by Government at the expense of the Bansberia Municipality for a public purpose, viz., for the construction of a charitable dispensary at Bansberia, in the village of Bansberia, jurisdiction list No. 51 thana Hooghly, pargana Arsa, district Hooghly, it is hereby notified that for the above purpose a piece of land comprising cadastral plot No. 599 and portion of plot No. 598 and measuring, more or less, 0·067 of an acre, is likely to be required within the aforesaid village of Bansberia.

This notification is made, under the provisions of section 4 of Act I of 1894, to all whom it may concern.

A plan of the land may be inspected in the office of the Collector of Hooghly.

In exercise of the powers conferred by the aforesaid section, the Governor in Council is pleased to authorise the officers for the time being engaged in the undertaking, with their servants and workmen, to enter upon and survey the land and do all other acts required or permitted by that section.

Any person interested in the above land, who has any objection to the acquisition thereof, may, within thirty days after the date on which public notice of the substance of this notification is given in the locality, file an objection in writing before the Collector of Hooghly.

Calcutta.—No. 8649L.A.—13th July 1931.—In exercise of the powers conferred by section 48 (*1*) of the Land Acquisition Act I of 1894, the Governor in Council is pleased to withdraw from the acquisition of a piece of land measuring, more or less, 1 bigha 4 cottahs of the standard measurement, equivalent to 0·3967 of an acre, being premises No. 26, Darpanarayan Tagore Street and bounded as described below, which was included in the area notified for acquisition under declaration No. 241L.A., dated the 7th January 1929, published at page 55, Part I of the *Calcutta Gazette* of the 10th idem and required by the Calcutta Improvement Trust for Scheme No. XXVI (Darpanarayan Tagore Street to Pathuriaghata Street) in ward No. V of the Calcutta Municipality—

Boundaries.

North and West—By premises No. 27, Darpanarayan Tagore Street.

East—By premises No. 24 and 25, Darpanarayan Tagore Street.

South—By Darpanarayan Tagore Street.

Burdwan. — No. 8686L.A. — 13th July 1931. — Whereas it appears to the Governor in Council that land is likely to be required to be taken by Government at the public expense for a public purpose, viz., for the feed and outfall channels of the syphon at chainage 20,134 feet (new) of the distributary No. 1, Branch Canal, Damodar Canal Project, in the village of Pilgram, jurisdiction list No. 141, thana Galsi, pargana Bagha, district Burdwan, it is hereby notified that for the above purpose two pieces of land comprising full settlement plots Nos. 671, 470 and 471, parts of settlement plots Nos. 432, 430, 429, 431, 449, 427, 450, 451, 574, 573, 643, 571, 459, 570, 567, 566, 565, 460, 461, 462, 463, 464, 466, 467, 468, 469, 533, 524, 472, 104, 473, 522, 503 and 502, and altogether measuring, more or less, 4·68 acres, are likely to be required within the aforesaid village of Pilgram.

This notification is made, under the provisions of section 4 of Act I of 1894, to all whom it may concern.

A plan of the land may be inspected in the office of the Special Land Acquisition Officer, Burdwan, as well as in that of the Executive Engineer, Damodar Canal Division, Burdwan.

In exercise of the powers conferred by the aforesaid section, the Governor in Council is pleased to authorise the officers for the time being engaged in the undertaking, with their servants and workmen, to enter upon and survey the land and do all other acts required or permitted by that section.

In exercise of the powers conferred by section 17 (*4*) of the Land Acquisition Act, I of 1894, as amended by Act XXXVIII of 1923, the Governor in Council is pleased to direct that the provisions of section 5A of the Act shall not apply in this case.

ERRATUM.

Midnapore.—No. 8658L.A.—13th July 1931. —In line 11 of notification No. 11614L.A., dated 23rd September 1930, under section 4 of the Land Acquisition Act, 1 of 1894, published at page 1568, Part I of the *Calcutta Gazette* of the 2nd October 1930, in respect of the proposed acquisition of land required for constructing a retired line in the 43rd and 44th mile of the Chetua Circuit Embankment, in the village of Sujanagar, pargana Chetua, district Midnapore, *for* "7·89 acres" *read* "8·31 acres."

DECLARATIONS.

Burdwan.—No. 8624L.A.—11th July 1931. —Whereas it appears to the Governor in Council that land is required to be taken by Government at the public expense for a public purpose, viz., for constructing road approaches to the bridge at chainage 18,100 feet of Distributary No. 6, Main Canal, Damodar Canal Project, in the village of Mirzapur, jurisdiction list No. 50, thana Burdwan, pargana Shahabad, district Burdwan, it is hereby declared that for the above purpose two pieces of land altogether measuring, more or less, 0·33 acre, bounded on the—

Block A:

North—By the lands of Shekh Aolad Mandal and Raja Mandal and others,
East—By the land of Shekh Aolad Mandal,
South—By the land of Irrigation Department,
West—By the lands of Raja Mandal and others, Shekh Aolad Mandal and Irrigation Department,

Block B:

North—By the land of Irrigation Department,
East—By the land of Shekh Aolad Mandal,
South and West—By the lands of Raja Mandal and others and Shekh Aolad Mandal,

are required within the aforesaid village of Mirzapur.

This declaration is made, under the provisions of section 6, Act I of 1894, to all whom it may concern.

A plan of the land may be inspected in the office of the Special Land Acquisition Officer, Burdwan, as well as in that of the Executive Engineer, Damodar Canal Division, Burdwan.

Burdwan.—No. 8634L.A.—13th July 1931. —Whereas it appears to the Governor in Council that land is required to be taken by Government at the public expense for a public purpose, viz., for constructing an approach channel of Distributary No. 1/c of the branch canal, Damodar Canal Project, in the village of Kanu, jurisdiction list No. 167, in thana Galsi, pargana Bagha, district Burdwan, it is hereby declared that for the above purpose a piece of land comprising parts of cadastral plots Nos. 3242, 3243 and 3248 and measuring, more or less, 0·31 of an acre, is required within the aforesaid village of Kanu.

Mines of coal, iron-stone, slate or other minerals lying under the land or any particular portion of the land, except only such parts of the mines and minerals as it may be necessary to dig, or carry away, or use, in the construction of the work for the purpose of which the land is being acquired are not needed.

This declaration is made, under the provisions of section 6 of Act I of 1894, to all whom it may concern.

A plan of the land may be inspected in the office of the Special Land Acquisition Deputy Collector, Burdwan, as well as in that of the Executive Engineer, Damodar Canal Division, Burdwan.

Pabna.—No. 8640L.A.—13th July 1931.—Whereas it appears to the Governor in Council that land is required to be taken by Government at the expense of the District Board, Pabna, for a public purpose, viz., for the Boyra-Supgacha Diversion Road, in the villages of Belta, Atharatakarpara, Bhatpiari, Kechuaata, and Kharua, jurisdiction list Nos. 148, 147, 114, 118 and 119, respectively, thana Sirajganj, parganas, Barabaju and Kagmari, zilla Pabna, it is hereby declared that for the above purpose a piece of land comprising parts of cadastral plots Nos. 86, 87, 116, 122, 123, 124, 125, 126, 131, 134, 135, 142, 144, 145, 179, 180, 181, 219, 239, 240, 241, 242, 243, 246, 248, 249, 251, 252, 274, 275, 276, 277, 278, 626, 632, 634, 635, 639, 640, 641, 642, 666, 667, 668, 669 of village Belta, 231, 232, 584, 585, 588, 589, 590, 610, 611, 612, 613, 614, 615, 616, 618 of village Atharatakarpara, 562, 580, 581, 584, 586, 591, 600, 603, 604, 618, 619, 620, 622, 623, 624, 625, 626, 644, 645, 656, 661, 664, 665, 666, 667, 671, 678, 679, 680, 697, 700, 2149, 2237, 2238, 2242, 2243, 2244, 2245, 2307, 2313, 2328, 2329, 2330, 2331, 2334, 2335, 2358, 2360, 2361, 2362, 2365, 2366, 2367, 2368, 2506, 2507, 2512, 2513, 2514, 2515, 2538, 2543, 2544 of village Bhatpiari, 16, 82, 83, 84, 85, 121, 122, 123, 124, 125, 175, 176, 177, 178, 179 184, 185, 190, 191, 192, 206, 208, 213, 214, 217, 218, 221, 222, 223, 336, 337, 342, 343, 344, 346, 357, 358, 359, 360, 466, 467, 468, 472, 473, 482, 483, 488, 489 of village Kechuaata, 815, 817, 818, 819, 820, 830, 831 of village Kharua and measuring, more or less, 9·45 acres, is required within the aforesaid villages of Belta, Atharatakarpara, Bhatpiari, Kechuaata and Kharua.

This declaration is made, under the provisions of section 6 of Act I of 1894, to all whom it may concern.

A plan of the land may be inspected in the office of the Subdivisional Officer, Serajganj.

24-Parganas. — No. 8652L.A. — 13th July 1931.—Whereas it appears to the Governor in Council that land is required to be taken by Government at the public expense for a public purpose, viz., for extension of Horse loading platform of the Eastern Bengal Railway at Barrackpore Race Course, in the village of Barrackpore Cantonment, jurisdiction list No. 6, thana Barrackpore, pargana Calcutta, zilla 24-Parganas, it is hereby declared that

for the above purpose a piece of land measuring, more or less, 0·1492 of an acre, bounded on the—

North and West—By the land of the Calcutta Turf Club,

East and South—By the land of the Eastern Bengal Railway,

is required within the aforesaid village of Barrackpore Cantonment.

This declaration is made, under the provision of section 6 of Act I of 1894, to all whom it may concern.

A plan of the land may be inspected in the office of the Chief Engineer, Eastern Bengal Railway, as well as in the office of the Special Land Acquisition Officer at Alipore, 24-Parganas.

Midnapore.—No. 8655L.A.—13th July 1931. —Whereas it appears to the Governor in Council that land is required to be taken by Government at the public expense for a public purpose, viz., for the construction of a retired line in the 43rd and 44th mile of the Chetua Circuit Embankment, in the village of Sujanagar, Pargana Chetua, zilla Midnapore, it is hereby declared that for the above purpose a piece of land measuring, more or less, 8·31 acres, comprised in entire settlement plots Nos. 102, 103, 113, 114, 115, 116, 117, 118, 119, 120, 125, 133, 134, 135, 138, 139, 141 and 1118 and portions of settlement plots Nos. 121, 104, 105, 106, 107, 109, 110, 111, 112, 150 and 129, is required within the aforesaid village of Sujanagar.

This declaration is made, under the provisions of section 6 of Act I of 1894, to all whom it may concern.

A plan of the land may be inspected in the office of the Subdivisional Officer, Ghatal.

Forests.

ERRATUM.

Jalpaiguri Divn.—No. 8514For.—9th July 1931.—In lines 2-3 of Government notification No. 14382For., dated the 5th December 1930, posting Mr. V. S. Rao of the Indian Forest Service to the Jalpaiguri Division, as an attached officer, *substitute* the words "Assistant Conservator of Forests," *for* the words "Indian Forest Service Probationer."

Miscellaneous.

NOTIFICATIONS.

Calcutta.—No. 8465Misc.—8th July 1931.—Rai Jitendra Nath Sircar Bahadur, Assistant Secretary to the Government of Bengal in the Revenue Department, is granted leave on average pay for fifteen days, with effect from the 29th June 1931.

Calcutta.—No. 8470Misc. — 8th July 1931. —Babu Jnanendra Nath Sen, Head Assistant, Bengal Secretariat, Revenue Department, is appointed to officiate as Assistant Secretary to Government in that department, with effect from the 29th June 1931, during the absence, on leave, of Rai Jitendra Nath Sircar Bahadur, the permanent incumbent, or until further orders.

H. C. V. PHILPOT,
Secy. to the Govt. of Bengal.

IRRIGATION DEPARTMENT.

Establishment.

NOTIFICATION.

No. 17.—11th July 1931.—Mr. E. A. Moore, Assistant Executive Engineer, is, on return from leave, posted to the Dredger Division.

H. C. V. PHILPOT,
Secy. to the Govt. of Bengal.

Orders by the Conservator of Forests, Northern Circle, Bengal.

Buxa.—No. 4489For. — 7th July 1931 — Babu Surendra Kumar Datta, Extra Assistant Conservator of Forests, in charge Kumargramduar subdivision, Buxa Division, is granted leave on average pay for one month and fifteen days, under rule 81 (*b*) (*ii*) of the Fundamental Rules, with effect from the 21st May 1931.

A. K. GLASSON,
Conservator of Forests,
Northern Circle, Bengal (offg.).

TREASURY NOTICE.

Orders by the Deputy Accountant-General, Bengal.

The Treasury, 4th July 1931.

It is notified that the refund order book No. 498 containing 50 orders is in use by the Income-Tax Officer, Central Salaries Circle, Calcutta, with effect from 26th June 1931.

K. R. RAMA AYYAR,
Dy. Accountant-General, Bengal.

SHERIFF'S OFFICE, THE 16TH JULY 1931.

Notice is hereby given that the Fourth Criminal Sessions of the year 1931 of the High Court of Judicature at Fort William in Bengal for the town of Calcutta and Factory of Fort William and the places subordinate thereto, will be held at the Court House, in the town of Calcutta, on Monday, the 3rd day of August next, at 11 o'clock in the forenoon, and thenceforward from day to day until the said sessions be over. And it is hereby proclaimed that all persons who are to prosecute any of the prisoners to be brought up for trial at the said sessions be present then and there to prosecute.

P. N. TAGORE, *Sheriff.*

সরিফ আফিস, সন ১৯৩১ সাল, তারিখ ১৬ই জুলাই।

সকলকে সমাচার দেওয়া যাইতেছে যে সুবে বাঙ্গালার ফোর্ট উইলিয়ম দুর্গের অধীন সহর কলিকাতার ও অন্যান্য স্থানের ফৌজদারী বিচার নিষ্পত্তি জন্য আগামী সন ১৯৩১ সালের ৩রা আগাষ্ট, সোমবার বেলা ১১ ঘটিকার সময় এবং যে পর্য্যন্ত সেশিয়ানের কার্য্য শেষ না হয় প্রতিদিন উক্ত সময়ে কলিকাতার হাইকোর্টের আপন আদালত ঘরে সন ১৯৩১ সালের চতুর্থ ক্রিমিনেল সেশিয়ান বসিবেক এবং এতদ্বারা প্রচার করা যাইতেছে যে, যে সকল ব্যক্তি কোন কয়েদির বিরুদ্ধে ফৌজদারী মিছিল করিবেক তাহারা উক্ত স্থানে উক্ত সময়ে হাজির থাকিয়া মোকদ্দমা করে, ইতি।

পি, এন, ঠাকুর,
সরিফ।

HIGH COURT NOTICES.

English Department—Civil.

The 10th July 1931.

No. 9078G.—Mr. F. B. Counsell, Deputy Registrar, High Court, Appellate Side, is allowed, under the proviso to rule 81 (*b*) (*ii*) of the Fundamental Rules, leave on average pay out of Asia for a period of eight months as follows:—

(*a*) from the 31st July 1931, or such other date as he may avail himself of the leave, to the 10th September 1931 (with permission to take the ensuing High Court vacation commencing on the 11th September and ending on the 21st November 1931); and (*b*) from the 22nd November 1931 to the 30th March 1932, inclusive, and, under rule 81 (*d*) of the Fundamental Rules, leave on half average pay from the 31st March 1932 to the 9th June 1932.

(1) Mr. Badr-ud-Din Ahmad, B.A., Assistant Registrar, English Office, Appellate Side, is appointed to act as Deputy Registrar, Appellate Side, during the periods of Mr. Counsell's leave;

(2) Mr. J. J. Young, Assistant Registrar, Paper Book and Accounts Departments, Appellate Side, is appointed to act as Assistant Registrar, English Office, *vice* Mr. Badr-ud-Din Ahmad; and

(3) Mr. Anukul Chandra Basu, Senior Editor, Paper Book Department, is appointed to act as Assistant Registrar, Paper Book and Accounts Department, *vice* Mr. J. J. Young.

Civil.

The 8th July 1931.

No. 8884A.—Babu Kalyan Kumar Das Gupta, munsif, under orders of transfer to Jhargram, in the district of Midnapore, is vested with the powers of a Judge of a Court of Small Causes for the trial of suits cognizable by such a Court up to the value of Rs. 50 within the local limits of the Jhargram munsifi.

By order of the High Court,

W. McC. Sharpe, *Registrar.*

Original Side.

Calcutta, the 6th July 1931.

The Hon'ble the Chief Justice has been pleased to grant Mr. Jatindra Nath De, Assistant Registrar, High Court, Original Side, leave on average pay for twelve days, under Fundamental Rules 81 (*b*) (*ii*) and 82 (*b*), with effect from the 15th June 1931.

Calcutta, the 8th July 1931.

The Hon'ble the Chief Justice has granted Mr. S. N. Roy, Assistant Referee, High Court, Original Side, leave for two months and ten days, with effect from the 22nd June 1931, viz., privilege leave on full pay for six days, under article 274, Civil Service Regulations, and privilege leave on half pay for the remaining period, under article 271, Civil Service Regulations, and has made the following acting appointments as from the 30th June 1931:—

Mr. J. M. Ghose, Assistant Registrar (Rs. 400—600), *vice* Mr. S. N. Roy.

Mr. D. Basu, Bar.-at-Law (now acting as Assistant Registrar), *vice* Mr. J. M. Ghose.

In supersession of the notification, dated 25th March 1931, published in the *Calcutta Gazette*, dated 2nd April 1931, page 416, the Hon'ble the Chief Justice has appointed Mr. O. U. Ahmad, Bar.-at-Law, to act for Mr. S. N. Banerjee, Assistant Registrar, as from the 30th June 1931 to 31st August 1931, and Mr. D. Basu, Bar.-at-Law, to act for Mr. S. N. Banerjee from the 1st to 10th September 1931

By order,

Maurice Rempry, *Registrar.*

Bar Council Election.

The 10th July 1931.

In continuation of the notification, dated the 20th May 1931, and published in the *Calcutta Gazette* of 28th May 1931, the undersigned hereby gives notice that the second election of members of the Bar Council for the High Court of Calcutta has been adjourned till Friday, the 31st July 1931, between the hours of 2 and 5 p.m. at the Court House at the Calcutta High Court.

The time for proposing candidates for election to the Bar Council has been extended till the 16th July 1931.

S. K. Dutt,
for Secy., Calcutta Bar Council.

ORDERS BY COMMISSIONERS OF DIVISIONS.

Burdwan Division—Chinsura.

No. 1320L.S.-G.—6th July 1931.—It is hereby notified for general information that, under rule 20 (*b*) read with rule 23 of the rules for the management of charitable hospitals and dispensaries in Bengal, Babus Jagabandhu Pal and Hari Prosad Bose have been

appointed to be members of the committee for the management of the charitable dispensary at Bolpur in the district of Birbhum, in place of Babu Dwarka Nath Mukherji and the Circle Officer, Bolpur, resigned.

No. 992M.—8th July 1931.—It is hereby notified for general information that the next general election of Commissioners of the Raniganj Municipality in the district of Burdwan will be held on Saturday, the 27th February 1932.

No. 2055J.G. — 10th July 1931. — Maulvi Abul Khair Quazi Makim-ud-din Ahmad, Sub-Deputy Collector and Sub-Deputy Magistrate, on probation, Burdwan, is transferred to the district of Midnapore for employment as Circle Officer, Pingla, *vice* Babu Asit Kumar Biswas.

This cancels the orders of the 4th July 1931, transferring him to the Contai subdivision as Circle Officer, Bhagwampur.

No. 2062J.G.—10th July 1931. — Maulvi Shamsul Abedin, Sub-Deputy Collector and Sub-Deputy Magistrate, posted to this division under Government notification No. 5440A., dated the 6th July 1931, is posted temporarily to the headquarters station of the Howrah district on general duty.

No. 2067J.G.—10th July 1931.—The orders of the 2nd July 1931, posting Maulvi Ibrahim Ali Khan, Sub-Deputy Collector, on leave, to the district of Midnapore for employment as Circle Officer, Pingla, are cancelled.

L. B. BURROWS, *Commissioner (offg.)*.

Bankura, the 7th July 1931.

Erratum.—No. 3217J.—In notification No. 2929J. (*b*), dated the 16th June 1931, published at page 757 of Part I of the *Calcutta Gazette* of the 25th June 1931, regarding the constitution of the Birsingha union board in police-station Patrasayer in the Vishnupur subdivision of the district of Bankura, *for* "Bhola Taran Singha" *read* "Bhaba Taran Singha."

Bankura, the 9th July 1931.

No. 2933J.—It is hereby notified for general information that—

(*a*) Under sub-section (*2*) of section 6 of the Bengal Village Self-Government Act, 1919 (Bengal Act V of 1919), the following gentlemen have been duly elected to be members of the undermentioned union boards in police-station Chhatna in the Sadar subdivision of the district of Bankura:—

Union No. III—Arra.

Ward No. I.

Babu Trilochan Banerjea.

Ward No. II.

Babu Manindra Nath Halder.

Ward No. III.

Babu Rajib Lochan Mandal.

Ward No. IV.

Babu Chandra Nath Senapati.

Ward No. V.

Babu Abinash Chandra Mandal.

Ward No. VI.

Babu Ashu Tosh Goswami.

Union No. X—Chhatna.

Ward No. I.

Babu Gati Gobinda Goswami.

Ward No. II.

Babu Kashi Nath Bakshi.

Ward No. III.

Babu Ram Gopal Deghoria.

Ward No. IV.

Babu Sarat Chandra Bandopadhya.

Ward No. V.

Babu Nagendra Nath Bakshi.
Babu Joyram De.

(*b*) Under sub-section (*3*) of section 6 of the Act the following gentlemen have been appointed to be members of the said union boards:—

Union No. III—Arra.

Babu Anath Bandhu Desmukh.
Babu Ram Kinkar Mukhopadhya.
Maulvi Sheikh Abdul Gafoor.

Union No. X—Chhatna.

Babu Surendra Nath Sen.
Sheikh Abdul Razzak.
Sheikh Etbar Khan.

No. 2935J.—It is hereby notified for general information that—

(*a*) Under sub-section (*2*) of section 6 of the Bengal Village Self-Government Act, 1919 (Bengal Act V of 1919), the following gentlemen have been duly elected to be members of the Barasal union board in police-station Gangajalghati in the Sadar subdivision of the district of Bankura:—

Ward No. I.

Babu Ram Ranjan Kundu.
Babu Hitlal Ray.

Ward No. II.

Babu Jugal Kishore Mandal.
Babu Bhola Nath Mandal.

Ward No. III.

Babu Sarbeswar Mandal.

Ward No. IV.

Babu Uday Chandra Mandal.

(*b*) Under sub-section (*3*) of section 6 of the Act the following gentlemen have been appointed to be members of the said union board:—

Babu Hem Chandra Tewari.
Babu Atul Chandra Majumdar.
Babu Nil Madhab Majhi.

No. 2937J.—It is hereby notified for general information that—

(*a*) Under sub-section (*2*) of section 6 of the Bengal Village Self-Government Act, 1919 (Bengal Act V of 1919), the following gentlemen have been duly elected to be members of the Mejia union board in police-station Mejia in the Sadar subdivision of the district of Bankura:—

Ward No. I.

Babu Bhuban Mohan Datta.

Ward No. II.

Babu Amulya Ratan Pal.
Babu Subodh Chandra Topadar.

Ward No. III.

Babu Magaram Tewari.
Babu Sashi Bhusan Dubey.
Babu Mahendra Nath De

(*b*) Under sub-section (*3*) of section 6 of the Act the following gentlemen have been appointed to be members of the said union board:—

Babu Rakhal Chandra Ghosh.
Babu Rajani Kanta Roy.
Babu Debi Nath Tewari.

No. 2939J.—It is hereby notified for general information that—

(*a*) Under sub-section (*2*) of section 6 of the Bengal Village Self-Government Act, 1919 (Bengal Act V of 1919), the following gentlemen have been duly elected to be members of the Salma union board in police-station Saltora in the Sadar subdivision of the district of Bankura:—

Ward No. I.

Babu Ram Bishnu Majhi

Ward No. II.

Babu Kali Pada Sen Gupta

Ward No. III.

Babu Hari Pada Choudhury.

Ward No. IV.

Babu Sashi Sekhar Sarkar.

Ward No. V.

Babu Behari Nath Pal.

Ward No. VI

Babu Jotish Chandra Khan.

(*b*) Under sub-section (*3*) of section 6 of the Act the following gentlemen have been appointed to be members of the said union board:—

Babu Nalinakshya Sen Gupta.
Babu Umesh Chandra Chakraborty.
Babu Hrishikesh Banerjee.

No. 2942J.—It is hereby notified for general information that—

(*a*) Under sub-section (*2*) of section 6 of the Bengal Village Self-Government Act, 1919 (Bengal Act V of 1919), the following gentlemen have been duly elected to be members of the Ajodhya union board in police-station Vishnupur in the Vishnupur subdivision of the district of Bankura:—

Ward No. I.

Babu Ashu Tosh Chattopadhya.

Ward No. II.

Dr. Chandra Bhusan Banerjee.
Babu Mahi Tosh Mukhopadhya.

Ward No. III.

Babu Ashu Tosh Bandopadhya.

Ward No. IV.

Babu Arun Chandra Goswami.

Ward No. V.

Babu Shyama Charan Ghosal.

(*b*) Under sub-section (*3*) of section 6 of the Act the following gentlemen have been appointed to be members of the said union board:—

Babu Kishori Mohan Tewari.
Babu Bhusan Chandra De.
Babu Kedar Nath Misra.

No. 2944J.—It is hereby notified for general information that—

(*a*) Under sub-section (*2*) of section 6 of the Bengal Village Self-Government Act, 1919 (Bengal Act V of 1919), the following gentlemen have been duly elected to be members of the undermentioned union boards in the police-station Sonamukhi in the Vishnupur subdivision of the district of Bankura:—

Union No. IV—Hamirhati.

Ward No. I.

Babu Dhan Krishna Kuar.

Ward No. II.

Babu Bagala Prasad Bhattacharjee.

Ward No. III.

Babu Bibhuti Bhusan Singha.
Babu Chandra Mohan Singha.

Ward No. IV.

Babu Sagar Layek.

Ward No. V.

Babu Satish Chandra Kundu.

Union No. IX—Nabasan.

Ward No. I.

Babu Satish Chandra Banerjee.

Ward No. II.

Babu Surendra Dwari.

Ward No. III.

Babu Nitya Kali Choudhury.

Ward No. IV.

Babu Rampada Gayen.

Ward No. V.

Babu Nalinakshya Laik.

Ward No. VI.

Babu Kamini Kumar Biswas.

(*b*) Under sub-section (*3*) of section 6 of the Act the following gentlemen have been appointed to be members of the said union boards:—

Union No. IV—Hamirhati.

Babu Sarat Chandra Mukherjee
Babu Nagendra Nath Chakrabarty.
Babu Hrishikesh Pal.

Union No. IX—Nabasan.

Babu Sashi Bhusan Ray.
Babu Bibhuti Bhusan Choudhury.
Munshi Sheikh Mafijuddin.

No 2946J.—It is hereby notified for general information that—

(*a*) Under sub-section (*2*) of section 6 of the Bengal Village Self-Government Act, 1919 (Bengal Act V of 1919), the following gentlemen have been duly elected to be members of the Patrasayer union board in police-station Patrasayer in the Vishnupur subdivision of the district of Bankura:—

Ward No. I.

Munshi Sheikh Erfan Ali.

Ward No. II.

Babu Charu Chandra Chatterjee.
Babu Surendra Nath Kundu.

Ward No. III.

Babu Dhirendra Nath Hazra.
Babu Ram Satya Ghosal.
Babu Radha Gobinda Mukherjee.

(*b*) Under sub-section (*3*) of section 6 of the Act the following gentlemen have been appointed to be members of the said union board:—

Babu Upendra Nath Hazra.
Babu Ram Sankar De.
Babu Satish Chandra Dan.

J. M. BANERJEA, *District Magistrate.*

Birbhum, the 10th July 1931.

No. 5L.S.-G.—It is hereby notified for general information that, under section 13 of the Bengal Village Self-Government Act, 1919 (Bengal Act V of 1919), read with rule 36 of the rules for the election and appointment of members of union board, etc., Abdul Sattar Molla has been appointed by me to be a member of the Suppur union board in police-station Bolpur in the Sadar subdivision of the district of Birbhum, *vice* Molla Muhammad Abu Taiyab, deceased.

G. S. DUTT, *District Magistrate.*

Burdwan, the 10th July 1931.

It is hereby notified for general information that, under section 13 of the Bengal Village Self-Government Act, 1919 (Bengal Act V of 1919), read with rule 35 of the rules for the election and appointment of members of union board, Maulvi Abdul Zabber has been duly elected to be a member of Ward No. I of the Palita union board in police-station Ketugram in the Katwa subdivision of the district of Burdwan, *vice* Syed Mahammad Sadullah, resigned.

It is hereby notified for general information that, under section 13 of the Bengal Village Self-Government Act, 1919 (Bengal Act V of 1919), read with rule 35 of the rules for the election and appointment of members of union board, Babu Ramendra Narayan Ghosh has been duly elected to be a member of Ward No. III of the Pandugram union board in police-station Ketugram in the Katwa subdivision of the district of Burdwan, *vice* Babu Jnanendra Narayan Ghosh, deceased.

It is hereby notified for general information that, under section 13 of the Bengal Village-Self-Government Act, 1919 (Bengal Act V of 1919), read with rule 35 of the rules for the election and appointment of members of union board, Babu Jatindra Nath Bakshi has been duly elected to be a member of Ward No. I of the Karajgram union board in police-station Katwa in the Katwa subdivision of the district of Burdwan, *vice* Babu Surendra Nath Banerji, deceased.

H. C. BOSE, *District Magistrate (offg.).*

Chittagong Division—Chittagong.

No. 2487G.—2nd July 1931.—Maulvi Muhammad Ahad Ali Khan, Sub-Deputy Collector, on probation, who has been posted to this division in Government notification No. 1078A.D., dated the 11th June 1931, is posted to the headquarters station of the Chittagong district.

Erratum.—No. 2590G.—8th July 1931.—In erratum No. 1565G., dated the 21st April 1931, published at pages 545-546, Part I of the *Calcutta Gazette* of the 7th May 1931, at page 546 under Chhagalnaya dispensary *for* "Maulvi Sultan Bazed" *read* "Maulvi Abul Basor."

W. H. NELSON, *Commissioner.*

Dacca Division—Dacca.

No. 3523J.—6th July 1931.—It is hereby notified for general information that—

(*a*) Under sub-section (*2*) of section 6 of the Bengal Village Self-Government Act, 1919 (Bengal Act V of 1919), the following gentlemen have been duly elected to be members of the Ishan-Gopalpur union board in police-station Kotwali in the Sadar subdivision of the Faridpur district:—

Babu Indu Bhusan Sarkar.
Babu Jogendra Sarkar.
Maulvi Kedan Biswas.
Babu Anukul Chandra Saha.
Mazzam Ali Chaudhuri.
Maulvi Sonaulla Biswas.

(*b*) Under sub-section (*3*) of section 6 of the Act, the following gentlemen have been appointed by the District Magistrate of Faridpur to be members of the said union board:—

Babu Prasanna Kumar Sarcar
Wazaddin Munshi
Fazel Molla.

No. 3528J.—7th July 1931.—It is hereby notified for general information that in exercise of the powers delegated to me by the Bengal Government notification No. 3403L.S.-G., of the 1st December 1904, I do hereby sanction, under section 6 (*c*) of the Bengal Ferries Act, I of 1885, the establishment of three new public ferries over three khals at Simulia on the 10th mile of the district board road from Kodda to Simulia in the Sadar (North) subdivision of the Dacca district

2. In exercise of the powers delegated to me by the Bengal Government notification No. 2141L.S.-G., dated the 20th July 1920, I direct, under section 35 of the aforesaid Act, as amended by section 2 read with Schedule I of the Bengal Village Self-Government Act, V of 1919, that the said ferries shall be managed by the district board of Dacca and the proceeds of the ferries and all fines levied and compensation received under the said Act, in respect thereof, shall be paid into the District Fund of Dacca with effect from the date of this notification.

No. 3606J.—11th July 1931.—Babu Charupada Ray, Sub-Deputy Collector, who has been transferred to the Dacca Division in Government notification No. 5443A., dated the 6th July 1931, is posted to the headquarters station of the district of Faridpur on general duty.

No. 3612J.—11th July 1931.—Babu Kshitish Chandra Barman, Sub-Deputy Collector, who has been transferred to the Dacca Division in Government notification No. 5443A., dated the 6th July 1931, is posted to the headquarters station of the district of Bakarganj on general duty.

No. 3618J.—11th July 1931.—Maulvi Muhammad Ershad, Sub-Deputy Collector, who has been transferred to the Dacca Division in Government notification No. 5443A., dated the 6th July 1931, is posted to the headquarters station of the district of Mymensingh on general duty.

No. 3641J.—11th July 1931.—Babu Manoranjan Chaudhuri, Sub-Deputy Collector, Jamalpur, in the district of Mymensingh, is appointed to be Circle Officer of Jamalpur Circle in that district.

No. 3645J.—11th July 1931.—Babu Himangsu Jyoti Mazumdar, Sub-Deputy Collector and Circle Officer, Jamalpur, in the district of Mymensingh, is transferred to the headquarters station of that district on general duty.

A. CASSELLS, *Commissioner (offg.)*.

Mymensingh, the 7th July 1931.

It is notified for general information that the undersigned has approved of the constitution of the managing committee of the Mymensingh Vidyamayee High School for girls as noted below for three years, with effect from the 1st July 1931:—

The District Magistrate—President.
Head Mistress—Vice-President and Secretary.
An elected representative of the teaching staff other than the Head Mistress—Miss Sufala Ray, M.A.
Two non-official representatives of the parents and guardians of pupils—Babu Manaranjan Banerjee and Rai Bahadur Umesh Chandra Chakladar.
A European or Indian lady interested in female education—Mrs. Prativa Nag, B.A.
One Muhammadan representing the local Muhammadan community—Khan Sahib Sarafuddin Ahmed.
One Christian to represent the local Christian community—Miss J. R. Hogben.
Two Hindus representing the local Hindu community—Babu Akshoy Kumar Majumdar, Pleader, and Babu Surendra Nath Sen, Zamindar.

H. GRAHAM, *District Magistrate*.

Presidency Division—Calcutta.

No. 1247M.—4th July 1931.—It is hereby notified for general information that the by-election in Ward No. IV of the Jaynagar Municipality in the district of the 24-Parganas to fill up the vacancy caused by the resignation of Babu Dhirendra Nath Nandi fixed for the 4th July 1931, in this office notification No. 974-M., dated the 2nd June 1931, published at page 679, Part I of the *Calcutta Gazette* of the 11th June 1931, has been postponed to Saturday, the 29th August 1931.

No. 487J.G.—6th July 1931.—It is hereby notified for general information that in exercise of the powers conferred on me by rule 63 (*2*) of the revised rules under the Bengal Jail Code, I appoint Dr. Zahooral Huq to be a non-official visitor of the Basirhat Sub-Jail in the district of the 24 Parganas for a term of two years with effect from the date of this notification.

No. 1155R.G.—6th July 1931.—Babu Dhirendra Nath Banerji, Sub-Deputy Collector and Circle Officer, Bongaon, Jessore, has been granted leave on average pay for twenty-four days, under rule 81 (*b*) (*ii*) of the Fundamental Rules, with effect from the 30th May 1931.

No 1160R.G.—7th July 1931.—Babu Ashutosh Banerjee, Sub-Deputy Collector, Sadar, Nadia, has been granted leave on average pay for ten days, under rule 81 (*b*) (*ii*) of the Fundamental Rules, with effect from the 15th June 1931.

No. 1271M.—8th July 1931.—It is hereby notified for general information that as the election of the Commissioners of Ward No. I of the Barasat Municipality in the district of the 24-Parganas, held on the 14th March 1931, has been declared null and void by the District Magistrate under rule 40 of the Bengal Municipal Election Rules, Saturday, the 15th August 1931, is fixed as the date for holding a fresh election of the Commissioners for that ward.

No. 1170R.G.—9th July 1931.—Babu Nutbihari Chatarji, Sub-Deputy Collector, on leave, is temporarily posted to the Sadar station of the district of the 24-Parganas.

F. W. ROBERTSON, *Commissioner (offg.)*.

Bengal Chamber of Commerce Constituency of the Bengal Legislative Council.

Calcutta, the 16th July 1931.

Notice is hereby given, under the provisions of No. 19 (*5*) of the Bengal Electoral Rules, that the returns of election expenses and declarations made in respect thereof with regard to their candidature for election as representatives of the Bengal Chamber of Commerce Constituency of the Bengal Legislative Council, were duly lodged with me by Messrs. E. C. Benthall and Henry Birkmyre. The returns and declarations may, on payment of a fee of one rupee, be inspected on application to me at my office between the hours of 11 a.m. and 4 p.m. for one week from date.

D. K. CUNNISON, *Returning Officer*.

Rajshahi Division—Jalpaiguri.

No. 2570J.—11th July 1931.—Under the provisions of rule 63 (*2*) of Chapter IV of the Bengal Jail Code, I appoint the following gentlemen as members of Rangpur District and Subsidiary Jails for a period of two years:—

Rangpur District Jail.

Chairman, Rangpur District Board.
Babu Jogesh Chandra Sarkar, B.L.

Kurigram Sub-Jail.

Rai Sahib Jogesh Chandra Ray.
Babu Rajendra Ram Bakshi.

Gaibandha Sub-Jail.

Khan Bahadur Maulvi Md. Abdul Majid.
Babu Rabi Lochan Mazumdar.

Nilphamari Sub-Jail.

Maulvi Jasimuddin Choudhury.
Babu Hara Nath Biswas.

No. 2574J.—11th July 1931.—Under the provisions of rule 63 (*2*) of Chapter IV of the Bengal Jail Code, I appoint the gentleman named below to be a non-official visitor of the Darjeeling Jail for a period of two years:—

Sardar Bahadur S. W. Laden La, C.B.E.

J. G. DRUMMOND, *Commssioner (offg.)*.

Rangpur, the 2nd July 1931.

No. 3825J.—It is hereby notified for general information that, under section 13 of the Bengal Village Self-Government Act, 1919 (Bengal Act V of 1919), Babu Ram Kanai Sarker has been duly elected to be a member of Uria union board in police-station Fulchari in Gaibandha subdivision of Rangpur district, *vice* Babu Joydhan Barma Sarker, deceased.

Rangpur, the 10th July 1931.

No. 3988J.—It is hereby notified for general information that, under section 13 of the Bengal Village Self-Government Act, 1919 (Bengal Act V of 1919), Munshi Azizar Rahaman Sarkar has been duly elected to be a member of Khaga Kharibari union board in police-station Dimla in the Nilphamari subdivision of the district of Rangpur, *vice* Munshi Nabiuddin Sarkar, deceased.

T. M. DOW, *District Magistrate*.

Pabna, the 9th July 1931.

It is hereby notified for general information that, under section 13 of the Bengal Village Self-Government Act (Act V of 1919), Dr. Abdul Zalil Shaikh of Samanyapara has been duly elected to be a member of the Khetupara union board in police-station Santhia within the Sadar subdivision of the Pabna district, *vice* Munshi Ayenuddin Ahmed, deceased.

It is hereby notified for general information that, under section 13 of the Bengal Village Self-Government Act (Act V of 1919), Babu Sudhir Kumar Chaudhury has been duly appointed by the District Magistrate of Pabna to be a member of the Muladuli union board in Sara police-station within the Sadar subdivision of the Pabna district, *vice* Babu Prasanna Kumar Chaudhury, deceased.

It is hereby notified for general information that, under section 13 of the Bengal Village Self-Government Act (Act V of 1919), Munshi Tusta Pramanik has been duly appointed by the District Magistrate of Pabna to be a member of the Muladuli union board in Sara police-station within the Sadar subdivision of the Pabna district, *vice* Babu Sarat Chandra Sarkar, deceased.

[ILLEGIBLE], for *Magistrate*.

Dinajpur, the 10th July 1931.

No. 4051J.—It is hereby notified for general information that, under section 13 of the Bengal Village Self-Government Act, 1919 (Bengal Act V of 1919), Babu Hemanta Kumar Das of Chitri has been duly appointed by the District Magistrate of Dinajpur to be a member of the district of Dinajpur, *vice* Babu Bhupal police-station Itahar in the Sadar subdivision of the Durgapur union board No. II in the Chandra Roy Choudhury of Durgapur, resigned.

L. C. GUHA, *District Magistrate*.

The Calcutta Gazette

THURSDAY, JULY 16, 1931.

Part IA

Orders and Notifications by the Government of India republished for general information.

HOME DEPARTMENT.

NOTIFICATIONS.

ESTABLISHMENTS.

Simla, the 2nd July 1931.

No. F. 34/7/30.—In exercise of the power conferred by sub-regulation (2) of regulation 6 of the regulations included in Schedule IV to the Superior Civil Services Rules, the Governor-General in Council is pleased to direct that the following further amendment shall be made in the Notification of the Government of India in the Home Department No. F. 178-12-IV-24-Ests., dated the 17th January 1925, namely:—

(1) In the preamble to the said notification—

(*a*) for the words "specify the following benefits as" the words "direct that" shall be substituted;

(*b*) after the word "children" the words "shall be determined in accordance with the following provisions" shall be inserted.

(2) In clause (*a*) in the said notification—

(*a*) after the words and figures "the 14th day of February 1925" the words "the maximum benefits admissible shall be" shall be inserted;

(*b*) in sub-clause (*iii*) for the words "for each child one single passage; and" the words "for each child one single passage." shall be substituted.

(3) In clause (*b*) in the said notification after the words "the first day of April 1924" where they first occur the words "the maximum benefits admissible shall be" shall be inserted.

(4) For clause (*c*) of the said notification the following clause shall be substituted, namely:—

"(*c*) In the case of a military officer transferred to permanent civil employ on or after the fourteenth day of February 1925, the benefits admissible shall be determined as follows:—

(*i*) If a passage account has been opened for such officer under Military Passage Regulations, he shall be entitled to the balance standing to his credit and to the credit of his wife or children, if any, in that account on the date of his transfer to civil employ.

(*ii*) If no such account has been opened he shall be entitled to the cost of such number of passages for himself, and for his wife and children, if any, as would have been credited if such account had been opened on the applicable date, subject to the deduction of the cost of any passage which may have been consumed by himself, his wife or his children under Military Passage Regulations prior to his transfer.

(*iii*) The applicable date for the purposes of sub-clause (*ii*) shall be the 14th day of February 1925 in the case of an officer appointed to military service before that date, and in any other case shall be the date of the officer's appointment to such service.

(*iv*) If such officer marries after his transfer to civil employ the benefits admissible in respect of his wife shall, subject to clause (*d*), be determined in accordance with the scale set out in the proviso to sub-clause (*ii*) of clause (*a*), and if a child is born to such officer after such transfer the benefits admissible in respect of such child shall be one single passage."

2. The Governor-General in Council is further pleased to direct that the said clause (*c*) shall have effect and be deemed always to have had effect as if it had been made as so amended.

H. W. EMERSON,
Secy. to the Govt. of India.

JUDICIAL.

The 27th June 1931.

No. F. 1073/30.—His Majesty's Secretary of State for India has permitted the Hon'ble Mr. Justice A. H. Cuming, Kt., I.C.S., to resign the office of Judge of the High Court of Judicature at Fort William in Bengal, with effect from the 22nd November 1931.

S. N. ROY,
Joint Secy. to the Govt. of India (offg.).

ARMY DEPARTMENT.

Simla, the 4th July 1931.

Part B.

No. 416.—The following appointments are made:—

* * * *

AUXILIARY FORCE, INDIA.

* * * *

The undermentioned officers designate of the Army in India Reserve of Officers are granted tempy. commissions for the periods noted against their names:—

Calcutta Light Horse.

To be 2nd Lt.

Michael Evelyn Ferrar. From 10th to 25th Mar. 1931.

* * * *

No. 421.—The following relinquishment is permitted:—

AUXILIARY FORCE, INDIA.

The Revd. H. Bridges, B.D., Hony. Chapln. to the E. B. Coy. Dated 9th June 1931.

CANTONMENTS—REGULATIONS.

No. 422.—In exercise of the powers conferred by section 35 of the Cantonments (House-Accommodation) Act, 1923 (VI of 1923), the Governor-General in Council is pleased to direct that the following further amendments shall be made in the Cantonments (House-Accommodation) Rules, 1923, the same having been previously published as required by sub-section (1) of section 36 of the said Act, namely:—

Amendments.

(1) Rules 5 to 14 of the said Rules shall be omitted and rules 15 and 16 shall be renumbered 5 and 6 respectively.

(2) In Schedule A to the said Rules for Forms I, II and III the following forms shall be substituted, namely:—

"FORM I.

Notice to owner under sub-section (1) of section 6 of the Cantonments (House-Accommodation) Act, 1923 [to be used when clause (*a*) of that sub-section is applicable].

To

.....

WHEREAS I....., Officer Commanding the Station.....Cantonment, have received an application in writing from ..... being [*a military officer stationed in (posted to) the Cantonment/a President of a military mess in the Cantonment] stating that he is unable to secure suitable accommodation in the Cantonment for [*himself/the mess] on reasonable terms by private agreement and that no suitable house or quarter belonging to Government is available for his occupation or for the occupation of the mess, and whereas I am satisfied on inquiry of the truth of the facts so stated:

*Words not required to be struck out.

AND WHEREAS I consider that the liability imposed by section 5 of the Cantonments (House-Accommodation) Act, 1923, should be enforced in respect of house No..... situated at..... within the said Cantonment, of which house you are the owner:—

This is to require you to permit the said house to be inspected, measured and surveyed by .....on the..... day of .....19 , at.....A.M./P.M.

(Signed)

Commanding Officer of the Cantonment of.....

FORM II.

Notice to owner under sub-section (1) of section 6 of the Cantonments (House-Accommodation) Act, 1923, [to be used when clause (*b*) of that sub-section is applicable].

To

.....

WHEREAS I....., Officer Commanding the Station.....Cantonment, am satisfied on inquiry that there is not in the Cantonment a sufficient and assured supply of houses available at reasonable rates of rent by private agreement to meet the requirements of

the military officers and military messes whose accommodation in the Cantonment is, in my opinion, necessary or expedient.

AND WHEREAS I consider that the liability imposed by section 5 of the Cantonments (House-Accommodation) Act, 1923, should be enforced in respect of house No..... situated at..... within the said Cantonment, of which house you are the owner:—

This is to require you to permit the said house to be inspected, measured and surveyed by.....on the.....day of .....19 , at.....A.M./P.M.

(Signed)

Commanding Officer of the Cantonment of.....

FORM III.

Notice to owner under clause (*a*) [*and clause (*c*)] of sub-section (1) of section 7 of the Cantonments (House-Accommodation) Act, 1923.

To

.....

WHEREAS on the report of..... I ....., Officer Commanding the Station..... Cantonment, am satisfied that house No.....situated at..... within the said Cantonment, of which you are the owner, is suitable for occupation by a military officer or a military mess.

Take notice that you are hereby required to execute on or before the.....day of..... 19....., a lease of the said house to the Government for a period of.....years [†and to give possession of the same to me within 21 days from the service of this notice] :—

And take notice that the amount of the annual rent proposed as reasonable for the said house (calculated* on the assumption that you will carry out the repairs hereinafter required) is Rs.....and that unless within a period of 30 days from the service of this notice you refer the matter to the court of the District Judge you will be deemed to have accepted the said rent.

(*And take notice that you are hereby further required to execute on or before the .....day of.....19..... at a total estimated cost of Rs.....the repairs specified in the annexed list, being in my opinion necessary for the purpose of putting the house into a state of reasonable repair

List of repairs to be executed.

Nature of repair. Estimated cost.)

*To be omitted where the owner is not required to execute repairs under clause (*c*) of section 7 (1).

†To be omitted when the house is occupied (see section 11 of the Act).

(Signed)

Commanding Officer of the Cantonment of.....

FORM IV.

Notice to occupier under clause (*b*) of sub-section (1) of section 7 of the Cantonments (House-Accommodation) Act, 1923.

To

.....

WHEREAS on the report of..... I ....., Officer Commanding the Station .....Cantonment, am satisfied that house No.....situated at.....within the said Cantonment, of which you are the existing occupier, is suitable for occupation by a military officer or a military mess:—

Take notice that you are hereby required to vacate the said house on or before the..... day of.....19.....

(Signed)

Commanding Officer of the Cantonment of....."

3. For sub-clause (2) of clause II in the form of lease set out in Schedule B to the said rules, the following shall be substituted, namely:—

"(2) That, subject to his right to avoid the lease in any such event as is specified in Clause (*e*) of section 108 of the Transfer of Property Act, 1882, he will yield up the said dwelling house on the expiration of this lease in a state of reasonable repair."

JUDICIAL.

No. 423.—In exercise of the powers conferred by section 30 of the Auxiliary Force Act, 1920 (XLIX of 1920), the Governor-General in Council is pleased to direct that the following further amendment shall be made in the Auxiliary Force Rules, 1920, the same having been previously published as required by sub-section (*4*) of the said section, namely:—

After Rule 14 of the said Rules, the following rule shall be inserted, namely:—

"14-A. **Allowances admissible to Cadets.**—Enrolled persons, who are liable to military training under section 6 but not to military service under section 7 of the Act will be granted the following allowances at the rates, and subject to the conditions, laid down in the regulations:—

(*i*) Travelling allowances,

(*ii*) Expenditure admissible to other classes of the Auxiliary Force (India) from the training grant,

(*iii*) Rations in camp,

(*iv*) Musketry allowances."

G. M. YOUNG,

Secy. to the Govt. of India.

LEGISLATIVE DEPARTMENT.

NOTIFICATION.

Simla, the 26th June, 1931.

No. 44/31-C. & G.—The following Interim Report of the Delegates of India to the Eleventh Assembly of the League of Nations is published for general information:—

INTERIM REPORT OF THE INDIAN DELEGATION TO THE ELEVENTH (ORDINARY) SESSION OF THE ASSEMBLY OF THE LEAGUE OF NATIONS (1930).

TO THE RIGHT HONOURABLE W. WEDGWOOD BENN, D.S.O., D.F.C., M.P., HIS MAJESTY'S SECRETARY OF STATE FOR INDIA.

SIR,

We beg to submit our Interim Report on the Eleventh (Ordinary) Session of the Assembly of the League of Nations, held at Geneva from the 10th September to 4th October, at which we had the honour to represent India.

2. This Report consists of a general survey of the main subjects dealt with during the Assembly and a description in greater detail of the subjects with which we ourselves were principally concerned and of our own activities. We shall follow the example of our predecessors by presenting at a later date a Final Report, which will cover completely the ground of the work of the Assembly this year and contain the text of the resolutions adopted by the Assembly, the texts of some of the more important reports and of the principal speeches made by members of the Delegation and other matter required for record.

Preliminary Remarks.

3. Numerically the Indian Delegation was the same as for some years past, consisting of three full and three substitute delegates. His Highness the Maharaja of Bikaner had been a delegate at the Assembly of 1924 and Sir Ewart Greaves at that of 1929. Sir Ewart Greaves was obliged to return to England after 10 days, and his place was taken by Sir Basanta Mullick, who had twice previously attended meetings of the Assembly. The rest of us had had no previous experience of meetings of the League of Nations.

Opening of the Eleventh Session.

4. The proceedings of the Assembly were opened on the 10th September by His Excellency M. Zumeta, First Delegate for Venezuela, acting as President of the Council. Fifty-two out of fifty-four States Members were represented in the Assembly, the absentees being the Argentine Republic and Honduras. His Excellency M. Titulesco, Delegate for Roumania and Roumanian Minister in London, was elected President of the Eleventh Assembly, and proved himself one of the best who had held office. The election of Vice-Presidents and the General and Agenda Committees proceeded in accordance with the usual routine.

The General Debate.

5. The year had been one of great activity on the part of the organs of the League, but there was no signal achievement to be placed to its credit; in fact, several important Conferences had had results which were either negative or disappointing. Notable, if partial, success had, it is true, attended the London Naval Conference, which was held outside the sphere of the League, but it had not been possible to hold a further meeting of the Preparatory Commission for the Disarmament Conference. The political situation in Europe was certainly no better than in 1929, and the prospects of an improvement were diminished by the results of the German elections, which took place a few days after the opening of the Assembly. The representatives of nearly every country, particularly in Europe, were acutely conscious of the economic crisis. In these circumstances optimism would have been out of place. The serious character of the prevailing conditions caused the majority of the speakers to address themselves to the facts in a spirit of realism without excessive rhetoric.

M. Briand's Speech.

6. A subject which received much attention was the proposal for the creation of an organisation for the consideration of European co-operation. M. Briand had made it known at the Assembly of 1929 that he intended to prepare proposals of this nature. Since then he had issued a memorandum to the European Governments. Their observations on it had been considered by a Conference of European States immediately before the Assembly, and it had been decided that the proposed organisation should be created within the framework of the League. It was expounded at length, though hardly in detail, by M. Briand himself in the Assembly. Most of the speakers in the general debate referred to it; none questioned the need for closer co-operation, and there was general agreement that further discussion should take place with a view to converting the idea into a concrete proposition. But the spokesmen of some of the non-European States emphasised that if machinery for dealing with European problems were created within the framework of the League, the interests of the non-European members would have to be safeguarded. The Assembly passed a resolution which, after recognising in principle the need for closer European co-operation, and confirming the view that this should be effected within the framework of the League, invited the Governments of the European States, acting with the assistance of the League Secretariat as a Committee of the League, to carry the enquiry further with a view to presenting concrete proposals to the next Assembly. It was stated in the resolution that this enquiry might be conducted by the European States in conjunction with the non-European Members of the League and with States which are not Members of the League, and the President of the Assembly stated when the motion was adopted that it was understood that the meetings of the Committee for European Union should be open to all States Members, in order that those not immediately concerned might place before the Committee any observations which they might consider necessary. In pursuance of this resolution a formal meeting of the Committee of Enquiry for European Union was held on the 23rd September, when the future procedure was arranged and the date of the next meeting was fixed for January 1931.

Speech of His Highness the Maharaja of Bikaner.

7. His Highness the Maharaja of Bikaner addressed the Assembly on the 16th September. His Highness began by recalling his association with the Peace Conference and the fact that he shared with Sir Robert Borden, who had made the opening speech, the privilege of assisting at the birth of the League. He stood there as the symbol of the unity of India in her adherence to the League, representing both British India and the Indian States, which comprise about one-third of the area of India and one-fourth of her population. India, as much as other countries, was convinced that no array of difficulties, however great, must be allowed to discourage them from the pursuit of peace. It was only a few years ago that mankind still believed that glory was to be won through war, but the outlook of the civilised world was now altered. He, like General Hertzog, who had spoken earlier, was a soldier, and there were none who more deeply desired to serve the cause of peace than soldiers. Soldiers knew that there could be no effective security from war without a substantial and universal limitation of armaments; they also knew the difficulties, but these difficulties must be overcome. India had special problems on her frontiers, for which the machinery of the League afforded no protection, but she was ready to collaborate in all schemes of disarmament compatible with her security; the philosophy of India was an embodiment of the most complete and consistent code of pacificism in the world. India could not but be friendly to the underlying aims of the European co-operation which M. Briand had expounded. M. Briand had disclaimed all idea of organising Europe in a spirit of antagonism to the outside world; yet there might be a danger in these early years of the League that a plan for the closer union of Europe might give rise to misapprehension outside Europe as running counter to the basic principles of the Covenant that the League existed not for Europe, not for Asia, but for the world. Any impression that Europe was seeking to consolidate its industrial position to the detriment, however unintended, of less fortunate parts of the world might lead to consequences which no Member of the League could desire. It was, therefore, a happy instinct which had prompted M. Briand to give all Members of the League an opportunity to consider how far the

machinery of the League could be adopted to the consideration of regional problems. International co-operation in the economic sphere should be as far as possible world-wide rather than sectional or regional. The depression of agriculture and the depression of industry were organically allied problems and embraced the whole world; it was for the technical organisations of the League to investigate the means whereby industry and agriculture alike could be safeguarded against the recurrence of depression. Sympathetic criticism was needed for progress, and service to the League must be rendered with a loyalty which was not blind but proceeded from clear-sighted courage.

Speeches of Mr. Graham and Mr. Henderson.

8. Two important speeches were made by the British Delegation, Mr. Graham spoke on the economic situation and Mr. Henderson dealt with political subjects.

9. Mr. Graham said that it had been hoped last year that with the Reparations Settlement a period of stability was being approached. This hope had been disappointed by the collapse of commodity prices, and no one could say that the fall of prices had yet reached bed-rock. He hoped that the machinery of the League would be able to make use of the research work on trade depressions which was being carried out in various countries, and so make some practical contribution towards safeguarding the world against recurrent distress. He went on to refer to the so-called Tariff Truce Conference of last spring. He announced the decision of the British Government to ratify the Convention for concerted economic action which was to provide the basis for further negotiations. These negotiations were to cover other economic restrictions besides those of tariffs, though he regarded tariff reduction as the most important aim. There was a great danger that the present depression might lead to increased tariffs, which, though they might produce some degree of temporary alleviation, would end by aggravating the situation. Tariffs and economic nationalism could not make any real contribution to the solution of the problem and it was necessary to sound the international note in economic relations.

10. Mr. Henderson said that closer co-operation between European nations, which all agreed was of vital importance for the peace of the world, must be carried out in full agreement with and on the authority of the League, and the machinery required should be League machinery without incurring the risks and difficulties which a system of new and independent institutions might involve. After referring to the fact that all members of the British Commonwealth of Nations had ratified the signature of the Optional Clause, he stated that only 17 Members of the League had not yet signed the Clause and only 11 others, who had signed it, had not yet ratified; this was an advance of great importance, and they might hope soon to see the acceptance of the Optional Clause practically universal. But the Optional Clause was only a first step, and Great Britain stood for the acceptance by all States of the principle that disputes of every kind, and not only those of a justicible nature, should be settled by pacific means. His Majesty's Government in the United Kingdom had always been favourably disposed towards the principle of the General Act of 1928, but in a matter of such vital concern they desired to proceed in close accord with the other members of the British Commonwealth; it would be one of the chief tasks of the approaching Imperial Conference to consider what further contribution the British Commonwealth could make to the cause of disarmament and peace. The proposals to amend certain Articles of the Covenant in accordance with the Pact of Paris and the draft Treaty of Financial Assistance were both measures in the direction of security which Great Britain was prepared to support; but it was the profound belief of his Government that security and disarmament were closely interlocked, and the acceptance of these two measures by the British Government would be made dependent on the condition that disarmament ceased to be a mere phrase and became a reality. Security was impossible if competitive military preparations continued; of all security measures disarmament was the most important, and the obligation in Article 8 of the Covenant to accept a general reduction and limitation of armaments was no less sacred than any other obligation contained in the treaties of peace. It was two years since the Assembly had adopted a resolution which declared that the existing conditions of security were sufficient to allow of the conclusion of a first General Disarmament Convention, and yet in those two years no treaty had been made.

Other Speeches.

11. All the leading statesmen, including Dr. Curtius, the Foreign Minister for Germany, General Hertzog, Prime Minister of the Union of South Africa, and Sir Robert Borden, ex-Prime Minister of Canada, took part in the general debate. A point of special interest was that the delegate for Persia, His Excellency Hussein Alâ, stated that he had just received a telegram from Teheran informing him that Persia adhered to the Optional Clause. A speaker who, as much as any other, seemed to voice the prevailing dissatisfaction with existing conditions was Jonkheer F. Beelaerts van Blokland, the Foreign Minister for Holland. After an unsparing analysis of the failures of the year in international politics and in the activities of the League, he likened the progress of the League during the year to the progress of the new League building; the foundation stone had been laid at the last Assembly, but it still stood alone. He recognised, however, that the spectre of war was definitely fading away. He recalled Article 19 of the Covenant as to the reconsideration of treaties which have become inapplicable and the consideration of international conditions whose continuance might endanger the peace of the world, and he asked whether it would not be well to insert another clause providing for the reconsideration of a form of nationalism which has become inapplicable and the reconsideration of economic conceptions, the continuance of which might endanger the peace of the world.

Elections.

(A) Council.

12. The three temporary Members of the Council who retired this year after three years' tenure were Canada, Cuba, and Finland. China, which had been a Member from 1926 to 1928 and was not under the ordinary rule eligible as a candidate until 1931, presented a claim to be declared eligible for re-election at once, but failed by five votes to obtain the necessary two-thirds majority. At the subsequent election Guatemala, Norway and the Irish Free State were successful with 41, 38 and 36 votes respectively, Portugal being the highest unsuccessful candidate with 30 votes.

(B) Permanent Court of International Justice.

13. The second general election for the Court took place this year. There were 15 judges to be elected. To secure election each candidate has to obtain an absolute majority of votes both in the Assembly and the Council, voting separately and simultaneously. At the first ballot in the Assembly 14 candidates obtained absolute majorities. Four more ballots were necessary before a fifteenth candidate secured an absolute majority. The result of the ballots in the Assembly was then compared with that of the Council, and it was found that the two lists were coincident in respect of 14 names. These 14 candidates were therefore declared elected. These were:—

M. Adatci.
M. Altamira y Crevea.
M. Anzilotti.
M. de Bustamante y Sirven.
M. van Eysinga.
M. Fromageot.
M. Guerrero.
Sir Cecil Hurst.
Mr. F. B. Kellogg.
M. Negulesco.
Baron Rolin-Jaequemyns.
Count Rostworowski.
M. Schücking.
M. Wang Chung-Hui.

14. Five more ballots had to be taken before a candidate again obtained an absolute majority in the Assembly, and it was then found that the choice of the Council had fallen upon a different candidate. After an eleventh ballot in the Assembly it was found that the Assembly and the Council were in agreement in the choice of M. Urrutia, and he was accordingly elected to fill the fifteenth place.

15. After six more ballots in the Assembly, the Assembly and the Council agreed upon the choice of the following as deputy judges:—

M. Erich.
M. Novakovitch.
M. Redlich.
M. da Matta.

This procedure took up the greater part of a day. A point of interest is that the Latin-American States were successful in establishing their claim to the election of three among the 15 judges.

Work of the Six Committees.

16. We now turn to the work of the six Committees, which were constituted as follows in accordance with precedent:—

COMMITTEE I.

Legal and Constitutional Questions.

Chairman: M. Scialoja (Italy): *Delegate of India*: Sir Ewart Greaves; later Sir B. K. Mullick.

COMMITTEE II.

Technical Organisations.

Chairman: M. Colijn (Holland); *Delegates of India*: Sir D. P. Sarvadhicary, Sir Jehangir Coyajee.

COMMITTEE III.

Reduction of Armaments.

Chairman: M. Politis (Greece); *Delegates of India*: His Highness the Maharaja of Bikaner, Sir Denys Bray.

COMMITTEE IV.

Budget and Financial Questions.

Chairman: Count Carton de Wiart (Belgium); *Delegates of India*: His Highness the Maharaja of Bikaner, Sir Jehangir Coyajee.

COMMITTEE V.

Social and Humanitarian Questions.

Chairman: Countess Apponyi (Hungary); *Delegates of India*: Sir Zulfiqar Ali Khan, Sir D. P. Sarvadhicary.

COMMITTEE VI.

Political Questions.

Chairman: Sir Robert Borden (Canada); *Delegates of India*: Sir Zulfiqar Ali Khan, Sir Denys Bray.

COMMITTEE I.—Legal and Constitutional Questions.

AMENDMENT OF THE COVENANT.

17 This matter was perhaps the most important and difficult of those discussed by the Eleventh Assembly. The British Delegation had proposed at the last Assembly that the Covenant should be amended so as to bring it into line with the Pact of Paris. In accordance with the decision of the Assembly, a Committee of Jurists had been convened, and submitted a report containing recommendations as to the amendments necessary and desirable for the purpose in view. These recommendations went somewhat beyond the mere assimilation of the Covenant to the principles of the Paris Pact, chiefly in the direction of providing a positive contribution to the measures in existence for the peaceful settlement of disputes. Also by increasing the obligations of the Covenant the amendments tended to increase the conditions which would constitute a violation of the Covenant, and thus to increase the liability for applying sanctions to Covenant breakers under Article 16.

18. The amendments were discussed by the First Committee and later by a Sub-Committee. Agreement was reached on certain points, and, in particular, it was agreed not to follow the Committee of Jurists in attempting to assimilate recommendations of the Council for the settlement of international disputes under Article 15 (6) to arbitral awards or judicial decisions. But serious difficulties arose in regard to the relation between Article 16, which provides for the application of sanctions, and the amendments of the preceding Articles. There were also difficulties in regard to the position of States Members which have not acceded to the Pact of Paris, in regard to the bearing upon the

amended Articles of the interpretations placed upon the Pact of Paris by certain States at the time of signature or accession and in regard to the compatibility between the amended Articles and certain other treaties, such as the Treaty of Locarno. In view of these difficulties and of the fact that they were no longer dealing with the texts recommended by the Committee of Jurists on which the delegations had been instructed by their Governments, the Sub-Committee decided that the whole matter would have to be further considered by the Governments with a view to discussion at the next Assembly. This decision, although the subject of natural disappointment in certain quarters, was confirmed by the Assembly.

19. The delegations representing the British Commonwealth followed a uniform policy. It was not necessary for us to take any part in the discussions of the Committee. For this reason, and in view of the fact that no decision of substance was reached, we do not attempt to deal with the subject in any detail. For a proper understanding of it, nothing but a close study of the Report of the Committee of Jurists and of the Report of the First Committee of the Assembly would suffice.

Codification of International Law.

20. After several years' preparations the first Conference for the Codification of International Law was held at The Hague last spring. It attempted to deal with three subjects—Nationality, Territorial Waters and Responsibility of States for damage done in their territory to the person or property of foreigners. The results were meagre and the hopes founded upon the Conference were for the most part disappointed. To some extent failure was due to the fact that the preparations, long and elaborate though they were, had not been sufficient to enable Governments to realise the differences which separated them, or to appreciate the extent of the mutual accommodation which would be necessary for success; to some extent also failure was due to the fact that many delegates were more concerned to maintain and establish the existing national or sectional views than to arrive at international accord by adjustment and concession. It was obvious that the results of the Conference did not justify any extension of activity on the same lines, and the Conference itself had made recommendations for a more elaborate future procedure both in the stage in which subjects are considered by independent experts and in the subsequent consultation of Governments. But it was not only a question of procedure. Questions of principle—to what extent and in what fields codification might usefully be applied to the development of international law, or whether that development would be better left to other processes—were also in issue.

21. Various propositions were placed before the First Committee, some contemplating a limitation of the categories of international law in which codification should be attempted, some asking for the appointment of an expert committee to examine the whole question, and others suggesting that Governments should be given time to consider the subject between this and the next Assembly. Speakers differed as to the value which they attached to the results of the Hague Conference and to the process of codification. But all were agreed that no new departure on the old lines was advisable in the immediate future. The questions raised would have required for their solution much more time than was available in the congested state of the Committee's agenda. Before the debate had proceeded far the Committee took the sensible course of adopting a resolution which adjourned the whole question to the next session of the Assembly, and requested the Council to invite Members of the League and non-member States to communicate their observations on the suggestions which had been put forward with a view to their consideration at the next Assembly.

Organisation of the Permanent Court of International Justice.

22. As our predecessors reported, the Assembly of 1929 adopted certain amendments of the Statute of the Permanent Court with the object of (1) consolidating the position of the judges, and (2) placing the Court itself on a permanent and continuous basis These amendments provided, *inter alia* for abolishing the deputy judges and increasing the ordinary judges from 11 to 15, for adopting a system of fixed inclusive salaries for the judges, for introducing the principle of the Court being in permanent session except during vacation and

for prohibiting judges from engaging in other occupations of a professional nature. It had been agreed by the Assembly of 1929 that the amendments might come into force in time for this year's election even though they had not been formally ratified by all the signatories, provided that no Government had any objection to effect being given in advance of formal ratification. Cuba, however, had given notice of objection to this procedure, and this objection was not withdrawn and could not be set aside.

23. The question how to deal with the resultant situation was the subject of much discussion in the First Committee. It was desired that the judges to be elected for the next period of the Court's existence should be subject to the conditions provided for in the amendments so far as was possible while the amendments themselves still awaited universal formal ratification. It was found that the desired changes could be introduced to a large extent under the existing Statute by resolutions of the Assembly and by alterations which it was hoped that the Court itself would make in its rules. We need not describe in detail the arrangements which the Assembly decided to make. The main points are (1) the number of judges has been increased from 11 to 15; the deputy judges have to remain until the Statute is amended, but it will probably not be necessary to call upon their services; (2) the fixed inclusive salary could not be introduced, but an approximation to it has been achieved by largely increasing the fixed portion of the judges' emoluments and diminishing the variable portion under the existing Statute; and consequential modifications have been made in the pension system. Other points relating to the sessions of the Court and the attendance of the judges remain to be regulated by the Court itself. It was on this basis that the election of judges was carried out.

COMMITTEE II.—Technical Organisations.

The Economic Organisation.

24. It has been well observed that if during the first decade of the League its political work was of dominating importance, it is the economic aspect of its work which is taking the pride of place in the present decade. The tendency towards this transition of interest has been accelerated by the great economic depression; and it is no matter of surprise that the discussions of the Assembly and of the Second Committee were largely concerned throughout the present Session with this all-absorbing topic. As the report of the Second Committee states, the economic discussions of the Session "have either dealt in general terms with the causes and various aspects of the depression in certain countries or throughout the world, or have been directed to the elucidation of various problems of commercial policy which the development of the depression renders more and more urgent."

(1) *Study of the Economic Depression.*

25. The Indian Delegation assumed the initiative in the Second Committee in pressing for a careful study of the causes and course of the depression and for an investigation of any remedial or ameliorative action possible under the circumstances. Sir J. C. Coyajee said that the only alternative before the world in the present economic situation is co-operation or chaos. The world has had ample experience of the great evil caused by the long depression which marked the seventies and eighties of the last century. A resolution was put forward which not only covered the above proposals, but also proposed the prosecution and continuation of studies relating to the problem of the recurrence of periods of economic depression. It might be that some of the factors in the development of the present depression appear somewhat abnormal. But then we have to take account of the fact that the war and its sequelæ have radically changed the economic situation in the world; and having once made a comprehensive study of the present great depression it would be a waste of economic effort not to retain some of the machinery instituted for studying the future problems of depressions. The resolution also called for the treatment of agricultural problems on a level of equality with those of industry and commerce.

26. The resolution found powerful supporters; it was backed by the delegates of Great Britain and the Dominions, by Japan and by various other Member States. The delegate for Ireland supported it on the ground that before that resolution there had

been no really comprehensive attempt made to investigate or diagnose the economic disease from which the world has been suffering Even the study of tariffs and the proposals for a tariff truce were proposals which envisaged the matter only partially. Thus, as he observed, the removal of customs barriers, even if achieved, could not lead to a bigger market for Europe as a whole. Above all, attention might be drawn in this matter to the important proposals put forward in Mr. Graham's speech for an inquiry to collect all the facts in regard to the economic depression.

27. On the other hand, though there were no opponents of the resolution, attempts were made to modify it. Thus the delegate for the Netherlands was for a preliminary inquiry by the Financial and Economic Organisation of the League as to whether the main inquiry proposed by the resolution was to be undertaken. The motive of such a preliminary inquiry was stated to be economy. The delegate for France also moved an amendment referring the inquiry to the Economic Consultative Committee "without, however, engaging in any special procedure or special expense."

28. The resolution of the Indian Delegation was modified in form, though not in substance, by an amendment which introduced into it an explicit reference to the collaboration in the work of investigation on the part of the International Labour Office and of the International Institute for Agriculture at Rome. The resolution as framed originally provided for full and general co-operation on the part of all research committees and institutions which were capable of affording suitable or material assistance.

29. The resolution, as finally passed by the Committee and afterwards by the Assembly, was as follows:—

"The Assembly, impressed by the seriousness of the present situation, by the general recession of employment and trade, by the constant recurrence of such periods of economic depression and the failure up to the present to discover any concerted means for averting the losses incurred, resolves that the Economic and Financial Organisation of the League, which has already been studying the causes of fluctuations in the purchasing power of gold and their effect upon the economic life of the nations, should undertake the study of the course and phases of the present depression and the circumstances which led up to it, and for this purpose it should collect the information compiled by institutions already in existence in different countries, centralise such information and, where necessary, fill up any gaps that exist.

"For this purpose the Economic Organisation, advised by, in particular, the Economic Consultative Committee, should put itself in touch with national organisations, whether consultative or planning councils or research institutions concerned with this matter, and should further, with their aid, consider by what means the work now being conducted on the problem of the recurrence of periods of economic depression may be co-ordinated.

"Believing that the restoration of prosperity in the countries which are mainly concerned with agriculture and the production of raw materials is not only a worthy object in itself, but that it will also contribute to the restoration of prosperity in other countries, the Assembly desires that, in the course of the comprehensive inquiry into world economic depression referred to in the present recommendation, special attention should be devoted to the programme and investigations recommended by the agricultural experts who met in Geneva in January 1930, and to the result of the work carried out by international organisation specially qualified in such matters.

"It also recommends that, in connection with these investigations, account should be taken of the results of the inquiry conducted by the International Labour Office into unemployment and the work of other competent international bodies on this subject, in order that the Economic and Financial Organisation, having collected all the available information, may examine at the right moment the advisability of international action, due regard being had to the economic, financial and demographic aspects of the labour problem, including the question of raw materials."

(2) *The Warsaw Conference Resolutions.*

30. It will have been noted that the Indian delegate emphasised in his resolution the importance of finding a remedy for the agricultural aspect of the economic depression. As the representative of a

great agricultural country like India he could have done no less. But the proposals put forward on behalf of India were perfectly general in character and involved no regional action or discriminatory features. Different in character were the resolutions based on the proceedings of the Conference held at Warsaw shortly before the Assembly by representatives of the agricultural countries of Eastern Europe. These resolutions were brought before the Assembly and the Second Committee by the delegates of the countries concerned. They frankly proposed, besides other points to which no objection could be taken, the granting of preferential treatment by European countries to agricultural products of European origin; further, they involved infringement of the most-favoured-nation clause. Regional understandings with preferential features were claimed to be the remedy for agricultural depression. Sir J. C. Coyajee pointed out that the main cause of the agricultural depression had been that production had been outrunning consumption, and that local agreements like those proposed at Warsaw could not be expected to remedy this state of affairs. Consumption can be effectively stimulated only by raising the general standard of living, and that task was quite beyond the power of local agreements like the one under discussion. What was wanted to achieve our purpose was a comprehensive policy.

31. He went on to point out that the present occasion was hardly the right one to embark on the implementing of the Warsaw Resolutions. The League had just created a committee to consider the general problem of European union and co-operation. To bring up simultaneously the particular question of partial and regional preferences within Europe was premature and might prejudice the general question. Finally the Indian delegate voiced the sentiments of the Dominions as well when he pointed out that non-European countries could have no ground for objecting if the European countries by independent negotiations make preferential agreements among themselves, but that it was a very different matter when such agreements were proposed to be made under the auspices and with the sanction of the League itself and through its machinery. The League was concerned with world affairs and policies in their most comprehensive aspects.

32. It is the interest of India along with other non-European agricultural countries to watch very carefully the tendency to promote regional economic agreements under the auspices of the League, and to insist on any necessary safeguards. The Second Committee believed that the Warsaw proposals come within the scope of the economic reorganisation to be discussed between the State signatories of the Protocol of Future Negotiations of 24th March 1930; but always provided that the non-signatory States may be asked to participate, and that the result of all such negotiations shall be brought before a Conference which all States without distinction will be asked to attend.

THE MOST-FAVOURED-NATION CLAUSE.

33. The advocates of the Warsaw resolutions had put forward the view that "there were no hard and fast principles which held good for ever, and that all principles must be adjusted to changing economic and social circumstances..... What we really want is an exception to the Most-Favoured-Nation clause." The preference which the countries of Eastern Europe desired was to be introduced as an exception to that clause. The representative of Austria urged that it was a mistake to insist upon the interpretation of the clause in an over-rigid sense. Others, notably the German delegate, spoke of the possibilities of a compromise. On the other hand the delegates of Denmark and Norway were against any restrictive interpretation of the clause, and opposed in particular the system of customs quotas.

34. Sir J. C. Coyajee pointed out that Indian traditions had been uniformly liberal in the matter of the Most-Favoured-Nation policy, and that India shared with Great Britain the record of never having gone back on the widest interpretation of the Most-Favoured-Nation clause. It was in the light of these liberal traditions that India could agree to most of the principles laid down by the Economic Committee with regard to the field of application of the clause. He expressed his dissent from and opposition to the system of quotas and of specialisation, which might be made to operate in such a way as to nullify at least partially the generality of the Most-Favoured-Nation clause.

CONCERTED ECONOMIC ACTION.

35. At the first Conference on this subject last spring it was found that the idea of a tariff truce could not be immediately adopted, and a result was reached which was somewhat different from what had been originally expected. It resulted in the Convention of March 1930 and a Protocol, which will form the basis of the work of the League in this direction for years to come. The Second Committee took up this aspect of economic work and urged the ratification of the Convention on the part of the largest possible number of States. It also suggested that at the Conference to be held in November 1930 the conditions under which the Commercial Convention would be brought into force should be decided and that consideration should be given to the programme of future negotiations. As regards dumping, which is a growing evil under the conditions of economic depression, the Committee condemned once more this unhealthy practice.

THE FINANCIAL COMMITTEE

36. Although it was unnecessary for us to take any part in the discussions on this subject, the reports presented to the Assembly this year are of so much interest and importance that we feel obliged briefly to describe their nature. Those who desire a closer acquaintance would do well to study the report of the 39th session of the Financial Committee and the report of the Second Committee to the Assembly on the subject.

37. Having practically completed four of the major tasks upon which it has been engaged in recent years—namely, the Greek Refugee Settlement Scheme, the Greek Financial Reconstruction, the Bulgarian Refugee Settlement Scheme, and the Financial Reorganisation of Estonia—the Committee had virtually reached the end of the phase of its work which consisted mainly in the preparation and execution of reconstruction schemes arising out of the dislocation caused by the war. The Committee is now free to devote more attention to general problems of international concern, and it took the opportunity to give a general description of its work and outlook. The Financial Committee has been singularly successful during the early period of the work of the League in rapidly achieving practical and positive results of far-reaching importance, and this has been the result of hard and disinterested technical work on the part of experts whose qualifications command general support and whose co-operation has been brought about through the machinery of the League. The work of the Committee falls into three main categories: (1) general financial question; (2) advice and assistance to particular States; and (3) advice on financial questions arising out of the current work of the Council. In particular the subjects falling under the first heading are of interest to India. One of these is the question of the influence of gold supplies on general economic welfare. A body of experts working on this subject under the Financial Committee has prepared an interim report, of which the conclusion is that the inadequacy of the supply of new gold available for money is likely in the next few years to become a factor which will exercise a depressing influence on prices; it considers that remedial measures may be found to prevent the consequences anticipated from making themselves felt for at any rate some time to come, and it indicates the directions in which such remedial measures may be sought. On another such subject, that of agricultural credits, results of interest to agricultural countries generally are likely to arise out of the study which is being made under the direction of the Committee on the organisation of the co-operative system in Bulgaria.

HEALTH ORGANISATION.

38. Our predecessors have invariably commented on the value of the work of the League in the sphere of Health, and have pointed out that in no other subject has the universality of the League been more fully applied and realised. By promoting co-operation in the development of health measures and in the study of infectious diseases of world-wide importance, the Health Organisation has been most successful in bringing countries into contact with one another, in effecting a realisation of the value of the League in distant countries which are not greatly concerned in a direct sense with its political work and in producing practical results in the field of health, which are of indirect importance from the economic and political point of view.

39. When the work of the Health Organisation in the past year came before the Second Committee, satisfactory progress was recorded in the numerous activities which had been under review in previous years. The most important development of the last year or two, a development which testifies in the most striking manner to the confidence which the Health Organisation has created in its efficiency and authority, has been the applications which certain Governments have addressed to the League for assistance in the improvement and reorganisation of their national health services. Last year the Health Committee had made recommendations to the Greek Government and those recommendations have been followed up and are already assuming concrete shape; for example, a new School of Hygiene is about to be opened in Greece. During the last 12 months the League has sent a Health Mission to China and the National Government of China has accepted, and is already in process of applying, the recommendations of this Mission. The Government of India had asked the delegation to support the work in China as representing an effort on the part of the League to assist Eastern countries, and Sir D. P. Sarvadhikary took occasion to express himself in this sense. Similar work is being undertaken in Bolivia. Accordingly, in Europe, Asia and South America the Health Organisation is contributing in a most practical way to the improvement of health conditions.

40. In the course of the discussion Sir D. P. Sarvadhikary joined with other delegates in congratulating the Organisation on the success of the year's work. He made various observations on the programme of the Health Committee from the point of view of India, and he agreed that the improvement of health conditions was to a large extent a matter of economic interest. He referred to the collaboration between General Graham and Colonel Christophers and the Malaria Commission, and he expressed appreciation for the reappointment of General Graham to the Health Committee. He regretted that, owing to a visit to Europe early in the year and to various important engagements in the East, General Graham would not be able to attend the important meeting of the Health Committee which was to be held at the end of September, and he suggested that the dates and programmes of the meetings of the Health Committee might perhaps be arranged with more foresight and more consideration of the convenience of the representatives of distant countries; in this respect there was room for greater regularity and co-ordination in the development of the work. He thanked the Dutch Government for the arrangements made in connection with the last session of the Advisory Council of the Eastern Bureau which was held at Bandoeng, and for the valuable facilities granted to the members for studying the methods employed in dealing with the health problems of Java. In the course of references to various subjects which were being undertaken, he said that the Government of India hoped shortly to take steps to prevent the entry of the virus of yellow fever into India. Among various subjects which might be undertaken, he suggested an enquiry into the quality and nutritive value of the various artificial foods prepared for the consumption of infants, and into the possibility of standardising these foods at a reasonable cost, and he also mentioned the desirability of an enquiry into the supplies of rice from the point of view of nutrition.

Intellectual Co-operation.

41. The ideas which underlie the Organisation for Intellectual Co-operation have never failed to appeal to Indian delegates at the Assembly. But during the initial and experimental period the measure in which practical effect has been given to these ideas has not corresponded with the hopes which had been formed. In 1929 it was felt that the time had come to overhaul the Organisation, and the energies of the International Committee at its last session had been mainly concentrated on this task. The Assembly was presented with the recommendations of a committee of enquiry in the form in which they had been approved by the International Committee and by the Council of the League. These recommendations appear to be suitably adapted to the end in view, and it is hoped that a new phase in the work of the Organisation will be successfully inaugurated. The main principle is to restrict the subjects under treatment to those upon which the available resources can be effectively concentrated at any given time; and the Institute at Paris, which is the executive organ of the Organisation, will be used mainly to

provide machinery for co-ordinating the work of national institutions, to effect contact between experts in different countries and to make known the results in a series of publications rather than to carry out original work on its own account.

42. Sir Jagadis Bose, whose services have been at the disposal of the International Committee for some years, ceased automatically this year to be a member of the Committee, and it is hoped that his place will be worthily filled when the Council of the League comes to fill the vacancies in the near future.

43. Speaking in the debate in the Second Committee, Sir D. P. Sarvadhikary noted the absence in the report of any reference to civilisations outside Europe. Many of the ideas which seem to be new in Europe were old in Asia. India, possessed resources that could well be utilised by the International Committee, and he had hopes that in the time to come it would be possible for India to co-operate fully with the Committee through the medium of the great intellectual forces of India. He welcomed particularly a suggestion bearing upon the organisation of study travel groups which would secure contact between teachers, scholars and students in Europe and other countries on the lines which had already been followed in the Health Organisation. He thought that one subject with which the Organisation might deal was the evils of objectionable cinema exhibitions. He regretted that during his short visit to Paris it had not been possible to get an adequate idea of the work of the Institute, and he hoped that when the reorganisation was complete a successful future would lie before it. The contribution of India to this work would be that of high ideals which, as the report pointed out, were the real basis of all stability and peace. Unless the minds of the peoples were attuned to peace no instruments such as conferences and conventions would bring peace about, and he thought therefore that the Organisation for Intellectual Co-operation was one of the most important branches of the League.

44. When the report of the Second Committee came before the Assembly for adoption, Sir D. P. Sarvadhikary repeated his views before a wider audience. He was glad that the League dealt not only with facts and realities, as the materialistic world would call them, but also with ideals, and sentiments; the League's work in this sphere must be adequately provided for if abiding peace was to be secured. The League of Nations for the last 10 years had been steadily gaining ground, but not quite on the right lines for lack of the appreciation of ideals. There was already contact between the League and India, but it was not sufficiently close or frequent. When better and intimate contact had been established, great results would ensue. The attempt to further establish world peace through understanding was evidence of the beginning of sanity, but to carry it further was a task which individuals and nations themselves could not carry out and international co-operation was essential. The fact that the Indian Delegation had been led last year by an Indian in high Government office, and was led this year by one of the Ruling Princes of India, showed that the Princes and peoples of India were coming together and trying to realise as far as possible the ideals of the League. In many matters India had contributions to make, but her greatest contribution must be in the region of intellectual co-operation. The saying that the East and the West would never meet was a misquotation and untrue in the highest sense; they were capable of being brought together if the plane on which they met was high enough, and it was on the level which they were then discussing that the East and the West should and could be united.

COMMITTEE III—Reduction of Armaments.

Disarmament.

45. As already mentioned no session of the Preparatory Commission for the Disarmament Conference had been held during the past year. The London Naval Conference had taken place and had resulted, in an agreement between the British Commonwealth of Nations, the United States of America and Japan upon the question of substance and also with France and Italy upon the question of method. The agreement on the question of method cleared the way for further progress in the work of the Preparatory Commission for the Disarmament Conference, but it had not been possible to arrange a meeting of the Preparatory Commission until November. Meanwhile, naval discussions were proceeding between the French and

Italian Governments just before and during the Assembly, but these negotiations came to a standstill before the end of the Assembly. In his speech in the opening debate in the Assembly, Mr. Henderson had stated that the British Government regarded the obligation of disarmament contained in Article 8 of the Covenant as being as sacred as any other obligation arising out of the treaties of peace, and this declaration was warmly welcomed by the German Delegation and those associated with them.

46. The debate in the Third Committee turned on the question whether the Assembly should decide that the work of the Preparatory Commission must be completed at the session which was to begin in November, and whether it should determine without reserve that the Disarmament Conference itself must be held in 1931. The German Delegation and those associatd with them pressed strongly for a categorical resolution in the sense of immediate and definitive action. The British Delegation, though second to none in their desire to proceed with disarmament, were unwilling to accept a motion which might result in the Conference being held before the preparations were complete and the atmosphere favourable.

47. In the end, the Third Committee adopted a resolution which noted that the results of the London Naval Conference were of a nature to facilitate a general agreement on methods at the next meeting of the Preparatory Commission, and which expressed the conviction that at its next session the Preparatory Commission would be able to finish the preparation of the draft Convention and would thus enable the Council to convene as soon as possible the Disarmament Conference.

48. When the report of the Third Committee and its resolution came before the Assembly, the German and Austrian Delegations announced that they would abstain from voting because the resolution failed to fix a date for the Disarmament Conference. These announcements were followed by a speech on behalf of France from M. Briand, who, in justifying the cautious attitude of France towards disarmament in the absence of a full guarantee of security, made discreet allusions to the results of the recent election in Germany, on account of which the French attitude had obviously for the time being hardened.

FINANCIAL ASSISTANCE.

49. The general nature of this scheme has been described in the reports of our predecessors. The delegation last year summarised the discussion of the Ninth Assembly and reported that the scheme had been referred back to the Financial Committee and the Committee on Arbitration and Security for reconsideration on certain points. These two Committees had settled most of the points at issue and the remainder were settled by the Third Committee of the Assembly, which also introduced certain improvements.

50. The most important questions were the degree in which the Convention should recognise the right to financial assistance of a State which was actually the victim of aggression, and the conditions under which loans should be granted when there was a threat of war, but not actual commencement of hostilities. In the first case, the right is recognised in the Convention unless the Council unanimously decides that a loan should not be granted. In the second case, the grant of a loan is subject to two conditions—namely, that one of the parties must have failed to conform to the steps taken by the Council, and, secondly, that the Council must be of opinion that peace cannot otherwise be safeguarded.

51. The British Delegation had decided to make their final accession dependent upon the conclusion of a Disarmament Conference. There was some opposition to the idea of introducing this into the Convention on the ground that the previous acceptance of the plan for financial assistance might be a factor facilitating disarmament. An article was eventually adopted making the operation of the plan for financial assistance dependent upon the entry into force and the maintenance in force of a plan for the reduction of armaments.

52. The Indian Delegation had raised in 1929 the question of the scale of contributions to the expenditure of the League, which was to be used for the distribution of guarantees under this plan. For reasons, the practical force of which we had to recognise, the Financial Committee found it impossible to provide in the Convention for the substitution of the revised scale of contribution when it comes into force for the present provisional scale. The Third Committee recognised the inconvenience to which a Government would be

exposed if its scale of contribution to the expenditure of the League was proportionately reduced while its liability for guarantees continued to be determined by the old scale, but it was unable to go further towards meeting this difficulty than by observing that it will always be possible for a contracting party, before the Convention is renewed, to enter into negotiations with the other contracting parties if it desires the adoption of a new scale.

53. In the Third Committee Sir Denys Bray recalled the remarks of Sir Muhammad Habibullah last year and said that the attitude of India was one of sympathy, tempered with cautious reserve. Owing to her geographical position, India was unlikely to be concerned in the direct advantages which this Convention provided. It might not be very easy to justify in the Indian Legislature the assumption of further commitments in view of the lack of direct advantages. It might have been easier to recommend the adherence of India if the suggestion made last year regarding the basis of the distribution of the guarantees could have been adopted. Much would depend, moreover, on the degree of universality which the Convention might secure. If the Convention attracted support, not merely in Europe, but in Asia and elsewhere, India would probably desire to collaborate in such a world-wide contribution to the movement for the suppression of war.

54. The Convention was opened for public signature in the Assembly on the 2nd October, and was signed by 28 States, some with reservations. We did not sign. The non-signatories included Italy, Germany and Japan, together with several British Dominions and the majority of the non-European States.

CONVENTION TO STRENGTHEN THE MEANS OF PREVENTING WAR.

55. The Assembly of 1928 had adopted a draft text designed to serve as a model for bilateral or plurilateral arrangements. In 1929 the British Delegation proposed that this so-called model treaty should be converted into a general Convention for the adherence of as many as possible of the Members of the League. The Committee on Arbitration and Security had been instructed to recommend the modifications which would be necessary so to convert it; but the Committee had not been successful in producing a single text, and in important parts there were alternative drafts based on fundamentally different conceptions. The idea of the Convention was that on the occurrence of a dangerous international dispute, and while means for the pacific settlement of a dispute were under consideration, the Council could issue recommendations to the parties providing for some sort of armistice and for the avoidance of any aggravation of the circumstances, and that all parties should bind themselves in advance to accept and act upon such recommendations, thus converting a moral obligation into a treaty obligation. But difficulties had arisen in defining the terms upon which the parties would be prepared in any and every circumstance to surrender their liberty of action, and some parties, not relying solely upon good faith for the discharge of the obligations, wished to secure drastic provisions for supervision and sanctions. The Third Committee, faced with these differences of opinion, and after an attempt had been made to reconcile the differences in a Special Committee, came to the conclusion that the subject called for further study, and recommended that the Council should be invited to form a Special Committee to reconsider it and to submit a report for discussion at the next Assembly.

COMMITTEE IV.—Budget and Financial Questions.

THE BUDGET.

56. The total Budget approved in 1930 was 28,210,248 francs. The estimates for 1931, as presented in the main Budget, amounted to 29,966,436 francs. After the deduction of 795,822 francs capital expenditure on account of the new League wireless station decided upon in 1930, these estimates showed an excess on current expenditure over the preceding year of 960,366 francs. In addition to this the supplementary Budget for 1931 amounted to 1,951,995 francs, more than three-fourths of which was for carrying out the recommendations of the Committee on the Reorganisation of the Secretariat, etc. There were also supplementary estimates for proposals involving expenditure put forward during the session of the Assembly.

57. The increase naturally called for criticism, and in the general discussion which preceded the examination of the details there seemed to be a demand for economy on a wider scale than usual. A number of delegates referred to the prevailing stringency of national finances and to the disappointing results of the work of the League in the last year, and announced their intention of voting only for indispensable credits. But when the details came under examination there was in fact little scope for effective criticism and the estimates went through with more ease than usual.

58. A large part of the increase was due to the proposals for the reorganisation of the Secretariat, etc. This subject is dealt with separately, and it will suffice here to say that the changes actually sanctioned this year will cost some 300,000 francs less than the original estimate for the proposals put forward by the Committee.

59. The other main items which went to make up the excess were (1) new posts and regradings chiefly in the subordinate services, most of which were regarded as overdue; (2) increments of salary; (3) the operation and maintenance of the wireless telegraph station approved in 1930; (4) additional office accommodation imperative on medical grounds; (5) increase of the overseas work of the Health Organisation; (6) provision for the decisions of 1930 as to the remuneration of the Judges of the Permanent Court of International Justice. In view of the failure of the recent Conference for the Codification of International Law at The Hague, Sir J. C. Coyajee objected to the credit proposed for the continuance of this work in 1931. This objection was afterwards made effective by the decision of the First Committee, which has been reported above. When the estimates for the International Labour Organisation were before the Committee, Sir J. C. Coyajee stated, in pursuance of the wishes of the Government of India, that India abstained from any criticism of these estimates this year in view of the proposals which Sir Atul Chatterjee had submitted to the Governing Body of the Organisation for the standardisation of the International Labour Organisation Budget, and in the hope that some satisfactory arrangement on these lines would shortly be arrived at.

60. When the supplementary estimates came before the Fourth Committee it appeared that the Supervisory Commission proposed to cut down from 100,000 francs to 50,000 francs the credit for carrying out the enquiry on the economic crisis which had been approved by the Second Committee on the motion of the Indian Delegation. Sir J. C. Coyajee stated that the Indian Delegation was, of course, in favour of all reasonable economy, and, in particular, had always supported the authority of the Supervisory Commission; but the prosecution of the enquiry was important and urgent, and he wished to know whether the reduction of the estimate would have any serious effect on the time within which it could be completed. Other delegates spoke in the same sense, and when it transpired that the reduction of the estimate would delay the completion of the work and would merely involve a transference of the amount to be deducted to the estimates for 1932, the Fourth Committee decided, after a vote had been taken, to restore the original estimate.

61. Doubts were expressed by some delegates whether the Supervisory Commission was scrutinising the estimates of the League with the same vigour as in the past. The Supervisory Commission has possibly been somewhat discouraged by the general failure of the Assembly and its Committees to face the question of expenditure in a resolute spirit. The spokesman of the Supervisory Commission stated that the Commission had no authority to criticise or veto expenditure resulting directly or otherwise from the decisions of the Assembly itself; it could only supervise expenditure on measures decided upon by the Assembly and enlighten the Assembly on the financial implications of its programme. It is obvious that the attitude of the Supervisory Commission must be to some extent a reflection of that of the Fourth Committee.

62. The Budget for 1931, as finally approved amounted to 31,637,501 francs, involving an increase of 3,427,253 francs on the Budget for 1930.

MEMBERSHIP OF THE SUPERVISORY COMMISSION.

63. The Supervisory Commission consists of experts (Lord Meston is one of the number) who serve independently and on their own authority, and not as the representatives of the States of which they are nationals. Nevertheless, owing to the influence and importance of this body there has been a desire for some system providing for rotation of the appointments so that the nationals of as many countries as possible may share

in the work. The Swiss Government proposed that members retiring after three years' service should be eligible for reappointment only after an interval of three years. This proposal was supported by several delegates. But there were fortunately other delegates who insisted upon efficiency based on continuous experience. A compromise was decided upon under which, with effect from 1931, members will be eligible for immediate reappointment for a second term of three years, but after six years' total service must wait another three years before they can be reappointed.

64. At a later stage the Assembly reappointed M. Réveillaud, who has served continuously for a number of years, and also M. Osusky, who retired last year after serving as Chairman for some time. The efficiency of the Commission is therefore assured for some years to come.

REORGANISATION OF THE SECRETARIAT, &c.

65. It will be remembered that the Tenth Assembly appointed a Committee of 13 members, which included Sir A. Chatterjee, to examine 'what steps should be taken to ensure in future, as in the past, the best possible administrative results for the Secretariat, the International Labour Office and the Registry of the Permanent Court of Justice.' The report of the Committee was ready at the end of June. Addenda continued to appear even after the commencement of the Eleventh Session and became available to the delegates only in Geneva.

66. In such circumstances there was much to be said for postponing the consideration of proposals which, taken in their entirety, covered a wide field, and some of which were highly technical. But the pressure for immediate disposal of the subject could not be resisted. Practically all the poposals contained in the report, except those concerning the politically contentious question of the composition of the higher directing staff, were accepted. The Indian Delegation fought hard to secure time for expert scrutiny of the pensions scheme with special reference to the question whether a system of Provident Fund would not be a more appropriate and economical alternative, but did not receive enough support. The view that the pensions scheme should be brought into force from January 1931 finally prevailed.

66A. The main features of the report and of the discussion thereon may now be set out.

(i) *International Character of the Secretariat.*

67. The Committee unanimously placed in the forefront of their report the principle that the officials of the Secretariat of the League of Nations are exclusively international, that their duties are not national but international, and that by accepting appointments under the League they pledge themselves to discharge their functions and to regulate their conduct in the interests of the League alone. Axiomatic as it may seem, this principle required reinforcement. The Indian Delegation gave it their emphatic adhesion in common with the representatives of other countries. The recommendations made by the Committee to amend the staff regulations to enforce this principle were unanimously accepted.

(ii) *Duration of Engagement of the Staff.*

68. The next point dealt with by the Committee was the duration of engagement of the staff. The majority, which included all the members except the German and the Italian, pronounced in favour of the principle of permanency, which they suggested should apply to all except the directing officers of the Secretariat, i.e., the Secretary, Deputy Secretary and Under Secretaries-General and Directors. The minority differed from the majority as regards chiefs of services and members of section whose status and duties resemble those of the higher national civil services. For this class the minority recommended renewable seven years' contract in order that contract with public opinion in the various countries belonging to the League might be maintained and provision made for representation in the Secretariat of all systems of civilisation. On this point the sympathies of the Indian Delegation were with the minority though for different reasons. The objective of the minority was to establish a balance of power in the superior ranks of the Secretariat. The Indian view was that only by board-basing recruitment for these branches of the Secretariat could their spirit and the outlook be made truly international. Mr. Bajpai, who acted for His Highness the Maharaja of Bikaner for this subject, contended that this objective

could best be secured by reserving an adequate proportion of posts in the first division to be filled on temporary contract by recruitment according to some principle of national rotation. In deference, however, to the view of the Secretary-General that the fixing of a proportion of posts to be filled by rotation would be unfair to those already in the service of the League, whose prospects of promotion would thereby be restricted, the proposal was not pressed. The intervention of the Indian Delegation, however, was not without result in that Sir Eric Drummond gave an assurance that, while not tying himself to any proportion, it would be his endeavour to select for posts in this division, as they fall vacant, nationals of countries which at present are inadequately represented in the Secretariat.

69. As regards the second and third divisions of the staff which are engaged upon work of a routine character and are for the most part locally recruited, the Indian Delegation saw no reason to differ from the unanimous conclusion of the Committee of Thirteen which had the wholehearted support of all the other delegations.

(ii) *The High Direction of the Secretariat.*

70. The question which involved the sharpest difference of opinion and gave rise to the most lively debates was that of the organisation of what may conveniently be termed the Directing Staff of the Secretariat. At present, this consists of a Secretary-General, who is of British nationality, a French Deputy Secretary-General, three Under Secretaries-General, who are nationals of Germany, Italy and Japan respectively, and six Directors and four Chiefs of Section. The majority of the Committee of Thirteen recommended the creation of five new posts of Under Secretaries-General in order to satisfy the legitimate aspirations of the States Members of the League who are not permanently represented on the Council. They considered that such a result would not only be in consonance with the principle of equality of States and allay the discontent that now exists among the minor Powers at the virtual exclusion of their nationals from these responsible posts, but would also offer a wider field from which to draw the higher officials of the Secretariat. The minority, which comprised Count Bernstorff and Professor Gallavresi, recommended the addition of only one post of Under Secretary-General to the existing cadre, but sought to secure co-ordination among the Directing Staff by the formation of a committee consisting of the Under Secretaries-General, whom the Secretary-General would be bound to consult on all questions of importance. From the point of view of the countries whose nationals are either unrepresented on the Secretariat or hold only minor positions, the majority proposal was the more attractive. The interests of India, whose contribution to the expenses of the League is second only to that of the Powers permanently represented on the Council and who has much to gain by securing an effective chance of representation in the higher direction of the Secretariat, would obviously be better served by adoption of the majority than of the minority proposal. The Indian Delegation accordingly supported the majority view, even though it was clear that this would involve expenditure which perhaps could not strictly be justified on purely administrative grounds. The conclusion to remit consideration of the whole question of the higher direction of the Secretariat to a fresh Committee, which would report in time for the next Assembly to take decisions on it, really represents a compromise between the two groups of great Powers, viz., Great Britain, France and Japan on the one hand, and Germany and Italy on the other. The minor Powers acquiesced in the conclusion, partly because, owing to the prevailing world economic depression, their representatives were reluctant to agree to the majority recommendation with its consequential increase of cost, and partly because some of them felt that a more economical solution of the difficulty might be found along the line of gradual abolition of the posts of Under Secretaries-General. On the new Committee India will be represented by Sir Atul Chatterjee. This satisfactory result was due to the useful work done by Sir Atul on the Committee of Thirteen and to recognition of the ability of India, in view of her experience of service questions, to contribute usefully to the solution of the outstanding problem. It is neither possible nor necessary to anticipate the recommendations of the new Committee. The Government of India will, it is hoped, have its report in good time to give instructions to the Delegation to the next session of the Assembly. With

this object, the Indian spokesman on the Fourth Committee pressed for completion of the report by the 1st May and succeeded in getting this date adopted by the Fourth Committee.

(iv) *Pensions Scheme.*

71. The scheme of pensions which the Committee of Thirteen had unanimously proposed was adopted by the Assembly and will come into effect from the beginning of 1931. The revised estimate of its cost for the Secretariat, the International Labour Office and the Registry of the Court of International Justice is over a million francs. Strong support for the principle of pensions was forthcoming on the ground that pensions are an attribute of permanent service, and that the non-adoption of a pension scheme would be a breach of faith with the staff and a cause of uncertainty as to their future which would detract seriously from the efficiency of the League's servants. In our view, the first argument did not sufficiently take account of the fact that for a mixed system of permanent and temporary engagements, a Provident Fund was probably more appropriate than a system of Pensions. As to the latter argument we thought that the reasonable expectations of the staff in regard to adequate provision for maintenance after retirement could be achieved just as well by a system of Provident Fund as by a scheme of Pensions. The real grievance against the present Provident Fund maintained by the League is that the contribution made to it by the League is ungenerous. The Indian Delegation contended that the Assembly had a duty to the States Members to satisfy itself that provision for the legitimate requirements of the staff was being made with full regard for economy, and along lines that had the approval of experts. The Draft Pension Regulations which the Committee of Thirteen had prepared could not really be said to satisfy either of these conditions, and the estimates of cost that were put forward were admittedly incomplete. The draft regulations were examined by a Sub-Committee of the Fourth Committee, but this Sub-Committee had no mandate for a radical examination of the problem and confined itself to points of detail. The result was the adoption of a scheme, of which the merits are doubtful. It is hoped that future Indian Delegations will watch its effect on the budget of the League with care. Indeed, we would suggest that a special annual report on the operation of the scheme should be asked for. Should experience reveal that the scheme is administratively unsound or financially extravagant, a special inquiry into its working could be legitimately demanded.

72. Two comparatively minor points arising out of the report of the Committee of Thirteen may finally be mentioned. The majority had recommended the creation of a number of posts of Counsellor on increased salary to compensate heads of section for the loss of prospects of promotion to the post of Director which the principle of filling such posts on the basis of nationality might entail. This proposal, as well the suggestion of the Secretary-General, that while the rank might be given at once as a mark of honour the question of attaching a higher salary to the bearer of the title might be postponed, was rejected. But the equally sound objection to removing the distinction between members of sections A and B of the First Division of the Secretariat and the International Labour Office at considerable additional cost did not receive the support of the Fourth Committee.

73. The debates in the Fourth Committee on the report of the Committee of Thirteen were prolonged and often lively. There was no lack of interest in the proceedings, either on the part of the members or that of the audience. But the popular interest was mainly political and inspired by the knowledge that over the difference between the majority and minority views there would be a tussle between the Great Powers. The representatives of other countries on the Committee, in so fas as they were not pledged to support the protagonists of the majority or minority view for political reasons or jealous of the predominance of the nationals of these Powers in the Secretariat, were concerned mainly with avoiding addition to the already heavy budget of the League. Those who concentrated upon examining what was primarily an administrative problem with a single eye to administrative efficiency found themselves in a minority. But the insufficiency of the time allowed for calm and careful examination of reports covering a wide and sometimes technical field must bear the main share of the responsibility for this state of affairs. The need of allowing more time for consideration of the League's reports requiring action must be repeatedly emphasised if the danger of hasty decisions based on incomplete scrutiny is to be avoided.

COMMITTEE V.—Social and Humanitarian Questions.

OPIUM AND DRUGS.

74. The principal work of the League during the past year had been the preparations for the Conference on the Limitation of the Manufacture of Drugs. The Advisory Committee had drawn up a plan and the procedure was to include (1) the collection of the necessary statistical and other information, (2) a preliminary conference of drug manufacturers, and (3) a limited conference for the negotiation of a Convention for which the Council had already issued invitations to 25 States.

75. This procedure was not being carried out as rapidly as the Assembly of last year had hoped, as the Manufacturers' Conference could not be held until the month following the Assembly and the final Conference had been fixed for May 1931. In addition to the plans for the limitation of manufacture, there were various other aspects of the subject under discussion.

76. In the course of the general debate Sir Zulfiqar Ali Khan said that the limitation of manufacture could not come too soon or be too effective so far as India was concerned. In spite of energetic preventive measures, India suffered greatly from illicit imports, and after the sacrifices she had made in connection with the export of opium, she expected responsive action from the countries of manufacture. He mentioned some leading facts and figures in regard to the success of the policy pursued in India in recent times for the reduction of the cultivation and consumption of opium, and added that certain internal problems which were of domestic rather than of international concern were receiving careful attention. India was waiting for the manufacturing countries to take practical measures to discharge the obligations which they had already accepted under the Conventions, and that India herself was ready to fall in with any plan for limitation, provided only that it was practical and effective. While disappointment might be felt at the delay which had occurred, he maintained that the foundations had been soundly laid by the Advisory Committee, and that impatience must not be allowed to interfere with the essential preparatory work. He mentioned the difficulty which arose from the development of manufacture in countries which were not members of the League and not parties to the decisions of the League, in particular in Turkey. It was a regrettable and alarming fact that restrictions in certain countries tended to drive the evil further afield and that the recent developments in Turkey, if they continued, might undermine any arrangements that might be agreed to among other countries for the limitation of manufacture. He thought that while the conclusion of an agreement for the limitation of manufacture must be the principal work of the League in the immediate future, efforts in other directions should not be relaxed, and he supported the view of the Dutch delegate that it was necessary to rely upon, and maintain in full vigour, the machinery of the Geneva Convention. He referred to the observations of the Advisory Committee as to the importance of centralised police work in each country, and of international co-operation between the national police services. After mentioning the enquiry which had recently been conducted in India as to the advantages and methods of centralised police activity in regard to the illicit traffic, and the possibility that a Central Information Bureau would be created in India, he expressed a hope that the Japanese Government would be prepared to accept a suggestion which was being made to them, that personal contact and consultations should be established between the Japanese and the Indian authorities. He referred to the passage in the report of the Advisory Committee which gave details of the various brands of cocaine seized in the illicit traffic in India and other places in the Far East. Most of it was apparently of Japanese origin, and he expressed dissatisfaction that firms whose products had been frequently found in the illicit traffic should still be licensed to manufacture, and that the sources of certain notorious brands should still remain a mystery. He expressed some surprise that the Japanese Government had not been able to supply an authoritative figure for legitimate internal consumption of cocaine, and said that until this figure was available there must be grave suspicions as to the destination of the bulk of the cocaine manufactured in Japan, and there would be no means of estimating the sufficiency of the decision announced last year to reduce the manufacture of cocaine in Japan by 10 per cent. for four years. Having regard to these facts, he appealed to the Japanese delegate to represent strongly to his Government the necessity for early and effective action. He recognised that new and

stricter regulations had been introduced in Japan, and hoped that these would be strictly applied. In reference to the increase in the size of the Advisory Committee from 14 to 21 members, he expressed the hope that when the mandate of the new Committee expired in three years' time, the phase of activity upon which the League was now engaged would have been successfully terminated, and that it would then be possible to restore the Advisory Committee to a more reasonable size. The Advisory Committee had done excellent work in establishing and giving publicity to the facts and in recommending sound and practical measures of control. If that work had not yet produced its full fruits, the fault lay with the Governments rather than with the Committee. Finally, he expressed the hope that the Committee would continue to enjoy the confidence of the States Members.

77. Speaking later in the debate, the Japanese delegate said that he himself deplored the smuggling which took place. Owing to defects in the Japanese regulations it had not so far been possible to trace the sources of the traffic. These defects had been remedied in the revised regulations, and the Japanese authorities hoped that their inquiries would be more successful in future. He said that the amount of cocaine manufactured in 1929 in Japan was 1,215 kilogrammes, this being more than 200 kilogrammes less than the amount manufactured in 1928. The Japanese Government had estimated the legitimate consumption in 1929 in Japan proper and in Japanese territories as being a little over 1,000 kilogrammes, though it was not yet possible to say whether this was the normal amount of consumption. He gave further figures to show that the surplus unaccounted for was about 1,700 kilogrammes, which included the quantities held by retailers and doctors and others licensed to keep and dispense cocaine for medical and scientific purposes. He maintained that the basis on which medical practice was organised in Japan justified the retention of a comparatively high quantity of the drug in the hands of retailers and dispensers. Finally he said that the Japanese authorities were endeavouring to place drugs under severe control so that leakage into the hands of smugglers would become impossible, and that in this work they would do their best and would co-operate with other Governments so far as the international side of the question was concerned.

78. The most important and controversial matter which was discussed in the Committee was the nature of the Conference to be held for the limitation of manufacture in May next. As already mentioned, the Assembly of 1929 had decided after much discussion that the Conference was to be of a limited and not of a general character, and the Council had already issued invitations to 25 States The manufacturing countries are only about 10 in number, and as the essential purpose of the Conference is to secure the acceptance of obligations to limit manufacture by those States, there were strong reasons for restricting the attendance of non-manufacturing States. Nevertheless, the proposal for a general Conference was revived and strongly pressed, on the plausible but not really convincing ground that all States are interested as consumers. The Indian Delegation, with a few others, attempted, but without success, to resist the strong current of opinion which was created in favour of a general Conference Eventually the Committee decided, after a vote from which we abstained, to convert the Conference arranged for May next from a limited into a general Conference. We fear that the prospect of a successful issue of the Conference has not been improved by this decision.

79. Another subject of discussion was a resolution submitted by the Chinese delegate for an inquiry to be carried out by the League into the nature of the extent and methods of the illicit traffic in drugs. This resolution seemed to fail to take account of the work which the League had already done for years past through the Advisory Committee with a large measure of success. Eventually the resolution was modified and elaborated, and in its final form it may succeed in extracting information from countries which have so far failed to co-operate with the League in this respect, without at the same time imposing any new administrative burden on countries like India which have already furnished regular and plentiful information. The resolution also asks that the Advisory Committee should report on the possibility of collecting estimates of the number of drug addicts in each country, together with information as to the varieties and quantities of the drugs which they consume. In the nature of things this inquiry will be of a somewhat unpractical nature and its results cannot be very complete or reliable. Nevertheless, the demand for such an inquiry was insistent.

TRAFFIC IN WOMEN AND CHILDREN.

80. The work of the League in this field is a valuable example of the effects which can be produced, not by creating obligations, but by the convincing analysis of essential aims and by mutual enlightenment as to the experience of different countries in securing these aims. The facts which have been collected have shown that the traffic is dependent upon certain factors (as, for instance, the system of licensed houses), and the experience of those Governments who have succeeded in removing or mitigating those factors is placed at the disposal of those who have still to do so. Governments are therefore, to an increasing extent, placed in the position of knowing both what to do and how to do it. Evidence of the fruitfulness of this procedure accumulates each year, and this year was no exception. It is now recognised, as proved by experience, that the licensed house system is not justified as a means of protecting public order and health, and that the abolition of the system, which is essential to the suppression of the traffic, can be carried out without disadvantage in other directions.

81. It is due to the provision of funds by the American Bureau of Social Hygiene that an inquiry has been undertaken in the East similar to the inquiry which recently took place in Europe and America, and a Travelling Commission of three members, chosen by the Council, has started for the East with the object of ascertaining the facts on the spot. The procedure which has already produced valuable results in the West has therefore now been applied to the East.

82. The Fifth Committee had no decisions to take on this subject this year, but in the course of its review of the year's work it had occasion to note the encouraging statements made relative to progress in the abolition of the licensed house system, and it recorded its approval of the information which is being compiled and distributed as to the laws and regulations of many countries on various aspects of the social problem. Sir D. P. Sarvadhikary joined in the general expressions of approval of the League's work in this sphere and of the spirit of moderation and of "hastening slowly" which animated the efforts of the Advisory Commission. He associated himself with the representative of Japan in emphasising the necessity for dealing with questions of this sort with due regard to the peculiar circumstances and atmosphere of the countries concerned. He welcomed the appointment of the Travelling Commission and hoped that when in due course it came to India its visit would be fruitful of results, but he expressed the opinion that the international traffic was practically non-existent in India. He referred specially to the question of the cinema and its influence on morals, and he thought that, as in the case of manufactured drugs, it was necessary to deal with this question in the country of origin as well as in that of exhibition; great harm was being done in Eastern countries by cinema exhibitions which showed European life in an undesirable light. He believed that in certain communities there were so-called marriage laws which permitted of an undesirable state of affairs; it was a matter of great delicacy to deal with this subject with due regard to local susceptibilities and legitimate local customs, but nevertheless such problems should be radically investigated with a view to the removal of all abuses.

PENAL ADMINISTRATION.

83. This question has hovered on the border-line of League activities for some time, but it was for the first time definitely on the Agenda of the Assembly this year. In January last the Council had authorised a procedure for collecting the views of the International Prison Commission and the Howard League for Penal Reform as to what aspects of the question could advantageously be dealt with internationally through the League, and after that for consulting the International Labour Office, the Economic Committee, the Health Committee and the Child Welfare Committee. It was made clear in the Council that these preliminary studies were to refer only to the collection of information.

84. The Secretary-General presented a report which showed that this procedure was not complete and that the full material would not be available until next year. In these conditions there had been no opportunity of consulting the Government of India, and it was not even known in advance whether the aspects of penal administration which might be recommended as suitable for treatment through the machinery of the League related to matters of domestic concern or were restricted to international matters such as the treatment of foreign prisoners.

85. The British delegate, Miss Susan Lawrence, brought forward a resolution recommending to the favourable consideration of Governments certain standard minimum rules for the treatment of prisoners which had been prepared by the International Prison Commission and asking for reports on these rules with reference to the situation in each country; the resolution also proposed the appointment of a Committee to confer with the International Prison Commission as to the best way in which the League might co-operate for the development of prison administration in accordance with modern standards. In its original form this resolution seemed to go too far. In the first place, while we were aware that the Government of India belonged to the International Prison Commission and had therefore had an opportunity of considering the standard minimum rules, we did not know whether, or to what extent, they had concurred in the rules or whether they would wish the Assembly to give the rules any measure of endorsement. It also seemed doubtful whether a procedure should be approved which might to some extent prejudice the general question of the League taking up domestic matters of penal administration in any form. We also felt that the practice of seeking decisions on points of substance in subjects which Governments, as a whole, had had no opportunity of adequately considering was one to be resisted in the absence of any consideration of urgency.

86. We had some preliminary discussion with the British Delegation, who were good enough to modify their draft resolution in a direction which partly met our objections. Sir Deva Prasad Sarvadhikary therefore felt justified in supporting the modified draft with some reservations. He said that though the Government of India was one of the members of the International Prison Commission, it had not had any opportunity of considering the proposals contained in the resolution and that the Indian Delegation was therefore without instructions in regard to them. He could not commit the Government of India in so far as the resolution might amount to a recommendation of the standard minimum rules, but he thought that there could be no objection to simply circulating the rules to the Governments for consideration and report. The question of penal administration was for the most part purely national, but there might be aspects that would make it more than national, and if violence was done to humanitarian principles international principles must certainly prevail. How far this might be the case in any individual country would have to be considered when the information had been collected. He then referred to the situation as regards penal administration in India and the improvements which had been made or were awaiting the provision of financial resources. It was felt in India that further reforms were overdue, but that was not a matter which concerned the League. He was therefore prepared to accept the British draft resolution on the clear understanding that it implied nothing beyond the collection of information, and that, owing to the shortness of time, he could not accept any obligations on the part of the Government of India.

87. Eventually, the resolution was revised by a sub-committee in the light of various criticisms passed by other delegations, and, in its final form, it seemed to us unobjectionable, and the whole subject will be open for unprejudiced discussion next year when Governments will have had full opportunity of considering it.

COMMITTEE VI.—Political Questions.

MINORITIES.

88. This question has not been discussed by the Sixth Committee for some years. This year it was referred to the Sixth Committee on the motion of the German Delegation, and the object of the German Government was apparently rather to secure that the minority administration should be the subject of annual review by the Assembly than to bring up concrete controversies for decision. There was some difference of opinion expressed as to the jurisdiction of the Assembly in regard to the execution of the minority treaties, but no one questioned the right of the Assembly to debate the subject of minorities generally. It was agreed that the procedure introduced by the Council in 1929, was an improvement on that which had previously been in force, and, although it was the subject of criticism, no one demanded that it should be revised pending further experience of its application. The view that the existence of the minority treaties and their application

were having a beneficial, though indirect, effect upon the treatment of minorities whose rights are not safeguarded by treaties, seemed to meet with general support. The debate was admirable, both for its courageous thoroughness (for the subject strikes at the root of post-war Europe) and its temperate character. Attention was called to the services which the representatives of non-European countries, acting as rapporteurs to the Council on minority questions, had rendered to the cause of a good understanding among the European peoples. As the report presented to the Assembly by the Sixth Committee said, "the main idea brought out by the debates was co-operation between majorities and minorities. Majorities must be just and generous and minorities must be loyal. Governments must constantly endeavour to smooth the way for mutual understanding and confidence and for co-operation between the majority and the minority."

MANDATES.

89. In the debate it was generally agreed that the Mandatory Powers had been materially assisted by the Mandates system in achieving considerable progress in all branches of administration in the territories entrusted to their charge, especially in native policy and the suppression of abuses in connection with the liquor traffic. The Assembly was sufficiently confident of the success of the system to suggest that the experience gained through it might be of great value for the administration of other territories in which conditions were similar. On particular points the Sixth Committee expressed satisfaction at the improvement of the position in Palestine, and noted with approval the undertaking given by the British Government to provide the Mandates Commission with an opportunity of making observations on whatever decisions the British Government might come to in regard to the scheme for closer union in East Africa before such decisions became operative.

REFUGEES.

90. This work has been and indeed still is of considerable humanitarian and economic value. But it is of the essence of the problem that it should be liquidated without avoidable delay. It has hitherto been dominated by the personality of Dr. Nansen, and his lamented death has increased the necessity for providing adequately for the gradual completion of the task. There is in existence a large organisation which, after a period of comparative independence, was for some years placed under the International Labour Organisation and was last year transferred temporarily to the Secretary-General. It is financed partly by a League grant (at present 333,800 gold francs), partly by fees charged for identity documents and partly from private funds. The work of the Sixth Committee was to consider and take decisions on the recommendations of the Inter-Government Advisory Commission as to future arrangements. For various reasons the Organisation as a whole was not found suitable for absorption into the Secretariat of the League. There are two main aspects of the work, that which relates to legal protection, civil rights and the status of refugees, and that which relates to their maintenance, relief and employment. The first will, in future, be part of the duties of the Secretariat. For the second aspect, an International Refugees Office will be created under the direction of the League in accordance with Article 24 of the Covenant. The League will grant towards the expenses of this Office a diminishing subsidy, which for 1931 will be at the same figure as that for 1930 stated above. The Office is to draw up a systematic plan for liquidating the work by the end of 1939. The League has been fortunate in securing the services of M. Max Huber, President of the International Red Cross Committee and former President of the Permanent Court of International Justice, to take charge of the new office.

SLAVERY.

91. The Slavery Convention of 1925 has not produced all the results that were hoped of it. Slavery still exists in certain countries which have not yet adhered to the Convention, and all attempts to obtain the application of the Convention in those countries have, so far, been unsuccessful. The special effort made in pursuance of the

Assembly resolution of 1929 to obtain information from Governments as to the slavery which continues to exist had had meagre results. In these circumstances the British Government, which had been responsible for the promotion of the Convention of 1925, brought forward proposals for the creation of new machinery to deal with the subject. They proposed that a Permanent Slavery Organisation should be instituted on the lines of the Permanent Mandates Organisation, to consist of a Standing Committee of independent authorities and a permanent Bureau or Secretariat, to collect material for the Commission to prepare its reports and to attend to the execution of its recommendations.

92. We felt constrained to oppose this suggestion because the results that might be expected from such an Organisation were hardly likely to justify the recurrent cost. After a preliminary debate in the Sixth Committee, in which the Indian Delegation did not find it necessary to take part, the proposal was referred to a Sub-Committee, on which Sir Zulfiqar Ali Khan was appointed to serve. Long discussions took place in the Sub-Committee, and he then found a convenient opportunity to explain India's position. In the course of doing so he expressed on behalf of the Government of India full sympathy with the object in view and referred to the recent expeditions in Burma.

93. The original British proposal met with little support, and was replaced by another that the League should convene a meeting of experts chosen in the same way as the Temporary Slavery Commission, which had drafted the Convention of 1925. Sir Zulfiqar Ali Khan felt justified in supporting this proposal, as, although it was doubtful whether such a meeting would be fruitful in its results, its cost would have been small and non-recurrent.

94. The modified British proposal failed to secure a majority, and after various alternatives had been examined the Sub-Committee adopted by a majority a proposal of the Portuguese Delegation, which noted that the information so far furnished by Governments was not sufficient to give an accurate idea of the present situation, postponed consideration of any changes in the existing procedure till next year, and invited the Governments to amplify the information already supplied, not only in regard to the conditions prevailing in their own territories, but also in regard to the present general position on the subject of slavery.

95. This proposal was eventually approved by the majority of the Sixth Committee and by the Assembly, although the British delegate expressed dissatisfaction and stated that the British Government would press for further activity on a later occasion. The course of the discussion certainly indicated that the countries in whose territories or colonies social conditions of a primitive nature still survive, are still very cautious in their attitude towards any movement from outside in the direction of the improvement of those conditions.

96. It only remains for us, in concluding our Report, to express our high sense of the honour and responsibility which devolved upon us as representatives of India at the Assembly of the League of Nations, and our appreciation of the co-operation which we received from our colleagues, Sir D. P. Sarvadhikary, Sir Denys Bray, and Sir J. C. Coyajee, who served as assistant delegates.

We have the honour to be, Sir,

Your obedient Servants,

GANGA SINGH,
Maharaja of Bikaner.

ZULFIQAR ALI KHAN.

EWART GREAVES.

B. K. MULLICK.

1st April 1931.

L. GRAHAM,

Secy. to the Govt. of India.

RAILWAY DEPARTMENT.

Railway Board.

NOTIFICATION.

Simla, the 18th June 1931.

No. 7594F.—In pursuance of sub-section (*1*) of section 135 of the Indian Railways Act, 1890 (IX of 1890), the Governor General in Council is pleased to declare that the administration of the Assam Bengal Railway shall be liable to pay in aid of the funds of the local authorities set out in the first column of the schedule annexed hereto the tax specified in the second column thereof.

Schedule.

Local authority. 1			Tax. 2
District. 1(1)	Police-station. 1(2)	Name of local authority (union board). 1(3)	
Tippera ..	Brahamanbaria.	Natai ..	Union rate.
	Kasba ..	Kalmpur ..	Ditto.
		Benauti ..	Ditto.
		Gopinathpur ..	Ditto.

J. F. BLACKWOOD,
Secy., Railway Board.

The Calcutta Gazette

THURSDAY, JULY 16, 1931.

Part I B

Educational Notices.

Education Department, Bengal.

NOTIFICATIONS.

Calcutta, the 3rd July 1931.

The Post-Graduate Scholarships of the value of Rs. 100 a month each held by the undermentioned candidates are renewed for a further period of one year, with effect from the 1st July 1931 :—

Md. Nurul Absar.

Subject of Research.

Bibliography, with special reference to the subject of Islamic publications in India.

Place of work.

Calcutta Madrasah.

Pulin Behari Sarkar.

Subject of Research

Cellulose, with special reference to the subject of constituents accompanying cellulose in the cell walls of jute, straw and other fibres.

Place of work.

Dacca University.

Muhammad Enamul Haque.

Subject of Research.

History of Bengali Literature, with special reference to the subject of contributions of Musalmans to Bengali Literature during the period of Muhammadan rule ending with the close of the Husani dynasty, *i.e.*, C 1540.

Place of work.

Calcutta University.

Anil Krishna Chaudhury.

Subject of Research.

Anthropology, with special reference to the subject of Racial Immunity.

Place of work.

Medical College, Calcutta.

Hirendra Nath Das Gupta.

Subject of Research.

Chemistry, with special reference to the subject of Organo Arsenic Compound and Organic Amines.

Place of work.

University College of Science, Calcutta.

The undermentioned candidate is awarded a Post-Graduate Scholarship of the value of Rs. 100 a month for one year only, with effect from the 1st July 1931 :—

Kshirod Gopal Mazumdar.

Subject of research.

Physics, with special reference to the subject of (1) Application of high frequency method in the investigation of dialetric constant of molecules, (2) Absorption on Spectra.

Place of work.

Presidency College, Calcutta.

J. M. Bottomley,

Director of Public Instrn., Bengal (offg.).

Chittagong Division.

Chittagong, the 27th June 1931.

Rules for the guidance of private candidates for the Matriculation Examination of 1932.

The following rules for the guidance of private candidates for the Matriculation Examination are published for general information.

2. Private students are those who have not attended any recognised or unrecognised school for at least one year previous to the examination. The term "private students" includes *bona-fide* school-masters.

3. Private students must appear at the Test Examination of one of the following institutions on the dates mentioned below:—

Comilla Zilla School, Noakhali R. K. Zilla School, Chittagong Collegiate School and Rangamati High English School.

Date of examination—7th, 8th, 9th, 10th and 11th December 1931.

Female candidates are not required to undergo any Test Examination.

Each private student will pay a fee of Rs. 5 to the head of the institution in which he appears for the Test Examination. No private student will be admitted to the Test Examination unless he is accompanied for the purpose of identification by some person known to the headmaster of the institution in which he appears.

4. Application for permission to appear at the Test Examination must be sent in time so as to reach this office not later than the 15th November 1931. The information to be given and the documents to be appended, in original, are the following:—

(*a*) Name of the school in which the candidate last studied.

(*b*) Transfer certificate, in original, granted to the candidate by the headmaster of the school in which he last studied; or

(*c*) In the case of a candidate who previously appeared at the Matriculation Examination, Controller's receipt, in original, for the fee paid.

(*d*) Age of the candidate. No candidate, who will not have completed the age of 15 years on the first day of the Matriculation Examination, will be allowed to appear at it.

(*e*) In the case of school-masters, a certificate of good conduct from the secretary of the school in which he is serving or from the Inspector of the district or subdivision concerned.

(*f*) A certificate from a respectable gentleman to the effect that the candidate has prosecuted a regular course of study and has been subject to proper discipline and that he has not read in any school since the last Matriculation Examination.

(*g*) A statement by the candidate giving the following facts:—

(i) Residence.
(ii) Father's name.
(iii) Second language besides English.
(iv) Vernacular language for composition.
(v) Vernacular language from which translation is to be made into English in the first English paper.

(vi) Which of the following subjects he has taken up:—

(1) Additional mathematics.
(2) Additional paper in the classical language.
(3) History.
(4) Geography.
(5) Elementary mechanics.

(vii) The name of the school at the Test Examination of which the candidate wishes to appear must be stated. Candidates of the plains districts will not be allowed to appear at the Test Examination of the Rangamati High English School.

N.B.—A student who failed to pass or appear at the annual examination for promotion to class X at the end of the session 1930 and then left the school can, under no circumstances, be allowed to appear at the Test Examination.

5. The Inspector on being satisfied will countersign and return the application, which will then be the candidate's passport for admission to the Test Examination.

6. Every candidate must deposit his fee for the Test Examination with the headmaster of the institution in which he intends to appear, at least 15 days before the date of that examination. The headmaster will deposit the amount realized by him into the local Treasury and forward a copy of the Treasury chalan to this office. He should also submit to this office an account of the charges incurred by him (including remuneration to examiners) for conducting the examination of private candidates, together with vouchers in support of the charges, on receipt of which the Director of Public Instruction will be moved to sanction the expenditure.

7. The headmasters of the institutions named in paragraph 3 above should direct private students who satisfy the test to appear before them in due time, with their applications for admission to the Matriculation Examination, and to sign them in their presence. They will then grant the necessary certificate and forward the applications to the Inspector for countersignature, after which they will be sent by the Inspector direct to the candidates.

8. In no circumstances should the fee for the Matriculation Examination be sent to the Inspector's office. It should be sent to the Controller of Examinations, Calcutta University, by the candidates themselves, together with the countersigned applications.

9. Private students must understand that the Test Examination of any school other than those named above will not be accepted by the Inspector.

10. The Matriculation Examination will be held in March 1932, the exact dates of which will be notified by the University.

11. Applications and fees for admission to the Matriculation Examination must reach the office of the Controller of Examinations on or before the date to be fixed by the University.

KAMALUDDIN AHMAD,

Inspr. of Schools, Chittagong Division (offg.).

NOTIFICATION.

Examination in the Art of Teaching, Burdwan Division.

Chinsura, the 29th June 1931.

An examination in the Art and Practice of Teaching for teachers of English subjects in Boys' Secondary Schools (aided and unaided) will be held at the Hooghly Training School, on Monday, the 7th September 1931, at 11 a.m., and on the following date, if necessary. The examination of teachers of vernacular subjects and oriental classical languages of the same schools will also be held on the same date and at the same place and hour.

2. The following teachers are eligible for the examinations:—

(*a*) Teachers of English subjects, who have passed (*i*) the Matriculation or some higher University Examination, or (*ii*) the Middle English Scholarship Examination or the terminal examination at the end of the middle stage of instruction. The examination of these teachers will be conducted in English.

(*b*) Teachers of vernacular subjects, who have passed the same examinations, or the Middle Vernacular Scholarship Examination, or the terminal examination at the end of the middle stage of instruction. The examination of these teachers will be conducted in vernacular.

(*c*) Pandits and Maulvis employed in teaching an oriental classical language other than Pandits in Sanskrit *tols* and Maulvis in Madrasahs. They must have passed the Sanskrit Title Examination or the Final Examination of a Senior Grade Madrasah. The examination in the case of these classes of teachers will be conducted either in English or vernacular at the option of the candidate.

3. The examination will consist of—

(*a*) A practical examination in class control, the candidate being required to keep a class of at least a dozen boys attentive and fully occupied throughout a lesson.

(*b*) A practical test of teaching ability, the candidate being required to give two lessons on any two of the subjects—English, Bengali, Sanskrit, Arabic, Pensian, Urdu, History, Geography, Arithmetic, Algebra, Geometry, etc.

(*c*) An oral examination, in which the Inspector of Schools or other examiner will ask questions on the Art of Teaching, object lessons, class management, organisation and discipline.

4. The following books are recommended for study by the candidate:—

(*a*) For teachers of English subjects—

(1) Indian Teachers' Guide, by P. Wren, (2) Indian School Organisation, by P. Wren, (3) Suggestions for the consideration of Teachers (Board of Education, Whitehall), (4) Talks to Teachers (James), (5) Art of Teaching by D. Salmon, (6) Direct Method by Tate and Rajagopalchari.

(*b*) For teachers of vernacular subjects—

(1) বিবিধ বিধান by A. N. Adhikari, (2) Teachers' Manual by Khan Bahadur Bhasanullah, (3) পাঠটীকা লিখিবার পদ্ধতি by Jagannath Dey, (4) মনোবিজ্ঞান by S. C. Brahmachary, (5) ভূগোল শিক্ষা প্রণালী by I. Haque.

(*c*) Teachers of oriental classical languages may study any of the above sets of books.

5. Intending candidates from High Schools should submit their applications through the Headmasters and teachers of Middle Schools and Junior Madrasahs through the District Inspectors, so as to reach this office *not later than the 23rd August 1931*. Every candidate will produce at the time of the examination the certificate of his having passed the University or other examination, which admits him to the present examination. The following information should accompany the application:—

(1) Name (in full).

(2) Name of father (in full).

(3) Names of native village and district.

(4) Last examination passed.

(5) Year of passing.

(6) Period of service as a teacher.

(7) Present appointment with date (mention whether he is a teacher of English subjects or vernacular subjects or of oriental languages).

(8) Two class subjects in which he wishes to be examined.

(9) Signature of applicant with full address.

6. Every candidate must bring with him at the time of examination two lesson notes on the subjects in which he wishes to give lessons. These notes should be made over to the examiner at the time of the practical examination.

7. Candidates should state whether they sat for the examination previously; if so, how often, giving dates.

K. C. RAY,

Inspector of Schools, Burdwan Division.

State Medical Faculty of Bengal.

CORRIGENDUM.

The 8th July 1931.

No. 1327F.—In the list of successful candidates at the Final Licentiateship Examination of the Faculty held in April 1931, published at page 532 of Part IB of the *Calcutta Gazette*, dated the 18th June 1931, *for* "Chattopadhyay, Saileswar, Bankura Medical School" *read* "Chattopadhyay, Sibeswar, Bankura Medical School."

R. M. DAS,

Secy., State Medical Faculty of Bengal.

Burdwan Division.

Chinsura, the 7th July 1931.

Rules for the admission of Private Candidates to the Calcutta University Matriculation Examination, 1932.

1. Private students are those who have not attended any recognized or unrecognized High English School for at least one year previous to the Matriculation Examination The term "private students" includes teachers of schools.

2. Private candidates must appear at the Test Examination to be held on Monday, the 14th December 1931, and the following days at any of the Government High Schools in the Burdwan Division.

3. Applications for admission to the Test Examination must be submitted through the head master of the school in which the applicant last read. The head master, in fowarding the application to this office, should note whether he recommends the application or not. If he does not, his reasons should be stated. The information to be given in, and the documents to be appended (in original) to, the application are the following:—

(*a*) Name of the school in which the candidate last studied.

(*b*) Transfer certificate (in original) granted to the candidate by the head master of the school in which he last read; or

In the case of a candidate who previously appeared at the Entrance or Matriculation Examination, the Registrar's receipt (in original) for the fee paid.

(*c*) Age of the candidate. No candidate is eligible who has not completed the age of fifteen years on the first day of the Matriculation Examination.

(*d*) In the case of school masters, a certificate of good conduct from the Secretary of the school in which the candidate is serving.

(*e*) A certificate from a respectable gentleman other than a relative to the effect that the candidate has prosecuted a regular course of study and has been subject to proper discipline, and that he has not read in any school since the last Matriculation Examination held in March 1931. Detailed information is needed under this head. The person granting the certificate should state his social or professional position.

(*f*) Names of subjects in which the candidate wishes to be examined.

(*g*) Postal address.

4. Each private candidate will have to pay a fee of Rs. 6, which should be remitted to the Inspector of Schools, Burdwan Division, Chinsura, along with his application for admission to the Test Examination by the 20th November 1931, after which date a fine of Rs. 2 will have to be paid for each week's delay. *Under no circumstance will the admission fee be refunded.* No private candidate will be admitted to the Test Examination, unless he is accompanied, for the purpose of identification, by some person known to the office of the Inspector of Schools, Burdwan Division, or to the staff of the Zilla School where he will appear. Those who are not *bonâ fide* residents of the Burdwan Division will not be admitted to the Test Examination.

5. **The fee for the Matriculation Examination should NOT be sent to this office.** It should be sent to the Registrar by the candidate himself, together with his countersigned application.

6. The Matriculation Examination for 1932 will be held on the 9th March 1932 and the following days or any other subsequent dates declared by the University.

INTERMEDIATE AND B.A. EXAMINATIONS.

1. Deputy Inspectors of Schools, Sub-Inspectors of Schools and *bonâ fide* teachers of English schools, who have served as such for the full period of three academical years preceding the examinations, will be admitted to the abovementioned examinations.

2. Candidates for the Intermediate and B.A. Examinations must produce certificates of character and length of service from the Secretaries of their respective schools. Candidates for the B.A. Examination must forward with their applications their F.A. or I.A. certificates, and those for the Intermediate Examination their Entrance or Matriculation certificates. Candidates admitted to a former examination must produce the Registrar's receipt in addition.

3. Under section 19 of the Indian Universities Act, candidates for the Intermediate and B.A. Examinations are informed that their applications for admission to these examinations will not be considered, unless they enclose with their applications to this office the sanction of the Senate to appear at the said examinations. Candidates, who have applied for or have obtained the special permission of the Senate for the purpose, are required, under section 9, Chapter XV of the Revised Regulations dealing with the registration of University students, to apply at once to the Registrar for the registration of their names as University students. No person will be deemed a "University student" unless and until his name has been duly registered, and none but "University students" will be eligible for admission to any University examination other than the Matriculation.

4. The printed form of application should be carefully and correctly filled in and submitted to this office on or before the 20th December 1931 at the latest, together with other papers as mentioned in rules 2 and 3, after which no application will be received.

5. The dates of Intermediate and B.A. Examinations of 1932 may be obtained from the Registrar, Calcutta University.

K. C. RAY,

Inspector of Schools.

Presidency Division.

NOTIFICATION.

40/1A, Free School Street, Calcutta, the 29th June 1931.

Test Examination of private candidates for the Matriculation Examination of 1932.

A Test Examination of private candidates will be held in the Senate Hall, Calcutta, from Monday, the 30th November 1931. *Such candidates only as reside in any of the districts of the Presidency Division, including Calcutta, will be admitted to the examination.* The term "private candidates" includes schoolmasters. A non-Bengali candidate should produce an affidavit sworn by his legal guardian before a Magistrate that the candidate has been in residence in any of the districts of the Presidency Division including Calcutta for at least one year before the date of the examination.

2. (*a*) Private candidates are those who have not attended any school, recognised or unrecognised, imparting general education for at least one year previous to the Matriculation Examination. They should produce proof that they have not attended any school for such period.

(*b*) They should also produce certificates of conduct and progress in studies from the authorities of the last school where they read, and also a certificate from other reliable authorities regarding conduct and progress in studies after leaving school.

(*c*) The transfer certificates granted to them by the authorities of the schools in which they studied last and the Registrar's receipt for the fee paid in the case of those candidates who previously appeared at the Entrance or the Matriculation Examination must be submitted in original along with the application for permission to appear at the Test Examination.

(*d*) A statement of the antecedents of the candidate should accompany his application. He should state whether he has read in any unrecognised school, and, if so, in what school and what year. A student, who failed to pass the annual examination for promotion to the first class at the end of the year 1930 and then left school, will in no circumstances be allowed to appear at the Test Examination of 1931.

3. *Bona fide* teachers employed in any of the schools in the Presidency Division may be admitted to the examination They must produce certificates of service and character from their employers or from the District Inspector of Schools of the district concerned.

4. No one shall be admitted to the Matriculation Examination unless he has completed the age of fifteen years on the first day of the month in which the Matriculation Examination is held.

5. Each candidate should submit to the Inspector of Schools, Presidency Division, and *not to the undersigned personally*, not later than the 5th October 1931 (under no circumstances an application for permission to sit for the said examination will be entertained after the 3rd November 1931) his application for admission to the Test Examination, with the following particulars:—

(1) Age, (2) home district and residence, (3) father's name, (4) whether he appeared at any previous Entrance or Matriculation Examination, (5) classical language, (6) vernacular language, and (7) which two of the following optional subjects he has taken up:—

(*a*) Additional Mathematics.

(*b*) Additional paper in a classical language.

(*c*) History.

(*d*) Geography.

(*e*) Elementary Mechanics.

Candidates may only offer one of the following vernacular and classical subjects (compulsory or additional):—

Vernaculars—(*i*) Bengali, (*ii*) Hindi, (*iii*) Urdu, (*iv*) Alternative English for those whose vernacular is neither Bengali nor Hindi nor Urdu.

Classics (*i*) Sanskrit, (*ii*) Pali, (*iii*) Persian, (*iv*) Arabic.

6. The admission fee for the examination is Rs. 6 for each candidate. This must be remitted with the application on or before the prescribed date (5th October 1931), after which a fine of Rs. 2 will be imposed for each week's delay. This fee together with fine, if any, should be deposited into a Government Treasury or Sub-Treasury in Bengal and the chalan showing the deposit should be attached to the application which must reach this office on or before the prescribed date. *In no circumstances will the admission fee be refunded.* All examinees must obtain receipts for fees from the Inspector's office, which should be shown to the Superintendent of the Examination Hall on the first day of the examination.

7. No private student will be admitted to the Test Examination unless he is identified to the satisfaction of the Superintendent at the Examination Hall during the examination by a Government servant who is not in the inferior service or by a teacher in any recognised college or high school.

8. Candidates who are sent up by this office must appear at the Calcutta Examination centre.

9. Those who reside at a distance from Calcutta may, as special cases, be permitted to sit at the Test Examination at the nearest Government High English School. They will be supplied with printed question papers from this office to which their answer papers should be sent by the head master concerned.

10. The date of the Matriculation Examination in 1932 will be notified hereafter.

11. Applications and fees for admission to the examination must reach the office of the Registrar on or before the date to be fixed by the University.

12. Programme of Test Examination—

Monday, 30th November—

Morning—English Translation—10-30 a.m. to 1 p.m.

Afternoon—English Test and Grammar—1-30 p.m. to 4 p.m.

Tuesday, 1st December—

Morning—Compulsory Mathematics—10-30 a.m. to 1 p.m.

Afternoon—Vernacular language—1-30 p.m. to 4 p.m.

Wednesday, 2nd December—

Morning—Compulsory Classical language—10-30 a.m. to 1 p.m.

Afternoon—Additional Classical language—1-30 p.m. to 4 p.m.

Thursday, 3rd December—

Morning—History—10-30 a.m. to 1 p.m.

Afternoon—Additional Mathematics—1-30 p.m. to 4 p.m.

Friday, 4th December—

Morning—Geography—10-30 a.m. to 1 p.m.

Afternoon—Mechanics and Hygiene—1-30 p.m. to 4 p.m.

Intermediate and B.A. Examinations in 1932.

Subdivisional Inspectors, Sub-Inspectors and *bona fide* teachers of English schools in the Presidency Division, who have been employed as such for at least three years preceding the examination, will be admitted to the above examinations on production of certificates of character and length of service (with dates) from their employers. Laboratory assistants and demonstrators and librarians of affiliated colleges will be treated as teachers. *Their applications must reach this office on or before the 1st December 1931.*

1. In accordance with section 9, Chapter XV of the revised regulations dealing with the registration of University students, all candidates who intend to appear at any of the ensuing examinations of the University of Calcutta otherwise than as students of affiliated institutions, and who have applied for or have obtained the special permission of the Senate for the purpose, are required to apply to the Registrar of the Calcutta University for the registration of their names as University students. No person will be deemed a "University student" unless and until his name has been duly registered, and none but "University students" will be eligible for admission to any University examination other than the Matriculation. A registration fee of Rs. 2 must accompany every application.

2. Candidates for the B.A. Examination must send to the Inspector of Schools, Presidency Division, and *not to the undersigned personally*, their F.A., I.A., or I.Sc. certificates and candidates for the Intermediate Examination their Entrance and Matriculation certificates, together with a letter in original from the Senate of the Calcutta University, permitting them to appear at the examination.

3. Candidates should carefully read the printed form of application and supply all the information required by the University, including the Registrar's receipt in the case of those school-masters who were admitted to a previous examination of the same class.

4. The date of the Intermediate and B.A. Examinations in 1932 will be notified hereafter.

5. Applications with the countersignature of the undersigned and fees for admission to the above examinations must reach the *office of the Registrar on or before the dates to be fixed by the University*, and must be sent to that office by the candidates direct.

K. N. MITTER,

Inspector of Schools.

University of Dacca.

Ramna, Dacca, the 22nd April 1931.

Admission for the session 1931-32 in the Faculties of Arts (including Commerce), Science and Law will commence on 1st July 1931. Students of this University and all recognised Universities and Intermediate Boards will be admitted till the 21st July 1931. Students of the Calcutta University will be admitted till the 21st July or the 21st day after the publication of their results in *Calcutta Gazette*, whichever is later. After these dates admissions will be made during a further period of fifteen days with a delay fine at Re. 1 per diem. Class fees for undergraduate students (other than those reading for Honours in Physics or Chemistry) and Law students Rs. 8 per mensem; for undergraduate students reading for Honours in Physics or Chemistry, for M.A students and for M.Sc. students in Mathematics Rs. 10 per mensem; for M.Sc. students in Physics and Chemistry Rs. 12 per mensem. Seat rent in halls from Rs. 2 to Rs. 4 and total minimum cost of tuition and living from Rs. 22 to Rs. 25 a month. The University has up-to-date laboratories (including an Experimental Psychology Laboratory), an excellent library, and an organised tutorial system. It possesses splendid residential facilities and strong students' unions, and offers exceptional opportunities for athletics.

(2) The residence for women students is very close to the University buildings and is adequately furnished. Intending candidates for admission to the residence are advised to apply as early as possible.

(3) A pamphlet of general information relating to the staff, courses, scholarships, stipends and other matters will be sent post-free on application to the Registrar.

N. AHMAD, *Registrar.*

Calcutta University.

NOTICE.

Senate House, the 6th July 1931.

Applications are invited from candidates for the Ramtanu Lahiri Professorship in Bengali.

I. (1) The Professor shall be appointed by the Senate on the recommendation of a Selection Committee.

(2) He shall receive a salary in the scale of Rs. 700—50/2—1,000. An initial salary higher than the minimum pay indicated in the scale may be granted if the Senate so decide.

(3) He shall be a whole-time Officer of the University and shall not, without the sanction of the Senate previously obtained, hold any other office to which any salary or emolument is attached.

(4) He shall be entitled to join the University Provident Fund.

(5) He shall be entitled to avail himself of the regular academic vacations and holidays of the University and shall be subject to such leave rules as the Senate may pass from time to time.

(6) Ordinarily the appointment shall be made for five years, after which it may be renewed or made permanent.

(7) The Professor shall vacate his office upon the completion of the sixtieth year of his age unless the Senate should decide that his services should be retained by the University for a further period or periods. Such extension of service shall not be made beyond his sixty-fifth year.

(8) The Professor shall be liable to removal by the Senate on the ground of misconduct or gross neglect of duty after full enquiry into the specific charges brought against him, provided that, at such enquiry, he shall be allowed an adequate opportunity to defend himself.

II. It shall be the duty of the Professor—

(1) To devote himself to the study of Bengali Language and Literature with special reference to their history and development from the earliest times.

(2) To organise and guide research by advanced students.

(3) To hold classes in his subject as may be directed by the Executive Committee of the Post-graduate Council in Arts for the benefit of Post-graduate students.

(4) To deliver annually not less than three public lectures dealing with some aspect of Bengali Language or Literature.

(5) To deliver a course of lectures in affiliated Colleges as may be required by the Syndicate after consulting the Executive Committee of the Post-graduate Council in Arts and the Professor.

(6) To do such other work as may be assigned to him from time to time in connection with the organisation of the department of Indian Vernaculars.

Applicants should state full particulars of their academic qualifications and experience in teaching and research.

Applications with copies of testimonials (which will not be returned) must reach the undersigned on or before the 30th November 1931.

A. N. MUKHERJEE, *Registrar.*

Orders by the Vice-Chancellor and Syndicate of the Calcutta University.

NOTIFICATION.

Senate House, the 7th July 1931.

It is hereby notified for general information that the Government of Bengal, in the Ministry of Education, are pleased to order that, with effect from the commencement of the session 1931-32, the Comilla Victoria College shall, in extension of the affiliation already granted, be affiliated to the Calcutta University in Bengali as a Second Language up to the B.A. Pass Standard and in Elements of Civics to the I.A. Standard.

NOTIFICATION No. T. 282.

Senate House, the 7th July 1931.

The following pieces from the University Selections in English are prescribed to be read for the I.A. and I.Sc. Examinations in 1933:—

Intermediate Prose Selections.

R. L. Stevenson. Walking Tours.
Thomas Carlyle. On the Choice of Books.
Blackie. On Moral Culture.
John Ruskin. Work.
William Wordsworth. Memoir of the Rev. Robert Walker.
Dickens. The Convict's Return.

Intermediate Poetical Selections.

Shakespeare. Coriolanus, Act V, Scene III.
Milton. Samson Bewails his Lot; The Ways of God to Men; To the Lord General Cromwell.
William Cowper. On the Receipt of My Mother's Picture out of Norfolk.
Wordsworth. Skating; The Affliction of Margaret; Yarrow Unvisited.
Lord Tennyson. The Voyage.
Mathew Arnold. Saint Brandan.
Coventry Patmore. The Toys; Magna Est Veritas.
Bertram Dobell. Microcosm.
Andrew Lang. The Odyssey; Pen and Ink.
Francis Thompson. Daisy.
Stephen Phillips. The Revealed Madonna
Lionel Johnson. By the Statue of King Charles; Oxford.

Selections from the Bible, Part II.

Pages 1-52 (up to Luke XVIII, 1-14).

A. N. MUKHERJEE, *Registrar.*

Senate House, the 9th July 1931.

1. Ramranjan Maiti, ward of Babu Sudhirchandra Kundu, resident of Calcutta and a candidate for the I.Sc. Examination of 1930 from the City College, Calcutta, with Roll Cal. No. 1243, is debarred, for gross misconduct, from appearing at any University Examination before 1934.

2. Amiyakumar Sen, son of Babu Jatischandra Sen, resident of Serampur (Hughly), and a candidate for the I.Sc. Examination of 1930 from Bhowanipore Asutosh College, with Roll Cal. No. 1058, is debarred, for gross misconduct, from appearing at any University Examination before 1933.

N. SEN,
Controller of Examinations.

The Calcutta Gazette

THURSDAY, JULY 16, 1931.

Part II

Advertisements.

Notices.

Advertisements, Notices, etc., intended for insertion in this Part of the Gazette cannot be received after noon of Saturday.

IMPERIAL BANK OF INDIA.

Statement of the affairs of the Imperial Bank of India on the 3rd July 1931.

LIABILITIES.

	Rs.	A.	P.
Subscribed Capital ..	11,25,00,000	0	0
Capital paid up ..	5,62,50,000	0	0
Reserve ..	5,40,00,000	0	0
Public Deposits ..	15,00,03,000	0	0
Other Deposits ..	65,61,72,000	0	0
Loans against securities per contra ..	....		
Loans from the Government of India under section 20 of the Paper Currency Act, against Inland bills discounted and purchased per contra ..	....		
Contingent liabilities ..	....		
Sundries ..	1,57,71,000	0	0
	93,21,96,000	0	0

ASSETS.

	Rs.	A.	P.
Government Securities ..	28,17,63,000	0	0
Other authorized securities under the Act ..	2,64,95,000	0	0
Ways and Means Advances to the Government of India ..	....		
Loans ..	9,31,18,000	0	0
Cash Credits ..	29,66,14,000	0	0
Inland bills discounted and purchased ..	3,66,87,000	0	0
Foreign bills discounted and purchased ..	40,98,000	0	0
Bullion ..	....		
Dead stock ..	2,71,84,000	0	0
Liability of constituents for contingent liabilities per contra ..	....		
Sundries ..	82,16,000	0	0
Balances with other Banks ..	27,74,000	0	0
	77,69,49,000	0	0
Cash ..	15,52,47,000	0	0
	93,21,96,000	0	0

The above balance sheet includes:—

	£
Deposits in London ..	1,003,800
Advances and Investments in London ..	881,100
Cash and balances at other Banks in London ..	209,700

Percentage 18·88.

Bank rate 6 per cent.

OSBORNE A. SMITH,
K. M. MACDONALD,
Managing Governors.

(1464—1)

SALE NOTICE.

In the Court of the 1st Sub-Judge, Pabna.

MORTGAGE EXECUTION CASE No. 106 of 1929.

Faridpur Loan Office, Ltd., decree-holder

versus

Gojendra Krishna Dutta, judgment-debtor.

In the above Mortgage Execution case, the properties of the judgment-debtor, as detailed below, will be sold by the Nazir of the Pabna District Judge's Court at 12 noon on the 17th August 1931. The decretal amount including the costs of execution is Rs. 13,912.

(1) 11 gds. 3 kara 4½ dwip share of zamindari right in tauzi No. 175 of the Pabna Collectorate, pargana Amirabad, taraf Syampur Digar, bearing mauzas Jadupur Digar, thana Bera, district Pabna. Land revenue Rs. 117 6 as. 18gds. 2 kag.

(2) 1 gd. 3 kara 4½ dwip share of patni right of mauzas mentioned in lot No. (1) held in patni under Purna Chandra Saha Choudhury at a rental of Rs. 25 8 as. 4 1/12 pies.

(3) A total share of 3 gds. 3 kara 1½ dwip share of the above taraf and mauza bearing two mauza jotes under the zamindars mentioned in lot (2) and bearing a total rental of Rs. 15 10 as. 8 gds. 1 kara 1 kranti.

(4) 5 gds. 2 kara 6 dwip share of zamindari right of taraf Malanchi Goyraha, pargana Sinduri, police-station Sujanagar. Revenue Rs. 57-1-7½ gds., tauzi Nos. 74 and 75 of the Pabna Collectorate.

(5) 1 gd. 1 kranti 2 ⅞ til share of taraf Malanchi mentioned in lot No. (4) in patni right under Purna Chandra Saha Choudhury and others and bearing a rental of Rs. 4-2-8 1/12 pies.

(6) 2 gds. 3 kara 2 kranti share comprising two mirashes under Purna Chandra Saha Choudhury and others in the same taraf Malanchi, bearing a total rental of Rs. 9 7 as.

(7) 7½ gds. zamindari right in tauzi No. 76 of Pabna Collectorate. Land revenue Rs. 15-0--5 pies comprising taraf Banagram, thana Bera, pargana Sinduri.

(8) 7½ gds. zamindari right in tauzi No. 103 of Pabna Collectorate, pargana Sultanpratap, tappa Sakhini. Land revenue Rs. 11-6-11 pies consisting of village Banagram and villages under that.

(9) 13 gds. 1 kara 1 kranti share in zamindari right of Pabna Collectorate, tauzi No. 148, pargana Birahimpur, mauza Ranhagar and others and bearing a revenue of Rs. 54-3 as.

(10) 10 gds. share of zamindari in tauzi No. 148, pargana Birahimpur, thana Bera, mauza Latibpur Digar. Land revenue Rs. 61-2-3 pies.

(11) 2½ gds. patni right in village Ruppur, police-station Bera, pargana Birahimpur, bearing rental of Rs. 14-13-10 gds. under Sharifannessa Choudhurani.

(12) 11 gds. 5 dwip share of zamindari right in Pabna Collectorate, tauzi No. 99, pargana Sultanpratap, tappa Sakhini, thana Sujanagar, mauza Pukharnia and others. Land revenue Rs. 10-4-16 gds. 2 kara 2 krantis.

(13) 1 gd. 3 kara 4½ dwip share in dar mourash right under Parbati Sankar Roy Choudhury and others of Teota, in the property mentioned in lot No. (12) above, bearing rental of Rs. 6-14-11 gds. 1 kara.

(14) 4 gds. 1 kara 2 kranti 1 dwip share in zamindari right in Pabna Collectorate, tauzi No. 70, pargana Sinduri, thana Bora, taraf Rajdhardiar, and its appurtenant mauzas. Land revenue Rs. 27-4-13-1 kara 1 kranti.

(15) 4 gds. 1 kara 5 4/12 danti share of patni right in the taraf and mauza mentioned in lot No. (11) above and paying a rent of Rs. 21-4as. 11 gds. 1 kara 1 kranti to Mohesh Chandra Saha Choudhury and others.

(16) 1 anna 6 gds. 2 kara 2 kranti share in the zamindari right in Dacca Collectorate, tauzi No. 10408 and land revenue Rs. 111-9-10½ pies consisting of Char Kataria, police-station Ghior, pargana Sinduri, district Dacca.

(17) 1 anna 6½ gds. 2 kranti zamindari in Dacca Collectorate, tauzi No. 10397, pargana Sinduri, mauza Taraf Ghope Selenda, thana Bera. Land revenue Rs. 24-11-3 5/12 pies.

(18) 10 pies share in patni right in Faridpur Collectorate, tauzi No. 1201, taraf Ramchandrapur, police-station Sujanagar, mauzas Syamsundarpur and others, paying rent of Rs. 45-13-6½ gds. 2 kranti to Raja Sourindra Mohan Guha Roy.

(19) 1 anna 6½ gds. 2 kranti share of patni right in pargana Bajuras Mahabatpur, taraf Bagbaria, under Alimzaman Sahidannessa Bibi and others at rent of Rs. 125-8 as. and consisting of Bagbaria and other mahals in police-station Sara, district Pabna.

J. N. SEN, Sub-Judge.

TARAK NATH MOITRA (Rai Sahib),

Decree-holder's pleader.

Pabna, the 4th July 1931. (1439—1)

In the Court of the Sub-Judge of Khulna.

MONEY EXECUTION CASE No. 22 of 1931.

Srimati Radharani Dasi, decree-holder,

versus

Babu Sailajanath Ray Chowdhuri, judgment-debtor.

THE following property will be sold on the 20th July 1931, at 12 noon, in the Court premises by the Nazir of the Court :—

1. 1 anna share in tauzi No. 957-3, of Khulna Collectorate, mahal Bajitpur, police-station Kaliganj district Khulna, paying annual revenue of Rs. 17,479-0-9.

2. 1 anna share in tauzi No. 108 of Khulna Collectorate, mahal Babulia, pargana Buran, police-station Satkhira, distrct Khulna, paying annual revenue of Rs. 1,578-11-4.

3. 13 gandas 2 karas and 2 kranti share in rent-free holding No. 29B (1) of Khulna Collectorate, paying annual cess Rs. 461-15-0.

4. 1 anna 12 gandas share of a jama held under Babu Sailajanath Ray Chowdhuri and others, paying annual rent of Rs. 61-3-8 gandas.

5. 1 anna 12 gandas share of a jama situated in mauza No. 148 Laskari Kahjra, paying annual rent of Rs. 272.

6. 1 anna 12 gandas share of a jama situated in mauza No. 103 Kasimari, paying annual rent of Rs. 221-6-10 gandas.

7. 1 anna 12 gandas share of rent-free holding situated in mauza No. 99 Satkhira.

H. L. MUKHERJEE, Sub-Judge.

Khulna, the 10th July 1931. (1481—1)

In the High Court of Judicature at Fort William in Bengal, in Insolvency.

NOTICE OF ADJUDICATION ORDER.

No. 118 of 1931.

Re Gagan Chandra Rajeswar Shaha, a firm carrying on business at No. 33, Shib Thakur Lane, in the town of Calcutta. *Ex parte* the creditor.

H. C. Banerjee & Co., creditor's solicitors.

ON the 9th day of June 1931, an order was made by the High Court of Judicature at Fort William in Bengal in its insolvency jurisdiction adjudging the abovenamed firm as insolvent.

NOTE.—All debts due to the estate should be paid to me.

Dated this 10th day of July 1931.

G. M. FALKNER, Official Assignee.

In the High Court of Judicature at Fort William in Bengal, in Insolvency.

NOTICE OF ADJUDICATION ORDER.

No. 153 of 1931.

Re Khirode Chandra Hans and Sarat Chandra Hans, at present carrying on business in co-partnership under the name and style of New Friends Society at No. 124, Grey Street, in the town of Calcutta. *Ex parte* the creditor.

R. L. Dutt, creditor firm's solicitor.

ON the 21st day of June 1931, an order was made by the High Court of Judicature at Fort William in Bengal in its insolvency jurisdiction adjudging the abovenamed firm as insolvent.

NOTE.—All debts due to the estate should be paid to me.

Dated this 10th day of July 1931.

G. M. FALKNER, Official Assignee.

In the High Court of Judicature at Fort William in Bengal, in Insolvency.

NOTICE OF ADJUDICATION ORDER.

No. 155 of 1931.

Re Albert Joseph, residing at No. 1, Weston Street, in the town of Calcutta, employed as an Assistant by Messrs. Lal Chand & Son, at No. 76, Lower Circular Road, in Calcutta aforesaid, *ex parte* the debtor in person.

ON the 24th day of June 1931, an order was made by the High Court of Judicature at Fort William in Bengal in its insolvency jurisdiction adjudging the abovenamed as an insolvent.

NOTE.—All debts due to the estate should be paid to me.

Dated this 2nd day of July 1931.

G. M. FALKNER, Official Assignee.

In the High Court of Judicature at Fort William in Bengal, in Insolvency.

NOTICE OF ADJUDICATION ORDER.

No. 158 of 1931.

Re Saheb Doyal Khanna, lately residing at No. 216, Harrison Road, and at present residing at No. 71, Clive Street, in the town of Calcutta, and lately carrying on business as a dealer in piece-goods and woolen goods at No. 164, Harrison Road, in Calcutta aforesaid, and as a commission agent at Amritsar under the name and style of Jagannath Nathmull in co-partnership with Nathmull Khanna, since deceased, at present of no employment, *ex parte* the debtor.

S. C. Datta & Co., debtor's solicitors.

ON the 26th day of June 1931, an order was made by the High Court of Judicature at Fort William in Bengal in its insolvency jurisdiction adjudging the abovenamed as an insolvent.

NOTE.—All debts due to the estate should be paid to me.

Dated this 2nd day of July 1931.

G. M. FALKNER, Official Assignee.

In the High Court of Judicature at Fort William in Bengal, in Insolvency.

NOTICE OF ADJUDICATION ORDER.

No. 161 of 1931.

Re Eric George Robertson, residing at No. 46, Madan Street, in the town of Calcutta, and employed as an assistant by Messrs. Hall & Anderson, Limited, in Chowringhee Road, Calcutta, *ex parte* the debtor in person.

ON the 30th day of June 1931, an order was made by the High Court of Judicature at Fort William in Bengal in its insolvency jurisdiction adjudging the abovenamed as an insolvent.

NOTE.—All debts due to the estate should be paid to me.

Dated this 7th day of July 1931.

G. M. FALKNER, Official Assignee.

In the High Court of Judicature at Fort William in Bengal, in Insolvency.

NOTICE OF ADJUDICATION ORDER.

No. 163 of 1931.

Re Joseph Ira Saxton, residing at No. 102 B, Elliott Road, in the town of Calcutta, and trying to earn a living as a "Clearing Agent" in Calcutta aforesaid, *ex parte* the debtor in person.

ON the 3rd day of July 1931, an order was made by the High Court of Judicature at Fort William in Bengal in its insolvency jurisdiction adjudging the abovenamed as an insolvent.

NOTE.—All debts due to the estate should be paid to me.

Dated this 10th day of July 1931.

G. M. FALKNER, Official Assignee.

In the High Court of Judicature at Fort William in Bengal, in Insolvency.

No. 38 of 1929.

Estate Lolit Mohan Roy.

NOTICE is hereby given that a dividend is intended to be declared in the above estate by the 6th July next.

The persons claiming to be creditors of the above estate are hereby required to lodge their claims duly stamped, affirmed and necessary documents enclosed by 30th July 1931, after which date claims received by this office will not be considered.

Persons who have already lodged their claims need not file any fresh claims.

A form of proof of debt may be had on application.

G. M. FALKNER, Official Assignee.

10, Old Post Office Street, Calcutta, 26th June 1931.

(1373—1)

In the High Court of Judicature at Fort William in Bengal, in Insolvency.

NOTICE is hereby given that dividends as noted below have been declared and are payable on production of necessary documents in support of the claims—

Estate Gopimohan Roy Chowdhury. No. 150 of 1929. 2nd dividend at Rs. 5 per cent.

Estate N. A. Fink. No. 8 of 1926. 1st dividend at Rs. 25 per cent.

Estate V. O. Reynolds. No. 10 of 1926. 1st dividend at Rs. 40 per cent.

G. M. FALKNER, Official Assignee.

10, Old Post Office Street, Calcutta, 3rd July 1931.

(1444—1)

In the Court of the Sub-Judge at Asansol.

Section 19(2) of the Provincial Insolvency Act.

INSOLVENCY CASE No. 36 of 1931.

NOTICE is hereby given to his creditors that the insolvency petition filed by A. C. H. Cabral, of Burnpur, has been admitted and the 24th July 1931 has been fixed for hearing thereof.

A. K. CHAKRAVARTTY, Sub-Judge.

Asansol, the 7th July 1931. (1451—1)

NOTICE TO CREDITORS OF APPLICATION FOR DISCHARGE.

Section 41(*1*) of the Provincial Insolvency Act.

In the Court of the Sub-Judge at Asansol.

INSOLVENCY CASE No. 18 of 1929.

C. Grant, driver, E. I. Ry., Asansol, applicant.

TAKE notice that the abovenamed insolvent has applied to this Court for his discharge, and that the Court has fixed the 24th July 1931, at 10 o'clock, for hearing the application.

A. K. CHAKRAVARTY, Sub-Judge.

Asansol, the 3rd July 1931. (1441—1)

In the Court of the Deputy Commissioner, Darjeeling.

INSOLVENCY CASE No. 12 of 1931.

Jnan Chandram, district Darjeeling, applicant.

WHEREAS the abovenamed applicant has applied to this Court by a petition to be declared an insolvent, and the Court has fixed the 30th July 1931 for hearing of the application, any one desiring to be represented in the matter may appear in person or by a duly authorised pleader before the undersigned on the date fixed.

[ILLEGIBLE], *for* Deputy Commissioner.

Darjeeling, the 8th July 1931. (1453—1—1467)

In the Court of the Deputy Commissioner, Darjeeling.

INSOLVENCY CASE No. 13 OF 1931.

Sriman Manger of Tukvar, district Darjeeling, applicant.

WHEREAS the abovenamed applicant has applied to this Court by a petition to be declared an insolvent, and this Court has fixed the 30th July 1931 for hearing of the application, any one desiring to be represented in the matter may appear in person or by a duly authorised pleader before the undersigned on the date fixed.

[ILLEGIBLE], *for* Deputy Commissioner.

Darjeeling, the 8th July 1931. (1454—1—1468)

In the Court of the District Judge of Faridpur.

INSOLVENCY CASE No. 60 OF 1930.

Akhil Chandra Das, son of late Pratap Chandra Das, of Baluchara, police-station Palong, district Faridpur, debtor-insolvent.

NOTICE is hereby given that the said insolvent has applied for his final discharge and 31st July 1931 has been given for the hearing of his application.

A. N. SEN, District Judge.

Faridpur, the 7th July 1931. (1446—1)

In the Court of the District Judge of Faridpur.

INSOLVENCY CASE No. 9 OF 1928.

(1) Bhasani Chandra Das, son of late Brojobashi Das, of Jhawtia, and (2) Panchananda Das, son of late Chandi Charan Das, of Forehati, police-station Louhaganj, district Dacca, at present residing at Charprasannadi, police-station Muksudpur, district Faridpur, creditor-petitioner,

versus

Rafijaddi Bepari, son of late Korban Bepari, of Maluhar, police-station Banaripara, district Bakarganj, conveying on business at Bamandanga, police-station Muksudpur, district Faridpur, debtor-opposite party.

NOTICE is hereby given that the order of adjudication, dated the 5th May 1928, passed against the said debtor be and the same is hereby annulled.

A. N. SEN, District Judge.

Faridpur, the 7th July 1931. (1447—1)

In the Court of the District Judge of Dacca.

INSOLVENCY CASE No. 10 OF 1931.

WHEREAS Krishna Lal Saha Roy, son of late Kunja Behari Saha Roy, resident of Balora, police-station Harirampur, district Dacca, has applied to this Court for being adjudged an insolvent, the 27th July 1931 next has been fixed for the hearing of the aforesaid petition, examination of the petitioner and the creditors.

A. HENDERSON, District Judge.

Dacca, the 2nd July 1931. (1429—1)

In the Court of the District Judge of Dacca.

INSOLVENCY CASE No. 11 OF 1931.

WHEREAS Pran Ballava Saha Roy, son of late Dinabandhu Saha Roy, resident of Balora, police-station Harirampur, district Dacca, has applied to this Court for being adjudged an insolvent, the 29th July 1931 next has been fixed for the hearing of the aforesaid petition, examination of the petitioner and the creditors.

A. HENDERSON, District Judge.

Dacca, the 2nd July 1931. (1430—1)

ORDER ANNULLING ADJUDICATION.

Section 42 of the Provincial Insolvency Act, III of 1907.

In the Court of the District Judge, Hooghly.

INSOLVENCY PETITION No. 18 OF 1928.

In the matter of Sagore Ahir, *ex parte*.

THE Court's order having not been complied with, it is ordered that the order of adjudication, dated 15th September 1928, against Sagore Ahir of Rishra, thana Serampore, be and the same is hereby annulled.

Dated this 28th day of November 1930.

K. C. NAG, District Judge.

(2576—1—1435)

In the Court of the District Judge of Hooghly.

NOTICE is hereby given, under clause (2) of section 12 of the Provincial Insolvency Act, V of 1920, to his creditors that the insolvency petition of Ramsworup Sau, son of late Bhola Sau, of Telinipara, thana Bhadreswar, district Hooghly, has been admitted by this Court as No. 44 of 1931 and that the 6th August 1931 has been fixed for the hearing thereof.

S. SEN, District Judge.

Chinsura, the 6th July 1931. (1448—1—1451)

In the Court of the District Judge of Hooghly.

NOTICE is hereby given, under clause (2) of section 12 of the Provincial Insolvency Act, V of 1920, to his creditors that the insolvency petition of Upendra Nath Koley, Surendra Nath Koley and Narendra Nath Koley, sons of late Hem Chandra Koley, of Ramnagor Jolapara, thana Singur, district Hooghly, has been admitted by this Court as No. 43 of 1931 and that the 7th August 1931 has been fixed for the hearing thereof.

S. SEN, District Judge.

Chinsura, the 7th July 1931. (1449—1—1452)

In the Court of the District Judge of Hooghly.

NOTICE is hereby given, under clause (2) of section 12 of the Provincial Insolvency Act, V of 1920, to his creditors that the insolvency petition of Sarada Prosad Kundu, son of late Rangi Lal Kundu, of Dhanyaban, thana Haripal, district Hooghly, has been admitted by this Court as No. 40 of 1931 and that the 4th August 1931 has been fixed for the hearing thereof.

S. SEN, District Judge.

Chinsura, the 3rd July 1931. (1450—1—1450)

In the Court of the District Judge of Jessore.

INSOLVENCY CASE No. 3 OF 1931.

NOTICE is hereby given that Hari Charan Biswas, son of late Ram Lal Biswas, of Nebutala, police-station Jhenidah, district Jessore, was on the 24th day of June 1931 adjudged an insolvent. The insolvent should apply for his final discharge within six months.

P. C. DE, District Judge.

Jessore, the 2nd July 1931. (1434—1)

NOTICE TO CREDITORS OF THE DATE OF HEARING OF AN INSOLVENCY PETITION.

Section 12 of the Provincial Insolvency Act, V of 1920.

In the Court of the District Judge at Midnapore.

INSOLVENCY APPLICATION No. 28 OF 1931.

WHEREAS Kedar Nath Das Adhikary, son of late Gobardhan Das Adhikary, residing at Natsal, pargana Mahisadal, district Midnapore, debtor-petitioner, has applied to this Court, by a petition dated 11th day of June 1931, to be declared an insolvent under the Provincial Insolvency Act, V of 1920, this is to give the creditors notice that the Court has fixed the 24th day of July 1931 for the hearing of the aforesaid petition and the examination of the debtor.

K. C. NAG, District Judge.

Midnapore, the 3rd July 1931. (1426—1)

In the Court of the District Judge of Rajshahi.

INSOLVENCY CASE No. 99 of 1930.

NOTICE is hereby given that Jogeswar Sarker of Hamatkhayera, police-station Bagmara, district Rajshahi, has been adjudicated an insolvent by this Court on 10th April 1931 and directed to come up for his discharge within six months.

G. G. HOOPER, District Judge.

Rajshahi, the 21st May 1931. (1198—1—1471)

In the Court of the District Judge of Rajshahi.

INSOLVENCY CASE No. 132 of 1930.

NOTICE is hereby given that Rakhal Chandra Shaha of Nawabganja, police-station Nawabganja, district Malda, has been adjudicated an insolvent by this Court on 19th June 1931 and directed to come up for his discharge within six months.

G. G. HOOPER, District Judge.

Rajshahi, the 30th June 1931. (1438—1—1434)

ORDER ANNULLING ADJUDICATION.

Section 43 of the Provincial Insolvency Act, V of 1920.

In the 4th Court of the Sub-Judge at Alipore.

INSOLVENCY APPLICATION No. 217 of 1930.

Non Kishore Dosad of Jagatdal Kola Bagan, police-station Jagatdal, applicant.

WHEREAS Non Kishore Dosad of Jagatdal, debtor, does neither appear nor apply for his discharge within the specified time fixed for hearing, it is ordered that the order of adjudication, dated 20th December 1930, against the debtor be and the same is hereby annulled.

Dated this 23rd day of June 1931.

S. N. ROY, Sub-Judge.

ORDER ANNULLING ADJUDICATION.

Section 43 of the Provincial Insolvency Act, V of 1920.

In the 4th Court of the Sub-Judge at Alipore.

INSOLVENCY APPLICATION No. 305 of 1930.

Shaikh Laloo of Bijpore, police-station Bijpore, applicant.

WHEREAS Shaik Laloo of Bijpore, debtor, does neither appear nor apply for his discharge within the specified time fixed for hearing, it is ordered that the order of adjudication, dated 22nd December 1930, against the debtor be and the same is hereby annulled.

Dated this 23rd day of June 1931.

S. N. ROY, Sub-Judge.

ORDER ANNULLING ADJUDICATION.

Section 43 of the Provincial Insolvency Act, V of 1920.

In the 4th Court of the Sub-Judge at Alipore.

INSOLVENCY APPLICATION No. 345 of 1930.

Khirodhar Singh of Beliaghata, No. 7, Koila Depot, police-station Beliaghata, applicant.

WHEREAS Khirodhar Singh of Beliaghata, debtor, does neither appear nor apply for his discharge within the specified time fixed for hearing, it is ordered that the order of adjudication, dated 22nd December 1930, against the debtor be and the same is hereby annulled.

Dated this 23rd day of June 1931.

S. N. ROY, Sub-Judge.

ORDER OF ADJUDICATION.

Section 27 of the Provincial Insolvency Act, V of 1920.

In the 4th Court of the Sub-Judge at Alipore.

INSOLVENCY APPLICATION No. 94 of 1931.

PURSUANT to a petition, dated 3rd March 1931, filed by Jatindra Nath Mukherjee of 4, Raja Monindra Road, Paikpara, 24-Parganas, debtor, and on the application of the debtor himself and on reading his application and hearing his pleader, it is ordered that the debtor be and the said debtor is hereby adjudged insolvent.

It is further ordered that the debtor do apply for his discharge within six months from this date.

Dated this 16th day of June 1931.

S. N. ROY, Sub-Judge.

(1326—1—1478)

ORDER OF ADJUDICATION.

Section 27 of the Provincial Insolvency Act, V of 1920.

In the 4th Court of the Sub-Judge at Alipore.

INSOLVENCY APPLICATION No. 110 of 1931.

PURSUANT to a petition, dated 13th March 1931, filed by Ismail Khan of Kanchrapara, 24-Parganas, debtor, and on the application of the debtor himself and on reading his application and hearing his pleader, it is ordered that the debtor be and the said debtor is hereby adjudged insolvent.

It is further ordered that the debtor do apply for his discharge within six months from this date.

Dated this 17th day of June 1931.

S. N. ROY, Sub-Judge.

(1327—1—1479)

ORDER OF ADJUDICATION.

Section 27 of the Provincial Insolvency Act, V of 1920.

In the 4th Court of the Sub-Judge at Alipore.

INSOLVENCY APPLICATION No. 164 of 1931.

PURSUANT to a petition, dated 28th April 1931, against (1) Muhammad Ehiya Mea, (2) Muhammad Abu Bakar, (3) Emdadali Khan, partners of firm the Ajmeer Soap Factory at 31, Bagmari Road, 24-Parganas, debtors' firm and on the application of Mohadeo Prasad of 16, Goenka Lane, Calcutta, creditor, and on reading their applications and hearing their pleaders, it is ordered that the debtors be and the said debtors are hereby adjudged insolvent.

It is further ordered that the debtors do apply for their discharge within six months from this date.

Dated this 16th day of June 1931.

S. N. ROY, Sub-Judge.

(1328—1—1480)

In the 4th Court of the Sub-Judge of 24-Parganas.

INSOLVENCY CASE No. 200 of 1931.

Sukdev Bearer of Kalabagan, police-station Bartola, 24-Parganas, applicant.

To Dhirendra Babu of Mudi ly, police-station Metiaburuz, 24-Parganas, and others, creditors.

ON the 12th day of June 1931 it was ordered that the matter of the petition of the applicant be heard on the 20th day of July 1931 and that the said applicant do attend to be examined by this Court on that date.

S. N. ROY, Sub-Judge.

Alipore, the 15th June 1931. (1329—1—1481)

In the 4th Court of the Sub-Judge of 24-Parganas.

INSOLVENCY CASE No. 210 OF 1931.

Gujratti Miya of 37 Ballyganj Park, 24-Parganas, applicant.

To Akhoy Kumar Ghose of 47, Pathuriaghata Street, Calcutta, and others, creditors.

ON the 13th day of June 1931 it was ordered that the matter of the petition of the applicant be heard on the 20th day of July 1931 and that the said applicant do attend to be examined by this Court on that date.

S. N. ROY, Sub-Judge.

Alipore, the 15th June 1931. (1330—1—1482)

In the 4th Court of the Sub-Judge of 24-Parganas.

INSOLVENCY CASE No. 226 OF 1931.

Gobardhan Kurmi of Khardah, 24-Parganas, applicant.

To Nur Muhammad Kabuly of Khardah, 24-Parganas, and others, creditors.

ON the 16th day of June 1931 it was ordered that the matter of the petition of the applicant be heard on the 20th day of July 1931 and that the said applicant do attend to be examined by this Court on that date.

S. N. ROY, Sub-Judge.

Alipore, the 18th June 1931. (1332—1—1483)

In the 4th Court of the Sub-Judge of 24-Parganas.

INSOLVENCY CASE No. 228 OF 1931.

Balai Chand Addy of 13, Baloram Bose 1st Lane, police-station Bhawanipur, district 24-Parganas, applicant.

To Ayub Khan Kabuli of Paddapukur South Road, Entally, district 24-Parganas, and others, creditors.

ON the 17th day of June 1931 it was ordered that the matter of the petition of the applicant be heard on the 20th day of July 1931 and that the said applicant do attend to be examined by this Court on that date.

S. N. ROY, Sub-Judge.

Alipore, the 20th June 1931. (1333—1—1484)

In the 4th Court of the Sub-Judge of 24-Parganas.

INSOLVENCY CASE No. 141 OF 1931.

Golam Bari Sarkar of Garagacha, district 24-Parganas, creditor-applicant.

To Gogan Chand Mahapatra of 32-11, Barrackpore Trunk Road, Cossipore, district 24-Parganas, debtor.

ON the 22nd day of June 1931, it was ordered that the matter of the petition of the applicant be heard on the 20th day of July 1931 and that the said applicant do attend to be examined by this Court on that date.

S. N. ROY, Sub-Judge.

Alipore, the 24th June 1931. (1379—1—1421)

In the 4th Court of the Sub-Judge of 24-Parganas.

INSOLVENCY CASE No. 213 OF 1931.

Sm. Kusum Bewa, widow of Dukhiram Das of Shampur, police-station Budge-Budge, district 24-Parganas, applicant.

To Nanda Kumar Biswas of Kismat Nangi, post-office Budge-Budge, and others, creditors.

ON the 23rd day of June 1931, it was ordered that the matter of the petition of the applicant be heard on the 3rd day of August 1931 and that the said applicant do attend to be examined by this Court on that date.

S. N. ROY, Sub-Judge.

Alipore, the 25th June 1931. (1381—1—1422)

In the 4th Court of the Sub-Judge of 24-Parganas.

INSOLVENCY CASE No. 227 OF 1931.

Ajijar Rahaman Molla of Dhopapara, police-station Motiabruz, district 24-Parganas, applicant.

To Syed Mahammad Khan Kabuli of Motiabruz, district 24-Parganas, and others, creditors.

ON the 20th day of June 1931, it was ordered that the matter of the petition of the applicant be heard on the 3rd day of August 1931 and that the said applicant do attend to be examined by this Court on that date.

S. N. ROY, Sub-Judge.

Alipore, the 25th June 1931. (1382—1—1423)

In the 4th Court of the Sub-Judge of 24-Parganas.

INSOLVENCY CASE No. 239 OF 1931.

Abdul Kader of 37, Ice Factory Lane, police-station Beniapukur, district 24-Parganas, applicant.

To Yusuf Brothers of 146-3, Lower Chitpore Road, Yakub Building, Calcutta, and others, creditors.

ON the 24th day of June 1931, it was ordered that the matter of the petition of the applicant be heard on the 3rd day of August 1931 and that the said applicant do attend to be examined by this Court on that date.

S. N. ROY, Sub-Judge.

Alipore, the 25th June 1931. (1383—1—1424)

In the 4th Court of the Sub-Judge of 24-Parganas.

INSOLVENCY CASE No. 240 OF 1931.

Mahammad Hanif of Agapur, police-station Baduria, district 24-Parganas, applicant.

To Raghubardayal Kshetri of 207-3, Harrison Road, Calcutta, and another, creditors.

ON the 23rd day of June 1931, it was ordered that the matter of the petition of the applicant be heard on the 3rd day of August 1931 and that the said applicant do attend to be examined by this Court on that date.

S. N. ROY, Sub-Judge.

Alipore, the 25th June 1931. (1384—1—1425)

In the 4th Court of the Sub-Judge of 24-Parganas.

INSOLVENCY CASE No. 241 OF 1931.

H. N. Khanna of 5-2, Mominpur Road, Kiddorpore, applicant.

To Mohammad Azim Khan of 13, Gurdas Lane, Watgunge, district 24-Parganas, creditor.

ON the 16th day of June 1931, it was ordered that the matter of the petition of the applicant be heard on the 3rd day of August 1931 and that the said applicant do attend to be examined by this Court on that date.

S. N. ROY, Sub-Judge.

Alipore, the 26th June 1931. (1385—1—1426)

In the 4th Court of the Sub-Judge of 24-Parganas.

INSOLVENCY CASE No. 242 OF 1931.

Gafur Kunj Ray of Titagarh Old Market, police-station Titagarh, district 24-Parganas, applicant.

To Gani Khan of Titagarh, district 24-Parganas, and others, creditors.

ON the 23rd day of June 1931, it was ordered that the matter of the petition of the applicant be heard on the 3rd day of August 1931 and that the said applicant do attend to be examined by this Court on that date.

S. N. ROY, Sub-Judge.

Alipore, the 25th June 1931. (1386—1—1427)

In the 4th Court of the Sub-Judge of 24-Parganas.

INSOLVENCY CASE No. 243 OF 1931.

Shivanondo Dikshit of 16, Garcha 2nd Lane, police-station Ballygunge, district 24-Parganas, applicant.

To Gouri Sankar Lalla of 39, Beltola Road, post-office Kalighat, and others, creditors.

ON the 23rd day of June 1931, it was ordered that the matter of the petition of the applicant be heard on the 3rd day of August 1931 and that the said applicant do attend to be examined by this Court on that date.

S. N. ROY, Sub-Judge.

Alipore, the 25th June 1931. (1387—1—1428)

In the 4th Court of the Sub-Judge of 24-Parganas.

INSOLVENCY CASE No. 244 OF 1931.

Mani Lal Ray Chowdhury of 46-22, Gariahata Road, police-station Ballygunge, district 24-Parganas, applicant.

To Radharani Dassi *alias* Feroza Begum of 3, Sreenath Das Lane, Calcutta, and others, creditors.

ON the 24th day of June 1931, it was ordered that the matter of the petition of the applicant be heard on the 3rd day of August 1931 and that the said applicant do attend to be examined by this Court on that date.

S. N. ROY, Sub-Judge.

Alipore, the 26th June 1931. (1388—1—1429)

In the 4th Court of the Sub-Judge of 24-Parganas.

INSOLVENCY CASE No. 245 OF 1931.

Kalicharan Saha of Gopalpur, police-station Haroa, district 24-Parganas, applicant.

To Hari Gopal Saha of Gopalpur, police-station Haroa, district 24-Parganas, and others, creditors.

ON the 24th day of June 1931, it was ordered that the matter of the petition of the applicant be heard on the 3rd day of August 1931 and that the said applicant do attend to be examined by this Court on that date.

S. N. ROY, Sub-Judge.

Alipore, the 26th June 1931. (1389—1—1430)

In the 4th Court of the Sub-Judge of 24-Parganas.

INSOLVENCY CASE No. 246 OF 1931.

Gour Chandra Das of 1-3, Maniktola Road, police-station Beliaghata, district 24-Parganas, applicant.

To Mahendra Nath Srimani of 17, Sukea Street, Calcutta, and another, creditors.

ON the 24th day of June 1931, it was ordered that the matter of the petition of the applicant be heard on the 3rd day of August 1931 and that the said applicant do attend to be examined by this Court on that date.

S. N. ROY, Sub-Judge.

Alipore, the 26th June 1931. (1390—1—1431)

In the 4th Court of the Sub-Judge of 24-Parganas.

INSOLVENCY CASE No. 247 OF 1931.

Jatindra Nath Ghose of Tellari, police-station Budge-Budge, district 24-Parganas, applicant.

To Sham Lal Sircar of 2, Rajnarain Biswas Lane, post-office Baghbazar, Calcutta, and others, creditors.

ON the 24th day of June 1931, it was ordered that the matter of the petition of the applicant be heard on the 3rd day of August 1931 and that the said applicant do attend to be examined by this Court on that date.

S. N. ROY, Sub-Judge.

Alipore, the 26th June 1931. (1391—1—1432)

ORDER OF ADJUDICATION.

Section 27 of the Provincial Insolvency Act, V of 1920.

In the 4th Court of the Sub-Judge at Alipore.

INSOLVENCY APPLICATION No. 407 OF 1930.

PURSUANT to a petition, dated 26th November 1930, filed by Isub Molla of Santoshpur, Maheshtolla, 24-Parganas, debtor, and on the application of the debtor himself and on reading his application and hearing his pleader, it is ordered that the debtor be and the said debtor is hereby adjudged insolvent.

It is further ordered that the debtor do apply for his discharge within six months from this date.

Dated this 23rd day of June 1931.

S. N. ROY, Sub-Judge.

(1407—1 -1459)

ORDER OF ADJUDICATION.

Section 27 of the Provincial Insolvency Act, V of 1920.

In the 4th Court of the Sub-Judge at Alipore.

INSOLVENCY APPLICATION No. 6 OF 1931.

PURSUANT to a petition, dated 5th January 1931, filed by Nabi Bux of Puranbazar, Titagarh, police-station Titagarh, district 24-Parganas, debtor, and on the application of the debtor himself and on reading his application and hearing his pleader, it is ordered that the debtor be and the said debtor is hereby adjudged insolvent.

It is further ordered that the debtor do apply for his discharge within six months from this date.

Dated this 23rd day of June 1931.

S. N. ROY, Sub-Judge.

(1408—1—1460)

ORDER OF ADJUDICATION.

Section 27 of the Provincial Insolvency Act, V of 1920.

In the 4th Court of the Sub-Judge at Alipore.

INSOLVENCY APPLICATION No. 30 OF 1931.

PURSUANT to a petition, dated 17th January 1931, filed by Belat Ali Sardar of Baje Naipur, police-station Tollygunge, district 24-Parganas, debtor, and on the application of the debtor himself and on reading his application and hearing his pleader, it is ordered that the debtor be and the said debtor is hereby adjudged insolvent.

It is further ordered that the debtor do apply for his discharge within six months from this date.

Dated this 23rd day of June 1931.

S. N. ROY, Sub-Judge.

(1409—1—1461)

ORDER OF ADJUDICATION.

Section 27 of the Provincial Insolvency Act, V of 1920.

In the 4th Court of the Sub-Judge at Alipore.

INSOLVENCY APPLICATION No. 87 OF 1931.

PURSUANT to a petition, dated 26th February 1931, filed by Naimaddin of 14, Watgunge Street, Kidderpore, district 24-Parganas, debtor, and on the application of the debtor himself and on reading his application and hearing his pleader, it is ordered that the debtor be and the said debtor is hereby adjudged insolvent.

It is further ordered that the debtor do apply for his discharge within six months from this date.

Dated this 23rd day of June 1931.

S. N. ROY, Sub-Judge.

(1410—1—1462)

ORDER OF ADJUDICATION.

Section 27 of the Provincial Insolvency Act, V of 1920.

In the 4th Court of the Sub-Judge at Alipore.

INSOLVENCY APPLICATION No. 93 OF 1931.

PURSUANT to a petition, dated 3rd March 1931, filed by Sheik Mobarak Hossain of 28, Fulbagan Road, police-station Beniapukur, debtor, and on the application of the debtor himself and on reading his application and hearing his pleader, it is ordered that the debtor be and the said debtor is hereby adjudged insolvent.

It is further ordered that the debtor do apply for his discharge within six months from this date.

Dated this 24th day of June 1931.

S. N. ROY, Sub-Judge.

(1411—1—1463)

ORDER OF ADJUDICATION.

Section 27 of the Provincial Insolvency Act, V of 1920.

In the 4th Court of the Sub-Judge at Alipore.

INSOLVENCY APPLICATION No. 111 OF 1931.

PURSUANT to a petition, dated 13th March 1931, filed by Kalipada De and Netai Chand De, two brothers as partners at Banshidharpur, Telipara, Joynagore, 24-Parganas, debtors, and on the application of the debtors themselves and on reading their application and hearing their pleador, it is ordered that the debtors be and the said debtors are hereby adjudged insolvent.

It is further ordered that the debtors do apply for their discharge within six months from this date.

Dated this 23rd day of June 1931.

S. N. ROY, Sub-Judge.

(1412—1—1464)

ORDER OF ADJUDICATION.

Section 27 of the Provincial Insolvency Act, V of 1920.

In the 4th Court of the Sub-Judge at Alipore.

INSOLVENCY APPLICATION No. 115 OF 1931.

PURSUANT to a petition, dated 19th March 1931, filed by Jogendranath Naskar of Bela Durganagore, Joynagore, 24-Parganas, debtor, and on the application of the debtor himself and on reading his application and hearing his pleader, it is ordered that the debtor be and the said debtor is hereby adjudged insolvent.

It is further ordered that the debtor do apply for his discharge within six months from this date.

Dated this 23rd day of June 1931.

S. N. ROY, Sub-Judge.

(1413—1—1465)

ORDER OF ADJUDICATION.

Section 27 of the Provincial Insolvency Act, V of 1920.

In the 4th Court of the Sub-Judge at Alipore.

INSOLVENCY APPLICATION No. 134 OF 1931.

PURSUANT to a petition, dated 7th April 1931, filed by Hari Charan Mondal of Chanak, Titagarh, 24-Parganas, debtor, and on the application of the debtor himself and on reading his application and hearing his pleador, it is ordered that the debtor be and the said debtor is hereby adjudged insolvent.

It is further ordered that the debtor do apply for his discharge within six months from this date.

Dated this 23rd day of June 1931.

S. N. ROY, Sub-Judge.

(1414—1—1466)

ORDER OF ADJUDICATION.

Section 27 of the Provincial Insolvency Act, V of 1920.

In the 4th Court of the Sub-Judge at Alipore.

INSOLVENCY APPLICATION No. 56 OF 1931.

PURSUANT to a petition, dated 4th February 1931, filed by Sambhu Charan Das of 104, Narikeldanga Main Road, Beliaghata, 24-Parganas, debtor, and on the application of the debtor himself and on reading his application and hearing his pleader, it is ordered that the debtor be and the said debtor is hereby adjudged insolvent.

It is further ordered that the debtor do apply for his discharge within six months from this date.

Dated this 30th day of June 1931.

S. N. ROY, Sub-Judge.

(1415—1—1456)

ORDER OF ADJUDICATION.

Section 27 of the Provincial Insolvency Act, V of 1920.

In the 4th Court of the Sub-Judge at Alipore.

INSOLVENCY APPLICATION No. 138 OF 1931.

PURSUANT to a petition, dated 8th April 1931, filed by S. Jordon of 4, Lansdowne Road, Bhowanipore, 24-Parganas, debtor, and on the application of the debtor himself and on reading his application and hearing his pleader, it is ordered that the debtor be and the said debtor is hereby adjudged insolvent.

It is further ordered that the debtor do apply for his discharge within six months from this date.

Dated this 30th day of June 1931.

S. N. ROY, Sub-Judge.

(1416—1—1457)

ORDER OF ADJUDICATION.

Section 27 of the Provincial Insolvency Act, V of 1920.

In the 4th Court of the Sub-Judge at Alipore.

INSOLVENCY APPLICATION No. 150 OF 1931.

PURSUANT to a petition, dated 15th April 1931, filed by Sheik Mohammad Siddiq of 11, Hossainsha Road, Kidderpore, 24-Parganas, debtor, and on the application of the debtor himself and on reading his application and hearing his pleador, it is ordered that the debtor be and the said debtor is hereby adjudged insolvent.

It is further ordered that the debtor do apply for his discharge within six months from this date.

Dated this 30th day of June 1931.

S. N. ROY, Sub-Judge.

(1417—1—1472)

ORDER OF ADJUDICATION.

Section 27 of the Provincial Insolvency Act, V of 1920.

In the 4th Court of the Sub-Judge at Alipore.

INSOLVENCY APPLICATION No. 152 OF 1931.

PURSUANT to a petition, dated 17th April 1931, filed by Aswini Kumar Basu of 1, Onrait 2nd Lane, Entally, 24-Parganas, debtor, and on the application of the debtor himself and on reading his application and hearing his pleader, it is ordered that the debtor be and the said debtor is hereby adjudged insolvent.

It is further ordered that the debtor do apply for his discharge within six months from this date.

Dated this 30th day of June 1931.

S. N. ROY, Sub-Judge.

(1418—1—1473)

In the 4th Court of the Sub-Judge of 24-Parganas.

INSOLVENCY CASE No. 231 OF 1931.

Nama Panjabi of No. 4 Bridge, Tiljala, applicant.

To Omaroddin Kabuli and Saheb Khan Kabuli and others, creditors.

ON the 26th day of June 1931 it was ordered that the matter of the petition of the applicant be heard on the 10th day of August 1931 and that the said applicant do attend to be examined by this Court on that date.

S. N. ROY, Sub-Judge.

Alipore, the 29th June 1931. (1419—1—1474)

In the 4th Court of the Sub-Judge of 24-Parganas.

INSOLVENCY CASE No. 232 OF 1931.

Sheik Kinu of Mehadi Bagan, Tollygunge, 24-Parganas, applicant.

To Dat Khan of Prince Anwar Sha Road, Tollygunge, Calcutta, and others, creditors.

ON the 26th day of June 1931, it was ordered that the matter of the petition of the applicant be heard on the 10th day of August 1931 and that the said applicant do attend to be examined by this Court on that date.

S. N. ROY, Sub-Judge.

Alipore, the 29th June 1931. (1420—1—1475)

In the 4th Court of the Sub-Judge of 24-Parganas.

INSOLVENCY CASE No. 238 OF 1931.

Netai Chand Ghosh, Plot No. 7, Scheme No. XVB, Kalighat, Calcutta, applicant.

To Narsing Das Agarwala, c-o Babu Panchanon Bhattacharjee, Pleader, Small Cause Court, Calcutta, and others, creditors.

ON the 27th day of June 1931, it was ordered that the matter of the petition of the applicant be heard on the 10th day of August 1931 and that the said applicant do attend to be examined by this Court on that date.

S. N. ROY, Sub-Judge.

Alipore, the 30th June 1931. (1421—1—1476)

In the 4th Court of the Sub-Judge of 24-Parganas.

INSOLVENCY CASE No. 248 OF 1931.

Ganes Dass Brahmin, Kutighat, Baranagore, applicant.

To Chuni Lall Labhchand, 211, Harrison Road, Calcutta, and others, creditors.

ON the 19th day of June 1931, it was ordered that the matter of the petition of the applicant be heard on the 10th day of August 1931 and that the said applicant do attend to be examined by this Court on that date.

S. N. ROY, Sub-Judge.

Alipore, the 2nd July 1931. (1422—1—1477)

In the 4th Court of the Sub-Judge of 24-Parganas.

INSOLVENCY CASE No. 250 OF 1931.

Sarat Chandra Pall, Chanditola, police-station Behala, 24-Parganas, applicant.

Profulla Kumar Mondal, Itelghata, police-station Behala, and others, creditors.

ON the 19th day of June 1931, it was ordered that the matter of the petition of the applicant be heard on the 10th day of August 1931, and that the said applicant do attend to be examined by this Court on that date.

S. N. ROY, Sub-Judge.

Alipore, the 2nd July 1931. (1423—1—1458)

NOTICE TO CREDITORS OF APPLICATION FOR DISCHARGE.

Section 41(*1*) of the Provincial Insolvency Act, V of 1920.

In the Court of the District Judge at Alipore.

INSOLVENCY CASE No. 22 OF 1929.

Chand Bullav Kundu of 6, Baloram Bose's 1st Lane, Bhowanipore, applicant.

TAKE notice that the abovenamed insolvent has applied at the Court for his discharge, and that the Court has fixed the 20th day of July 1931 at 11 o'clock for hearing the application.

Dated this 29th day of June 1931.

R. R. GARLICK, District Judge.

(1396—1—1454)

ORDER OF ADJUDICATION.

Section 27 of the Provincial Insolvency Act, V of 1920.

In the Court of the District Judge at Alipore.

INSOLVENCY APPLICATION No. 24 OF 1931.

PURSUANT to a petition, dated 27th April 1931, filed by A. C. Chakravarty *alias* Ashutosh Chakravarty of Khardah, 24-Parganas, debtor, and on the application of the debtor himself and on reading his application and hearing his pleader, it is ordered that the debtor be and the said debtor is hereby adjudged insolvent.

It is further ordered that the debtor do apply for his discharge in a year's time from this date.

Dated this 22nd day of June 1931.

R. R. GARLICK, District Judge.

(1397—1—1455)

ORDER OF DISCHARGE.

Section 41 (*2*) (*a*) of the Provincial Insolvency Act.

In the Court of the District Judge of 24-Parganas at Alipore.

INSOLVENCY CASE No. 19 OF 1920.

Mahammad Altaf Hossain, applicant.

ON the application of Mohammad Altaf Hossain of 3-40, Narkeldanga Main Road, adjudged insolvent on the 17th May 1929, and taking into consideration the insolvent's conduct and affairs, it is ordered that the insolvent be and the said insolvent is hereby discharged on 30th March 1931.

R. R. GARLICK, District Judge.

Alipore, the 30th June 1931. (1404—1—1453)

BABU JITENDRANATH GUHA, M.A., B.L., intends to be enrolled as an Advocate, High Court, Calcutta.

(1478—4—1470)

KRISHNAPADA CHATTERJEE, B.L., intends to be enrolled as an advocate of the Calcutta High Court.

(1268—4—1278)

APPLICATIONS are invited for the post of Confidential Clerk and Stenographer under the District Magistrate of Faridpur on a scale of pay of Rs. 80—4—140—5—160 per mensem. Candidates must be capable of taking down shorthand notes from dictation at the rate of 120 words a minute. Preference will be given to graduates who have passed the final examination in shorthand from the Government Commercial Institute, Calcutta, and who have office experience. Applications with testimonials will be received by the undersigned up to the 31st July 1931. Selected candidates may be called for an interview.

A. C. DATTA, District Magistrate.

Faridpur, the 3rd July 1931.

Office of the Inspectress of Schools, Dacca Circle.

APPLICATIONS are invited for the post of a clerk, office of the Assistant Inspectress of Schools, Rajshahi, Division (Rajshahi), or of that of the Assistant Inspectress of Schools, Chittagong Division (Chittagong), on a monthly pay of Rs. 35 in the grade of Rs. 35—35—40—2-2—60.

2. None need apply who has not passed the I.A. or I.Sc. Examination of the Indian Universities.

3. The applications must be in handwriting of the candidates and copies of University certificates, especially of the Matriculation and Intermediate Examinations, as also of certificates of good moral character from the colleges in which they have last educated must accompany the applications.

4. Preference will be given to Muhammadan candidates or candidates of backward and other communities with high University qualifications. Knowledge of typewriting is essential.

5. Applications will be received by the undersigned up to the 30th June 1931, inclusive.

M. V. WOODTHORPE,
Inspectress of Schools, Dacca Circle.

Ramna, Dacca, the 6th June 1931.

APPLICATIONS are invited for the post of Superintendent, Reformatory and Industrial Schools, Alipore. The necessary qualifications for the post are—

"Broad education with clearly established interest in social work. Special knowledge either in workshop training or teaching with special qualifications in vocational work."

Candidates should be acquainted with the Literature of juvenile delinquency and abnormal mentality, must be of the highest personal character and be in sympathy with this type of boy.

The scale of pay sanctioned for the post is Rs. 250—250—300—40-2—500—50-2—800 with efficiency bars at Rs. 460 and Rs. 650.

Applications should be submitted in quadruplicate with necessary testimonials to the Director of Public Instruction, Bengal, Writers' Buildings, Calcutta, before 31st July 1931.

WANTED a temporary Professor of Philosophy for the Bethnue College, Calcutta, in the Women's Branch of the Bengal Educational Service in the scale of Rs. 200—200—25-2—325 (efficiency bar)—25-2—500.

2. Candidates, who should be British subjects, should hold a first or second class M. A. degree in Philosophy of an Indian University, or a good Honours degree of a European University and should have satisfactory evidence of teaching experience.

3. Applications with documentary evidence of the qualifications possessed will be received up to the 20th August 1931 by the Principal, Bethune College, Calcutta.

WANTED a competent stenographer for the office of District Judge of Bakarganj on a salary of Rs. 70—4—130—5—150 per mensem. Preference will be given to the candidate who has sufficient knowledge of English and thorough experience of the work. Applications with testimonials will be received by the undersigned up to 21st July 1931.

T. H. ELLIS, District Judge.

Barisal, the 6th July 1931.

THE following staff is required for the General Cess Revaluation operations of the district, which will start very shortly :—

1 Supervisor	..	at Rs.	80	per month.
5 Section clerks	..	,, ,,	40	each per month.
10 Muharrirs	..	,, ,,	30	each ,, ,,
1 Nazir	..	,, ,,	40	per month.
1 Assistant Nazir	..	,, ,,	30	,, ,,

The candidates must be duly qualified according to Board's rules and should apply with copies of testimonials and University Certificates.

Preference will be given to candidates having experience of the Revaluation work.

Applications will be received by the undersigned up to 27th instant.

G. S. DUTT, District Officer, Birbhum.

Suri, the 11th July 1931.

Imperial Bank of India.

THE following changes in the Bank's Staff are hereby notified :—

Mr. H. M. Wigley to be Chief Cashier as from 30th June 1931, *vice* Mr. A. W. Stewart.

Mr. A. W. Stewart to be Deputy Superintendent, Public Debt Office, as from 1st July 1931, *vice* Mr. F. H. Godwin.

By order,
M. G. STUART,
Secretary and Treasurer.

Calcutta, the 4th July 1931. (1440—1)

THE Bengal and Madras Service Family Pension Fund which is provisionally managed and assisted by Government has for its object the provision of monthly pensions for the maintenance of the widows and children of subscribers and is open, with certain exceptions, to all active and pensioned members of the Uncovenanted service of Government (except those serving under the Government of Bombay), and to Local Fund servants earning pensions from Government. Some of the special features of the fund are—(1) that widowed daughters incapable of remarriage or children labouring under such mental or bodily infirmities as incapacitate them from earning their livelihood or preclude the possibility of marriage (in case of a daughter) are admitted to its benefits; and (2) that subscribers to the Widows' and Daughters' branches are entitled to a refund of 30 per cent. of the premia paid, should the nominee predecease them after five years of admission. The second quinquennial valuation of the Fund has been completed by the actuary to the Government of India, and his report discloses very favourable results. For forms of application and rules of the Fund apply to the Accountant-General, Bengal, Imperial Secretariat Buildings, Calcutta.

Notice to Creditors.

Estate Helen Love, deceased.

PURSUANT to section 360 of Act XXXIX of 1925 and section 42 of Act XXVIII of 1866, the creditors and all persons interested in the estate of Helen Love, late of Hawthorne, Campbeltown, Scotland, Spinster, who died at that address on or about the 21st day of September 1930 and Letters of Administration, with copy Will annexed, to whose estate were, on the 4th day of May 1931, granted by the High Court, Calcutta, with effect within the Province of Bengal, to Ian Hoyle Anderson of No. 16, Strand Road, Calcutta, are hereby required to submit particulars of the claims, with supporting vouchers, to the undersigned on or before the 7th day of August 1931, after which date the Administrator will proceed to distribute the assets of the estate, having regard only to the claims of which notice shall then have been received. All persons indebted to the estate are requested to make payment of their respective debts without delay.

ORR, DIGNAM & Co.,
Solicitors to the Administrator abovenamed.

32, Dalhousie Square, South, Calcutta, 3rd July 1931.
(1427—1—1433)

WHEREAS under sections 7 and 35 of the Wards' Act IX (B.C.) of 1879, as amended up to date, the Court of Wards has assumed charge of the private properties of Babu Satyendra Chandra Chaudhuri, proprietor of the Golokpur Ward's Estate.

Notice is hereby given under section 10A of the said Act that all creditors having claims against the said proprietor or his private immovable property are hereby required to submit the same in writing to the Collector of Mymensingh at his office at Mymensingh within six months from the date of publication of this notice.

Creditors are also hereby warned that claims not submitted as required by this notice are liable to be deemed to have been duly discharged/ceased to carry interest.

H. GRAHAM, Collector of Mymensingh.

Mymensingh, the 17th June 1931. (1405—3)

Currency Note.

PORTION of the following Note of the Calcutta Circle is stated to have been destroyed and payment of its value has been claimed by the person whose name is shown against the number.

Any other person claiming a right to it is warned to communicate at once with the undersigned—

Regd. No.	Note No.	Value.	Name and address of the claimant.
WD 5 of 31-32.	U/87 33295.	Rs. 1,000	Brigadier-General Rao Saheb Sarder Daulat Rao, General Officer Commanding, Mohitey, Dhar State Forces, Dhar, C. I.

B. C. DUTT, Currency Officer.

Currency Office, Calcutta, the 24th June 1931.

Currency Note.

A PORTION of the following Currency note of the Calcutta Circle of issue is stated to have been destroyed and payment of its value has been claimed by the person whose name is shown against the number.

Any other person claiming a right to it is warned to communicate at once with the undersigned :—

Regtd. No.	Note No.	Value.	Name and address of the claimant.
		Rs.	
W.D. 6 of 31-32.	S/64, 154930	100	Kanai Laul Ghosh, 5, Chatterji Lane, Bowbazar, Calcutta.

B. C. DUTT, Currency Officer.

Currency Office, Calcutta, the 3rd July 1931.

Currency Notes.

PORTIONS of the following Notes of the Calcutta Circle of issue are stated to have been destroyed and payment of their value has been claimed by the person whose name is shown against the numbers.

Any other person claiming a right to them is warned to communicate at once with the undersigned.

Registered No.	Note No.	Value.	Name and address of the claimant.
		Rs.	
WD. 7 of 31-32.	S-44,463698	100	Sadhu Charan Dey, 8, Shibu Thakur Lane, Barrabazar, Calcutta.
	S-44,730754	100	
	S-44,730755	100	
	S-44,833625	100	
	S-41,805014	100	
	S-52,294760	100	

B. C. DUTT, Currency Officer.

Currency Office, Calcutta, the 3rd June 1931.

Lost.

THE Government Promissory Note No. 310127 of the 3½ per cent. loan of 1865 for Rs. 3,000, originally standing in the name of Kedar Nath Das (now deceased), the proprietor, by whom it was never endorsed to any other person, having been lost, notice is hereby given that payment of the above note and the interest thereupon have been stopped at the Public Debt Office, Imperial Bank of India, Calcutta, and that application is about to be made for the issue of duplicate in favour of Tulsicharan Das and Sambhucharan Das, certificate holders to the estate of the abovenamed deceased. The public are cautioned against purchasing or otherwise dealing with the abovementioned security.

Name of the advertiser—Tulshicharan Das and Sambhucharan Das.

Address—211, Grand Trunk Road, Sibpur, Howrah.

(1270—3—1383)

Lost.

THE Calcutta Municipal Debenture Nos. 1068, 1081, 1086 of the 4 per cent. loan of 1901-02 for Rs. 5,000, originally standing in the name of Prosad Das Boral & Bros., and last endorsed to Rai Bahadur Ram Taran Banerjee, the proprietor, by whom they were never endorsed to any other person, having been lost, notice is hereby given that payment of the above debenture and the interest thereupon have been stopped at the Public Debt Office, Imperial Bank of India, Calcutta, and that application is about to be made for the issue of duplicates in favour of the proprietor. The public are cautioned against purchasing or otherwise dealing with the abovementioned debentures.

Name of the advertiser—Ram Taran Banerjee.

Residence—16, Hazra Road, p. o. Kalighat, Calcutta.

(1442—3—1469)

Lost.

A RECEIPT numbered 16924, dated 22nd June 1931, and granted by the Public Debt Office, Imperial Bank of India, on submission of the undermentioned Government Promissory Notes. Notice of loss has been given to the Public Debt Office, Imperial Bank of India, and the undersigned is about to apply for surrender of the securities—

G. P. Note No.	Loan.	Amount.	Holder's Name.
		Rs.	
332371-72	3½ per cent. 1900-01.	100 each	Sm. Punyabatee Chundra.
347001	ditto	100	
373182-83	3½ per cent. 1865.	100 each	

Name of the Proprietress—Sm. Punyabatee Chundra.

Residence—3H, Rupchand Roy's Street, Calcutta.

(1480—1—1485)

Stolen.

THE Government Promissory Note No. F001912 of the 6 per cent. Bonds, 1930, for Rs. 500, originally standing in the name of the Accountant-General, Posts and Telegraphs, and last endorsed to Basanta Kumari Dasi (now deceased), the proprietress, by whom it was never endorsed to any other person, having been stolen, notice is hereby given that payment of the above note and the interest thereupon have been stopped at the Public Debt Office, Imperial Bank of India, Calcutta, and that application is about to be made for the issue of duplicate in favour of Nikhilesh Chandra Das, minor, under the guardianship of Pramatha Nath Das. The public are cautioned against purchasing or otherwise dealing with the abovementioned security.

Name of the Advertiser—Pramatha Nath Das.

Residence—Panchakote Raj post-office (Manbhum).

(1344—3—1384)

In the matter of the Indian Companies Act, VII of 1913, and

In the matter of Messrs. Bell Taylor & Co. (India), Ltd. (in liquidation).

THE creditors of the abovenamed Company are required, on or before the 23rd day of July 1931, to send their names and addresses and the particulars of their debts or claims, and the names and addresses of their attorneys, if any, to Mr. R. Ray of 6, Church Lane, Calcutta, the Official Liquidator of the said Company, and if so required by notice in writing from the Official Liquidator, are in person or by their attorneys to come in and prove their said debts or claims at such time as shall be specified in such notice, or in default thereof they will be excluded from the benefit of any distribution made before such debts are proved.

R. RAY, Official Liquidator.

Calcutta, the 6th July 1931.

(1437—1)

In the matter of the Indian Companies Act, VII of 1913, and

In the matter of the Indo-German Trading Agency, Ltd. (in liquidation).

THE creditors of the abovenamed Company are required, on or before the 25th day of July 1931, to send their names and addresses and the particulars of their debts or claims, and the names and addresses of their attorneys, if any, to Mr. R. Ray of 6, Church Lane, Calcutta, the Official Liquidator of the said Company, and if so required by notice in writing from the Official Liquidator, are, in person or by their attorney, to come in and prove their said debts or claims at such time as shall be specified in such notice, or in default thereof they will be excluded from the benefit of any distribution made before such debts are proved.

R. RAY, Official Liquidator.

Calcutta, the 7th July 1931. (1442—1—1437)

In the matter of the Indian Companies Act, VII of 1913, and

In the matter of the Orissa Cement Company, Limited (in liquidation).

NOTICE is hereby given pursuant to section 217 of the Indian Companies Act, VII of 1913, that a general meeting of the members of the abovenamed Company will be held on Monday, the 17th day of August 1931, at 5-10 p.m., at 4, Lyons Range, Calcutta, in order that there may be laid before the said Company an account showing the manner in which the winding up has been conducted and the property of the Company disposed of, and to pass an extraordinary resolution as to the disposal of the books, accounts, and documents of the Company, and in order that the said Company may hear any explanation that may be given by the liquidators.

E. J. CARTER, *for* Self and Co-Liquidators.

Calcutta, the 7th July 1931. (1445—1—1438)

Imperial Library.

(Secretariat Buildings, 6, Esplanade East, Calcutta.)
Open on—

Weekdays and Saturdays from 10 A.M. to 7 P.M.
Sundays and Gazetted holidays from 2 P.M. to 5 P.M.

THE Imperial Library is also a Lending Library. It is free to all except children. There is no subscription to pay.

K. M. ASADULLAH, Librarian.

CINCHONA FACTORY PRODUCTS.

By order of the Government of Bengal Cinchona Factory Products as manufactured and packed at the Cinchona Factory, Mungpoo, Darjeeling district, will be sold and distributed by the **Superintendent, Presidency Jail,** *in original packages* as received from the Mungpoo Factory at the rates noted below **from the 1st May 1926** :—

Quinine Sulphate.

For 60 lbs. and upwards at a time ..	Rs. 18 per lb.
For 6 lbs. and over but less than 60 lbs. at a time	„ 19 „
For any quantity less than 6 lbs. ..	„ 20 „

Quinine Hydrochloride.

For 60 lbs. and upwards at a time ..	Rs. 23 per lb.
For 6 lbs. and over but less than 60 lbs. at a time	„ 24 „
For any quantity less than 6 lbs ..	„ 25 „

Quinine Di-Hydrochlor.

For 60 lbs. and upwards at a time ..	Rs. 25 per lb.
For 6 lbs. and over but less than 60 lbs. at a time	„ 26 „
For any quantity less than 6 lbs. ..	„ 27 „

Quinidine Sulphate.

For 60 lbs. and upwards at a time ..	Rs. 20 per lb.
For 6 lbs. and over but less than 60 lbs. at a time	„ 21 „
For any quantity less than 6 lbs. ..	„ 22 „

Cinchonidine Sulphate.

For 60 lbs. and upwards at a time ..	Rs. 25 per lb.
For 6 lbs. and over but less than 60 lbs. at a time	„ 26 „
For any quantity less than 6 lbs ..	„ 27 „

Cinchonine Sulphate.

For 60 lbs. and upwards at a time ..	Rs. 12 per lb.
For 6 lbs. and over but less than 60 lbs. at a time	„ 13 „
For any quantity less than 6 lbs. ..	„ 14 „

Cinchona Febrifuge (Powder).

For 6 lbs. and over at a time ..	Rs. 9 per lb.
For any quantity less than 6 lbs. ..	„ 10 „

Cinchona Febrifuge (Tablets).

For 6 lbs. and over at a time ..	Rs. 10 per lb.
For any quantity less than 6 lbs. ..	„ 11 „

Quinoidine (Tablets).

For 6 lbs. and over at a time ..	Rs. 5 per lb.
For any quantity less than 6 lbs. ..	„ 6 „

Quinoidine (in Mass).

For 6 lbs. and over at a time ..	Rs. 4 per lb.
For any quantity less than 6 lbs. ..	„ 5 „

Cinchona Bark (in 50 pound original bags).

Per bag .. .. .. Rs 25.

Transit charges extra in every case.

Quinine Sulphate is for sale to Government Institutions and Missionaries only. It is not for sale to Private Firms or the General Public.

Cinchona Febrifuge in Powder and Tablet form (when in stock) is for sale to Government Institutions, Missionaries and the General Public.

Quinine Sulphate will be supplied to Hospitals and Dispensaries of this Presidency only at the wholesale rate of Rs. 18 per lb., irrespective of quantities. For all other purchasers the rates given above will apply.

Provinces other than Bengal, Bihar and Orissa and Assam will get their supplies of Sulph. Quinine from the Director, Botanical Survey of India, Sibpur, Howrah.

Local sale at the jail gate from 2 to 4 p.m.

The system of payment is by—*Cash in advance*—by "*Treasury Chalans*," which should accompany the order or indent.

In cases where this is not possible, payment should be made by "*Remittance Transfer Receipts*" or crossed "*Cheques.*"

Indents unaccompanied by cash in advance will be sent Value Payable Post. Credit sale is not allowed except under special circumstances.

In the case of *Government officers* payment will be recovered by *Book Transfer, i.e., Countersigned Invoices* in the event of *Cash* not accompanying the indent by "*Treasury Chalans*," *Remittance Transfer Receipts* or *Cheque.*

2. Price and postage must accompany the price of the drug (when the drug is required by post).

3. The name of the Railway and Steamer Station or Post Office must be written distinctly when the parcels are required by Rail, Steamer or Post. *Railway parcels are sent by passenger train only.*

4. A scale of postage is given below :—

For ¼ lb. 4 annas, ½ lb. 5 annas, 1 lb. 8 annas, 1½ lbs. 11 annas, 2 lbs. 14 annas, 2½ lbs. Re. 1-1, 3 lbs. Re. 1-1, 3½ lbs. Re. 1-4, 4 lbs. Re. 1-7, 5 lbs. Re. 1-13, 5½ lbs. Re. 1-13, 6 lbs. Rs. 2.

Two different drugs are not packed in the same parcel and postage must be paid separately for each kind.

N.B.—Postage stamps are not accepted as revenue.

Government reserve the right to alter the price without notice.

Appendix to

The Calcutta Gazette

THURSDAY, JULY 16, 1931.

List of Common and Special Jurors for the year 1931

District 24-Parganas

List of Common Jurors for the year 1931 (European)

It is notified that objections to the following list of Common Jurors for the district of the 24-Parganas for the year 1931 will be heard and determined by the Sessions Judge and Collector of the district at the Sessions Court at 12 noon on 29th August 1931.

Serial No.	Name.	Thana.	Place of abode—Village, road or street.	Nationality.	Quality or occupation.
	A				
1(S)	Andrew, D D	Jagatdal	Ripon Street Tower	Armenian	Manager, North Mill.
2	Agustin, H	Entally	11-1, Canal Street	Anglo-Indian	Printer, E B Ry Press.
3(S)	Ara, A G	Maniktala	15, Canal East Road	American	Manager, J Ç Galstaun, Esq.
4	Aratoon, V N	Bhowanipore	234-4, Lower Circular Road	European	Merchant, Jardine Skinner & Co.
5(S)	Augier, C S	Chitpur	13, Kali Prasanna Singh Road	Anglo-Indian	Manager, Bengal Hydraulic Press.
6	Ausell, C W H	Bhowanipore	235-2, Lower Circular Road	European	Merchant.
	B				
7(S)	Barnes, O J	Alipore	1, Hastings Park	European	Service holder, Hongkong Bank.
8	Battersby, C R	Chetla	38, Gopalnagore Road	do	Superintendent, Bengal Government Press.
9(S)	Baker, W H	Watgunge	40, Ekbalpore Road	do	Assistant, Graham & Co., Shipping Department.
10	Barber, H O	Garden Reach	43, Garden Reach Road	do	Head Time-keeper, Garden Reach Workshop.
11	Barraw, D	ditto	ditto	do	Carpenter, Garden Reach Workshop.
12	Barrett, T A	Budge-Budge	Budge-Budge	do	Superintendent, Indo-Burmah Petroleum & Co., Ld.
13	Beattie, J	Garden Reach	Fort William Jute Mill	do	Preparing Assistant.

14	Becoffs, J H	Beliaghata	13, Canal West Road	do		Superintendent, Oriental Gas Co.
15	Black, W	Titagarh	Standard Jute Mill, Titagarh	do		Weaving Overseer.
16	Blyth, V	Entally	27, Convent Road	Anglo-Indian		Assistant Mackintosh, Burn & Co.
17	Boid, J	Garden Reach	61, Garden Reach Road	European		Engineer, Garden Reach Workshop.
18	Blair, F	Jagatdal	Alliance Jute Mill	do		Senior Assistant.
19	Burman, H P	Bijpore	Officer's Colony, Kanchrapara	do		District Electrical Engineer.
	C					
20	Carter, E	Entally	8-4, Canal Street	European		Merchant.
21	Champbell, A W	Jagatdal	Jagatdal	do		Assistant to the European staff of Alexandra Jute Mill.
22	Connolley, H	Entally	8-3, Canal Street	Anglo-Indian		Assistant, Jessop & Co.
23(S)	Conway, C	Watgunge	16, Pipe Road	do		Foreman, P P Hydraulic Power House, Kidderpore.
24(S)	Cooper, G	Dum-Dum	Dum-Dum, 24-Parganas	European		Manager, Gramophone Co.
25	Corr, James	Budge-Budge	Budge-Budge	do		Manager, Albion Jute Mills, Budge-Budge.
26	Coupar, A B	Jagatdal	Reliance Jute Mill	do		Engineer.
27	Craig, G	Naihati	Hukum Chand Jute Mill, Naihati	do		Assistant.
28	Cruckshank, S	Baranagore	Kankinara Jute Mills	do		Engineer.
29	Cunningham, W	Budge-Budge	Chittragunj	do		Office Master, Cheviot Jute Mills, Chittragunj.

rial No.	Name.	Thana.	Place of abode—Village, road or street.	Nationality.	Quality or occupation.
	D				
30(S)	Debri, B ..	.. Entally ..	.. 1, Canal Street	.. European	.. Assistant, R S N and Co.
31(S)	Doranjo, C J ..	.. Dum-Dum ..	.. Military Works, Bungalow No. 30, Dum-Dum Cantonment.	.. Anglo-Indian	.. Accountant, C R E's Office, Fort William.
32	Dick, J ..	.. Khardah ..	.. Khardah Jute Mill	.. European	.. Spinning Master, Khardah Jute Mill.
33	Divan, K ..	.. Entally ..	.. 15, Convent Road	.. Anglo-Indian	.. Assistant, E B Ry.
34	Dollas, J ..	.. Garden Reach ..	.. 43, Garden Reach Road	.. European	.. Foreman, Garden Reach Workshop.
35	Donald, A ..	.. Baranagore ..	.. Kamarhati Jute Mills "A"	.. do ..	.. Assistant Manager.
	E				
36	Elder, P W ..	.. Khardah ..	.. Khardah Jute Mill	.. European	.. Overseer, Khardah Jute Mill.
37	Elmes, W J ..	.. Bijpore ..	.. E B Ry Colony, Bijpore	.. do or Anglo-Indian.	Kanchrapara Carriage Construction Foreman, E B Ry.
	F				
38(S)	Finlay, W ..	.. Budge-Budge ..	.. Kalipur, P O Achipur	.. European	.. Manager, Orient Jute Mills.
39	Franklin, V E ..	.. Baranagore ..	.. Marshall Sons & Co.	.. do ..	.. Superintendent, Drawing Office.
40	Francis, R ..	.. Entally ..	.. 41, Ismail Street	.. Anglo-Indian	.. Businessman.
41	Freemault, G ..	.. Garden Reach ..	.. 28-4, Garden Reach Road	.. European	.. Engineer.
42	Ferguson, Geo. M ..	.. ditto ..	.. 43, Garden Reach Road	.. do ..	.. Plaiter, Garden Reach Workshop.

G

43(S)	Gahan, E C J	Garden Reach	15, Garden Reach Road	European		Commercial Traffic Manager, B N Ry
44	Gartner, Van	Beliaghata	Ice Association Factory, 3 Gas Street, Narkeldanga.	Anglo-Indian		Engineer.
45(S)	Gay, H E	Entally	14-1, Convent Road	European		Assistant, Houghton & Sons.
46	Godfry, R G D	Garden Reach	43, Garden Reach Road	do		Jute Overseer, Clive Jute Mill
47	Grain, R	Bijpore	E B Ry Colony, Bijpore	do	or Anglo-Indian	Inspector, Station Committee, E B Ry, Kanchrapara

H

48	Hosburg, J M	Bhowanipore	3, Lansdown Road	European		Merchant.
49	Harper, W	Titagarh	Titagarh	do		Assistant, Kinnison Jute Mill.
50	Hay, D	ditto	Standard Jute Mill, Titagarh	do		Mill Mechanic.
51	Harvey, A F	Alipore	8, Belvedere Park	do		Executive Engineer, E B Ry.
52(S)	Henderson, W M	Baranagore	Marshall Sons & Co	do		Works Manager.
53	Hawkins, E K	Garden Reach	11, Garden Reach Road	do		Chief Accountant, Chief Engineer's Office, B N Ry.
54	Hume, G	Entally	15, Convent Road	Anglo-Indian		Engineer, E I Ry.
55	Hutchinson, George Luke	Jagatdal	Anthpore	European		Assistant of Waverly Jute Mill.

I

56	Instance, S	Garden Reach	61, Garden Reach Road	European		Carpenter, Garden Reach Workshop.
57(S)	Instance, J A	ditto	ditto	do		ditto.

Serial No.	Name.	Thana.	Place of abode—Village, road or street.	Nationality.	Quality or occupation.
58	Jamieson, J J ..	Baranagore ..	.. Kamarhati Jute Mills "A"	.. European	.. Mill Clerk.
59(S)	Jellicoe, J J ..	.. Entally ..	.. 14-1, Convent Road ..	.. Anglo-Indian	.. Engineer.
60	Jaglekar, R B ..	.. Garden Reach ..	.. 72-2, Garden Reach Road	.. Marhatty	.. Stenographer, Chemical Traffic Manager's Office, B N Ry.
61(S)	Johnson, T F ..	.. Bhowanipore ..	.. 4, Lee Road ..	.. European	.. Assistant, Merchant Office.
62	Johnstone, J ..	.. Jagatdal ..	.. Reliance Jute Mill ..	.. do ..	.. Finishing Overseer.
63	Johnston, B R ..	.. Baranagore ..	.. Baranagore East Mill	.. do ..	.. Store Superintendent.
64	Johnston, D ..	.. ditto ..	.. ditto ..	.. do ..	.. Clerk.
65	Jones, A D ..	.. Kanchrapara ..	.. Bijpore Officers' Colony	.. do ..	.. Foreman, E B Ry.
	K				
66(S)	Kaddie, P ..	.. Titagarh ..	.. Kinnison Jute Mill	.. European	.. Manager and Honorary Magistrate.
67	Keith, D ..	.. Khardah ..	.. Titagarh Mill No. II, P O Titagarh	do ..	.. Factory Overseer.
68	Kilpatrick, R ..	.. Titagarh ..	.. Standard Jute Mill, Titagarh	.. do ..	.. Factory Mechanic.
69(S)	Kinnear, A R ..	.. Jagatdal ..	.. Jagatdal	.. do ..	.. Assistant Manager, Anglo-Indian Jute Mill No. 4.
	L				
70(S)	Lancaster, S Percy	.. Alipore ..	.. 1, Alipore Road	.. European	.. Secretary, Agricultural and Horticultural Society of India.
71	Lawden, J ..	.. Titagarh ..	.. Titagarh	.. do ..	.. Assistant Manager, Titagarh Jute Mill No. 2.

72	Law, Thomas ..	.. Jagatdal ..	.. Kankinara	.. do ..	.. Assistant, Kankinara Jute Mill.
73	Leake, F W ..	.. Ballygunj ..	.. 1, Merlyn Park	.. do ..	.. Merchant.
74(S)	Little, John ..	.. Jagatdal ..	.. Jagatdal	.. do ..	.. Manager, Anglo-Indian Jute Mill No. 4.
75(S)	Leslie, J H ..	.. Titagarh ..	.. Titagarh Mill No. 1	.. do ..	.. Assistant Manager, Titagarh Mill No. 1.
76(S)	Lourie, W ..	.. Baranagore ..	.. Kamarhati Jute Mill " B "	.. do ..	.. Chief Engineer.
77	Low, W H ..	.. Khardah ..	.. Khardah	.. do ..	.. Spinning Teacher, Titagarh Mill No. II.
78	Loren, R Mc ..	.. Baranagore ..	.. Kamarhati Jute Mill " B "	.. do ..	.. Engineer.
79	Lowden, W C ..	.. Jagatdal ..	.. Reliance Jute Mill	.. do ..	.. Mill Clerk.
80	Lowden, G ..	.. Baranagore ..	.. Kamarhati Jute Mill " B "	.. do ..	.. Assistant Manager.
81(S)	Lewis, C C ..	.. Bhowanipur .	.. 2, Canal Street	.. do ..	.. Assistant, Sanderson & Co.
	M				
82	McLaren, D ..	.. Beliaghata ..	.. 102, Narkeldanga Main Road	.. European	.. Superintendent, Sura Jute Mill.
83(S)	Macnab, J K ..	.. Budge-Budge ..	.. Budge-Budge ..	.. do ..	.. Manager, Lothian Mill, Budge Budge.
84	Macintosh, A ..	.. Jagatdal ..	.. Reliance Jute Mill ..	.. do ..	.. Weaving Overseer.
85	Mackenzie, J R ..	.. Baranagore ..	.. Baranagore South Mill	.. do ..	.. Clerk.
86(S)	,, E F ..	.. ditto ..	.. Kamarhati Jute Mill	.. do ..	.. Mill Manager, Honorary Magistrate.
87	,, Osgood Balwin.	Andrew Dum-Dum ..	.. 21, Mall Dum-Dum	.. do ..	.. Manager, Store Department, Messrs Saxby Farmar & Co, Entally, Calcutta.

rial No.	Name.	Thana.	Place of abode—Village, road or street.	Nationality.	Quality or occupation.
	M				
88	Mathrew, R M ..	.. Khardah ..	.. Titagarh Mill No. 2	.. European	.. Manager.
89	Meade, G A ..	.. Ballygunge ..	.. 40, Ballygunge Circular Road	.. do ..	.. Retired Controller of Stores, E B Ry.
90(S)	Milne, R ..	.. Titagarh ..	.. 6, Empire Jute Mill ..	.. do ..	.. Manager.
91	Moore, C S ..	.. Garden Reach ..	.. 75, Garden Reach Road	.. do ..	.. Assistant Traffic Superintendent, B N Ry.
92	Martin, E ..	.. Entally ..	.. 14-1, Convent Road ..	.. Anglo-Indian	.. Assistant, E I Ry Audit Office.
93(S)	Martin, S A C ..	.. Garden Reach ..	.. 75, Garden Reach Road	.. European	.. Assistant Auditor, B N Ry.
94(S)	Melvill, A ..	.. ditto ..	.. 43, Garden Reach Road	.. do ..	.. Salemaster of Clive Jute Mill.
95	Moncur, G ..	.. Jagatdal ..	.. Reliance Jute Mill ..	.. do ..	.. Batching Overseer.
96	Morison, R ..	.. Garden Reach	.. 61, Garden Reach Road	.. do ..	.. Blacksmith, Garden Reach Workshop.
97	Mudie, D M ..	.. ditto ..	.. ditto ..	.. do ..	.. Engineer, G R Workshop.
98	Mulcahy, C ..	.. Entally ..	.. 11/1, Canal Street ..	.. do ..	.. Assistant Claim Inspector, E I Ry.
99	Muller, C H ..	.. ditto ..	.. 19-1, Convent Road ..	.. do ..	.. Assistant, Balmer Lawrie & Co.
	N				
100	Nelson, B ..	.. Entally ..	.. 16, Convent Road ..	.. European	.. Pensioner (E B Ry).
101	Niblelt, D B ..	.. Baranagore ..	.. Marshall Sons & Co ..	.. do ..	.. Chief Accountant.
102(S)	Nicholson, R ..	.. Titagarh ..	.. Kelvin Jute Mill ..	.. do ..	.. Manager.

P

103(S)	Paterson, H	..	.. Garden Reach ..	.. 143, Garden Reach Road	.. European	.. Office Master, Clive Jute Mill.
104(S)	Page, J J	..	.. Budge-Budge ..	.. Lothian Jute Mill ..	.. do ..	.. Engineer.
105	Paxten, A	..	.. Garden Reach ..	.. 61, Garden Reach Road	.. do ..	.. Draftsman, Garden Reach Workshop.
106(S)	Petric, A	..	.. Jagatdal ..	.. Reliance Jute Mill ..	.. do ..	.. Engineer.
107	Paulith, W	..	.. Entally ..	.. 8-4, Canal Street ..	.. Anglo-Indian	.. Electrical Engineer.
108	Payne, J	..	.. ditto ..	.. 16, Convent Road ..	.. do ..	.. Accountant, Port Commissioners.

R

109	Rodricks, J	..	.. Entally ..	.. 6, Canal Street ..	.. Anglo-Indian	.. Publicity Officer, E I Ry.
110(S)	Reed Kay, J	..	.. Alipore ..	.. 7, Alipore Park, North	.. European	.. Merchant.
111	Rennie, C	..	.. Behaghata ..	.. 102, Narkeldanga Main Road	.. do ..	.. Superviser, Machines, Surah Jute Mills.
112	Rennie, J B	..	.. Garden Reach ..	.. 43, Garden Reach Road	.. do ..	.. Chief Engineer and Manager, Kesoram Cotton Mill.
113	Richardson, William		.. Budge-Budge ..	.. Budge-Budge ..	.. do ..	.. Engineer, Albion Jute Mill.
114(S)	Rose, G F	..	.. Bhowanipore ..	.. 16, Lee Road ..	.. do ..	.. Merchant.
115	Ross, J	..	.. Alipore ..	.. 21, Alipore Park, South	.. do ..	.. Service-holder.
116	Rustomji, S H	..	.. Ballygunge ..	.. 8, Ballygunge Circular Road	.. Zoroastrian	.. Honorary Magistrate.

S

117	Sabbage, E H	..	.. Garden Reach ..	.. 75, Garden Reach Road	.. European	.. Chief Clerk, Agent's Office, B N Ry.
118	Sands, F	..	.. Matiaburuz ..	.. 44, Garden Reach Road	.. do ..	.. Superintendent.

Serial No.	Name.	Thana.	Place of abode—Village, road or street.	Nationality.	Quality or occupation.
	S				
119	Sandilands, Geo	Garden Reach ..	.. 61, Garden Reach Road ..	European ..	Draftsman, Garden Reach Workshop.
120	Scall, W	ditto ..	.. 43, Garden Reach Road ..	do	Jute overseer, Clive Jute Mill.
121	Scott, T	ditto ..	.. 61, Garden Reach Road ..	do	Plaiter, Garden Reach Workshop.
122	Shanks, A M	Matiaburuz ..	.. 44, Garden Reach Road ..	do	Foreman.
123	Shelton, C H	Alipore ..	.. 2, Burdwan Road	do	Merchant.
124	Singer, C B	Budge-Budge ..	.. Budge-Budge	do	Office Master, Caledonian Mills, Chittraganj.
125	Singleton, T	Entally ..	.. 8-3, Canal Street	Anglo-Indian ..	Engineer, Calcutta Electric Supply Corporation, Limited.
126	Shines, J	Garden Reach ..	.. Hide Road	European ..	Assistant, Walford & Co.
127(S)	Simpson, T	Jagatdal ..	.. Reliance Jute Mill	do	Manager.
128	Stewart, William ..	ditto ..	.. Kankinara Jute Mills ..	do	Manager, Kankinara Jute Mills.
129(S)	Sund, J R	Baranagore ..	.. Baranagore South Mill ..	do	Manager.
130	Sword, J R	ditto ..	.. ditto	do	ditto.
	T				
131	Taylor, A	Garden Reach ..	.. 61, Garden Reach Road ..	European ..	Plaiter, Garden Reach Workshop.
132	Taylor, W L	ditto ..	.. 43, Garden Reach Road ..	do	Engineer, Garden Reach Workshop.

133(S)	Taylor, W R	..	..	Entally	..	..	15, Convent Road	..	.. Anglo-Indian .. Retired Railway Officer.
134	Thoms, A K	..	..	Jagatdal	..	..	Authpur	..	.. European .. Manager, Alliance Jute Mill, Jagatdal.
135(S)	Thomas, H N	.	..	Behaghata	..	..	42, Middle Road, Barrackpore	..	do .. .. Sale Master, Surrah Jute Mills.
136(S)	Todrick, G A	..	..	Alipore	..	..	1, Hastings Park Road	..	do .. .. Merchant.
137	Toohey, J	..	..	Barrackpore	..	..	44, Middle Road, Barrackpore	..	do .. .. Honorary Magistrate, Titagarh Municipality.
138	Torrence, J	..	..	Baranagore	..	..	Baranagore East Mill	..	do .. .. Office Clerk.
	V								
139	Vallant, B	..	..	Chitpur	..	..	Ashcroft Press	..	European .. Engineer.
	W								
140	Watson, W B	..	..	Budge-Budge	..	..	Budge-Budge Mills	..	European .. Sales Master, Budge-Budge and Lothian Jute Mills.
141(S)	Welburn, Frank	..	..	ditto	..	..	Budge-Budge	..	do .. .. Superintendent, Standard Oil Co, Budge-Budge.
142	Walker, J H	..	..	Naihati	..	..	Gauripur Works, Naihati	..	do .. .. Chemist, Gauripur Jute Mill.
143	Waters, G R	..	..	Baranagore	..	..	Venesta Ltd., Kamarhati	..	do .. .. Assistant Engineer.
144	Wabber, E A	..	..	Garden Reach	..	..	11, Garden Reach Road	..	do .. .. Caretaker, B N Ry Office.
145	Walton, G F	..	..	Alipore	..	..	21-1, Burdwan Road	..	do .. .. Merchant.

List of Common Jurors for the year 1931 (Indians)

Serial No.	Name.	Thana.	Place of abode—Village, road or street.	Nationality.	Quality or occupation.
	A				
146	Abdul Aziz ..	.. Behaghata ..	.. 92, Talpukhur Road ..	Muhammadan ..	Teacher, Calcutta Corporation Free Primary School.
147(S)	,, Baseque (Dr) ..	.. Basirhat ..	.. Basirhat ..	do ..	.. Landholder, Member, District Board.
148	,, Gafur ..	.. Baraset ..	.. Kajipara Sangmura ..	do ..	.. Clerk, E B Ry Agent's office No. 3, Koilaghat Street, Calcutta.
149	,, Gani ..	.. Bemapukur ..	.. 24, Tantibagan Lane .	do ..	.. Railway servant C/o Dl. Supdt., Crews, E I Ry, Howrah.
150(S)	,, Gafur Siddique	.. Baduria ..	.. Khashpore ..	do ..	.. Landholder.
151	,, Jabbar ..	.. Baraset ..	.. Kazipara, Dargabati ..	do ..	.. Clerk, E B Ry.
152	,, Jabbar Hafez	.. Watgunge ..	.. 78, Pipe Road ..	do ..	.. Government servant.
153(S)	,, Satter	.. Behaghata ..	.. 90, Narkeldanga North Road ..	do ..	.. Hide Merchant.
154	,, Sattar ..	.. Baraset ..	.. Kajipara, Sitipara ..	do ..	.. Clerk, High Court, Calcutta.
155	,, Rashid ..	.. Manicktala ..	.. 39, Baldeapara Road ..	do ..	.. Clerk, Alambazar Jute Mill' 24-Parganas.
156	Abdus Sattar ..	.. Ballygunge ..	.. 29-2, Jhowtala Road ..	do ..	.. Merchant.
157(S)	,, Samad ..	.. Behaghata ..	.. 90, Narikeldanga North Road ..	do ..	.. Assistant, Finance Department, Secretariat.
158	,, Samad ..	.. Ditto ..	.. 1, Kalimuddin Sarkar Lane ..	do ..	.. Free Pass Examiner, Import Department, Custom House, Calcutta.
159	Acharji, Atul Chandra	.. Watgunge ..	.. 3, Ramnath Pal Road ..	.. Hindu ..	.. Clerk, Port Commissioners' Office.
160	,, Krishna Chandra	.. Bhowanipore ..	.. 1, Gour Ghosh Road ..	.. do ..	.. Merchant.

161(S)	Addi, Panchanan	..	Mathurapore Alipore	..	8, Mayarpur Road	do	..	Landholder and Merchant.
162	,, Sarat Chandra	..	Alipore	..	6-1, Gopalnagar Road	do	..	Landholder.
163	,, Satish Chandra	..	ditto	..	8, Mayarpur Road	do	..	Merchant.
164	Aich, Bhuban Mohan	..	Tollygunge	..	24, Shanagore Road	do	..	Retired Accountant, 24-Parganas Collectorate.
165	Aikat, W N	..	Garden Reach	..	42, Garden Reach Road	Indian	..	Assistant Weaving Master, Kesoram Cotton Mill, Garden Reach.
166(S)	Ahmed, S A, Mr.	..	Beniapukur	..	3, Noor Ali Lane	Muhammadan	..	
167	,, Aminuddin	..	Deganga	..	Chandpur, P O Hadipur	do	..	Landholder.
168(S)	,, Anisuddin	..	Dum-Dum	..	Gouripur	do	..	Vice-Chairman, North Dum-Dum Municipality.
169	,, Jasimuddin	..	Magrahat	..	Ramchandrapur, P O Rangilabad	do	..	Landholder.
170	,, Kutubuddin	..	Beliaghata	..	7-1, Cross Lane	do	..	Building Contractor.
171(S)	,, Makbul, BA	..	ditto	..	235B, Manicktala Main Road	do	..	Head Master, Corporation Free Primary School.
172	,, Efajuddin	..	ditto	..	4, Narikeldanga Main Road	do	..	Businessman.
173	,, Nesar	..	Manicktala	..	13-1, Muraripukur Lane	do	..	Teacher, Jubilee Institute.
174(S)	,, Shamsuddin	..	Beniapukur	..	19-C, Cantopher's Lane	do	..	Merchant.
175	,, Shamsuddin	..	Titagarh	..	Naupara	do	..	Retired Sub-Inspector of Police
176	,, Ramjan	..	Basirhat	..	Neora	do	..	Merchant and Landholder
177	,, Sabdel	..	Bhangar	..	Murio	do	..	Merchant.

Serial No.	Name.	Thana.	Place of abode—Village, road or street.	Nationality.	Quality or occupation.
	A				
178	Ahmed, Samiruddin ..	Entally ..	.. 24, Ismail Street	Muhammadan ..	Teacher, Calcutta Madrassa.
179	„ T. ..	Ballygunj ..	.. 15/A, Chakraberia Road North ..	do ..	.. Landlord.
180	Ali Md. Esahaque ..	Hasnabad ..	.. Kalootola	do ..	.. Naib of Zeminder and Landholder.
181(S)	„ Mobarak (Khan Saheb) ..	Barrackpore ..	.. Government School, Barrackpore ..	do ..	.. Head Master.
182	„ Golam Akbar, Maulvi ..	ditto ..	.. Government High School, Barrackpore.	do ..	.. Head Maulvi.
183	„ Warish	Entally ..	.. 23, Middle Road	do ..	.. Landholder.
184	„ Ansari Sekendar ..	Hasnabad ..	.. Hasnabad	do ..	.. School Master and President Panchayet.
185	Ash, Bibhakar	Habra ..	.. Haidadpur	Hindu ..	.. Zemindar.
	B				
186	Bagchi, Satish Chandra ..	Cossipore ..	.. 33-B, Ratan Babu Road ..	Hindu ..	.. Clerk, Mackinnon Mackenzie's Office.
187	„ Satish Chandra ..	Sandeshkhali ..	.. Hatgacha	do ..	.. Naib, Port Canning.
188	Bagui, Akhoy Kumar ..	Rajarhat ..	.. Beguiati, P O Dum-Dum ..	do ..	.. Landholder and President Panchayet.
189	Baidya, Nurul Ahmed ..	Kulpi ..	.. Sreenagar, P O Kulpi	Muhammadan ..	Landholder.
190	„ Alimuddy ..	Baruipur ..	.. Olberia	do ..	.. Service-holder.
191	„ Pashupati Nath ..	Mathurapur ..	.. Gopinathpur	Hindu ..	.. Landholder
192	Baksh, Elahi	Beliaghata ..	.. 1-1, Raja Dinendra Street ..	Muhammadan ..	Hide Merchant.
193	„ Rahim	Sandeshkhali ..	.. Sakdah	do ..	.. Landholder.

194(S)	Bal, Sasi Bhusan	..	Habra	..	..	Gobordanga	..	Hindu	.. Manager, Chototaraf Estate.
195	Bangal, Rama Nath	..	Amdanga	..	..	Bodai, P O Amdanga	..	do	.. Trader and Landholder.
196(S)	Ballav, Debendra Nath, Rai Bahadur.		Chitpur	..		26-1, Galiff Street	..	do	.. Zemindar.
197(S)	,, Gobinda Das	..	Beliaghata	..	..	157, Beliaghata Main Road	..	do	.. Clerk, Ralli Brothers.
198(S)	,, Harendra Nath	..	Basirhat	..		Dhanyakuria	..	do	.. Zamindar.
199	,, Tarak Chandra	..	Habra	..	..	Biraballavpara	..	do	.. Asstt. Controller of Inspection, 6, Esplanade East, Calcutta.
200	Banerji, Ajit Kumar	..	Baruipur	..	..	Sashon, P O Baruipur	..	do	.. Zemindar.
201	,, Akhay Kumar	..	Bhawanipur	..	..	38 Mohim Halder Street	..	do	.. Landlord.
202	,, Anukul Chandra	..	Maheshtala	..	..	Raipur	..	do	.. Clerk.
203	,, Anath Nath	..	Bhowanipore	..	..	269, Kalighat Road	..	do	.. Landholder.
204	,, Anurup Chandra	..	Khardah	..	..	Khardah	..	do	.. Senior Accountant, office of the Controller of Army Factory Accounts Metal and Steel Factory, Ichapore, E B Ry.
205	,, Ashutosh	..	Entally	..	..	48-1-3, Tangra Road	..	do	.. Contractor.
206 (S)	,, Ashutosh	..	Titagarh	..	..	Titagarh	..	do	.. Superintendent to the Estate of Sm. Pramada Debi.
207	,, Ashutosh	..	Budge-Budge	..	..	Pujali, P O Achipore	..	do	.. Landholder.
208	,, Atulyadhan	..	Khardah	..	..	Banerjeepara, Panihati	..	do	.. Clerk, E B Ry Chief Auditor's Office, Section E, No. 3, Koilaghat Street, Calcutta.
209	,, Bankim Chandra	..	Ekbalpur	..	..	21, Ramkamal Mukherji Street	..	do	.. Clerk, Mackinnon, Mackenzie & Co.

Serial No.		Name.	Thana.	Place of abode—Village, road or street.	Nationality.	Quality or occupation.
		B				
210	Banerji,	Behari Lal ..	Joynagore ..	.. Joynagore, Banerjeepara, Joynagore P O	Hindu ..	.. Landholder.
211	„	Beni Madhab ..	Bhowanipore ..	.. 24, Sankaripara Road	do ..	.. Contractor.
212	„	Bibhutibhusan ..	Dum-Dum ..	.. 493, Sadar Bazar Road ..	do ..	.. Naib, Panihati Wards Estate.
213 (S)	„	Bhaba Sankar ..	Barrackpore ..	.. Manirampur, P O Barrackpore ..	do ..	.. Manager, *The Bengalee*.
214 (S)	„	Bhupati Lal ..	Maheshtala ..	.. Maheshtala	do ..	.. Zemindar.
215	„	Bibhuti Bhusan ..	Baruipur ..	.. Sashon, P O Baruipur ..	do ..	.. Landholder.
216	„	Bihari Lal, Rai Sahib	ditto ..	.. South Garia	do ..	.. Government Pensioner.
217(S)	„	Bijay Krishna, MA ..	Khardah ..	.. Panihati	do ..	.. Head Master, Panihati School.
218(S)	„	Bijoy Krishna ..	Bhowanipur ..	.. 28-A, Balaram Bose 1st Lane ..	do ..	.. Press owner.
219	„	Bijay Kumar ..	Kulpi ..	.. Lakhikantapore, P O Ghateshwara	do ..	.. Landholder.
220	„	Bijoy Kumar, MA ..	Khardah ..	.. Panihati	do ..	.. Head Master, Panihati H E School
221	„	Bimalendu ..	Maheshtala ..	.. Raipur	do ..	.. Clerk, Planters' Stores and Agency, Clive Street, Calcutta
222	„	Binode Behari ..	Baranagore ..	.. Atul Krishna Banerjee Lane ..	do ..	.. Accountant, Office of Controller of Stamps and Stationery
223	„	Bipin Chandra ..	Tollygunge ..	.. 128-1, Monoharpukur Road ..	do ..	..
224(S)	„	Bipin Behar ..	Beliaghata ..	.. 14-1, Ram Mohan Roy Road ..	do ..	.. Clerk.
225(S)	„	Brajendra Kumar ..	Watgunge ..	.. 78, Diamond- Harbour Road ..	do ..	.. Cloth Merchant.

226	„	Brajendra Kumar	..	Baduria	..	..	Punra	..	do	..	.. Landholder and Commissioner, Baduria Municipality.
227	„	Butto Krishna	..	Watgunge	..	..	20, Circular Garden Reach Road	..	do	..	.. Zemindar.
228	„	Bhupendra Nath	..	ditto	..	..	10-B, Jager Nath Sircar Lane	..	do	..	.. Clerk, B N R
229	„	Charu Chandra	..	Bhowanipore	..	..	17, Kali Das Patitunda Lane	..	do	..	.. Surveyor-General's Office.
230	„	Chandra Nath	..	Maheshtala	..	..	Maheshtala	..	do	..	.. Pension-holder.
231	„	Debendra Nath	..	Naihati	..	..	Kantalpara..	..	do	..	.. Clerk in the Office of the Controller of Stamps and Stationery.
232	„	Dhirendra Nath	..	Bhowanipur	..	..	57, Haldarpara Lane	..	do	..	.. Service.
233	„	Dhirendra Nath	..	ditto	..	..	37, Chandra Chatterjee Street	..	do	..	.. Electrical Engineer.
234	„	Durga Das	..	Baruipur	..	..	South Garia Village and P O	..	do	..	.. Landholder.
235	„	Dwijendra Nath	..	Baranagore	..	..	Mayradanga	..	do	..	.. Clerk.
236	„	Girindra Nath	..	Naihati	..	..	Banerjeepara Road, Naihati	..	do	..	.. Clerk, Planters' Stores and Agency, Calcutta.
237	„	Gobinda Chandra	..	Baliaghata	..	..	90-2, Garpar Road	..	do	..	.. Head Clerk, New Zealand Insurance Co, Ltd.
238	„	Gopal Chandra	..	Maheshtala	..	..	Chatla, P O Maheshtala	..	do	..	.. Zemindar.
239	„	Hari Bhusan	..	Jagatdal	..	..	Bhatpara ..	..	do	..	.. Assistant, Surgeon-General's Office, Calcutta.
240	„	Hari Mohan	..	Khardah	..	..	Agarpara ..	..	do	..	.. Clerk, Begg, Dunlop & Co, Hare Street, Calcutta.
241	„	Hrishikesh	..	Budge-Budge	..	..	Paikpara ..	..	do	..	.. Clerk, B & O Co's Office, Calcutta.
242	„	Indubhusan	..	Beliaghata	..	..	26, Sura 1st Lane	..	do	..	.. Teacher, George High School, Narkeldanga.
243	„	Jadu Gopal	..	Behala	..	..	Bonomali Naskar Road	..	do	..	.. Money-lender.

Serial No.	Name.	Thana	Place of abode—Village, road or street.	Nationality.	Quality or occupation.
	B				
244	Banarji, Jadu Nath	Baruipur	Garia, P O South Garia	Hindu	Zemindar and President Panchayet.
245	,, Jnanendra Kumar	ditto	Sashon, P O Baruipur	do	Zemindar.
246	,, Jogendra Krishna	ditto	Kalyanpur, P O Baruipur	do	Landholder and service-holder.
247 (S)	,, Jogendra Nath Rai Sahib.	Naihati	Banerjeepara, Naihati	do	Government Pensioner.
248	,, Jotindra Nath	Maheshtala	Maheshtala	do	Graduate, Zemindar and Drug Shop Owner.
249	,, Jotindra Nath	Joynagar	Durgapur	do	Coal Merchant.
250	,, Kali Das	Sonarpur	Baruli	do	Clerk.
251	,, Kali Das	Watgunge	92, Diamond Harbour Road	do	Merchant.
252	,, Kali Dhan	Baruipur	South Garia Village and P O	do	Landholder.
253 (S)	,, Kaliprosad	Khardah	Khardah	do	Professor, Bangabasi College.
254	,, Khagendra Nath	Baruipur	Kalyanpur, P O Baruipur	do	Zemindar.
255	,, Khetra Das, BA	Behala	Laskarpur; also c-o Rev W E French, BSC, Head Master, Carey H E School, Bishnupur, *via* Behala.	do	Senior Master, Carey High English School.
256	,, Khirode Krishna	Baduria	Ghosepur	do	Landholder.
257	,, Kiron Chandra	Khardah	Rohra	do	Clerk.
258	,, Kishori Mohan	Bhawanipore	33, Shama Nanda Road	do	Artist.
259	,, Kripa Chandra	Baruipur	Kalyanpur, P O Baruipur	do	Zemindar.

260	„	Krishnadhan	..	Maheshtala	..	..	Maheshtala	..	..	do	..	..	Clerk, Messrs. Graham & Co.
261	„	Lalit Mohan	..	ditto	..	..	ditto	..	..	do	..	..	Zemindar.
262	„	Madan Mohan	..	Naihati	..	..	Mitrapara Road	..	..	do	..	..	Clerk, Planters' Stores.
263	„	Mahim Chandra	..	Maheshtala	..	..	Raipur, P O Maheshtala	..		do	..	..	Clerk, E B Railway, Sealdah.
264	„	Mahim Chandra	..	Titagarh	..	..	A. P. Debis Road, Titagarh	..		do	..	..	Overseer, Titagarh Municipality.
265	„	Mohendra Nath	..	Chitpur	..	..	26, Simlaipara Lane	..	..	do	..	..	Government pensioner.
266	„	Mohendra Nath	..	Entally	..	..	9-B, South Road	..	..	do	..	..	Landholder.
267	„	Mohit Kumar	..	Bhowanipore	..	..	13, Mohini Haldar Street	..		do	..	..	Businessman.
268 (S)	„	Monomohan	..	Harowa	..	..	Minakhan Kutchari	..	..	do	..	..	Superintendent, Port Canning Co.
269	„	Manmatha Nath	..	Behala	..	..	Pathakpara, Behala P O	..		do	..	..	Accountant, New Empire Theatre, Calcutta.
270	„	Monoranjan	..	Bhowanipur	..	..	33, Balaram Bose's Ghat Road	..		do	..	..	Independent gentleman.
271	„	Muralidhar	..	Ballygunge	..	..	18-1, Fern Road	..	..	do	..	..	Lecturer, Calcutta University.
272	„	Nagendra Nath	..	Baruipur	..	..	Sashon, P O Baruipur	..	..	do	..	..	Landholder.
273	„	Nagendra Nath	..	Maheshtala	..	..	Maheshtala	..	..	do	..	..	Clerk.
274	„	Nalin Behari, BA	..	Baranagar	..	..	Victoria H E School	..	..	do	..	..	Teacher.
275	„	Nalini Mohan	..	Tollygunge	..	..	Plot No. 176, Lake Road	..		do	..	..	Propnetor, Gazipur Perfumery Works.
276	„	Nani Gopal	..	Baranagore	..	..	Belghoria	..	..	do	..	..	Assistant to the Controller, Patent and Design.
277 (S)	„	Narayan Chandra	..	Khardah	..	..	Agarpara	..	..	do	..	..	Rice Merchant.

Serial No.	Name.	Thana.	Place of abode—Village, road or street.	Nationality.	Quality or occupation.
	B				
278 (S)	Banerji, Narayan Das ..	Beliaghata ..	.. 12, Biswas Nursery Lane ..	Hindu ..	.. Engineer and Contractor.
279	„ Narendra Nath ..	Watgunj ..	.. 10-C, Jager Nath Sircar Lane ..	do ..	.. Clerk, Govt. Dockyard.
280	„ Nibaran Chandra ..	Maheshtala ..	.. Maheshtala. Present address Planter Stores Agency, Calcutta.	do ..	.. Clerk.
281	„ Nircde Kumar ..	Dum-Dum ..	.. Station Road, Dum-Dum ..	do ..	.. Translator, Calcutta High Court.
282	„ Parbati Charan, BA ..	Behala ..	.. Barisa	do ..	.. Teacher, Barisa Oxford Mission School.
283	„ Pasupati ..	Maheshtala ..	.. Raipur	do ..	.. Zemindar.
284	„ Panchanan ..	Budge-Budge ..	.. Sarengabad ..	do ..	.. Landholder.
285	„ Phani Bhusan ..	Maheshtala ..	.. Maheshtala	do ..	.. Clerk, James Simson & Co, Clive Street.
286	„ Phanindra Nath ..	Naihati ..	.. Naihati	do ..	.. Clerk, Devenport Co.
287	„ Prafulla Kumar ..	Tollygunge ..	.. 132-2, Russa Road, South ..	do ..	.. Clerk, Accountant-General, Bengal's Office.
288	„ Pramatha Nath ..	Maheshtala ..	.. Maheshtala	do ..	.. Clerk, B N Railway Audit Office, Garden Reach.
289	„ Promotho Nath ..	Sarupnagar ..	.. Charghat, P O Gobordanga ..	do ..	.. Zamindar.
290	„ Prosad Das ..	Bhowanipur ..	.. 38, Mahim Halder Street ..	do ..	.. Landlord.
291 (S)	„ Prosad Chandra ..	Ballygunge ..	.. 26, Ritchie Road	do ..	.. Merchant.
292	„ Probodh Chandra ..	Hasnabad ..	.. Rajepur, P O Hasnabad ..	do ..	.. Landholder.
293 (S)	„ Probodh Chandra ..	Barrackpore ..	.. Manirampur	do ..	.. Head Clerk, General Traffic Manager's Office, E I Railway, Howrah.

294	„	Provas Chandra	..	Maheshtala	..	..	Maheshtala	..	..	do	..	.. Zamindar.
295	„	Rajendra Nath	..	Behala	..	..	Barisa ..	..	..	do	..	.. Retired Agricultural Officer.
296	„	Rasik Lal	..	Cossipore	..	..	4, Satchasipara Road	..	..	do	..	.. Landlord.
297(S)	„	Rasamay	..	Bhowanipore	..	..	146, Harish Mukherjee Road	..	..	do	..	.. Head Pandit, South Suburban School.
298	„	Rames Chandra	..	Habra	..	..	Village and P O Gobordanga	..	..	do	..	.. Zamindar.
299(S)	„	Rasik Chandra, B.A.	..	Kulpi	..	..	Moshamari ..	..	..	do	..	.. Schoolmaster.
300	„	Ratish Chandra, BA	..	Khardah	..	..	Sodepur ..	..	..	do	..	.. Businessman.
301	„	Sachindra Nath	..	Maheshtala	..	..	Maheshtala P O	..	..	do	..	.. Teacher, Maheshtala H E School.
302	„	Sarat Chandra	..	Behala	..	..	Rai Bahadur Road	..	..	do	..	.. Clerk, Statistical Department, B N Railway Office, Garden Reach.
303(S)	„	Sarashi Krishna, BA,BL		Bhowanipore	..	..	54, Sankaripara Road	..	..	do	..	.. Teacher, South Suburban School.
304(S)	„	S K	..	..	Watgunj	..	..	3, Puddapukur Square	..	do	..	.. Zamindar.
305	„	Sashanka Shekhar	..	Basirhat	..	..	Champapukur	..	do	..	..	President, Champapukur Union Board.
306	„	Satyendra Nath	..	Dum-Dum	..	..	Kadihati, P O Dum-Dum	..	do	..	..	Landholder.
307	„	Sashi Bhusan	..	Jaynagar	..	..	Baharu ..	..	do	..	..	ditto
308	„	Satyendra Nath	..	Manicktala	..	..	4, Nilambar Mukherji Street	..	do	..	..	Secretary, National Insurance Company.
309	„	Satya Das	..	Beliaghata	..	..	17, Garpar Road ..	..	do	..	..	Broker.
310(S)	„	Satish Chandra	..	Baruipur	..	..	Kalyanpur, P O Baruipur	..	do	..	..	Zamindar, Honorary Magistrate and President Panchayat.
311	„	Shyamapada	..	Titagarh	..	..	Charnock ..	..	do	..	..	Tradesman.

Serial No.	Name.	Thana.	Place of abode—Village, road or street.	Nationality.	Quality or occupation.
	B				
312	Banerji, Siddheswar	Jagatdal	Narayanpur P O	Hindu	Treasurer, Bhatpara Municipality.
313	„ Siva Bhusan	Khardah	Khardah	do	Assistant Head Master, Sodepur H E School.
314	„ Siva Das	Baruipur	Sason, P O Baruipur	do	Zamindar.
315	„ Siva Prasanna	Maheshtala	Maheshtala	do	ditto.
316(S)	„ Srikumar	Tollygunge	57, Lake Road	do	Educationist.
317	„ Sukumar	ditto	13, Gopal Banerji Lane	do	Water Inspector, Calcutta Municipality.
318	„ Sunit Kumar	Khardah	Ghola	do	Test Auditor, S S Ry.
319	„ Sudhansu Sekhar	Basirhat	Champapukur, P O Hadipur	do	Landholder.
320(S)	„ Surendra Chandra, MA	Beliaghata	30, Sastitala Road	do	Professor, Presidency College.
321(S)	„ Surendra Nath, MA	Entally	14, Munshibazar Road	do	Professor, Ripon College.
322	„ Tulshi Das	Bhowanipore	2, Russa Road	do	Merchant and landholder.
323	Bapuli, Lalit Mohan	Mathurapur	Ramnagar, P O Mathurapur	do	ditto.
324	„ Sarat Sashi	ditto	ditto	do	ditto.
325	Basak, Lal Behari	Baranagore	Khashbagan	do	ditto.
326	Basu, Ajit Kumar	Ballyganj	8-1, Gariahat Road	do	Businessman.
327	„ Anadi Mohan	Beliaghata	20, Sir Guru Das Road	do	Clerk.

328	„	Ananta Lal	..	ditto	..	..	8-A, Preo Nath Banerji Street	..	do	..	..	Landholder.
329(S)	„	Anil Chandra	..	Alipore	..	..	3-B, Jainuddin Mistry Lane	..	do	..	..	Teacher.
330	„	Ashutosh ..	..	Tollygunge	..	..	4, Russa Road ..	..	do	..	..	Port Commissioners' Office.
331	„	Ashutosh ..	..	Beliaghata	..	..	4, Peari Mohan Sur Garden Lane	..	do	..	..	Clerk.
332	„	Barada Charan	..	Watgunge	..	..	51, Nazir Lane ..	..	do	..	..	Contractor.
333	„	Basanta Kumar	..	Bistupur	..	..	Pathorberia ..	..	do	..	..	Landholder.
334	„	Bhupendra Nath	..	Cossipore	..	..	4, Satchashipara Lane	..	do	..	..	Manager, Estate of Probodh Ch Mitter, Cossipore.
335	„	Bibhuti Bhusan	..	Baruipur	..	..	Baruipur ..	..	do	..	..	2nd Master Baruipur H E School.
336	„	Bijali Bhusan	..	Tollygunge	..	..	48, Mudiali Road ..	..	do	..	..	Clerk, E B Railway Audit Office.
337	„	Bijoy Krishna	..	Habra	..	..	Gaipur, P O Gobordanga	..	do	..	..	Landholder and Clerk, Barataraf Gobordanga.
338(S)	„	Bijoy Krishna, BA	..	Magrahat	..	..	Dhamua	..	do	..	..	Teacher, Hadorai H E School, Baruipore.
339	„	Binay Krishna	..	Habra	..	..	Gobordanga-Gaipur / 60, Mechuabazar Street, Calcutta.	..	do	..	..	Coach Builder.
340(S)	„	Braja Nath	..	Beliaghata	..	..	12, Sitalatala Lane ..	..	do	..	..	Translator, Writers' Buildings.
341	„	Brajendra Kumar	..	Sonarpur	..	..	Harinavi	..	do	..	..	Landholder.
342	„	Chuni Lal ..	..	Magrahat	..	..	Gokarni	..	do	..	..	Clerk, Messrs Bird & Co Calcutta.
343(S)	„	Dhirendra Nath	..	Chitpur	..	..	72, Barrackpore Trunk Road	..	do	..	..	Zamindar.
344(S)	„	D K BSc	..	Bhowanipur	..	..	115, Harish Mukherji Road	..	do	..	..	Engineer

Serial No.	Name.	Thana.	Place of abode—Village, road or street.	Nationality.	Quality or occupation.
	B				
345	Basu, Dhirendra Nath	Hasnabad	Saidpur	Hindu	Talukdar.
346	,, Dhirendra Nath	Beliaghata	18, Talpukur Road	do	Landholder.
347	,, Dwarkanath	Chitpur	6, Dwarka Nath Bose Lane	do	Supervisor, Cossipore-Chitpur Municipality.
348	,, Gosta Bihari	Entally	8, Ananda Palit Road	do	Landholder.
349	,, Hari Charan	Budge-Budge	Sarengabad, P O Budge-Budge	do	Landholder and Service-holder.
350	,, Harendra Krishna	Manicktala	15, Muraripukur Road	do	Timber Merchant.
351	,, Harendra Nath	Nawpara	Garulia	do	Clerk, Gillanders. Arbuthnot & Co, Calcutta.
352	,, Hari Charan	Beliaghata	9-A, Charakdanga Road	do	Timber Merchant.
353(S)	,, Jatindra Mohan	Baduria	Baduria	do	Honorary Magistrate.
354	,, Jatindra Nath	Sonarpur	Kodalia	do	Landholder.
355	,, Jatindra Nath	Cossipore	58, Barrackpore Trunk Road	do	Landlord and Clerk in the Imperial Bank.
356	,, Jatindra Nath	Baduria	Arbelia	do	Zamindar.
357	,, Jitendra Nath	Deganga	Jamalpur, P O Hadipur	do	Landholder.
358(S)	,, Mr J M	Beliaghata	8, Garpar Road, Calcutta	do	Landholder and Honorary Magistrate.
359	,, Jatindra Nath	ditto	16, Rakhal Ghosh Lane	do	Landholder.
360	,, Jogendra Nath	ditto	22, Rakhal Ghosh Lane	do	Clerk.

361(S)	„	Jogesh Chandra	Bhowanipore	..	..	7, Kundu Road	..	..	do	..	..	Assistant Collector, Calcutta Corporation.
362(S)	„	Jogesh Chandra	Sonarpur	..	..	Rajpur	..	..	do	..	..	Chief Clerk, E B Ry, D T S office, Calcutta District, Sealdah.
363	„	Jogesh Chandra	Canning Town	..	..	Canning Town	..	..	do	..	..	Head Clerk, Port Canning Co.
364(S)	„	Joggeswar	Titagarh	..	..	Bowbazar	..	..	do	..	..	Head Clerk, Kelvin Jute Mills.
365	„	Jyotish Chandra	Canning Town	..	..	Canning Town	..	..	do	..	..	Inspector, Port Canning and Land Improvement Co.
366(S)	„	Jyotish Chandra, MA	Bhowanipore	..	..	7, Kundu Road	..	..	do	..	..	Assistant Cashier, Central Bank.
367(S)	„	Jyotish Chandra	Diamond Harbour	..	..	Kamarpol, P O Sarisha	..	..	do	..	..	Landholder.
368	„	Kamal Krishna	Rajarhat	..	..	Bistupur, village Rajarhat, Bistupur P O			do	..	..	Clerk, E B Ry, Kailaghat, Calcutta.
369	„	Karali Charan	Watgunge	..	..	16B, Circular Garden Reach Road			do	..	..	Clerk, Chief Engineer's Office, B N Ry.
370	„	Kumud Behari	Hasnabad	..	..	Taki	..	..	do	..	..	Landholder.
371	„	Kumud Ranjan, BA	Alipore	..	..	6-B, Gobinda Addy Road		..	do	..	..	Landholder and merchant.
372	„	Lalit Mohan	Baraset	..	..	Jagulia	..	..	do	..	..	*Statesman* Office, Calcutta.
373	„	Lalit Kumar	Basirhat	..	..	Basirhat	..	..	do	..	..	Landholder.
374(S)	„	Mahit Mohon	Ballygunj	..	..	8-1, Gariahat Road	..	..	do	..	..	Businessman.
375	„	Manindranath	Beliaghata	..	..	22, Jagannath Datta Lane		..	do	..	..	Clerk in a Merchant's Office.
376	„	Manindranath	Watgunge	..	..	24, Michael Datta Street		..	do	..	..	Service-holder.
377	„	Manmohan	Deganga	..	..	Jamalpur, P O Hadipur		..	do	..	..	Landholder.
378	„	Manmatha Nath	Basirhat	..	..	Basirhat	..	..	do	..	..	Merchant.

Serial No.	Name.	Thana.	Place of abode—Village, road or street.	Nationality.	Quality or occupation.
	B				
379	Basu, Manmatha Nath	Bhowanipore	19, Rupchand Mukherjee Lane	Hindu	Building Contractor.
380	,, Nagendranath	Bhangar	Bhatipota, P O Bhangar	do	Landholder.
381(S)	,, Narendra Nath	Ballygunj	12, Ritchie Road	do	Contractor, P W D.
382	,, Bankim Chandra	Magrahat	Dhemua, P O Multi	do	Service-holder.
383	,, Nani Lal	Cossipore	6, Roypara By-Lane	do	Government servant.
384	,, Nani Gopal	Magrahat	Usti	do	Merchant.
			10-7, Canal East Road		
385	,, Jadabananda	Budge-Budge	Shampur, P O Budge-Budge	do	Service-holder.
386(S)	,, Pannalal	Baliaghata	258-A, Upper Circular Road	do	Zamindar.
387	,, Pasupati	Alipore	3-B, Joynuddin Mistry Lane	do	Retired Clerk.
388	,, Pasupati	Beliaghata	16, Joynarayan T P Lane	do	Manager, M L Shaw & Co.
389	,, Pramatha Nath	Manicktala	47, Satkawri Mittra Lane	do	Clerk.
390(S)	,, Pramatha Nath	Bhowanipore	8/1C, Shamanand Road	do	Head Master, South Suburban School.
391	,, Rabindra Nath	Beliaghata	53, Talpukur Road	do	Translator, High Court.
392	,, Rajani Kumar	Bhowanipore	6, Chandra Nath Chatterji Street	do	Merchant and landholder.
393	,, Rajendra Nath	Baraset	Chotojagulia	do	Landholder.

394	,,	Ram Chandra	..	Baranagar	..	..	Belghoria	..	do	..	..	Second Master, Areadah H E School.
395	,,	Rash Behari	..	Magrahat	..	..	Hansuri, P O Rangilabad	..	do	..	..	Service-holder.
396(S)	,,	Sadhan Kumar	..	Diamond Harbour	..	..	Kalagachia, P O Sarisa	..	do	..	..	Zamindar.
397	,,	Sadhan Chandra	..	Budge-Budge	..	..	Serangabad, P O Budge-Budge	..	do	..	..	Landholder and Service-holder.
398	,,	Santosh Kumar	..	Chitpur	..	..	2, Paikpara Road ..	..	do	..	..	Landholder.
399(S)	,,	Sarat Chandra	..	Baduria / Beniapukur	..	..	Punra / 27, Linton Street, Calcutta	..	do	..	..	Zamindar.
400	,,	Sarat Kumar, MSC	..	Jagaddal	..	..	Bhatpara	..	do	..	..	Degree-holder.
401	,,	Sachindra Kumar	..	Sonarpur	..	..	Harinavi	..	do	..	..	Landholder.
402	,,	Shama Charan	..	Alipore	..	..	6-B, Aftab Mosque Lane	..	do	..	..	Survey Head Clerk.
403	,,	Subodh Krishna	..	Tollygunge	..	..	P-395, Russa Road, South	..	do	..	..	Life Insurance Agent.
404	,,	Sudhir Chandra	..	ditto	..	..	258-6, Russa Road ..	..	do	..	..	Overseer, Calcutta Corporation.
405	,,	Sudhir Kumar	..	Alipore	..	..	1, Mayerpore Lane ..	..	do	..	..	Zamindar.
406	,,	Satis Chandra	..	Joynagar	..	..	Gocharan	..	do	..	..	Service-holder.
407	,,	Subodh Chandra	..	Magrahat	..	..	Gokarni, P O Multi ..	..	do	..	..	Clerk, Merchant's Office.
408	,,	Subodh Kumar	..	Tollygunge	..	..	Mudiali	..	do	..	..	Director, Indian Equitable Insurance Company.
409	,,	Surendra Nath, BA	..	Diamond Harbour	..	..	Kalagachia, P O Sarisa	..	do	..	..	Teacher, H E School, Sarisa.
410	,,	Surendra ..	..	Magrahat	..	..	Benipur, P O Magrahat	..	do	..	..	Landholder.

Serial No.	Name.	Thana.	Place of abode—Village, road or street.	Nationality.	Quality or occupation.
	B				
411	Basu, Sourindra Nath ..	Magrahat ..	.. Benipur . ..	.. Hindu ..	.. Landholder.
412	,, Sita Nath	Behaghata ..	.. 16, Sura East Road ..	.. do ..	.. Head Clerk R S N Company.
413	,, Srish Chandra	Bhowanipore ..	.. 39-1, Chaulpati Road ..	.. do ..	.. Landholder
414(S)	,, Surendra Nath, BA ..	Budge-Budge ..	.. Sarangabad ..	.. do ..	. Teacher H E School, Sarangabad.
415(S)	,, Tarunchandra, BA ..	Chitpur ..	.. Tala N Suburban School	.. do ..	.. Head Master Tala N Suburban School
416	,, Upendra Nath ..	Sonarpore ..	.. Kamerabad ..	.. do ..	.. Clerk Turner Morrison & Co
417	,, Tej Chandra ..	Baranagore ..	. Jaynaram Banarji Lane	.. do ..	.. Landholder
418(S)	,, Trailokshya Nath, BA .	Khardah ..	.. Panihati . .	do .	Officer-in-charge Bengal Chemical and Pharmaceutical Works.
419	Batabyal Basanta Kumar	Kulpi ..	.. Kamarchack ..	.. do ..	.. Landholder
420	Begg, Johu . ..	Garden Reach ..	.. Nahabatkhana, Garden Reach Road	Muhammadan	.. Independent gentleman.
421	Bera, Girish Chandra ..	Sagore ..	.. Bamankhali P O, Murigonga ..	Hindu ..	.. Teacher Bamankhali U P School.
422	,, Janaki Nath	Bhowanipore ..	.. 6, Mallik Lane ..	.. do ..	.. Clerk, Calcutta University.
423	Bhaduri, Dwijendranath ..	Cossipore ..	.. 52, Barrackpore Trunk Road ..	do ..	.. Private Secretary to the Estate of Kangali Charan Dutt.
424	,, Santosh Kumar ..	Behaghata ..	.. 17-3, Pitambar Bhattacharyya Lane	do ..	.. Rice merchant.
425(S)	,, Upendra Nath ..	Cossipore ..	.. 52, Barrackpore Trunk Road ..	do ..	.. Laboratory Assistant, Botany, Presidency College.
426	Bhandari Hem Chandra ..	Falta ..	.. Kotaldanga, Shaipore P O ..	do ..	.. Landholder

427	Bhattacharji,	Abinash Chandra	Amdanga	..	..	Village Rangpur and P O Neelgunge	do	..	..	ditto
428	,,	Amareswar ..	Tollygunge	..	..	30, Nakuleswar Bhattacharji Lane	do	..	..	Clerk, Calcutta Corporation.
429	,,	Amarkrista, BA	Jagatdal	..	..	Bhatpara ..	do	..	..	Teacher, Naihati Mahendra School.
430	,,	Amrita Lal *alias* Santoo	Naihati	..	..	Mitrapara Road, Naihati ..	do	..	..	Clerk, Chief Auditor's Office, E B Ry, Goods Section, Traffic Audit Department, Sealdah.
431	,,	Anadi Bhushan, BA	Baduria	..	..	Punra ..	do	..	..	Assistant teacher, Punra H E School.
432	,,	Anukul ..	Habra	..	..	Khatura, at present 5, Shyampukur Street, Shambazar, Calcutta.	do	..	..	Ghee and sugar merchant.
433	,,	Ashutosh ..	Baraset	..	..	Hariharpore ..	do	..	..	Landholder and Assistant, Newman & Co.
434	,,	Baidya Nath ..	Alipore	..	..	7-1, Gopalnagar Road ..	do	..	..	Astrologer.
435	,,	Banamali ..	Sonarpore	..	..	Boral ..	do	..	..	Landholder.
436(S)	,,	Bhudhar Chandra, MA	Barrackpore	..	..	Manirampur ..	do	..	..	Teacher, Debi Prasad H E School.
437	,,	Bhut Nath *alias* Prabodh Chandra	Jagatdal	..	..	Bhatpara ..	do	..	..	Head Pandit, Hooghly Collegiate School.
438	,,	Bhupati Chandra	Rajarhat	..	..	Atghara, Rajarhat, Bistupur P O ..	do	..	..	Landholder.
439	,,	Bipin Bihari ..	Sonarpore	..	..	Rajpur ..	do	..	..	Teacher, Rajpur M E School.
440	,,	Dasarathi, BA, Rai Saheb.	Jagatdal	..	..	Bhatpara ..	do	..	..	Government pensioner.
441	,,	Dhirendra Nath	Bijpur	..	..	Thakurpara, Halisahar.. ..	do	..	..	Clerk, Accountant-General, Bengal's Office.
442	,,	Dina Nath ..	Watgunge	..	..	6-2, Juggar Nath Sarkar Lane ..	do	..	..	Assistant, Director of Industries, Bengal.
443(S)	,,	Dwijendra Nath	Baraset	..	..	Koyra ..	do	..	..	Landholder.

Serial No.	Name.	Thana.	Place of abode—Village, road or street.	Nationality.	Quality or occupation.
	B				
444	Bhattacharji, Girija Charan, BA	Jagatdal ..	.. Bhatpara ..	Hindu ..	.. Clerk.
445	,, Haribhusan, B. sc.	Baranagar ..	.. Victoria H E School ..	do ..	.. Teacher.
446	,, Hari Charan ..	Sonarpur ..	.. Rajpur ..	do ..	.. Assistant Engineer, office of the Chief Engineer, P H D, Bengal, 3, Charnock Place.
447	,, Harihar ..	Jagatdal ..	.. Bhatpara ..	do ..	.. Clerk.
448	,, Hari Charan ..	Tollygunge ..	.. 15, Nepal Bhattacharji's Street ..	do ..	.. Landholder.
449	,, Hari Pada ..	Alipore ..	.. 72, Joynuddi Mistry Lane ..	do ..	.. Private service-holder.
450	,, Hari Pada, MA	Jagatdal ..	.. Bhatpara ..	do ..	.. Head Master of a school.
451(S)	,, Hari Pada, BA	ditto ..	.. ditto ..	do ..	.. Clerk.
452	,, Jagatbandhu	Bhowanipur ..	.. 90-C, Ashutosh Mukherjee Road ..	do ..	.. Businessman.
453	,, Jogesh Chandra	Baraset ..	.. Village Babubagan, P O Dum-Dum Cantonment.	do ..	.. Landholder.
454(S)	,, Jogendra Nath, BA	Sonarpore ..	.. Rajpur ..	do ..	.. Clerk, Bengal Secretariat, General Department.
455(S)	,, Jnanendra Nath, MA	Entally ..	.. 40-C, Pottery Road ..	do ..	.. Teacher, Ripon Collegiate School.
456	,, Jogendra Nath	Joynagar ..	.. Durgapur, P O Joynagar ..	do ..	.. Government pensioner.
457(S)	,, Kalitosh, MA	Naihati ..	.. Naihati	do ..	.. Landholder.
458(S)	,, Kamal Krishna, MA	Baruipur ..	.. Begumpore, P O South Garia ..	do ..	.. Professor.
459	,, Kartik Chandra	Naihati ..	.. Kantalpara	do ..	.. Municipal Commissioner.

460	„	Kartick Chandra	Budge-Budge	..	..	Pyster Road	..	..	do	..	..	Store-keeper, A P & Co's Depôt, Budge-Budge.
461	„	Krishna Kumar	Jagatdal	..	..	Bhatpara	..	..	do	..	..	Teacher, Naihati Mahendra School.
462	„	Kishori Mohan, BA	Sonarpore	..	..	Rajpur	..	..	do	..	..	Timber merchant.
463	„	Kunja Behari ..	Chitpur	..	..	North Suburban School, Tala	..	do	..	..		Senior Teacher, North Suburban School, Tala.
464	„	Lalit Mohan ..	Sonarpore	..	..	Rajpur	..	..	do	..	..	Clerk, Accountant-General, Bengal's Office.
465	„	Lalit Mohan ..	ditto	..	..	Boral	..	..	do	..	..	Clerk, Messrs Martin & Co.
466	„	Manmathanath	Habra	..	..	Gobardanga	..	..	do	..	..	School Master, Gobardanga.
467(S)	„	Monju Gopal, MA	Naihati	..	..	Naihati	..	..	do	..	..	Professor, Presidency College, Calcutta.
468	„	Nalendra Nath, BA	Sonarpore	..	..	Kodalia	..	..	do	..	..	Clerk, Accountant-General, Bengal's Office.
469	„	Nani Gopal ..	Diamond Harbour	..	..	Bardrone, P O Hatugunge	..	do	..	..		Landholder.
470(S)	„	Narendra Nath	Habra	..	..	Nawpara	..	..	do	..	..	Clerk, Calcutta Corporation.
471	„	Nikunja Bihari	Sonarpore	..	..	Rajpur	..	..	do	..	..	Clerk, Accountant-General, Bengal's Office. (Exempted from serving as a Juror during the period from October to March.)
472	„	Panchanan ..	Baraset	..	..	Baraset P O	..	..	do	..	..	Head Pandit, Government School, Baraset.
473	„	Panchanan ..	Jagatdal	..	..	Bhatpara	..	..	do	..	..	Teacher, Bhatpara High English School.
474	„	Panchanund ..	ditto	..	..	ditto	..	..	do	..	..	Superintendent, Bhatpara School.
475	„	Paritosh ..	Naihati	..	..	Naihati	..	..	do	..	..	Contractor.
476	„	Pramatha Nath	Jagatdal	..	..	Authpur	..	..	do	..	..	Clerk, Controller of Military Supply Accounts, Calcutta.

Serial No.	Name.	Thana.	Place of abode—Village, road or street.	Nationality.	Quality or occupation.
	B				
477(S)	Bhattacharji, Pramatha Nath	Bhowanipore ..	.. 15-1, Shankaripara Road ..	Hindu ..	.. Assistant Head Master, Kalighat School.
478	,, Rajendra Kumar, MA	Diamond Harbour	.. Diamond Harbour	do ..	.. Assistant Teacher, Diamond Harbour H E School.
479	,, Ram Nath	Sonarpore ..	.. Srirampore	do ..	.. Landholder.
480	,, Sarat Chandra	Tollygunge (C P)	.. 43-1, Mudiali Rd.	do ..	.. Pension Holder.
481	,, Sashi Bhushan	ditto (B P)	.. Baistamghata	do ..	.. Clerk.
482	,, Sashanka Shekhar	Bijpur ..	.. E B Ry Colony, Bijpur ..	do ..	.. Assistant Superintendent, Dy Auditor's Office, E B Ry, Kanchrapara.
483	,, Satish Chandra	Basirhat ..	.. Dhalchita	do ..	.. School Master, Basirhat.
484(S)	,, Shama Charan, Rai Bahadur	Naihati ..	.. Kantalpara	do ..	.. Vice-Chairman, Bhatpara Municipality.
485(S)	,, Siddheswar, BA	Baranagar ..	.. Areadah	do ..	.. Assistant Head Master.
486	,, Sita Nath	Baruipore ..	.. Dehimadanmalla	do ..	.. Service-holder and President.
487(S)	,, Srikrishna Prasanna, BA, Kabyatirtha.	Haroa ..	.. Khalisadi 47, Mohim Halder Street, Kalighat, Calcuttta.	do ..	.. Assistant Head Master, Hindu School, Calcutta.
488(S)	,, Sudhir Nath, BA	Barrackpore ..	.. Manirampur, Barrackpore P O ..	do ..	.. School Master, Ripon Collegiate School.
489	,, Surendra Nath	Baduria ..	.. Taragunia	do ..	.. Landholder and School Master.
490(S)	,, Surendra Nath, BSc.	Jagatdal ..	.. Bhatpara	do ..	.. School Master, Bhatpara School.
491	,, Taragati ..	Bhowanipore ..	.. 38, Bakulbagan Road	do ..	.. Landholder.
492	,, Tara Pada ..	Entally ..	.. Chingrihata Road	do ..	.. Order supplier.

493(S)	„	Upendra Nath	Behala	..	..	Behala Gossaipara	..	..	do	..	..	Deputy Chief Accountant, Calcutta Corporation.
494	Bhowmic,	Nagendra Nath	..	Manicktala	..	..	3, Canal East Road	..	..	do	..	..	Aratdar.
495	Biswas,	Adya Nath	..	Swarupnagar	..	..	Tentulia	..	..	do	..	..	Landholder.
496	„	Atiar Rahman	..	Deganga	..	..	Champatola, P O Hadipur	..	Muhammadan		..		Landholder and aratdar.
497	„	Bankim Chandra	..	Rajarhat	..	..	Patharghata, Rajarhat, Bistupur P O.		Hindu	..	..		Landholder.
498	„	Bijoy Kali	..	Hashnabad	..	..	Gholtukri, at present Madhabkati	..	do	..	..		Zamindar.
499	„	Fanibhusan	..	Ballygunge	..	..	13, Baluhakkak Lane	..	..	do	..	..	Clerk, Calcutta Municipality.
500	„	Jatindra Nath	..	Basirhat	..	..	Jirikpore	..	..	do	..	..	Landholder.
501	„	Jatindra Mohan	..	Alipore	..	..	3-H, Bridge Road	..	..	do	..	..	Clerk, Survey Office.
502	„	Jatindra Nath	..	Sonarpore	..	..	Gobindapore	..	..	do	..	..	Clerk, merchant office.
503	„	Jogendra Nath	..	Khardah	..	..	Khardah	..	..	do	..	..	Honorary Magistrate and Zamindar.
504	„	Kamakhaya Nath	..	Naihati	..	..	Gouripore	..	..	do	..	..	Jute Department, Gouripore Jute Mill.
505	„	Nagendra Nath	..	Beliaghata	..	..	2, Biswas Nursery Lane	..	do	..	..		Merchant.
506	„	Narendra Nath	..	Swarupnagar	..	..	Chargha	..	..	do	..	..	Landholder.
507	„	Nirmal Baran	..	Beliaghata	..	..	46, Peary Mohan Sur Garden Lane		do	..	..		Engineer, Birla Bros., Ltd., Calcutta.
508	„	Kankar Lal	..	Beliaghata	..	..	24, Narkeldanga Main Road	..	do	..	..		Landlord.
509	„	Sita Nath	..	Swarupnagar	..	..	Nityanandakati	..	..	do	..	..	Landholder and merchant.
510	„	Sadhu Charan	..	Beliaghata	..	..	40, Garpar Road	..	..	do	..	..	Clerk in a merchant office.

Serial No.	Name.	Thana.	Place of abode—Village, road or street.	Nationality.	Quality or occupation.
	B				
511	Biswas, Sudhir Kumar ..	Beliaghata ..	.. 56, Peary Mohan Sur Garden Lane	Hindu ..	.. Building Surveyor.
512	Brahma, Chandra Kanta ..	Tollygunge ..	.. 23-7, Tollygunge Road ..	do ..	.. Clerk, Revenue Board.
513(S)	Brahmachari, Priya Nath, BA	Sonarpore ..	.. Harinavi	do ..	.. Government pensioner.
514	„ Phanindra Nath	ditto ..	.. ditto	do ..	.. Landholder.
515	Bairagi, Satish Ch, BA ..	Bistupur ..	.. Bistupur	Christian	.. School Master.
	C				
516	Chadha, Mulkraj	Nawapara ..	.. Ichhapur	Hindu ..	.. Cashier, G S Factory, Ichhapur.
517	Chakladhar, Haran Chandra, MA	Tollygunge ..	.. 24, Shahanagore Lane ..	do ..	.. Professor, University College.
518	Chakravarty, Abinash Chandra	Bhowanipur ..	.. 30-A, Harish Chatterjee Street ..	do ..	.. Merchant.
519	„ Baman Das ..	Basirhat ..	.. Basirhat School Boarding ..	do ..	.. School Master, Basirhat H. E School.
520	„ Ambica Charan	Canning ..	.. Deria P. O. Bansra ..	do ..	.. Landholder and President Panchayet.
521	„ Barada Prasad ..	Pratapnagar ..	.. Kalikapur	do ..	.. Landholder.
522	„ Balai Chandra ..	Alipore ..	.. 8, Pitambar Ghattak Lane ..	do ..	.. Clerk, Bengal Survey Office.
523	„ Basanta Kumar..	Sonarpore ..	.. Harinavi	do ..	.. Landholder.
524	„ Ambika Charan	ditto ..	.. Sonarpore	do ..	.. ditto.
525	„ Basanta Kumar..	Bijpur ..	.. Bijpur	do ..	.. Senior Clerk, Loco Superintendent, E B Ry, Kanchrapara.

526	„	Bhabani Charan	Cossipore	..	..	35, Ratan Babu Road	..	..	do	.. Zamindar.
527	„	Binode Behari	Protapnagar	..	..	Kalikapore	..	..	do	.. Local Zamindar.
528	„	Birendra Nath	ditto	..	..	ditto	..	..	do	.. ditto.
529	„	Dasorathi	Beliaghata	..	..	16-9, Beliaghata Main Road	..	..	do	.. Merchant.
530	„	Debendra Nath	Protapnagar	..	..	Kalikapore	..	..	do	.. Zamindar.
531	„	Durgadas	Habra	..	..	Dogachia, P O Dattapukur	..	..	do	.. Clerk, Calcutta Corporation.
532	„	Fanindra Nath	Garden Reach	..	..	Sonai Bazar	..	..	do	.. Depôt Store-keeper, B N Ry.
533	„	Gadadhar	Tollygunge	..	..	16, Shanagore Road	..	..	do	.. Retired Post Master.
534(S)	„	Haridas	Falta	..	..	Santoshpur	..	..	do	.. Landholder.
535	„	Horendra Krishna, BA.	Joynagar	..	..	Mazilpur	..	..	do	.. Teacher, J. M. Training School.
536	„	Hari Bhusan	Sonarpore	..	..	Kodalia	..	..	do	.. Head Clerk, Ripon College.
537	„	Haripada M.A.	Ballygunj	..	..	38/2, Beltolla Road	..	..	do	.. Teacher.
538	„	Indubhusan	Bhowanipore	..	..	107, Ashutosh Mukherjee Road	..		do	.. Zamindar.
539(S)	„	Jatindra Jiban	Diamond Harbour	..	..	Netra, P O Netra	..	..	do	.. School Master.
540	„	Jatindra Nath	Sonarpore	..	..	Kodalia	..	..	do	.. Clerk, Accountant-General, Bengal's Office.
541(S)	„	Jiban Gopal	Falta	..	..	Mallikpore, P O Falta	..		do	.. Landholder.
542	„	Jitendra Nath	Tollyganj C. P.	..	..	44-1 and 45, Mudiali Road	..		do	.. Surveyor.
543	„	Jogendra Nath	Bhowanipore	..	..	20, Gobinda Bose Lane	..		do	.. Clerk, Calcutta Corporation

Serial No.	Name.	Thana.	Place of abode—Village, road or street.	Nationality.	Quality or occupation.
	C				
544	Chakravarti, Jotish Chandra ..	Bhawanipore ..	.. 2, Kundoo Road ..	.. Hindu ..	.. Retired Government Pensioner.
545	„ Kali Charan ..	Cossipore ..	.. Radha Mohan De Lane ..	do ..	.. Clerk in the Office of Inspector-General of Police.
546	„ Kanai Lal ..	Canning Town ..	.. Jibantalla, P O Canning ..	do ..	.. Naib and landholder.
547	„ Kashi Nath ..	Chitpur ..	.. Tala North Suburban School ..	do ..	.. Senior Teacher, North Suburban School, Tala.
548	„ Karali Charan ..	Bhowanipore ..	.. 43, Sankaripara Road ..	do ..	.. Pandit, South Suburban Branch.
549	„ Khogendra Nath	Baruipore ..	.. Shikharbali	do ..	.. Zamindar.
550	„ Krishna Mohan	Magrahat ..	.. Mollarchak, P O Magrahat ..	do ..	.. Landholder.
551	„ Lalit Mohan ..	Baraset ..	.. Jagulia	do ..	.. Clerk, N N Sen & Co, Naval, Contractors, Calcutta.
552	„ Lalit Mohan ..	Swarupnagar ..	.. Bithari	do ..	.. Government pensioner.
553	„ Manindra Nath ..	Habra ..	.. Raghunathpur, P O Rajibpur ..	do ..	.. President Panchayet.
554	„ Nagendra Nath, BA.	Khardah ..	.. Rahrah	do ..	.. Head Master, Sodepur H E School.
555	„ Nani Gopal ..	Baruipur ..	.. Ramnagar, P O South Ramnagar ..	do ..	.. Landholder.
556	„ Narayan Chandra	Sonarpur ..	.. Langalberia	do ..	.. ditto.
557	„ Narendra Nath ..	Swarupnagar ..	.. Banglani, P O Gokulpur ..	do ..	.. Teacher, Banglani U P School, and landholder.
558	„ Narendra Nath ..	Protapnagar ..	.. Kalikapore	do ..	.. Landholder.
559	„ Nanilal ..	Sonarpore ..	.. Rajpur	do ..	.. Pensioner.
560 (S)	„ Nilmani, MA ..	ditto ..	.. Jagatdal	do ..	.. Professor, Presidency College.

561	„	Nirmal Chandra	Bhawanipur	..	..	6-B, Parbati Chakrabarty Lane	..	do	..	.. Businessman.
562	„	Nripendra Nath..	Barañagar	..	..	Baranagar, Baralpara ..	..	do	..	.. Clerk, High Court.
563 (S)	„	Panchu Gopal ..	ditto	..	..	Ban Hooghly, P O Alambazar	..	do	..	.. Landholder and Chairman Baranagar Municipality.
564	„	Paresh Chandra	Habra	..	..	Beliany, P O Gobardanga	..	do	..	.. Shopkeeper and paddy merchant.
565	„	Paresh Chandra	Rajarhat	..	..	Gopalpur, P O Dum Dum Cantonment.		do	..	.. Landholder.
566	„	Paresh Chandra	ditto	..	..	Gopalpur ..	..	do	..	.. President, Kaikhali Patiara Union Board.
567	„	Purna Chandra ..	Sonarpore	..	..	Harinavi	..	do	..	.. Broker and order supplier.
568	„	Rajendranath ..	ditto	..	..	Chandripota ..	..	do	..	.. Pensioner.
569	„	Ramesh Chandra	Rajarhat	..	..	Gopalpur, P O Dum Dum	..	do	..	.. Landholder.
570	„	Satish Chandra ..	Sonarpur	..	..	Kodalia	..	do	..	.. Clerk, Telegraph Office.
571	„	Satish Chandra ..	Hasnabad	..	..	Bhebia	..	do	..	.. President Panchayet.
572	„	Subodh Chandra	Bhowanipore	..	..	65, Lansdowne Road ..	..	do	..	.. Head Assistant, District Health Office, No. 4.
573	„	Subodh Chandra	Sonarpore	..	..	Langalbaria ..	..	do	..	.. Trader.
574	„	Sudhir Chandra	Magrahat	..	..	Gokarni, P O Magrahat	..	do	..	.. Service-holder.
575	„	Surendra Nath ..	Bishnupur	..	..	Mowkhali	..	do	..	.. Naib and landholder.
576	„	Sushil Chandra	Sharupnagore	..	..	Bithuri	..	do	...	... Head Master, M E School, Bithari K P Institution.
577	„	Umapada, BA ..	Sonarpur	..	..	Chandripota ..	..	do	..	.. Teacher.
578	Chandra, Anukul Chandra Rai Sahib.		Tollygunj B. P.	..	..	Dhakuria ..	..	do	..	.. Government Pensioner.

Serial No.	Name.	Thana.	Place of abode—Village, road or street.	Nationality.	Quality or occupation.
	C				
579	Chandra, Durga Charan ..	Maniktala ..	.. 42, Telangabagan Lane ..	Hindu ..	.. Clerk in a business firm.
580(S)	Char, Sushil Chandra, BA ..	Alipore ..	.. 5, Gobindo Addy Road ..	do ..	.. Teacher.
581	Chandra, Kartick Chandra, BA	Titagarh ..	.. Nilganj	do ..	.. Landholder.
582	Char, Promatha Nath ..	Entally ..	.. 2, Palmerbazar Road	do ..	.. Clerk, Medical College Hospital.
583	Chattarji, Amulyadhan ..	Dum Dum ..	.. Nimta	do ..	.. Municipal Head Clerk.
584	,, Ashutosh ..	Beniapukur ..	.. 51, Beniapukur Road	do ..	.. Contractor.
585 (S)	,, Atul Chandra ..	Behala ..	.. Behala, Tincouri Cottage ..	do ..	.. Head Asstt. Central Stationery Office, Government of India, Calcutta. (Now on leave preparatory to retirement.)
586	,, Abhoy Charan ..	Titagarh ..	.. Talpukur	do ..	.. Tradesman.
587	,, Amarendra Nath ..	Nawapara ..	.. Nawpara	do ..	.. Tour Clerk, c-o. Messrs. Macniel & Co. Tea Estates Deptt., 2, Fairlie Place, Calcutta.
588	,, Annada Prasad ..	Sonarpore ..	.. Gobindapur	do ..	.. Railway servant, E I Ry.
589 (S)	,, B. M.	Ballyganj ..	.. 96, Lansdowne Road	do ..	.. Businessman.
590	,, B. N.	Taltala ..	.. 59, Durga Charan Banarji Lane ..	do ..	.. Clerk in the Office of the Surveyor-General.
591	,, Bagala Charan ..	Watgunge ..	.. 13-2, Ramkamal Mukherji Street ..	do ..	.. Private gentleman.
592	,, Basanta Kumar ..	Tollygunge ..	.. 16, Sree Mohan Lane	do ..	.. Clerk, Head Office, E I Ry, Fairlie Place.
593	,, Beni Madhab ..	Magrahat ..	.. Dhonra	do ..	.. Landholder.

594	,,	Bhabataran ..	Budge Budge ..	..	Budge Budge ..	..	do ..	..	Contractor.
595	,,	Bhujanga Bhushan..	Bhawanipur ..	..	14-3A, Balaram Bose Ghat Road ..		do ..	..	Salesman, Continental tyre & Rubber Co.
596	,,	Bibhuti Bhusan, BA	Budge Budge ..	..	Surangabad, Budge-Budge P O ..		do ..	..	Head Master, Surangabad H E School.
597	,,	Bidhu Bhusan ..	Bhowanipore ..	..	64-B, Harish Mukherji Road ..		do ..	..	Contractor.
598	,,	Bijoy Krishna ..	ditto ..	..	45, Harish Chatterjee Street ..		do ..	..	Merchant.
599 (S)	,,	Binode Bihari, BA ..	Tollygunge (BP)	..	Dhakuria village and P O ..		do ..	..	Municipal Commissioner.
600	,,	Binoy Krishna ..	Beliaghata ..	..	43, Talpukur Road ..	..	do ..	..	Clerk
601 (S)	,,	Binoy Krishna ..	Habra ..	..	Digra	..	do ..	..	Landholder.
602	,,	Bhupendranath ..	Behala ..	..	Gossaipara ..	..	do ..	..	Contractor, c/o Mukherjee & Co., 11, Clive Row, Calcutta.
603	,,	Brojo Nath ..	Rajerhat ..	..	Patharghata, Rajarhat, Bistoopur P O.		do ..	..	Landholder.
604	,,	Bishnu Charan ..	Sonarpur ..	..	Gobindapur, P O Sonarpur ..		do ..	..	Teacher.
605	,,	Brindaban Chandra	Cossipore ..	..	2, Kassiswar Chatarji Lane ..		do ..	..	Cashier, Cossipore-Chitpur Municipal Office.
606	,,	C. K. ..	Bhowanipore ..	..	31, Balaram Bose Ghat Road ..		do ..	..	Engineer, Calcutta Corporation Division No. IV.
607	,,	Charu Chandra ..	Tollygunge ..	..	109-2, Dhakuria Road ..	..	do ..	..	Landholder.
608(S)	,,	Dharani Dhar ..	Behala ..	..	Pathakpara, Behala P O ..		do ..	..	Retired Accountant, Military Accounts Department.
609	,,	Dayamoy ..	Bhowanipore ..	..	165, Kalighat Road Club ..		do ..	..	Merchant.
610	,,	Dhiraj Chandra ..	Budge Budge ..	..	Haldarpara ..	..	do ..	..	Store-keeper, I B P & Co's Depot, Budge Budge.
611	,,	Dhirendra Nath, BSc	Behala, Mograhat	.. ..	Brahmosamaj Road .. (Sometimes) Dhora	..	do ..	..	Clerk in charge, B. N. Ry. Head Office.

Serial No.	Name.	Thana.	Place of abode—Village, road or street.	Nationality.	Quality or occupation.
	C				
612	Chattarji, Dijendra Nath ..	Tollygunj ..	.. 27-1, Hazra Lane ..	.. Hindu ..	.. Clerk, Bengal Chamber of Commerce.
613	„ Fani Bhusan ..	Bhowanipore ..	.. 4, Gobinda Ghosal Lane ..	do ..	.. Building Contractor.
614	„ Girish Chandra ..	Amdanga ..	.. Maricha, Majerpara P O ..	do ..	.. Landholder.
615	„ Gopal Chandra ..	Behala ..	.. Goragachha	do ..	.. Teacher, Behala M E School.
616	„ Gouri Kissore, BA ..	Baranagore ..	.. Dakshineswar	do ..	.. Teacher, Baranagore Victoria School.
617	„ Gauri Charan ..	Diamond Harbour	.. Sarisa	do ..	.. Landholder.
618	„ Gaur Kissore, BA ..	Baranagore ..	.. Victoria H E School, Baranagore ..	do ..	.. 4th Master.
619	„ Hari Charan ..	Titagarh ..	.. Mohanpur	do ..	.. Clerk.
620(S)	„ Hari Charan ..	Watgunge ..	.. 71-1, Mansatala Lane	do ..	.. Clerk, B N Ry Office.
621	„ Hari Dhan ..	Bhangore ..	.. Nawrab	do ..	.. Zamindar.
622	„ Hari Mohan ..	Titagarh ..	.. Ganeshpur	do ..	.. Landholder.
623	„ Haripada ..	Kulpi ..	.. Gabberia	do ..	.. ditto.
624	„ Hari Sadhan ..	Budge-Budge ..	.. Nangi, P O Mahestala	do ..	.. Landholder and service-holder.
625	„ Harish Chandra ..	Mahestala ..	.. Kristanagar	do ..	.. Clerk, Backer, Grey & Co., Ltd, Calcutta.
626(S)	„ Hemendra Nath, MA	Burtalla ..	.. 114A, Maniktalla Street ..	do ..	.. Clerk, Calcutta University.
627	„ Jitendra Nath ..	Dum Dum ..	.. Kadihati	do ..	.. Landholder and Clerk, Merchant Office.

628	„	Jitendra Nath	..	Budge-Budge	..	..	Nangi, P O Mahestala ..	..	do	.. Landholder.
629	„	Jiban Chandra	..	Khardah	..	..	Sodepur	..	do	.. Government Pensioner.
630	„	Jugal Kishore	..	Dnm-Dum	..	..	Kadihati	..	do	.. Assistant, Office of the Controller of Army Factory Accounts, 6, Esplanade East, Calcutta.
631	„	Jogesh Chandra	..	Beliaghata	..	..	Canal East Road ..	..	do	.. Store-Keeper, Indian Patent Stone Works, M G Agents of Bird & Co.
632	„	Kailash Chandra	..	Cossipore	..	..	8, Seal's Garden Lane ..		do	.. Clerk, Imperial Bank.
633	„	Kalidas	..	Ballygunge	..	..	15-A, Earl Street ..	..	do	.. Landholder.
634	„	Kanai Lal	..	Chitpore	..	..	10, Banamali Chattarji Street	..	do	.. Municipal Commissioner and Surkey Mill Owner.
635	„	Kanai Lal	..	Bhowanipur	..	..	27, Mohim Halder Street	..	do	.. Clerk, District Board.
636	„	Kiran Chandra	..	Basirhat	..	..	Bashirhat	..	do	.. Sheristadar, 3rd Munsiff Court.
637	„	Kedar Nath	..	Bhowanipore	..	..	2-1, Townsend Road ..	..	do	.. Landholder and Businessman.
638	„	Krishna Chandra	..	ditto	..	..	31, Baloram Bose Ghat Road	..	do	.. Merchant.
639	„	Krishna Chandra	..	ditto	..	..	30, Harish Chatterjee Street	..	do	.. ditto.
640	„	Kristo Lal	..	Beliaghata	..	..	"Netaikutir" Rajendra Lal Mitter Street.		do	.. Accountant, Breakwell Co, Ltd.
641	„	Lakhan Chandra	..	Budge Budge	..	..	Nangi, P O Mahestala ..	..	do	.. Landholder and service-holder.
642	„	Lakhi Narain	..	Bhowanipore	..	..	92, Russa Road, South	..	do	.. Clerk, Shaw Wallace & Co.
643	„	Lalit Mohan	..	Naihati	..	..	Banarjipara		do	.. Clerk, Office of Mackinnon, Mackenzie & Co., Calcutta.
644 (S)	„	Lalit Mohan	..	Bhowanipore	..	..	17, Baloram Bose Ghat Road		do	.. Head Clerk, Andrew Yule & Co.

Serial No.	Name.	Thana.	Place of abode—Village, road or street.	Nationality.	Quality or occupation.
	C				
645 (S)	Chattarji, Mahadeb, MA	Baranagore	Sagore Dutta Free H E School, Kamarhaty.	Hindu	Headmaster.
646 (S)	„ M G	Beliaghata	110H, Narikeldanga Main Road	do	Jute broker.
647	„ Manilal	Beniapukur	13, Banstala Lane	do	Clerk.
648	„ Moni Mohan	Ballygunj	44, Lansdowne Road	do	School Master.
649(S)	„ Manmatha Nath	Baraset	Nibadhui	do	Landholder.
650	„ Manindra Nath	Kulpi Gobberia	P O Ghateswara	do	ditto.
651	„ Moni Mohan	Baduria	Taragunia	do	Head Master, Puddapukur Institute, Calcutta.
652	„ Monoranjan	Mahestala	Jalkhuna	do	Merchant.
653	„ Mahit Mohan	Cossipore	23, Gopal Chandra Chattarji Road	do	Clerk, Government Stationery and Stamp Office.
654(S)	„ Mrinal Chandra	Baranagore	Ariadha	do	Clerk, Khardah Jute Mills.
655	„ Nani Gopal	Baruipur	Sashon, P O Baruipur	do	Landholder.
656	„ Nani Gopal	Bijpur	Halisahar Chowdhurypara	do	Head Clerk, Electric Engineer's Office, Kanchrapara.
657	„ Nanilal	Joynagar	Joynagar, Banarjipara, P O Joynagore.	do	Landholder.
658	„ Nagendra Nath	Titagarh	Talpukur	do	ditto.
659	„ Narendra Nath, BSC	Barrackpore	Sadarbazar	do	Analyst, Public Health Department, Government of Bengal.
660(S)	„ Narendra Nath	Bhowanipore	43A, Mahim Haldar's Street	do	Contractor.

661(S)	„	Nibaran Chandra	..	Garden Reach	..	..	75-4, Garden Reach Road	..	do	..	..	Head Record-keeper, Chief Engineer's Office, B N Ry.
662	„	Nishi Nath	..	Bhowanipur	..	..	5, Beltola Road	..	..	do	..	..	Landlord.
663	„	Nityananda	..	Naihati	..	..	Garifa	..	..	do	..	..	Clerk, Executive Engineer's Office, E B Ry.
664(S)	„	P. L.	..	..	Bhowanipore	..	..	4, Gobinda Ghosal Lane	..	do	..	..	Honorary Magistrate, Alipore.
665	„	Paresh Nath	..	Behala	..	..	Bonomali Naskar's Road, Behala	..	do	..	..	Landholder.
666	„	Paresh Nath	..	Tollygunge B. P.		..	Dhakuria village and P O	..	do	..	..	Clerk.
667	„	Pasupati	..	Mahestala	..	..	Chata, P O Mahestala	..	..	do	..	..	Employee in the office of the Surveyor-General, India, 13, Wood Street, Calcutta.
668(S)	„	Phani Bhusan	..	Bhowanipur	..	..	4, Harish Mukherji Road	..	do	..	..	Honorary Magistrate.
669	„	Pramatha Nath	..	Baranagore	..	..	Haldarpara, Munshirhat	..	do	..	..	Tradesman, Dealer in paint.
670	„	Prafulla Kumar	..	Sarupnagar	..	..	Malangapara	..	..	do	..	..	Pandit, Mitra Institution, 21, Patuatola Lane, Calcutta.
671	„	Probodh Chandra	..	Haroa	..	..	Khashbalanda	..	..	do	..	..	Clerk, Merchant Office.
672	Bhattacharjee, Probodh Chandra			Sonarpur	..	..	Chandpur	..	..	do	..	..	Clerk.
673(S)	Chattarji, Probodh Chandra, MA			Beliaghata	..	..	27, Narkeldanga Main Road	..	do	..	..	Shopkeeper.
674	„	Probodh Chandra	..	Baranagore	..	..	Dhakshineswar	..	..	do	..	..	Municipal Commissioner.
675	„	Rabindra Nath	..	Alipore	..	..	Bengal Forms Office, Alipore	..	do	..	..	Assistant Store-keeper.
676(S)	„	Rasamay	..	Bhowanipur	..	..	114-2, Hazra Road	..	..	do	..	..	Professor, Ripon College.
677	„	Rajani Kanta	..	Sonarpur	..	..	Mahinagar	..	..	do	..	..	Clerk, Cossipore Gun and Shell Factory.
678	„	Rangalal	..	Haroa	..	..	Haroabazar P. O Haroa	..	do	..	..	Merchant.

Serial No.		Name.	Thana.	Place of abode—Village, road or street.	Nationality.	Quality or occupation.
		C				
679	Chattarji,	Rajendra Kumar	Tollygunge	7 Lake Road	Hindu	Landholder.
680	,,	Ram Chandra	Khardah	Panihati	do	Teacher, T N H E School.
681	,,	Rishi Kesh	Baraset	Gustia, P O Badu	do	Clerk and Municipal Commissioner.
682	,,	Rev. S K, MA	Bistupur	Bistupur	Christian	Head Master, Bistupur Sikha Sangha H. E. School and President of Bistupur Union Board.
683	,,	Sachindra Nath	Sonarpur	Gobindapur, P O Sonarpur	Hindu	Landholder.
684	,,	Sailaprosad	Khardah	Khardah	do	Contractor.
685	,,	Saileswar	Naihati	Naihati	do	Clerk, Divisional Cashier's Office, East Indian Railway.
686	,,	Santi Nath	Dum Dum	Kadihati	do	Landholder and Clerk, North British Mercantile Office, 101-1, Clive Street.
687	,,	Sarat Chandra	Khardah	Sukchar	do	Sugar Merchant.
688	,,	Satish Chandra	Habra	Digra, P O Duttapukur	do	Zamindar.
689	,,	Satish Chandra	Maheshtala	Kristanagar	do	Clerk.
690	,,	Satyapada	Manicktala	30-B, Telengabagan Lane	do	ditto.
691	,,	Siddeswar	ditto	Maheshtala	do	Landholder.
692	,,	Siddeswar	Cossipore	77, South Sinthee Road	do	Contractor and Landowner.
693	,,	Siris Chandra	Noapara	Shamnagore	do	Landholder.

694	,,	Sristhidhar ..	Beliaghata ..	..	23, Jugipara Lane ..	..	do ..	..	Assistant, Signal Engineering Office, Eastern Bengal Railway, Sealdah.
695	,,	Subodh Kumar, BA, BT	Bistupur ..	..	Bistupur	..	Christian ..	..	Teacher, Bistupur Sikha Sangha H. E. School
696	,,	Sudhamadhab ..	Magrahat ..	..	Dhura, P O Hatuaganj ..		Hindu ..	..	Landholder (Jotedar).
697	,,	Sudin Krishna ..	Dum Dum ..	..	Registry Office Road, Dum Dum ..		do ..	..	Clerk in the office of the Controller of Examinations.
698	,,	Surendra Nath ..	Sonarpur ..	..	Gobindapur, P O Sonarpur ..		do ..	..	Broker.
699	,,	Surendra Nath ..	Behala ..	..	Gholsapore, Behala ..		do ..	..	Overseer, Port Commissioners' Office, Calcutta.
700	,,	Surendra Nath ..	Tollygunge ..	..	Dhakuria village and P O ..		do ..	..	Clerk.
701	,,	Suresh Chandra ..	Naihati ..	..	Banarjipara		do ..	..	Pensioner.
702(S)	,,	Tarak Nath ..	Titagarh ..	..	Talpukur		do ..	..	Clerk, Military Accounts Office.
703	,,	Thakurdas ..	Bhowanipur ..	..	45, Harish Chatterjee Street ..		do ..	..	Merchant.
704	Choudhury,	Atulchandra ..	Watgunge ..	..	1-4, Hem Chandra Street ..		do ..	..	Ditto.
705	,,	Bipin Behari ..	Tollygunge ..	..	Beni Nandan Street, Bhowanipore		do ..	..	Head Clerk, Messrs. Lyon & Lyon.
706	,,	Dinesh Chandra ..	Ditto ..	..	P 316, Ballygunge Avenue ..		do ..	..	Personal Asstt. to Agent, B. N. Ry., Kidderpore.
707	,,	Haripada ..	Basirhat ..	..	Tantra, P O Bhabla		do ..	..	School Master.
708	,,	Jatindra Nath ..	Kharda ..	..	Rahrah		do ..	..	Clerk, Calcutta Corporation.
709(S)	,,	Kamal Chandra ..	Tollygunge ..	..	P 356, Russa Road		do ..	..	Zamindar.
710	,,	Kristadhan, MA ..	Manicktala ..	..	8-1B, Bipin Mitter Lane ..		do ..	..	Landholder.

Serial No.	Name.	Thana.	Place of abode—Village, road or street.	Nationality.	Quality or occupation.
	C				
711(S)	Choudhury, Narain Chandra, BA	Manicktala ..	.. 57, Manicktala Main Road ..	Hindu ..	.. Clerk, Bengal Secretariat, Public Works Department.
712(S)	,, Pratap Chandra ..	Beliaghata ..	.. 85, Raja Rajendra Lal Mitra Road	do ..	.. Clerk.
713	,, Rakhal Chandra ..	Joynagar ..	.. Dakshin Baraset	do ..	.. Assistant, Office of the Controller of Currency, Treasury Buildings, Calcutta.
714	,, Ramendralal ..	Diamond Harbour	.. Kalagachia	do ..	.. School Master.
715	,, Sailendra Nath ..	Joynagar ..	.. Mayda, P O Baharu	do ..	.. Landholder.
716	,, Sarat Chandra ..	Behala ..	.. Naskerpore Bishalakshitala, Behala P O	do ..	.. Service-holder in Forbes Forbes Campbell & Co, Ltd, No. 8, Royal Exchange Place, Calcutta.
717	,, Sati Ranjan ..	Naihati ..	.. Banerjipara	do ..	.. Rice Mill Owner.
718	,, Surendra Nath ..	Sonarpur ..	.. Harinavi	do ..	.. Senior Accountant, Accountant-General, Bengal's Office, Calcutta.
719	,, Santosh Kumar ..	Sarupnagar ..	.. Tentulia	do ..	.. Landholder.
720	,, Sudhir Kumar ..	Joynagar ..	.. Majilpur	do ..	.. Head Master, M E School, Majilpur.
721(S)	,, Tara Nath ..	Naihati ..	.. Naihati	do ..	.. Rice Mill Overseer.
	D				
722	Dalal, Durgapado ..	Hasnabad ..	.. Thuba, P O Taki	Hindu ..	.. Landholder.
723	,, Jnanendra Nath ..	Ditto ..	.. Ditto	do ..	.. ditto.
724	Damari, Lalit Mohan ..	Bhangore ..	.. Narikelberia	do ..	.. Zamindar

725	Darai Swami, C S	..	Bhowanipore	..	..	23-A, Mahendra Road East, of Southern part.	do ..	.. Engineer.
726(S)	Das, Ajit Kumar ..	..	Entally	..	..	24, South Road ..	.. do ..	.. Zamindar.
727	,, Aghore Nath	..	Tollygunge	..	..	17-1, Nepal Bhattacharji Street ..	do ..	.. Superintedent, Secretary's Office, Calcutta Corporation.
728	,, Akhoy Kumar	..	Alipore	..	..	Bengal Survey Office..	.. do ..	.. B A Survey Drawing Department.
729	,, Ashutosh ..	..	Cossipore	..	..	47, South Sinthi Road ..	.. do ..	.. Landholder.
730	,, Amulya Charan	..	ditto	..	..	2, Central Sinthi Road	.. do ..	.. Landholder and Contractor.
731	,, Amburish Chandra	..	Hasnabad	..	..	Taki	.. do ..	.. Commissioner, Taki Municipality.
732	,, Anil Kumar, BA	..	Bijpur	..	..	Bijpur	.. do ..	.. Clerk, Halishahar Stores, E B Ry.
733	,, Basanta Kumar	..	Behala	..	..	Gholshapore ..	.. do ..	.. Clerk, Nestle's and Anglo Swiss Condensed Milk Co, No. 4, Garstin Place, Calcutta.
734(S)	,, Bhupendra Ch	..	Bhowanipore	..	..	99-B, Kalighat Road ..	.. do ..	.. Professor, Presidency College, Calcutta.
735(S)	,, Binoy Krishna	..	Entally	..	..	24-C, South Road ..	.. do ..	.. Zamindar.
736	,, Bipin Behari	..	Titagarh	..	..	Charnock	.. do ..	.. Head Clerk, Titagarh Municipal Office.
737(S)	,, Bijoy Krishna	..	Entally	..	..	24-B, South Road ..	.. do ..	.. Zamindar.
738(S)	,, Bhut Nath	..	Kulpi	..	..	Gabberia	.. do ..	.. Head Master, Gabberia H E School.
739	,, Dhirendra Nath	..	Magrahat	..	..	Multi	.. do ..	.. Clerk, Stephen and Sons, Calcutta.
740	,, Digambar ..	..	Cossipore	..	..	Rajabagan Lane ..	.. do ..	.. Landholder.
741	,, Gobardhan	..	Bhowanipore	..	..	36, Sambhu Nath Pandit Street ..	do ..	.. Merchant.
742	,, Gokul Chandra	..	Barrackpore	..	..	Sadar bazar ..	.. do ..	.. ditto.
743	,, Gosai Charan	..	Cossipore	..	..	73, South Sinthi Road	.. do ..	.. Contractor and Landholder.

Serial No.	Name.	Thana.	Place of abode—Village, road or street.	Nationality.	Quality or occupation.
	D				
744	Das, Gour Charan ..	Cossipur ..	.. 9, Kedar Das Lane	Hindu ..	.. Contractor and Landholder.
745	,, Gour Mohan ..	Magrahat ..	.. Sibpur, P O Multi	do ..	.. Landholder.
746	,, Gopi Krishna ..	Budge-Budge ..	.. Sherangabad, P O Budge-Budge ..	do ..	.. Head Clerk, Caledonian Jute Mills.
747	,, Gosta Behari ..	Maheshtala ..	.. Krishtanagar	do ..	.. Brick Merchant.
748	,, Hore Krishna ..	Sonarpur ..	.. Rajpur	do ..	.. Trader.
749	,, Hemanta Kumar ..	Baraset ..	.. Nawpara, Baraset P O ..	do ..	.. Government Electrical Engineer.
750 (S)	,, Mr J N	Beliaghata ..	.. 57, Raja Dinendro Narain Street	do ..	.. Coal Merchant.
751	,, Jnanendra Nath ..	Khardah ..	.. Titagarh, Chowdhuripara ..	do ..	.. Accountant, Thomas Duff, Calcutta.
752 (S)	,, Jnanendra Nath, BA ..	Barrackpore ..	.. Sadar Bazar, Golamahal ..	do ..	.. Teacher, Debi Prosad H E School.
753	,, Kanai Lal	ditto ..	.. 12, Palmer Bazar Road ..	do ..	.. Landholder.
754	,, Kanailal, BA ..	Baruipur ..	.. Madarat	do ..	.. 2nd Master, Madarat H E School.
755	,, Kartic Chandra ..	Baraset ..	.. Nibodhoi, P O Duttapukur ..	do ..	.. Trader.
756	,, Krishna Dhan ..	Tollygunge B P	.. Dhakuria village and P O ..	do ..	.. Teacher.
757	,, Khetra Nath ..	Bhowanipur ..	.. 36-1, Sambhu Nath Pandit Street ..	do ..	.. 2nd Clerk, Coal Audit Section, E I Ry.
758	,, Lal Behari	Baraset ..	.. Baraset	do ..	.. Trader.
759	,, Manmatha Nath ..	Chitpur ..	.. 56, Belgachia Road	do ..	.. Landholder.

760	„	Manmatha Nath	..	Cossipore	..	..	Rathtala, South Sinthi Road	..	do	..	..	Landholder and Contractor.
761	„	Murali Dhar	..	Bhangore	..	..	Chhegoalia	..	..	do	..	.. Landholder.
762	„	Nagendra Nath	..	Bistupur	..	..	Amtola ..	..	..	do	..	.. Naib.
763	„	Nagendra Nath	..	Baranagar	..	..	Areadah ..	..	..	do	..	.. Head Clerk, Kamarhati Jute Mill.
764	„	Narayan Chandra	..	Nawapara	..	..	Ichapur ..	..	..	do	..	.. Head Parcel Clerk, E B Railway, Sealdah.
765	„	Naresh Chandra	..	Sonarpore	..	..	Gazipore ..	..	..	do	..	.. Merchant and Contractor.
766	„	Narendra Nath	..	Budge-Budge	..	..	Dakshin Bawali, P O Bawali	..	do	..	..	Landholder (He generally resides at 11, Ram Banerji's Lane, Bowbazar, Calcutta.)
767	„	Niranjan ..	..	Chitpore	..	..	18, Barrackpore Trunk Road	..	do	..	..	Assistant teacher, Raja Manindra H. E. School.
768	„	Nritya Gopal	..	Cossipore	..	..	73, South Sinthi Road	..	do	..	..	Contractor and Landholder.
769	„	Panna Lal ..	..	Khardah	..	..	Khardah ..	..	..	do	..	.. Audit Superintendent, Accountant-General, Bengal.
770	„	Phani Lal ..	..	Alipore	..	..	7-4, Gopalnagar Road	..	do	..	..	Head Typist, Whiteaway, Laidlaw & Co.
771	„	Prokash Chandra	..	Sonarpur	..	..	Rajpur ..	..	..	do	..	. Trader.
772	„	Pran Krishna	..	Watgunge	..	..	3-1, Durgadas Mukherjee Lane	..	do	..	..	Merchant.
773	„	Priya Nath	..	ditto	..	..	ditto ..	..	..	do	..	.. ditto.
774	„	Sagorelal ..	..	Khardah	..	..	Khardah ..	..	..	do	..	.. Superintendent of the Deputy Comptroller's Office, Calcutta Currency.
775	„	Sanyashi Charan	..	Watgunge	..	..	4, Mohonchand Road ..	..	..	do	..	.. Private gentleman.
776 (S)	„	Sarat Kumar	..	Falta	..	..	P O Shaipore, village Kataldanga ..		..	do	..	.. Landholder.
777	„	Sashi Bhusan	..	Sonarpore	..	..	Gobindapur ..	..	..	do	..	.. Merchant.

Serial No.	Name.	Thana.	Place of abode—Village, road or street.	Nationality.	Quality or occupation.
	D				
778	Das, Shama Pada ..	Beniapukur ..	.. 156, Linton Street	Hindu ..	.. Landholder.
779	,, Chaudhuri, Haribar ..	Entally ..	.. 91, Chingrighata Road ..	do ..	.. ditto.
780	,, Tarini Charan ..	Hasnabad ..	.. Bylani	do ..	.. Service.
781	,, Gupta, Birajmohan, MB	Tollygunge ..	.. P 365, Russa Road	do ..	.. Professor, School of Tropical Medicine.
782	,, ,, H C	ditto ..	.. Bengal Technical Institute, Jadabpur.	do ..	.. Superintendent, Bengal Technical Institute.
783	,, ,, Sudhangshu Bhusan	Manicktala ..	.. 3, Madhusudan Mukherji Lane ..	do ..	.. Clerk, Andrew Yule & Co, Calcutta.
784	,, ,, Jogesh Chandra ..	ditto ..	.. 47, Manicktala Main Road ..	do ..	.. Clerk, Bengal Chemical Works.
785	,, ,, Jatish Chandra ..	Baranagar ..	.. Kutighat	do ..	.. Sanitary Inspector, Baranagar Municipality.
786	,, ,, Khitish Chandra ..	Khardah ..	.. Khadi Pratishthan Office, Sodepore	do ..	.. Ink Merchant.
787	,, ,, Nakuleswar ..	Bhowanipore ..	.. 14-C, Gobinda Ghosal Lane ..	do ..	.. Clerk, Bengal Forms Department.
788	,, Nalinakha	Manicktala ..	.. 28, Badridas Temple Street ..	do ..	.. Merchant.
789	,, Kayal, Surendra Nath	Sonarpur ..	.. Rajpur Feeder Road	do ..	.. Head Clerk, La Martinière College, Calcutta.
790	,, Srinivas	Baranagar ..	.. Pramanik Ghat Road	do ..	.. Retired Inspector, Calcutta Corporation.
791	,, Gupta, Mahendra Nath	Bhowanipore ..	.. 52, Kalighat Road	do ..	.. Clerk, I-G of Prisons' Office.
792	,, Amarendra Nath ..	Baraset ..	.. Nibadhui	do ..	.. Teacher, Nibadhui H E School.
793	,, Amode Nath ..	Baruipur ..	.. Baruipur Road	do ..	.. Landholder.
794	,, Bamapada ..	Saugore ..	.. Nonachak, Moriganga P O ..	do ..	.. ditto.

795	„	Bankim Chandra	..	Magrahat	..	..	Usti	..	..	..	do	..	.. ditto.
796	„	Beni Madhab	..	Sonarpur	..	..	Kamerabad	..	..	do	..	..	Clerk, Ralli Brothers, Calcutta.
797	„	Barada Charan	..	Kulpi	..	..	Karnajali P O	..	..	do	..	..	Landholder.
798(S)	„	Bidya Das	..	Joynagar	..	..	Majilpur	..	..	do	..	..	Zaminder and Member, Sadar Local Board.
799	„	Bijoy Krishna	..	Hasnabad	..	..	Sutirati	..	..	do	..	..	Landholder.
800	„	Bijendra Krishna	..	Ballygunge	..	..	3, Valmeek Street	..	..	do	..	..	License Inspector, Calcutta Corporation.
801	„	Birendra Krishna	..	Joynagar	..	..	Majilpur	..	..	do	..	..	Zamindar.
802	„	Charu Chandra	..	Cossipore	..	..	20, Cossipore Road	..	..	do	..	..	Landholder.
803	„	Debendra Nath	..	Beliaghata	..	..	29-A, Jogipara Road	..	..	do	..	..	Supervisor, Indian Patent Stone Factory, Bird & Co.
804	„	Dokari Bhusan	..	Baraset	..	..	Jagulia, P O Choto Jagulia	..	do	..	..	Clerk, Martin & Co.	
805	„	Hari Das	..	Beniapukur	..	..	6, Beniapara Lane	..	..	do	..	..	Assistant, Messrs Shaw Wallace & Co.
806	„	Harendra Nath, BA	..	Bhowanipur	..	..	29, Allenby Road	..	..	do	..	..	Teacher, Paddapukur Institution.
807	„	Hari Narain	..	Maheshtala	..	..	Jagannathnagore, P O Maheshtala			do	..	..	Landholder.
808	„	Hem Nath	..	Magrahat	..	..	Gokarni, P O Magrahat	..	do	..	..	Service-holder.	
809	„	Hriday Nath	..	Sonarpur	..	..	Kamerabad	..	..	do	..	..	ditto.
810	„	Jadu Nath	..	Baduria	..	..	Arbelia	..	..	do	..	..	Government Pensioner.
811	„	Jyotish Chandra, BA		Magrahat	..	..	Usti	..	..	..	do	..	.. Landholder.

Serial No.		Name.	Thana.	Place of abode—Village, road or street.	Nationality.	Quality or occupation.
		D				
812	Das,	Khagendra Nath, BA	Joynagar ..	.. Majilpur ..	.. Hindu ..	.. Clerk, Verification Department of Accountant-General, Bengal's Office, Paper Currency Buildings, Calcutta.
813	,,	Jatindra Nath ..	Magrahat ..	.. Multi, P O Multi ..	.. do ..	.. Service-holder.
814	,,	Jatindra Nath, BA ..	Budge-Budge ..	.. Nischintapur ..	.. do ..	.. Head Master, H E School, Kalipore.
815	Datta,	Kali Das ..	Joynagar ..	.. Majilpur	.. do ..	.. Zamindar.
816	,,	Karuna Moi ..	Bhowanipur ..	.. 17, Chandra Nath Chatterjee Street	do ..	.. Landlord.
817	,,	Khagendra Nath ..	Baraset ..	.. Nibadhai, P O Dattapukur ..	do ..	.. Assistant, Ralli Brothers & Co.
818	,,	Kishori Mohan ..	Kulpi ..	.. Ram Chandrapur, P O Kulpi ..	do ..	.. Landholder.
819	,,	Krista Kishore ..	Alipore ..	.. 21, Mayerpur Road	do ..	.. Clerk, Calcutta Corporation.
820(S)	,,	Mahendra Nath, MA ..	Rajarhat ..	.. Narayanpore	do ..	.. Asstt, Administrator-General's office.
821	,,	Mrinmay ..	Diamond Harbour	.. Kalagachia, P O Sarisa ..	do ..	.. Landholder.
822(S)	,,	Manindra Narain, BA	Joynagar ..	.. Majilpur	do ..	.. Zamindar.
823	,,	N, BA	Chitpur ..	.. 18, B T Road	do ..	.. Assistant Teacher, Raja Manindra H E School.
824	,,	Natar Chandra ..	Alipore ..	.. 68-B, Mayerpur Road	do ..	.. Merchant
825	,,	Nibaran Chandra ..	Magrahat ..	.. Multi	do ..	.. Clerk, Coaching Office, E B Ry.
826	,,	Nibaran Chandra ..	Bistupur ..	.. Jaichandipur, P O Bawali ..	do ..	.. Merchant and Banker.
827	,,	Panchanan ..	Entally ..	.. 63-3, Ananda Palit Road ..	do ..	.. Businessman.

828	,,	Prafulla Kumar, BA	..	Beliaghata	..	..	26-2, Jugipara Lane	..	..	do	..	..	Clerk, Chief Accountant Office, E I R.
829	,,	Pannalal	..	Entally	..	..	47, Ananda Palit Road	..	..	do	..	..	Businessman.
830(S)	,,	Promod Kumar	..	Watgunj	..	..	20, Monshatolla Lane	..	..	do	..	..	Clerk, Calcutta Corporation.
831	,,	Pulin Behari	..	Magrahat	..	..	Gokarni ..	..	..	do	..	..	Landholder.
832	,,	Ram Gopal	..	Budge-Budge	..	..	Budge-Budge	..	..	do	..	..	Sub-Overseer, Asiatic Petroleum Co's Depôt at Budge-Budge.
833	,,	Sailendra Nath	..	Tollygunge	..	..	120A, Lansdowne Road	..	..	do	..	..	Store Department, Calcutta Corporation.
834	,,	Sailendra Nath	..	Alipore	..	..	5-B, Gopalnagar Road..	..	..	do	..	..	Merchant.
835(S)	,,	Sarat Chandra, BA	..	Joynagar	..	..	Kucholpara, Joynagar ..	..	..	do	..	..	Head Master, J M Training School, Joynagar.
836	,,	Sarat Chandra	..	Sonarpur	..	..	Rajpur	..	..	do	..	..	Contractor.
837	,,	Satis Chandra	..	Barrackpore	..	..	Bazaz Mahal	..	..	do	..	..	Clerk, Palta Waterworks.
838	,,	Satis Chandra	..	Magrahat	..	..	Multi, P O Multi	..	..	do	..	..	Service-holder.
839	,,	Sital Chandra	..	Chitpur	..	..	22, Simlaipara Lane	..	..	do	..	..	Clerk, E B Railway.
840	,,	Satyendra Nath	..	Cossipore	..	..	54, South Sinthi Road	..	..	do	..	..	Contractor and Landholder.
841	,,	Siva Das	..	Bhowanipore	..	..	47, Girish Mukherji Road	..	..	do	..	..	Zamindar.
842	,,	Subodh Nath	..	Baruipur	..	..	Baruipur	..	..	do	..	..	Zamindar, Baruipur Municipality.
843	,,	Sudhir Krishna	..	Joynagar	..	..	Majilpur	..	..	do	..	..	Zamindar.
844	,,	Sidhu Gopal	..	Ballygunge	..	..	8, Earl Street	..	..	do	..	..	Merchant.
845	,,	Sujay Krishna	..	Baranagar	..	..	Paramanik Ghat Road	..	..	do	..	..	ditto.

Serial No.	Name.	Thana.	Place of abode—Village, road or street.	Nationality.	Quality or occupation.
	D				
846	Datta, Surendra Nath	.. Baraset ..	.. Bamunmura	Hindu ..	.. Landholder.
847	,, Susil Gopal	.. Joynagar ..	.. Majilpur	do ..	.. Undergraduate, Zamindar.
848	,, Susil Kumar	.. Beliaghata ..	.. 58, Garpar Road	do ..	.. Assistant Librarian, Commercial Library.
849	,, Tulshi Das	.. Bijpur ..	.. Bijpur	do ..	.. Head Clerk, Halisahar Stores, E B Ry.
850	Dey, Apurba Krishna	.. Beliaghata ..	.. 1-1, Palmer Bazar Road ..	do ..	.. Merchant.
851	,, Haran Chandra	.. Bhowanipore ..	.. 92, Russa Road	do ..	.. Manager, Dutta, Mukherjee & Co, Druggist's shop.
852	,, Haridhan	.. ditto ..	.. 78, Kalighat Road	do ..	.. Landlord.
853	,, Amrita Lal	.. Sonarpur ..	.. Kamerabad ..	do ..	.. Landholder.
854	,, Haripada	.. Baruipur ..	.. Dudnoy, P O Ramnagar ..	do ..	.. ditto.
855	,, Hirendra Nath	.. Chitpur ..	.. 16, Pike Para Raja Monindra Road	do ..	.. Zamindar and author of miscellaneous books.
856	,, Jadu Gopal	.. ditto ..	.. Tala North Suburban School ..	do ..	.. Senior Teacher, North Suburban School, Tala
857	,, Kartic Chandra	.. Beliaghata ..	.. 54, Sastitala Road	do ..	.. Clerk.
858	,, Krishna Chandra	.. ditto ..	.. 21, Peari Mohan Sur Lane ..	do ..	.. Landholder.
859	,, Lalit Mohan	.. Habra ..	.. Rajibpur village and P O ..	do ..	.. President Panchayat
860(S)	,, Monindra Nath	.. Alipore ..	.. 13-1, Joynuddin Mistry Lane ..	do ..	.. Engineer (Retired)
861	,, Narendra Kumar	.. Baruipur ..	.. Ramnagar, P O South Ramnagar ..	do ..	.. Overseer

862(S)	„	Nitai Hari, BA	..	Habra	..	..	Khatora, P O Gobardanga, at present 11B, Mohan Lal Street, Shambazar.	do	.. Shorthand reporter.
863(S)	„	Prafulla Chandra	..	Cossipore	..	..	1, Dum-Dum Road	do	.. Landholder.
864	„	Prasad Chandra	..	Beniapukur	..	..	2-B, Linton Street	do	.. Clerk, Burn & Co
865(S)	„	Probodh Chandra, BA, BT.		Beliaghata	..	..	Narikeldanga George H E School ..	do	.. Head Master, Narikeldanga George H E School
866	„	Purna Chandra	..	Entally	..	..	46, Pottery Road	do	.. Landlord.
867(S)	„	Rajendra Nath	..	Baraset	..	..	Koyra	do	.. Landholder.
868	„	Ranadhir	..	Alipore	..	..	7-2, Gopalnagar Road	do	.. School Master.
869	„	Sachindra Krishna	..	Sonarpur	..	..	Boral	do	.. Clerk, Merchant Office
870	„	Sakha Nath	..	Alipore	..	..	27, Alipore Road	do	.. School Master and Landholder.
871	„	Sanyashi Charan	..	Watgunj	..	..	7, Micheal Dutt Street ..	do	.. Contractor.
872	„	Satish Chandra	..	Baruipur	..	..	Dhapdhapi P O	do	.. President, Panchayat and Landholder.
873	„	Surendra Nath	..	Cossipore	..	..	32, Ratan Babu's Road ..	do	.. Landholder.
874	„	Shamapadu	..	Basirhat	..	..	Itinda	do	.. Cloth Merchant.
875(S)	„	Surendra Nath, BA	..	Cossipore	..	..	32, Ratan Babu's Ghat Road ..	do	.. Assessor. Cossipore-Chitpur Municipality.
876	„	Suresh Chandra	..	Habra	..	..	Prithiba, P O Prithiba.. ..	do	.. Head Clerk, Collection Department, Calcutta Corporation.
877	Mitra, Tinkari		..	Bhowanipore	..	..	10-C, Puddopukur Road ..	do	.. Landholder.
878	De,	Umesh Chandra	..	Canning Town	..	..	Canning Town	do	.. Deputy Agent, Port Canning Co, Ltd.

Serial No.	Name.	Thana.	Place of abode—Village, road or street.	Nationality	Quality or occupation.
	D				
879	Deb, Shital Krishna ..	Diamond Harbour ..	Diamond Harbour	Hindu	Clerk, E B Railway Audit Office, Sealdah.
880	„ Bhupendra Nath ..	Ballygunj	12-B, Chakraberia Lane ..	do	Service-holder.
881(S)	„ Jnanendra Nath, BA ..	Joynagore	Mazilpur	do	Assistant Head Master, Joynagore Institution
382(S)	„ Nirode Chandra ..	Mathurapur	Mathurapur	do	Landholder.
883(S)	„ Rohini Kumar ..	Manicktala	56, Gouribari Lane	do	Manager, Bhowani Engineering and Trading Co.
884	Dhar, Asutosh ..	Budge-Budge	Pandit's Road, Budge-Budge ..	do	Contractor.
885(S)	„ Jogesh Chandra, MA ..	Diamond Harbour ..	Hatuganj P O	do	Head Master, Hatuganj H E School
886	Dhole, Banwari Lal ..	Baranagore	Bon-Hooghly	do	Merchant
	G				
887	Ganguli, Banamali ..	Alipore	42-1, Chetla Road	Hindu	Merchant.
888(S)	„ Binode Bihary, Rai Saheb	Khardah	Khardah	do	Government Pensioner.
889	„ Bhupendra Nath ..	Watgunge	8-1, Jagannath Sarkar Lane ..	do	Clerk, Chief Engineer's Office, B N Railway.
890	„ Bipin Bihari ..	Khardah	Khardah, Rash Khola ..	do	Late Auditor of the Pay Examiner's Office, Calcutta.
891	„ Debendra Nath ..	Bhowanipore	61, Kansaripara Road ..	do	Clerk, Merchant Office.
892	„ Dhirendra Nath ..	Noapara	Garulia	do	Sanitary Inspector, Garulia Municipality.
893	„ Ganesh Chandra ..	Pratapnagar	Narayanpur, P O Pratapnagar ..	do	Service-holder.

894	Gangully,	Janaki Kanta	..	Entally	..	..	9, Ananda Palit Road	..	do	.. Clerk.
895(S)	,,	Jamini Prakash	..	Banipukur	..	..	171, Lower Circular Road	..	do	.. Zamindar.
896(S)	,,	N. B. ..	..	Ballygunge	..	..	100, Lansdowne Road	..	do	.. Business-man.
897(S)	,,	N ..	..	Tollygunge	..	..	P183, Ballygunge Avenue	..	do	.. Service-holder.
898	,,	Phani Bhushan	..	Beliaghata	..	..	3, Sitalatala Lane ..	..	do	.. Clerk.
899(S)	,,	Makhan Lal (Rai Bahadur)		Ballygunge	..	..	3A, Clerk Street ..	..	do	.. Landlord.
900	,,	Surendra Nath	..	Barrackpore	..	..	Manirampur, Barrackpore	..	do	.. Clerk, Cossipore Volunteer's Office, Barrackpore.
901	,,	Surath Lal	..	Chitpur	..	..	4, Bonomali Chattarji Street	..	do	.. Teacher, Hare School.
902	Gayen,	Banamali	..	Hasnabad	..	..	Khejurberia ..	..	do	.. Landholder.
903	,,	Bipin Bihari	..	ditto	..	..	Dulduli ..	..	do	.. ditto.
904	,,	Rajani ..	..	Kulpi	..	..	Kasipore, P O Karanjali	..	do	.. Landholder and School Pandit.
905	,,	Santosh Kumar	..	Basirhat	..	..	Dhanyakuria ..	..	do	.. Zamindar.
906	Gazi,	Abdul Latif ..	..	Mathurapur	..	..	Chandbhasa, P O Kasinagar	..	Muhammadan	.. Landholder.
907(S)	,,	Muhammad Shariat-ullah, B A		Hasnabad	..	..	Kolutola, P O Hasnabad	..	do	.. ditto
908	Ghatak,	Ganesh Chandra	..	Manicktala	..	..	151-E, Raja Dinendra Narayan Street.		Hindu	.. .. Landholder and Merchant.
909	,,	Hari Narayan	..	Basirhat	..	..	Basirhat	..	do	.. .. Landholder.
910	,,	Sarat Chandra	..	Bijpur	..	..	Bijpur	..	do	.. .. Clerk, D M Office, E B Ry, Bijpur.

Serial No.		Name.	Thana.	Place of abode—Village, road or street.	Nationality.	Quality or occupation.
		G				
911	Ghosh,	Abani Nath ..	Naihati ..	.. Naihati	Hindu ..	.. Clerk, office of the Inspector of Schools, Hooghly.
912(S)	„	Abhoy Kali, MSC ..	Beliaghata ..	.. 90, Manicktala Main Road ..	do ..	.. Chemist, B C and P W.
913	„	Abinash Chandra ..	Rajarhat ..	.. Kundu Lane, Belgachia, Calcutta ..	do ..	.. Clerk, Maclean & Co, Calcutta.
914	„	Ajit Kumar ..	Tollygunge ..	.. Sikha Sanga, Bistupur ..	Christian	.. Teacher, L M S Institution.
915	„	Akshoy Kumar ..	Habra ..	.. Rajibpur / Fort William, Calcutta ..	Hindu ..	.. Clerk, Military Works, Fort William.
916	„	Ambica Charan ..	Barrackpore ..	.. Barrackpore Government School ..	do ..	.. Assistant Head Master.
917(S)	„	Ambica Das, MA ..	Titagarh ..	.. ditto	do ..	.. Assistant Master.
918	„	Amulya Ratan ..	Baraset ..	.. Jirangacha, Badu ..	do ..	.. Landholder.
919	„	Ashutosh ..	Tolligunge ..	.. P N-4, Monoharpukur Road ..	do ..	.. Overseer, Calcutta Corporation.
920(S)	„	Basanta Kumar, BA ..	Behala ..	.. Shahapore	do ..	.. Assistant, Accounts Department, Corporation of Calcutta, No. 5, Corporation Street, Calcutta.
921	„	Badal Kumar ..	Naihati ..	.. Garifa	do ..	.. Order Supplier.
922	„	Banamali	Garden Reach ..	.. Paharpur Road	do ..	.. Zamindar.
923	„	Bankabehari ..	Deganga ..	.. Arjullapur, P O Sashan ..	do ..	.. Landholder.
924	„	Bankim Chandra ..	Manicktala ..	.. 8-1-A, Wazir Chowdhury Lane ..	do ..	.. Merchant.
925(S)	„	B C	Watgunge ..	.. 14, Hem Chandra Street ..	do ..	.. Zamindar.

926	„	Banku Behari	..	Titagarh	..	..	Titagarh	..	..	do .. .. Lime Merchant, Charnok Village.
927(S)	„	Banku Behari, BA (Oxon) BSc (Cal)		Khardah	..	..	Bandipur	..	..	do .. .. Zamindar and Merchant.
928	„	Basanta Kumar	..	Beliaghata	..	..	9-A, Talpukur Road	..	..	do .. .. Clerk, Calcutta Corporation.
929	„	Bijoy Krishna	..	Khardah	..	..	Panihati	..	..	do .. .. Clerk, Merchant office, Calcutta.
930	„	Benode Behari	..	Basirhat	..	..	Bhabla	..	..	do .. .. Head Master, Bhabla School.
931	„	Bhupal Chandra	..	Nawpara	..	..	Nawabgunge	..	..	do .. .. Landholder.
932	„	Bhupendra Kumar	..	Baruipur	..	..	Ramnagar, P O South Ramnagar	..		do .. .. Teacher.
933	„	Behari Lall	..	Entally	..	..	63, South Road	..	..	do .. .. Clerk.
934	„	Bibhuti Bhusan, BA	..	Baraset	..	..	Bamangachi	..	..	do .. .. Merchant.
935	„	Bibhuti Bhusan	..	Bhowanipore	..	..	37, Kalidas Patitandi Lane	..		do .. .. Accountant, Imperial Bank of India.
936	„	Bijay Krishna	..	Naihati	..	..	Garifa	..	..	do .. .. Clerk, E B Railway, Kanchrapara.
937	„	Bijoy Krishna	..	Bhowanipore	..	..	29 Harish Chatterjee Street	..		do .. .. Merchant.
938	„	Bepin Bihari	..	Budge-Budge	..	..	Budge-Budge	..	..	do .. .. Contractor.
939(S)	„	Bepin Behari	..	Kulpi	..	..	Karanjali P O	..	..	do .. .. Landholder.
940(S)	„	Bishnu Das	..	Basirhat	..	..	Basirhat	..	..	do .. .. Assistant Secretary, Central Bank, Taki.
941	„	Chandi Charan	..	Baruipur	..	..	Atghora, P O Baruipur	..		do .. .. Landholder.
942(S)	„	Chandra Kumar	..	Beliaghata	..	..	10, Rammohan Roy Road	..		do .. .. District Building Surveyor, Calcutta Corporation.

Serial No.	Name.	Thana.	Place of abode—Village, road or street.	Nationality.	Quality or occupation.
	G				
943	Ghosh, Chuni Lal ..	Baduria ..	.. Arbalia ..	.. Hindu ..	.. Landholder.
944	„ Chuni Lal ..	Cossipore ..	.. 13-2, Kedar Das Lane ..	do ..	.. Contractor and Landholder.
945	„ Chandi Prosad ..	Khardah ..	.. Bosepara, Khardah ..	.. do ..	.. Government pensioner.
946	„ Debendra Nath ..	Entally ..	.. 15, South Road, Entally ..	do ..	.. Land-holder and Jeweller.
947	„ Dhirendra Krishna ..	Kulpi ..	.. Kulpi ..	.. do ..	.. Pandit, Guru Training School.
948	„ Dhiresh Chandra ..	Manicktala ..	.. 6, Mohanlal Street ..	.. do ..	.. Landholder.
949	„ Fakir Chandra, BA ..	Tollygunge B P	.. Dhakuria village and P O ..	do ..	.. Clerk, Bengal Secretariat
950	„ Fakir Chandra ..	Naihati ..	.. Chotabudhria ..	.. do ..	.. Clerk, Loco Shop, Kanchrapara.
951(S)	„ Ganesh Chandra, BA ..	Tollygunge ..	.. 23, Hazra Lane ..	.. do ..	.. Correspondence Agent, Howrah Flour Mills
952	„ Gobinda Chandra ..	Bhowanipore ..	.. 86-D, Harish Chattarji Street ..	do ..	.. Sanitary Inspector, Calcutta Corporation.
953	„ Gopal Krishna ..	Baruipur ..	.. Ramnagar, P O South Ramnagar ..	do ..	.. Clerk, Commercial Intelligence Department, 1, Commercial House, Calcutta.
954	„ Gopendra Nath ..	Naihati ..	.. Mitrapara, Naihati ..	.. do ..	.. Clerk, Deputy Inspector-General's Office, and Landholder.
955(S)	„ Hari Das, MA ..	Bhowanipore ..	.. 29-3, Girish Mukherjee Road ..	do ..	.. Landlord.
956	„ Hari Dass ..	ditto ..	.. 3, Mahendra Road ..	.. do ..	.. Port Commissioner's clerk.
957	„ Hari Nath ..	Kulpi ..	.. Karanjali P O ..	.. do ..	.. Landholder.
958	„ Hari Pada ..	Baruipur ..	.. Sashan, P O Baruipur ..	.. do ..	.. Clerk, Custom House, Calcutta.

959	„	Haripada	..	Bhowanipore	..	..	148, Haris Mukherjee Road	..	do	..	.. Landlord.
960	„	Hiran Chandra	..	Hasnabad	..	..	Taki	..	do	..	.. Zamindar.
961	„	Hrishikesh	..	Khardah	..	..	Sukchar, Kulinpara	..	do	..	.. Merchant.
962	„	Indu Bhusan	..	Hasnabad	..	..	Taki	..	do	..	.. Businessman.
963	„	Jadab Chandra	..	Alipore	..	..	16, Durgapur Lane	..	do	..	.. School Master.
964(S)	„	Jagabandhu	..	Beliaghata	..	..	2, Gauri Sankar Ghosal Lane	..	do	..	.. Late Head Master, Seal's Free School.
965	„	Jatindra Kumar	..	Baruipur	..	..	Ramnagar P O and village	..	do	..	.. Landholder and President Panchayat.
966	„	Janaki Nath	..	Tollygunge BP		..	Dhakuria	..	do	..	.. Landholder.
967	„	Jatindra Mohan	..	Joynagore	..	..	Joynagore, Kuchalpara	..	do	..	.. ditto.
968	„	Jatindra Nath	..	Naihati	..	..	Garifa	..	do	..	.. Clerk in the office of the Commissioners for the Port of Calcutta.
969	„	Jatindra Nath	..	Hasnabad	..	..	Rameswarpur	..	do	..	.. Landholder.
970	„	Jatish Chandra	..	Magrahat	..	..	Kaknapara	..	do	..	.. ditto.
971	„	Jatindra Mohan	..	Naihati	..	..	Naihati	..	do	..	.. Municipal Commissioner.
972	„	Jatindra Nath	..	Harwa	..	..	Salipore	..	do	..	.. Landholder.
973	„	Jatindra Lal	..	Bhowanipore	..	..	46, Haris Chatterjee Street	..	do	..	.. Clerk, Surgeon-General's office, Writers' Buildings.
974	„	Jnanendra Nath	..	Rajarhat	..	..	Bistupur, P O Rajarhat-Bistupur	..	do	..	.. Landholder.
975	„	Jnanendra Nath	..	Naihati	..	..	Naihati, Mitrapara	..	do	..	.. Clerk in the office of the Inspector-General of Police, Calcutta.

Serial No.	Name.	Thana.	Place of abode—Village, road or street.	Nationality.	Quality or occupation.
	G				
976	Ghosh, Jnanendra Nath	Bhowanipore	49A, Girish Mukharjee Road	Hindu	Landlord.
977	„ Kali Das, Bsc	Sonarpur	Kodalia	do	Contractor.
978	„ Kali Pada	Ekbalpore	3, Gopal Kristo Ghose Lane	do	Clerk, B N Railway.
979	„ Kali Charan	Sonarpur	Boral	do	Clerk, office of the Controller of Telegraph Stores, Alipore.
980	„ Kanailal	Ballygunge	70, Lansdowne Road	do	Businessman.
981	„ Kasi Prosad	Khardah	Khardah	do	Zamindar Retired Commissariat Agent, Military Department.
982(S)	„ Khetra Pal	Habra	Rajibpur	do	Landholder.
983	„ Kiran Chandra	Garden Reach	73-3-3, Garden Reach Road	do	Shed Clerk, Port Commissioners' Traffic Department.
984	„ Kisto Dhon	Alipore	36A, Judge's Court Road	do	Businessman.
985	„ Krishna Chandra	Bijpur	Halisahar, Sarkarpara	do	Clerk, Store Office, Kanchrapara, E B Ry.
986	Ganguly, Durgadas	Tollygunge (C P)	P 183, Ballygunge Avenue	do	Inspector of Accounts, Port Commissioners.
987	Ghosh, Kristo Dhone	Mahestala	Mahestala	do	Merchant and Landholder.
988	„ Lalit Mohan	Baraset	Village Chhoto Jagulia	do	
989	„ Mazumdar, Kumar Prasanna.	Naihati	Naihati	do	Merchant and Mill-owner.
990	„ Nirmal Chandra	Basirhat	Dhanyakuria	do	Head Master, Dhanyakuria H E School.

991	,,	Kumud Nath	..	Dum-Dum	..	..	Dighla	..	..	do	..	..	Landholder.
992	,,	Kristo Mohan	..	Behala	..	..	Muradpur, P O Barisa		..	do	..	..	Business.
993	,,	Kunja Behary	..	Alipore	..	..	4, Chetla Hat Road	..	..	do	..	..	Zamindar.
994	,,	Lalit Mohan	..	Entally	..	..	1, Pottery Road	..	..	do	..	..	Contractor.
995	,,	Lalit Mohan, BA	..	Habra	..	..	Rajibpur	..	..	do	..	..	Teacher, Rajibpur H E School.
996	,,	Mahendra Nath	..	Bhowanipore	..	..	11-B, Mohini Mohan Road		..	do	..	..	House-owner.
997	,,	Makhan Lal	..	Baduria	..	..	Taragunia, P O Taragunia		..	do	..	..	Special Assistant, National Life Insurance Company. c-o, Messrs Martin & Co, Calcutta.
998	,,	Makhan Lal	..	Bhangore	..	..	Jagulgachi	.	..	do	..	..	Zamindari Employee.
999	,,	Mani Mohan	..	Mahestala	..	..	Daulatpur, Mahestala P O		..	do	..	..	Clerk, office of the Controller of Military Accounts, Calcutta.
1000	,,	Makhanlal	..	Budge-Budge	..	..	Feeder Road, Budge-Budge		..	do	..	..	Clerk, Jardine Skinner & Co.
1001	,,	Manmatha Nath	..	Deganga	..	..	Hadipore	..	..	do	..	..	Landholder.
1002	,,	Manmatha Nath	..	Ballygunge	..	..	10-B, Chakraberia Lane		..	do	..	..	License Inspector, Calcutta Corporation.
1003	,,	Mani Mohan	..	Basirhat	..	..	Sangrampur	..	..	do	..	..	President Panchayat.
1004	,,	Nagendra Nath	..	Budge-Budge	..	..	N C Ghosh Road	..	..	do	..	..	Contractor
1005	,,	Nagendra Nath	..	Rajarhat	..	..	34, Shampukur Road, Calcutta		..	do	..	..	Clerk, Kellner & Co.
1006	,,	Nagendra Nath	..	Metiabruz	..	..	Kankhuli	..	..	do	..	..	Landholder and Money-lender.
1007	,,	Nalini Kanta	..	Rajarhat	..	..	Kaikhali village, Dum-Dum P O		..	do	..	..	Landholder.
1008	,,	Nalini Ranjan	..	Bhowanipore	..	..	17, Gobinda Ghosal Lane		..	do	..	..	Zaminder.

Serial No.	Name.	Thana.	Place of abode—Village, road or street.	Nationality.	Quality or occupation.
	G				
1009	Ghosh, Nani Gopal, BL	Habra	Rajibpur	Hindu	Teacher, A V M School.
1010	„ Narayan Chandra	Baranagore	Bon-Hooghly	do	Zamindar.
1011	„ Narendra Nath	Beliaghata	68, Beliaghata Main Road	do	Landholder.
1012	„ Narendra Nath	Basirhat	Saipala	do	ditto.
1013	„ Narendra Nath	Sonarpur	Boral	do	ditto.
1014	„ Nut Behari	Watgunge	5, Ashu Babu Lane	do	Zamindar.
1015	„ Panchanan	Bhangore	Jagulgachi	do	ditto.
1016	„ Panchanan	Rajarhat	Bistupur, P O Rajarhat-Bistupur	do	Landholder.
1017	„ Panchanan	Beliaghata	103, Beliaghata Main Road	do	Straw Merchant.
1018	„ Panchanan	Tollyganj B P	Kamduary, P O Garia	do	Clerk
1019	„ Parbati Charan	Budge-Budge	Kalipore	do	Landholder.
1020	„ Pashupati	Joynagore	Joynagore, Mitrapara	do	Overseer, Joynagore Municipality
1021	„ Phani Bhusan	Beliaghata	28-A, Raja Dinendra Narain Street	do	Clerk, Administrator-General's Office, Calcutta.
1022	„ Phanindra Nath	Budge-Budge	Telari, P O Barul	do	Landholder.
1023	„ Prafulla Kumar	Sonarpore	Harinavi	do	Zamindar.
1024(S)	„ Pramatha Nath, BA, BT	Tollygunge	Mahajanputti, Tollygunge	do	Teacher, Hare School.

1025	,,	Pramatha Nath	..	Habra	..	..	Hatnawpara	..	..	do	..	..	Landholder.
1026	,,	Prasad Chandra	..	Amdanga	..	..	Amdanga Bodai	..	..	do	..	..	ditto and President, U B.
1027	,,	Prio Nath	..	Naihati	..	..	Chotabudhuria	..	..	do	..	..	Landholder.
1028	,,	Promothesh Chandra	..	Bhowanipore	..	..	1-1, Mahesh Chaudhury Lane	..	..	do	..	..	Watering Supervisor, Calcutta Corporation.
1029	,,	Probodh Chandra	..	Basirhat	..	..	Sikra, Kulingram	..	..	do	..	..	Landholder.
1030	,,	Priya Nath	..	Sonarpore	..	..	Jagatdal	..	..	do	..	..	ditto.
1031(S)	,,	Pulin Behari	..	Tollygunge	..	..	Mollahat, Tollygunge P O	..	..	do	..	..	Contractor.
1032	,,	Rajani Kanta	..	Magrahat	..	..	Maitirhat, P O Magrahat	..	..	do	..	..	Service-holder.
1033	,,	Rajendra Nath	..	Belighata	..	..	94, Garpar Road	..	..	do	..	..	Clerk in a merchant office
1034	,,	Ram Prosad	..	Kulpi	..	..	Karanjali P O	..	..	do	..	..	Landholder.
1035	,,	Ramani Mohan	..	Do	..	..	Kulpi	..	..	do	..	..	Naib, Zamindary Katchary Kulpi.
1036	,,	Sailendra Nath	..	Hasnabad	..	..	Saidpur	..	..	do	..	..	Talukdar.
1037	,,	Sarada Prosad	..	Diamond Harbour		..	Narbari, P O Diamond Harbour		..	do	..	..	Pensioner.
1038	,,	Sarat Chandra	..	Magrahat	..	..	Benipur, P O Magrahat		..	do	..	..	School Master.
1039	,,	Sarat Chandra, MSC	..	Tollygunge B P	..	..	Kasba	..	..	do	..	..	Manager, Bengal Soap Works.
1040	,,	Sarat Chandra	..	Bhowanipore	..	..	11/2, Rani Sankari Lane		..	do	..	..	Retired Deputy Superintendent of B P.
1041	,,	Sasi Bhusan	..	Bistupur	..	..	Sukdevpur	..	..	do	..	..	Clerk, Judge's Court, Alipore.

Serial No.	Name.	Thana.	Place of abode—Village, road or street.	Nationality.	Quality or occupation
1042	Ghosh, Satish Chandra	Budge-Budge	Budge-Budge	Hindu	Head Clerk, Cheviot Jute Mill, Chitraganj.
1043	,, Satish Chandra	Habra	Rajibpur	do	Head Clerk, Coal Manager's Office, E I Ry Co, Calcutta.
1044	,, Satish Chandra	Bhowanipore	130, Kalighat Road	do	Merchant.
1045	,, Satya Charan	Baranagore	Belgharia	do	Head Assistant, P W D Office, Calcutta.
1046	,, Shib Chandra	Joynagore	Mazilpur	do	Landholder.
1047	,, Sidheswar	Habra	Prithiba P O	do	ditto.
1048	,, Subodh Krishna, BA	Beliaghata	40, Sitalatala Lane	do	Clerk, Accounts Department, Calcutta Corporation.
1049	,, Sudhanshu Bhusan	Basirhat	Bhabla	do	Assistant Teacher, Bhabla H E School.
1050(S)	,, Surendra Kumar	Manicktala	70-A, Manicktala Main Road	do	Zamindar.
1051	,, Surendra Nath	Bistupur	Joychandipur, P O Bistupur	do	Contractor and landholder.
1052	,, Surendra Nath	Beliaghata	50, Charakdanga Road	do	Landholder.
1053(S)	,, Surendra Nath	Jagatdal	Mulajore, P O Shamnagore	do	Contractor.
1054	,, Suresh Chandra	Baraset	Nilbadhui	do	Landholder.
1055	,, Tarak Chandra	Budge-Budge	Feeder Road, Budge-Budge	do	Service-holder, Bengal Telephone Co.
1056	,, Tin Couri	Entally	31-5, Ananda Gopal Palit Road	do	Coal merchant.
1057	,, Upendra Nath	Naihati	Mitrapara	do	Land-owner.

1058	„	Chaudhury, Nalin Ch	ditto	..	..	ditto	..	do	.. Landholder.
1059	„	(Koley) Satish Chandra	Habra	..	..	Nawpara	..	do	.. ditto.
1060	Ghosal,	Atal Behari	.. Baranagore	..	..	Belgharia	..	do	.. Assistant Cashier, McLeod & Co.
1061	„	Bishnu Charan	.. Baraset	..	..	Barbaria, P O Baraset	..	do	.. Clerk, Sub-Registry Office, Baraset.
1062	„	Bibhuti Bhusan	.. Tollygunge	..	..	Garia, P O Garia	..	do	.. Clerk.
1063	„	Chuni Lal	.. Bistupur	..	..	Joychandipur, P O Bistupur	..	do	.. Service-holder.
1064	„	Haripada ..	.. Manicktala	..	..	145-1, Ultadanga Main Road	..	do	.. Rice mill owner.
1065(S)	„	Jogendra Nath	.. Baranagore	..	..	Ariadah	..	do	.. Retired clerk.
1066	„	Jyotish Chandra	.. Jagatdal	..	..	Thakurpara, Bhatpara	..	do	.. Clerk, Merchant's Office.
1067	„	Kalidas	ditto	..	..	Madrail	..	do	.. Clerk.
1068	„	Krishna Chandra	.. Khardah	..	..	Panihaty	..	do	.. Teacher, Panihaty T N H E School.
1069(S)	„	(Kumar) Satya Mohan	Ekbalpur	..	..	49-2, Circular Garden Reach Road, Bhukailash Garh.		do	.. Zamindar.
1070(S)	„	Nani Lal, BA	.. Baruipur	..	..	Hariharpur ..	..	do	.. Head Master, Gobindapore H E School.
1071(S)	„	Nripendra Nath	.. Beliaghata	..	..	14-2-1, Bahir Mirzapur Road	..	do	.. Broker, Andrew Yule & Co.
1072	„	Panchu Gopal	.. Bhowanipore	..	..	41, Chakraberia Road North	..	do	.. Professor, Howrah College.
1073	„	Prokash Chandra	.. Beliaghata	..	..	4, Gauri Sankar Ghosal Lane	..	do	.. Teacher.
1074	„	Sachindra Nath	.. Falta	..	..	Falta	..	do	.. Landholder.

Serial No.	Name.	Thana.	Place of abode—Village, road or street.	Nationality.	Quality or occupation.
	G				
1075	Ghosal, Satish Chandra ..	Khardah ..	.. Panihati	Hindu ..	.. Teacher, T N H E School.
1076	„ Satya Charan ..	Jagatdal ..	.. Madrail	do ..	.. Teacher, Naihati Mahendra School.
1077	„ Siva Prosad, BA ..	Baranagore ..	.. Belgharia	do ..	.. Teacher.
1078	Gholam, Rahman	Metiabruz ..	.. Metiabruz	Muhammadan	.. Landholder and Assistant Panchayat, Belpukur Union.
1079	„ Rasul ..	Sharupnagor ..	.. Sharupdaha	do ..	.. 2nd Master, Hakimpur M E School
1081	Golam, Sarwar Ahmed ..	Deganga ..	.. Kalsur	do ..	.. Landholder.
1082	Golder, Sultan Hossain ..	Haroa ..	.. Kushangra, Minakhan P O ..	do ..	.. ditto.
1083	„ Abdul Khaleque ..	ditto ..	.. Sonakuria	do ..	.. ditto.
1084	Gossain, Jagatdurlav ..	Khardah ..	.. Khardah, Gossainpar ..	Hindu ..	.. Zamindar.
1085	„ Jogendra Nath (Chatarji).	Amdanga ..	.. Dadpur, P O Majpara	do ..	.. Landholder.
1086(S)	Goswami Khirode Mohon, BA	Bhowanipore ..	.. 43, Lansdowne Road	do ..	.. Manager, Zamindari Estate.
1087	Guha, Devendra Nath ..	Bhangore ..	.. Kharabuba	do ..	.. Zamindari Naib.
1088	„ Mon Mohon ..	Bhowanipore ..	.. 59, Kansaripara Road	do ..	.. Overseer.
1089(S)	„ Rajendra Nath, BA ..	ditto ..	.. 18, Ram Mohan Dutt Road ..	do ..	.. License Inspector, Calcutta Corporation.

1090	„ Raj Kumar	..	Alipore	..	.. 73, Mayorpore Road	..	do	.. Agent, Estate Dr. Satyendra Nath Sircar.
1091	Gupta, P K	..	Bijpore	..	.. Clerks Colony, Kanchrapara	..	do	.. Electrician, E B Ry Workshop.
1092	„ R K	..	Garden Reach	..	.. 42, Garden Reach Road	..	Indian	.. Head Assistant, Kesoram Cotton Mill, Garden Reach.
1093(S)	„ Gopi Nath	..	Canning	..	.. Basanti Kutchari, Basanti P O *via* Canning Town, 24-Parganas		Hindu	.. Superintendent, Mohesh Chandra Land Improvement Co.
1094	„ Rebati Raman, BA	..	Chitpur	..	.. 18, B T Road	..	do	.. Assistant Teacher, Raja Manindra H E School.
1095	„ Rebati Mohan	..	Barrackpore	..	.. Manirampur	..	do	.. Inspector, Waterworks, Palta.
1096	„ Prokash Chandra	..	Bhowanipore	..	.. 40-6, Chaulpati Road	..	do	.. Zamindar.
1097	„ Suresh Chandra	..	Budge-Budge	..	.. Budge-Budge	..	do	.. Head Clerk, Asiatic Petroleum Company, Budge-Budge.
	H							
1098	Hafiz, Abdul Hamid	..	Moheshtola	..	.. Chandannagore, P O Moheshtola	..	Muhammadan	.. Trader and Landholder.
1099	Halder, Abja Prokash	..	Jagatdal	..	.. Bhatpara	..	Hindu	.. Zamindar.
1100	„ Ashutosh	..	Baruipur	..	.. South Garia P O and village	..	do	.. Service-holder.
1101	Haldar, Atul Chandra	..	Beliaghata	..	.. 60, Hara Mohan Ghose Lane	..	do	.. Head Assistant to Electrical Inspector to the Government of Bengal.
1102	„ Bankim Behari	..	Basirhat	..	.. Soladana, Taki P O	..	do	.. Landholder.
1103	„ Bhut Nath	..	Diamond Harbour	..	.. Ramrampur, P O Diamond Harbour		do	.. ditto.
1104	„ Bihari Lal	..	Budge-Budge	..	.. Haldarpara, Budge-Budge	..	do	.. Assistant Store-keeper, Asiatic Petroleum Company's Depôt at Budge-Budge.
1105	„ Bishwa Nath	..	Bhowanipore	..	.. 275, Kalighat Road	..	do	.. Proprietor, Arya Printing Works.

Serial No.	Name.	Thana.	Place of abode—Village, road or street.	Nationality.	Quality or occupation.
	H				
1106	Haldar, Durgadas ..	Kulpi ..	.. Gopalnagar, P O Kulpi ..	Hindu ..	.. Landholder.
1107(S)	„ Hara Lal ..	Budge-Budge ..	.. Budge-Budge, Haldarpara ..	do ..	.. Landholder and Chairman of Budge-Budge Municipality.
1108(S)	„ Hara Mohan ..	Hashnabad ..	.. Dulduli	do ..	.. Head Master of Dulduli M E School.
1109	„ Hara Nath ..	Diamond Harbour	.. Abdulpur, P O Diamond Harbour	do ..	.. Teacher.
1110	„ Hari Das.. ..	Jagatdal ..	.. Bhatpara	do ..	.. Zamindar.
1111	„ Jadu Nath ..	Hashnabad ..	.. Basanhati	do ..	.. Retired School Master.
1112	„ Kartic Chandra ..	Behala ..	.. North Haldarpara, Behala P O ..	do ..	.. Contractor.
1113	„ Jogendra Nath ..	Hashnabad ..	.. Basunhati	do ..	.. Retired Inspecting Pandit of Schools.
1114	„ Kashi Pati ..	Bhowanipore ..	.. 12, Tollygunge Road, also 275, Kalighat Road	do ..	.. Landholder.
1115(S)	„ N K	Barrackpore ..	.. Sadarbazar	do ..	.. Head Master, Devi Prasad H E School.
1116	„ Rakhal Nath ..	Kulpi ..	.. Raipur-Dyarampur	do ..	.. Landholder.
1117	„ Sadhu Charan ..	Bhowanipore ..	.. 9-A, Kali Lane	do ..	.. ditto.
1118	„ Surja Kumar ..	Canning ..	.. Tengrakhali	Christian	.. Merchant.
1119	Hakim Hafez Ahmad Said ..	Metiabruz ..	.. P O Garden Reach	Muhammadan	.. Unani Hakim.
1120	Haji Muhammad Akbar ..	Entally ..	.. 13, Ismail Street	do ..	.. Landholder.
1121	Haji Muhammad Yusuf ..	Beniapukur ..	.. 26-1, Noor Ali Lane	do ..	.. ditto.

1122(S)	Hazra, Charau Chandr	Dum-Dum	Dum-Dum Cantonment	Hindu	Assistant Cashier, E B Railway, Sealdah.
1123	„ Nani Lal	Watgunge	121, Circular Garden Reach Road	do	Merchant.
1124	„ Kanai Lal	ditto	3, Gopal Doctor Road	do	Landlord.
1125	„ Sasadhar	Bistupur	Gouripur	do	Landholder.
1126	Hossein, A S M	Bhowanipore	85, Harish Chatterjee Street	Muhammadan	Zamindar.
1127	Huq, Shamsul	Ballygunge	81, Bundel Road	do	Government pensioner.
1128	„ Zahural	Basirhat	Basirhat	do	Landholder
1129	„ Zahural	Watganj	14B, Watganj Street	do	Broker.
1130(S)	Hyder Kamruddin	Beliaghata	1, Kaiser Street	do	Honorary Magistrate.
	I				
1131	Iyenger, A P I	Garden Reach	42, Garden Reach Road	Indian	Head Clerk, Kesoram Cotton Mill, Garden Reach.
	J				
1132	Jana, Anath Bandhu	Hasnabad	Mahamudpur	Hindu	Landholder.
1133	„ Satish Chandra	Falta	Belsingh	do	Head Master, Mathura M E School.
1134	„ Priya Nath, BA	Hasnabad	Bishpur	do	President Panchayet.
	K				
1135	Kabiratna, Debabrata	Baranagore	Kamarhati	Hindu	Head Pandit, Kamarhati H E School.
1136	Kaviraj, Gour Das	Dum-Dum	Dum-Dum	do	Teacher, Dum-Dum H E School.
1137	Kabyatirtha, Narayan Chandra	Mathurapur	Mathurapur	do	Landholder.

Serial No.	Name.	Thana.	Place of abode—Village, road or street.	Nationality.	Quality or occupation.
	K				
1138	Kanjilal, Dhruba Pada	Baliaghata	Loco Office, Narkeldanga	Hindu	Head Clerk, E B Railway.
1139(S)	„ Probodh Chandra, MA	Cossipore	28, Rattan Babu Road	do	Head Master, Victoria H E School.
1140	Kapasi, Gosta Behari	Baduria	Jadurati	do	Merchant.
1141	Kapat, Makhon Lal	Falta	Fatehpur	do	Landholder.
1142	Kar, Akshay Kumar	Tollygunge	52, Russa Road, South	do	Proprietor of a press and house. owner.
1143	„ Haridas	Khardah	Bilkanda	do	Assistant Head Master, Mitra Institution, Calcutta.
1144	„ Narain Das	Dum-Dum	Nagerbazar	do	Landholder.
1145	„ Satish Chandra	Cossipore	84-2, Cossipore Road	do	ditto.
1146	Koyal, Sris Chandra	Mathurapur	Mathurapur	do	ditto.
1147	„ Kalikumar	Canning	Tengrakhali	do	Zamindar and landholder.
1148	„ Upendra Nath	ditto	ditto	do	ditto.
1149	Khan Khabir Ahmed	Barrackpore	Sadarbazar	Muhammadan	Mechanic.
1150	„ Abdul Majed	Saugore	Mandirtala, P O Mandirtala	do	Zamindar.
1151	„ Abdus Sattar	Sarupnagar	Hakimpur, P O Bethari	do	ditto.
1152	„ Wajed Ali	Baruipur	Sherpur	do	Landlord.
1153	„ Mozaffar Hossain	Budge-Budge	D N Ghosh Road, Nundanpore	do	Contractor.

1154	„	Sekender	.. Saugore ..	.. Bamankhali, P O Moriganga	..	do ..	.. Landholder.
1155		Khara, Upendra Nath	.. Metiabruz ..	.. Nadial, Badartola ..	..	Hindu ..	.. Employee, Clive Jute Mill.
1156		Kasyapi, Jahar Lal	.. Alipur ..	.. Dhopapara, Bartala ..	..	do ..	.. Zamindar and money-lender.
1157		Mahbubar	.. Baduria ..	.. Aturia	..	Muhammadan	.. Landholder.
1158 (S)		Kazi M Anwarul Huq	.. Baraset ..	.. Kazipara	..	do ..	.. P W D Office, Bengal Secretariat.
1159	„	Asraf Jaman	.. Deganga ..	.. Bhaslia, P O Deganga..	..	do ..	.. Landholder.
1160	„	Golam Arab	.. Naihati ..	.. Bara Budhria ..	..	do ..	.. Zamindar and money-lender.
1161	„	Neamat Ali	.. Tollygunge ..	.. Mosar	..	do ..	.. Independent gentleman.
1162 (S)	„	Nurul Huda	.. Titagarh ..	.. Anderson Road ..	..	do ..	.. Marriage Registrar.
1163	„	Maulvi Mohd. Khairul Anam.	Beliaghata ..	.. 1, Kaiser Street ..	..	do ..	.. Head Maulvi, Hare School.
1164	„	Shamsuddoha	.. Beniapukur ..	.. 67, Beniapukur Road ..	..	do ..	.. Zamindar.
1165 (S)	„	M Md Abdul Kader	.. Baraset ..	.. Kazipara	..	do ..	.. Employee in the office of the Controller of Currency, India, Calcutta.
1166 (S)	„	Syed Golam Mohiuddin	Alipore ..	.. 6, Mohes Chandra Dutt Lane	..	do ..	.. Head Assistant, Political Pensions Office.
1167 (S)		Khan, Gul Muhammad	.. Beniapukur ..	.. 11, Tiljala Road ..	..	do ..	.. Merchant and Zamindar.
1168	„	Ram Chandra	.. Baruipur ..	.. Baruipur	..	Hindu ..	.. Landholder.
1169	„	Serajul Islam	.. Beliaghata ..	.. 36A, Sastitala Road ..	..	Muhammadan	.. Lighting Inspector, Calcutta Corporation.
1170	„	Azizul Nabi	.. Watgunge ..	.. 6, Ekbalpur Gully ..	..	do ..	.. Landlord.

Serial No.	Name.	Thana.	Place of abode—Village, road or street.	Nationality.	Quality or occupation.
	K				
1171	Khandker, Ahamed Ali	Sarupnagar	Chitore	Muhammadan	Landlord, Member, Union Board.
1172	Khara Kanta	Basirhat	Harishpore	Hindu	Landholder.
1173	Koley, Panna Lal, MSC	Cossipore	Uttarpara Lane	do	Independent gentleman.
1174 (S)	Kuar, Satish Chandra, BA	Bhowanipur	18, Iswar Ganguly Lane	do	Zamindar.
1175	Kundu, Jogendra Nath	Manicktala	23, Ultadingi Road	do	Aratdar.
1176	,, Bistupada	Entally	5, South Road	do	Timber merchant.
	L				
1177	Laskar, Aminuddin	Bistupur	Amgachia	Muhammadan	Naib.
1178	,, Ram Gopal	Tollygunge	Russa	Hindu	Landholder.
1179	,, Sashi Bhushan	Kakdwip	Beharinagar, Lot No 2, P O Kakdwip	do	ditto.
1180	,, Sri Krishna Das	Behala	Sarsuna	do	Landholder and merchant.
1181	Law, Sailendra Nath, MA	Baranagore	Victoria H E School, Baranagore	do	2nd Master.
	M				
1182(S)	Maitra, Girish Chandra	Basirhat	Mirzapur	Hindu	Landholder.
1183	,, Hrishikesh	Barrackpore	Sadarbazar	do	Teacher, Debi Prasad High School.
1184(S)	,, Kanti Chandra	Basirhat	Mirzapur	do	Landholder.

1185	„	Keshab Chandra	..	Hasnabad	..	.. Bhowanipore	..	do	.. Superintendent, Sir Ramesh Ch Mitter Estate.
1186	„	Mati Lal ..	..	Baranagar	..	.. Bon-Hooghly	..	do	.. Landholder.
1187(S)	Mitra,	Probodh Chandra	..	Cossipur	..	.. 22, Gopal Chatterjee Road	..	do	.. ditto.
1188	„	Ram Chandra	..	Kulpi	..	.. Kasipore, P O Karanjali	..	do	.. School Master.
1189(S)	Mitter,	P C, Dr.	..	Beliaghatta	..	.. 22-A, Garpar Road	..	do	.. Professor, University College of Science.
1190	Maity,	Hore Krishna	..	Kakdwip	..	.. Gobindpur	..	do	.. Landholder.
1191	„	Nikunja ..	..	Saugore	..	.. Mandirtala, P O Mandirtala	..	do	.. ditto.
1192	„	Surendra Nath	..	Kulpi	..	.. Nischintapore	..	do	.. ditto.
1193	Mal,	Bipin Bihari ..	..	Tollygunge	..	.. Kosba, P O Dhakuria	..	do	.. ditto.
1194	Mallik,	Bijoy Krishna	..	Jagatdal	..	.. Kawgachi	..	do	.. Cloth Merchant.
1195	„	Dhirendra Nath	..	Falta	..	.. Shamsundarpur	..	do	.. Landholder.
1196	„	Nibaran Chandra	..	Bhowanipore	..	.. 13, Balaram Bose 2nd Lane	..	do	.. Contractor.
1197	„	Jadu Nath	..	ditto	..	.. 27-2 Harish Chatterjee Street	..	do	.. Merchant.
1198	„	Nil Ratan	..	Habra	..	. Dogachia, P O Biraballavpara	..	do	.. Assistant, Messrs Newman & Co.
1199(S)	„	Panchu Gopal	..	Bijpore	..	.. Kanchrapara	..	do	.. Head Master, Harnet H E School.
1200	„	Panchu Gopal	..	Bhowanipore	..	.. 1, Balaram Bose 2nd Lane	..	do	.. Record-keeper, Inspector-General of Prisons' Office.
1201	„	Samser ..	..	Diamond Harbour	..	.. Haridevpur, P O Sarisa	..	Muhammadan	.. Landholder.
1202	„	Upendra Nath Havildar		Baraset	..	.. Baraset	..	Hindu ..	.. Assistant, Baraset Government School.

Serial No.	Name.	Thana.	Place of abode—Village, road or street.	Nationality.	Quality or occupation.
	M				
1203	Mandal, Aghore	Canning	Kumarkhali	Hindu	Landholder.
1204	,, Alahi Box	Hasnabad	Sadarpur	Muhammadan	Zamindar's gomasta.
1205	,, Alimuddin	Tollygunge	114-B, Lake Road	do	Landholder.
1206	,, Rajaulla	Sarupnagar	Balti	do	Landholder and President, Panchayat.
1207	,, Akhoy Kumar	Deganga	Deolia, P O Hadipur	Hindu	Landholder.
1208	,, Ashutosh	Budge-Budge	Bawali	do	President Panchayat of Union No. 1.
1209	,, Bamandas	Baranagore	Victoria H E School	do	6th Master.
1210	,, Bholanath	Tollygunge	99, Tollygunge Road	do	Zamindar, Merchant.
1211	,, Bhupesh Chandra	Falta	Keotkhanda	do	Landholder.
1212	,, Bibhuti Bhusan	Kulpi	Ramkrishnapur	do	Headmaster, Ramkrishnapur M E School.
1213	,, Hamijuddin	Sarupnagar	Uttarkachdai, P O Khatura	Muhammadan	Landholder.
1214	,, Bihari Lal	Baduria	Baduria Bazar	Hindu	Merchant—dealer in jute, sugar, etc.
1215(S)	,, Bistu Charan	Behala	Becharam Chatterjee Road, Behala P O.	do	Second Master, Behala H E School.
1216	,, Bijoy Krishna	Budge-Budge	Bawali	do	Zamindar.
1217	,, Banku Bihari	Maniktala	13, Moti Mitra Lane	do	Jute-broker.
1218	,, Debendra Nath	Sonarpur	Ranabhutia, P O Sonarpur	do	Landholder.

1219	,,	Fakir Chand	..	Habra	..	..	Keotsah, Tababeria P O	..	do	..	..	ditto.
1220	,,	Forhan	..	Cossipore	..	..	66, South Sinthee Road	..	Muhammadan	..	..	Contractor and Landholder.
1221	,,	Haris Chandra	..	Baruipur	..	..	Madarat ..	..	Hindu	..	..	Pension holder and Landholder.
1222	,,	Jaharali	..	Hasnabad	..	..	Dholetukri ..	..	Muhammadan		..	Landlord and stamp vendor.
1223	,,	Jatindra Nath	..	Budge-Budge	..	..	Bawali . ..	..	Hindu	..	..	Zamindar.
1224	,,	Jatindra Nath	..	Deganga	..	..	Kalsur, P O Kalsur ..	..	do	..	..	Landholder.
1225	,,	Jugal Charan	..	Tollygunge	..	..	55, Tollygunge Road ..	..	do	..	..	Zamindar.
1226	,,	Kamal Krishna	..	Watgunge	..	..	8, Ram Kamal Mukherjee's Street	..	do	..	..	ditto.
1227	,,	Keshab Chandra	..	Protapnagar	..	..	Raipur ..	..	do	..	..	Landholder.
1228	,,	Kumud Bandhu	..	Saugor Island	..	..	Parulia, P O Diamond Harbour	..	do	..	..	ditto.
1229	,,	Kumud Krishna	..	Budge-Budge	..	..	Bawali ..	..	do	..	..	Zamindar.
1230	,,	Lalit Mohan	..	Magrahat	..	..	Lakhikantapur, P O Magrahat	..	do	..	..	School Master.
1231	,,	Lalit Mohan, BA	..	Bhangore	..	..	Raghunathpur ..	..	do	..	..	Teacher, Bhangore School.
1232	,,	Madhab	..	Canning	..	..	Godakhali, P O Gochhapa	..	do	..	..	Landholder and Merchant.
1233	,,	Mahendra	..	Saugore	..	..	Moriganga, Moriganga P O	..	do	..	..	Landholder.
1234	,,	Moni Mohan	..	Budge-Budge	..	..	Pesli, P O Burul ..	..	do	..	..	Head Master, Budge-Budge Manual Free Primary School.
1235	,,	Munshi Abdul Bari	..	Habra	..	..	Kadambagachi ..	..	Muhammadan		..	Teacher, Rajibpur A V School.
1226	,,	Manmatha Nath	..	Diamond Harbour		..	Parulia, P O Diamond Harbour	..	Hindu	..	..	Zamindar.

Serial No.	Name.	Thana.	Place of abode—Village, road or street.	Nationality.	Quality or occupation.
	M				
1237	Mandal, Munshi Kalimuddin	Baraset ..	.. Ramkristopur ..	Muhammadan ..	.. Landholder.
1238	,, Nilanjan ..	Behala ..	.. Thakurpukur Mission, P O Barisa	Christian	.. School Master of St. Barnabus H E School, Kidderpore, No. 1, Dent Mission Road.
1239	,, Prabaso Chandra, BA	Budge-Budge ..	.. Bawali	Hindu ..	.. Zamindar.
1240	,, Prankrishna ..	Bistupur ..	.. Chak Rasulmamud	Christian	.. Retired Missionary of Baptist Mission and Landholder.
1241	,, Pulin Behari ..	Diamond Harbour	.. Bardrone	Hindu ..	.. Assistant Teacher, Diamond Harbour H E School.
1242	,, Purna Sashi ..	Alipore ..	.. 62, Alipore Road	do ..	.. Merchant.
1243	,, Rabindra Nath, BA ..	Budge-Budge ..	.. Bawali	do ..	.. Zamindar
1244	,, Radhika Prasad ..	ditto ..	.. Kachbagan, P O Bawali ..	do ..	.. ditto.
1245	,, Rajabali	Amdanga ..	.. Sadhanpur, P O Rajibpur ..	Muhammadan	.. Landholder.
1246	,, Rajanikanta ..	Kulpi ..	.. Sidheswarpur, P O Kulpi ..	Hindu ..	.. Inspecting Pandit of Kulpi.
1247	,, Rajendra Nath ..	Bhowanipore ..	.. 91-B, Kalighat Road, P O Kalighat	do ..	.. Landholder, President and Service-holder. (Accountant, District Engineer's Office, district 24-Parganas.)
1248	,, Rakhal Krishna ..	Baruipore ..	.. Kotalpur, P O Baruipur ..	do ..	.. Zamindar.
1249(S)	,, Rash Bihari ..	Deganga ..	.. Kalsoor, P O Kalsoor	do ..	.. Landholder and Honorary Magistrate, Baraset.
1250	,, Sachindra Nath ..	Hasnabad ..	.. Barabank-Sahebkhali, P O Hingulganj.	do ..	.. Landholder.
1251	,, Satis Chandra ..	Baruipur ..	.. Kotalpur	do ..	.. Landholder and President.

1252	,,	Satis Chandra, BA	Kulpi	..	Gabberia H E School, P O Ghatiswara.	do	Assistant Teacher, Gabberia H E School.
1253	,,	Sasibhusan	Deganga	..	Kalsur	do	Landholder.
1254	,,	Sobhan Box	Mograhat	..	Ramchandrapur, P O Rangilabad	Muhammadan	ditto.
1255	,,	Surendra Nath	Deganga	..	Mirzapur	Hindu	ditto.
1256	,,	Tarapada	Dum-Dum	..	1, Bagjala Road	do	Jute Merchant.
1257	,,	Upendra Krishna, BA	Budge-Budge	..	Kalipur, P O Achipur	do	Teacher, Kalipur H E School.
1258	Manna,	Bishnupado	Magrahat	..	Multi	do	Landholder.
1259	,,	Prafulla Chandra	Budge-Budge	..	South Bawali	do	Landholder (under-graduate).
1260	Marik,	Prosad Das	Baruipur	..	Baruipur	do	Clerk, Chief Engineer's Office, 3, Koilaghat Street, Calcutta.
1261	,,	Ganendra Nath, BA	Magrahat	..	Multi	do	Clerk, Coaching Office, E B Railway.
1262	Maschatak,	Birendra Nath	Baraset	..	Kotra, P O Baraset	do	Landholder.
1263(S)	,,	Dhirendra Nath	ditto	..	ditto	do	President, Kotra U. B.
1264	Matilal,	Sudhin Chandra	Behala	..	Barisa	do	Assistant, Health Department, Calcutta Corporation.
1265	Maulvi	Abdul Nazab	Baduria	..	Nagarpur, P O Punra	Muhammadan	Head Maulvi, Nagarpur Junior Madrasah.
1266	,,	Ahad Baksh Golder	Haroa	..	Kusangra	do	Landholder.
1267(S)	,,	A F M Abdur Rahaman	Basirhat	..	Basirhat	do	Zamindar and Honorary Magistrate.
1268	,,	Abdur Rashid	Protapnagar	..	Chakberia, P O Protapnagar	do	Government Pensioner.
1269(S)	,,	A T M Moazzum	Basirhat	..	Basirhat	do	Honorary Magistrate.

Serial No.	Name.	Thana.	Place of abode—Village, road or street.	Nationality.	Quality or occupation.
	M				
1270(S)	Maulvi Bazlar Rahman, BA ..	Hasnabad ..	.. Kolutola, P O Hasnabad ..	Muhammadan ..	Landholder.
1271	,, Bazlar Rahman ..	Basirhat ..	.. Basirhat	do ..	.. Head Maulvi, Basirhat Junior Madrasah.
1272	,, Enamul Haq ..	Muchipara ..	.. 32, Upper Circular Road ..	do ..	.. Hide Merchant and Landholder.
1273(S)	,, Syed Mokarram Ali, BA, BT	Basirhat ..	.. Basirhat	do ..	.. S. I. of Schools, Diamond Harbour.
1274	,, Karimar Rahman ..	ditto ..	.. Nehalpur, P O Dhanyakuria ..	do ..	.. Landlord.
1275	,, Syed Korban Ali ..	ditto ..	.. Basirhat	do ..	.. Head Master, Basirhat Junior Madrasha.
1276(S)	,, Saiyid Mukhshed Ali Malique, MLC.	ditto ..	.. Talpukur	do ..	.. Landholder and Municipal Commissioner.
1277	,, Sakhawatullah Mondal	ditto ..	.. Banasjhari, P O Dandirhat ..	do ..	.. President, Sankchura U. B.
1278	Mir Munshi Abdur Rahoman ..	Barrackpore ..	.. Sadar Bazar, Kunjramahal ..	do ..	.. Regimental Munshi.
1279	Moni Din Taron	Joynagar ..	.. Monipore Banstola	Hindu ..	.. Head Master of Monipore Banstola M E School.
1280	Moula Gazi Golam ..	ditto ..	.. Alipore	Muhammadan ..	.. Landholder.
1281	Munshi Abdur Rahman ..	Naihati ..	.. Jan Muhammad Road ..	do ..	.. Municipal Commissioner.
1282	,, Golam Mukhtader ..	Basirhat ..	.. Mukonda Kati	do ..	.. Landholder.
1283	,, Tofazzal Hossen ..	Habra ..	.. Dakhin Sarai, P O Prithiba ..	do ..	.. ditto.
1284	,, Rostam Ali Ahmed ..	ditto ..	.. Suria, P O Rajibpore	do ..	.. ditto.
1285	,, Serajuddin ..	Entally ..	.. 13, Ismail Street	do ..	.. Businessman

1286	„	Derajtoolla Molla ..	Falta ..	.. Jafferpore ..	.. do ..	.. Landholder.
1287(S)	Mazumdar,	Bijoy Chandra ..	Tollygunge ..	.. 35-2, Hindusthan Plot ..	.. Hindu ..	.. Bengali novel-writer and author.
1288	„	Charu Chandra ..	Bhowanipore ..	.. 82, Haris Chatterjee Street ..	.. do ..	.. Merchant.
1289(S)	„	Harendra Kumar	Hashnabad ..	.. Taki ..	.. do ..	.. Head Master, Taki Government H E School.
1290(S)	„	Hari Das ..	Rajarhat ..	.. Narayanpore ..	.. do ..	.. Manager, Matilal Seal's Estate.
1291(S)	„	Hari Pada ..	Behala ..	.. Naskharpore, Behala ..	.. do ..	.. Clerk, Commercial Traffic Manager's Office, B N Railway, Kidderpore.
1292	„	Jitendra Nath ..	Barrackpore ..	.. Government Park ..	.. do ..	.. P W D S D O
1293	„	Kashi Pati ..	Naihati ..	.. Garifa ..	.. do ..	.. Clerk, Loco Office, E B Ry.
1294	„	Kishori Mohan ..	Beliaghata ..	.. 68, Garpar Road ..	.. do ..	.. Pensioner.
1295	„	Lolit Mohan *alias* Narendra Nath	Bhangar ..	.. Sastengachi, P O Rajarhat-Bistupur ; at present 27, Nikashipara Road, Calcutta.	do ..	.. Landholder.
1296(S)	„	Mriganka Kumar	Chitpur ..	.. 7, Kali Kumar Banerjee Lane ..	do ..	.. Merchant.
1297(S)	„	Nagendra Nath, BA	ditto ..	.. 18, Barrackpore Trunk Road, P O Cossipore.	do ..	.. Head Master, Raja Manindra Memorial H E School, Paikpara.
1298	„	Nagendra Nath ..	Ballygunge ..	.. 38-2, Beltolla Road ..	.. do ..	.. Head Master, Government H E School, Ballygunge.
1299	„	Surendra Nath ..	Basirhat ..	.. Basirhat Town ..	.. do ..	.. Zamindar.
1300(S)	„	Sudhanshu Bhushan	Sandeshkhali ..	.. Gosova ..	.. do ..	.. Manager, Gosova Estate.
1301	„	Sudhir Kumar, MA	Budge-Budge ..	.. Kalipur, P O Alipur ..	.. do ..	.. Assistant Head Master, Kalipur H E School.
1302(S)	„	Upendra Nath BA	Dum Dum ..	.. Kadihati, Dum Dum ..	.. do ..	.. Head Master, Kadihati School.
1303	Mia,	Mina	Bhowanipore ..	.. 96, Ashutosh Mukherjee Road ..	.. do ..	.. Merchant.

Serial No.	Name.	Thana.	Place of abode—Village, road or street.	Nationality.	Quality or occupation.
	M				
1304	Mistri, Khodabux	Budge-Budge	Raghunathpur, Aghipur	Muhammadan	Clerk, Albion Jute Mill, Budge-Budge.
1305	,, Ditto	Barrackpore	Sadar Bazar	do	Landholder.
1306	Mir Easin Chaudhury	Beliaghata	145, Narkeldanga Main Road	do	Contractor.
1307	Mir Furrock Hossain	Sonarpur	Bon-Hooghly	do	Landholder.
1308	Mirde, Arjun	Kakdwip	Madhab Nagar, Lot No. 9, P O Kakdwip.	Hindu	ditto.
1309(S)	Mirza Ansar Ali	Jorabagan	2, Gurudas Datta Garden Lane	Muhammadan	Port Trust Railway, Rathtala, Calcutta.
1310	Misra, Surja Kanta	Baduria	Dakshin Chatra	Hindu	Landholder.
1311	Mitra, Akshay Kali	Basirhat	Basirhat	do	School Master, Bhabla H E School.
1312	,, Ambica Charan	Budge-Budge	Telari or 30, Dover Road, Ballygunge.	do	Clerk, Coal Department of Andrew Yule & Co.
1313	,, Ambika Charan	Diamond Harbour	Netra	do	Landholder.
1314	,, Anath Bandhu	Budge-Budge	Sarengabad, P O Mahestala	do	Head Clerk, Budge-Budge Jute Mill.
1315(S)	,, Annada Prosad	Dum Dum	Dum Dum Cantonment	do	Assistant, Orr Dignam & Co.
1316(S)	,, Ashutosh, BA	Bijpore	Sarkarpara, Halisahar	do	Head Master, Halisahar H E School.
1317	,, Atul Bihari	Manicktala	3, Moti Mitra Lane	do	Clerk.
1318	,, Banamali	ditto	2, Moti Mitra Lane	do	Landholder.
1319	,, Bankim Chandra	Baruipur	Baruipur	do	diito.

1320	„	Bankim Chandra	..	Budge-Budge	..	..	Mowkhali	.. do	.. Teacher, Mayapur M E School.
1321(S)	„	Bhola Nath	..	Manicktala	..	..	132, Bagmari Road ..	.. do	.. Cashier.
1322	„	Bhola Nath	..	Tollygunj C P	..	..	P. 402, Russa Road ..	.. do	.. Electric Engineer, Calcutta Electric Supply & Co.
1323	„	Birendra Nath	..	Naihati	..	..	Naihati	.. do	.. Clerk, Lakshmi Industrial Bank, 80, Chowringhee Road, Calcutta.
1324	„	Fakir Chandra	..	Beliaghata	..	..	66, Charakdanga Road..	.. do	.. Merchant.
1325	„	Famndra Nath	..	Jaynagar	..	..	Majilpore	.. do	.. Teacher of J M Training School.
1326	„	Ganesh Chandra	..	Habra	..	..	Gaipur, P O Gobardanga	.. do	.. Clerk, Graham & Co, Calcutta.
1327	„	Girija Nath	..	Titagarh	..	..	Talpukur	.. do	.. Store-keeper, Empire Jute Mill.
1328	„	Girindra Nath	..	Bhowanipore	..	..	7, Benoy Basu Lane ..	.. do	.. Merchant and Bookmaker.
1329	„	Harendra Krishna	..	Jaynagar	..	..	Dakhin Barasat ..	.. do	.. Pensioner.
1330(S)	„	Harendra Nath	..	Basirhat	..	..	Pipa	.. do	.. Landholder.
1331	„	Haridas ..	..	Beliaghata	..	..	66, Charakdanga Road..	.. do	.. Merchant.
1332	„	Horace D ..	..	Ballygunge	..	..	1, Chakraberia Lane	.. Christian	.. Member, Managing Staff of Messrs Forbes, Forbes, Campbell & Co, Ld.
1333	„	Horendra Kali	..	Harowa	..	..	Gopalpore	.. Hindu	.. Landholder.
1334	„	Hrishikesh	..	Jaynagar	..	..	Mitrapara, Jaynagar ..	.. do	.. Zamindar.
1335(S)	„	J C, Esq ..	..	Ballygunge	..	..	14, Kankulia Road ..	.. do	.. Professor, Vidyasagar College.
1336	„	Jatindra Krishna	..	Bhowanipore	..	..	14, Paddapukur Road	.. do	.. Clerk, Fire Brigade.

Serial No.	Name.	Thana.	Place of abode—Village, road or street.	Nationality.	Quality or occupation.
	M				
1337	Mitra, Jatindra Nath	Diamond Harbour	Kuleswar, P O Usthi	Hindu	Landholder.
1338	,, Jatindra Nath	Bhowanipore	69, Haris Chatterjee Street	do	Teacher, Mitra Institution.
1339	,, Jatindra Nath	Kulpi	Katabenia	do	Landholder.
1340 (S)	,, Janendra Nath	Jaynagar	Jaynagar	do	ditto.
1341	,, Jogendra Nath	Bhangar	Kantatola	do	Naib of Zamindary Katchari.
1342	,, Khetra Lal	Beliaghata	149, Raja Rajendra Lal Mitter Road.	do	Clerk.
1343	,, Mr. K N	Entally	75C, Sambhu Babu Lane	do	Overseer, Calcutta Corporation.
1344	,, Khetra Das	Beliaghata	7, Rakhal Ghose Lane	do	Teacher.
1345 (S)	,, Mohim Chandra	Diamond Harbour	Bardrone, P O Hatugunge	do	School Master.
1346	,, Monindra Nath	Bhowanipore	114/1, Hazra Road	do	Clerk, Merchant office.
1347	,, Madan Mohan	Bhowanipore	75G, Paddapukur Road	do	Clerk, Brunner Mond & Co.
1348	,, Narendra Kali	Harowa	Gopalpore	do	Landholder.
1349	,, Nilratan	Bistupur	Bar Kalikapur, P O Bawali	do	ditto.
1350	,, Nani Lal	Magrahat	Benipur, P O Magrahat	do	Service-holder.
1351	,, Panch Kowri	Tittagarh	Tittagarh Municipality	do	Sanitary Inspector.
1352 (S)	,, Panch Kowri	Naihati	Naihati	do	Honorary Magistrate.

1353	,,	Phani Bhusan	..	Rajarhat	..	..	Bistupur, P O Rajarhat-Bistupur	..	do	..	.. Clerk, Bombay Co Ld, Calcutta.
1354	,,	Phanindra Nath	..	Jaynagar	..	..	Majilpore	..	do	..	.. Teacher, J M Training School.
1355	,,	Profulla Chandra	..	Bhowanipore	..	..	1, Lansdowne Road ..	..	do	..	.. Zamindar.
1356	,,	Prafulla Kumar	..	Cossipore	..	..	22, Gopal Chandra Chatterjee Road		do	..	.. Landlord.
1357	,,	Provosh Chandra	..	Khardah	..	..	Panihati, Agarpara, P O Kamarhati		do	..	.. ....
1358 (S)	,,	Provat Kumar, BSC	..	Beliaghata	..	..	11, Narkel Bagan Lane ..		do	..	.. Landholder.
1359	,,	Provas Chandra	..	Bhowanipore	..	..	26, Ganga Prosad Mukherjee Road		do	..	.. Surveyor, Calcutta Improvement Trust.
1360 (S)	,,	Pulin Bihari, BSC	..	Alipore	..	..	15, Pitambar Ghatak Lane ..		do	..	.. Chemist.
1361	,,	Rajani Kanta	..	Bijpore	..	..	Halisahar	..	do	..	.. Clerk, Superintending Engineer's Office, Treasury Buildings, Calcutta.
1362	,,	Ramendra Prasad	..	Bhowanipore	..	..	22, Rup Narain Nundan Lane ..		do	..	.. Contractor.
1363	,,	Santosh Krishna	..	Chitpur	..	..	1, Haridhan Dutta Lane ..		do	..	.. Moneylender.
1364(S)	,,	S C, MA	..	Dum Dum	..	..	4, The Mall, Dum Dum ..	..	do	..	.. Professor. Ripon College, Calcutta.
1365	,,	Sarat Chandra	..	Beliaghata	..	..	9, Garpar Road ..	..	do	..	.. Clerk.
1366	,,	Sat Couri	..	ditto	..	..	65, Talpukur Road ..	..	do	..	.. Licensed Inspector, Calcutta Corporation.
1367	,,	Satyendra Nath	..	ditto	..	..	57-A, Garpar Road ..	..	do	..	.. Landholder.
1368	,,	Satish Chandra	..	Bhowanipore	..	..	9, Paddapukur Road ..	..	do	..	.. Money- lender.
1369	,,	Satish Chandra	..	Sonarpur	..	..	Harinabhi	..	do	..	.. Clerk, Calcutta Corporation.

Serial No.	Name.	Thana.	Place of abode—Village, road or street.	Nationality.	Quality or occupation.
	M				
1370	Mitra, Srish Chandra	Bhowanipore	62-1, Paddapukur Road	Hindu	Contractor.
1371	„ Srish Chandra	Haroa	Uchildaha	do	Naib, Uchildaha Kutchery.
1372	„ Sudhanshu Sekhar	Canning	Canning Town	do	Assistant Agent, Port Canning & Co.
1373	„ Surendra Nath	Alipore	11, Mohesh Dutt Lane	do	Clerk, Birkmyre Brothers.
1374(S)	„ Surendra Nath	Jaynagar	Jaynagar	do	Landholder and Municipal Commissioner.
1375	„ Sukumar	Bhowanipore	98, Bacoolbagan Road	do	Landlord.
1376	„ Surendra Nath	Chitpur	11 & 12, Barrackpore Trunk Road	do	Supervisor, Calcutta Corporation.
1377	„ Surendra Nath	Bistupur	Sukdebpur	do	School Master Sukdebpur Board School.
1378	Modak, Diva Das	Khardah	Sodepur	do	Merchant.
1379	„ Santosh Chandra	ditto	ditto	do	ditto.
1380	Molla, Abdul Goffur	Mathurapur	Khari, P O Kasinagar	Muhammadan	Landholder and Contractor
1381	„ Alahi Box	Hashnabad	Rajapur	do	Landholder.
1382	„ Basir Ali	Diamond Harbour	Mollapukur	do	ditto.
1383	„ Daulat	Bhangar	Shatuli	do	ditto.
1384	„ Dedar Box	Mahestala	Chukmira	do	Tailoring business.
1385	„ Didar Bukhsh	Bistupur	Gilabaria	do	Landholder.

1386	„	Fakir Muhammad	..	Magrahat	..	..	Nainan	..	..	..	do	..	..	Tailoring business.
1387	„	Hefazuddi	..	Moheshtola	..	..	Jaita, P. O. Moheshtola			..	do	..	..	ditto.
1388(S)	„	Hossain ..	..	Metiabruz	..	..	Bartola	..	..	..	do	..	..	Contractor, Whiteaway, Laidlaw & Co.
1389	„	Kader Box	..	Manestala	..	..	Chukmira	..	..	..	do	..	..	Tailoring business.
1390	„	Lutfar Rahman	..	ditto	..	..	Magura P. O. Moheshtola			..	do	..	..	ditto.
1391	„	Muhammad Ayub	..	ditto	..	..	Magura	..	..	..	do	..	..	....
1392	„	Muzzafar Hossain	..	ditto	..	..	Santoshpur	..	..	..	do	..	..	Tailoring business.
1393	„	Rahim Baksh	..	Sandeshkhali	..	..	Sankdah	..	..	..	do	..	..	Landholder.
1394	„	Sobhan ..	..	Diamond Harbour		..	Mollapukur, P O Diamond Harbour				do	..	..	ditto.
1395	„	Md Sultan	..	Hashnabad	...	..	Harikati	..	...	..	do	..	..	ditto and school master.
1396	„	Samir Ali ..	..	Mahestala	..	..	Chukmira	..	..	..	do	..	..	Tailoring business.
1397	„	Abdul Sattar	..	Budge-Budge	..	..	Raipur, P O Achipore	..	..	..	do	..	..	Merchant.
1398	„	Daserali ..	..	Canning	..	..	Ramchandra Khali	..	..	..	do	..	..	Landholder and Merchant.
1399	„	Didarbux ..	..	Bistupur	..	..	Gilaberia	..	..	..	do	..	..	Landholder.
1400	„	Khorshed Ali	..	Canning	..	..	Ramchandra Khali	..	..	..	do	..	..	Landholder and Merchant.
1401	„	Mainuddi ..	..	Hashnabad	..	..	Kharampore	..	..	..	do	..	..	Landholder.
1402	„	Sahadat Ali	..	Bhangore	..	..	Maricha	..	..	..	do	..	..	Teacher, Bhangore H E School.
1403	„	Subedali ..	..	Mahestala	..	..	Chhota Mahestala	..	..	..	do	..	..	Trader and Landholder.

Serial No.	Name.	Thana.	Place of abode—Village, road or street.	Nationality.	Quality or occupation
	M				
1404	Moulic, Probhat Chandra ..	Deganga ..	.. Chourashi	Hindu ..	.. Landholder and President Panchayat.
1405	Maulvi Abureza ..	Alipore ..	.. 15, Chetla Hat Road	Muhammadan ..	.. Clerk, Bengal Secretariat.
1406(S)	„ Abdul Haïez, MA ..	Ballygunge ..	.. 38-1, Beltala Road	do ..	.. Head Moulvi, Government H E School, Ballygunge.
1407	„ Ahamad Ali ..	Watgunge ..	.. 86, Garden Reach Road ..	do ..	.. Merchant.
1408(S)	„ Ershad Hossain, BA ..	Basirhat ..	.. Basirhat	do ..	.. Head Master, M L Jubilee Institution, Calcutta.
1409(S)	„ Fazly Ahmad	Bhowanipore ..	.. 62, Sankaripara Road	do ..	.. Government pensioner.
1410	„ Golam Muhammad ..	Titagarh ..	.. Sayedabad	do ..	.. Clerk, Office of the Record-Keeper, High Court.
1411	„ Shaikh Abdus Samad	Sarupnagar ..	.. Chitpur, P S Keuragachi ..	do ...	.. Landholder.
1412	„ Serajul Islam ..	Alipore ..	.. Central Jail Press, Alipore ..	do ..	.. Correspondence Clerk.
1413	„ Mozaffar Ahmed ..	Hasnabad ..	.. Taki	do ..	.. Maulvi, Taki Government School.
1414(S)	„ Muhammad Khairul Bashar, BA	Alipore, Bhowanipore	.. 10-A, Gopal Nagar Road, 5, Kundu Road.	do ..	.. Offg. Head Master, N M H E School.
1415	„ Matiar Rahman ..	Protapnagar ..	.. Chakberia, P O Protapnagar ..	do ..	.. Zamindar, Naib Kazi of Baruipore Muhammadan Marriage Registry Office.
1416(S)	„ Muhammad Musa ..	Basirhat ..	.. Nehalpur, P. O. Dhanyakuria ..	do ..	.. Vice-President, Dhanyakuria U B.
1417	„ Mahammad Sherajul Haq.	Diamond Harbour	.. Diamond Harbour	do ..	.. Teacher, Diamond Harbour School.
1418(S)	„ Mahammad Sufi ..	Maniktala ..	.. 20, Kalimuddin Lane ..	do ..	.. Teacher, Calcutta Madrasah.
1419	„ Mahior Rohman ..	Pratapnagar ..	.. Chackbaria	do ...	.. Landholder Naïb Kazi of Baruipur Muhammadan Marriage Registry Office.

1420	„	Muhammad Ishaque,	Baduria	..	..	Palta, P O Punra	..	..	do	..	.. President, Bajitpur U B.
1421	„	Mahammad Mostem	Titagarh	..	..	Titagarh	..	..	do	..	.. Landholder.
1422	„	Nayan Ali Mondol	.. Sarupnagar	..	..	Syed Kati, P O Sonapole	..	..	do	..	.. ditto.
1423	„	Nur Ahmad	.. Protapnagar	..	..	Chakberia, P O Protapnagar	..	..	do	..	.. Deputy Superintendent, R. Section, Appellate Side, High Court.
1424	Muhammad	Abid Hossain	.. Cossipore	..	..	23-1, Jheel Road	..	..	do	..	.. Retired Railway Employee.
1425	„	Abdul Aziz Chaudhary.	Deganga	..	..	Jhikra, P O Prithiba	..	..	do	..	.. Landholder and Arathdar.
1426	„	Abdul Gani	.. Magrahat	..	..	Keseli, P O Usti	..	..	do	..	.. Landholder.
1427	„	Ali Reza	.. Bhangore	..	..	Bhagabanpore	..	..	do	..	.. ditto.
1428	„	Azizar Rahman	Deganga	..	..	Pathorghatta	..	..	do	..	.. ditto.
1429 (S)	„	Azizuddin	.. Magrahat	..	..	Salgaria	..	..	do	..	.. Head Clerk, Calcutta Madrasah, Wellesley Square.
1430	„	Azizul Bari	.. Beliaghata	..	..	16-25, Beliaghata Main Road	..	..	do	..	.. Draftsman, B-N Ry Office.
1431	„	Esmile	.. Watgunge	..	..	31, Dent Mission Road	..	..	do	..	.. Landlord.
1432	„	Belat Ali	.. Metiabruz	..	..	Hazi Ratan Lane, P O Bartola	..	..	do	..	.. Clerk, Audit Office, B-N Ry, Kidderpore.
1433	„	Dost	.. Entally	..	..	23, Middle Road	..	..	do	..	.. Landholder.
1434	„	Eusuf Ali	.. Amdanga	..	..	Rampur, P O Arkhali, Amdanga	..	..	do	..	.. President, Panchayat and Landholder.
1435 (S)	„	Noor, BA	. Beliaghata	..	..	3, Gas Street	..	..	do	..	.. Ward Surveyor, Calcutta Corporation.
1436 (S)	„	Idris	.. ditto	..	..	23, Beliaghata Main Road	..	..	do	..	.. Clerk, D T S Office, Sealdah.

Serial No.	Name.	Thana.	Place of abode—Village, road or street.	Nationality.	Quality or occupation.
	M				
1437	Muhammad Jamal ..	Tollygunge B P ..	.. Haltu, P O Dakhuria ..	Muhammadan ..	.. Landholder.
1438	,, Samsuzzaha ..	Baliaghata ..	.. 10, Kalimuddin Sarkar Lane ..	do ..	.. Landlord.
1439	,, Siddique ..	Bhowanipore ..	.. 22, Ashutosh Mukherjee Road ..	do ..	.. Merchant.
1440 (S)	,, Hassem ..	Baliaghata ..	.. 19, Beliaghata Main Road ..	do ..	.. Merchant and M L C.
1441	,, Israil Khan ..	Baduria ..	.. Labanga	do ..	.. Landholder.
1442	,, Yusah Khan ..	Beliaghata ..	.. 38, Raja Dinendra Street ..	do ..	.. Hide Merchant.
1443	,, Isaque ..	Baraset ..	.. Kazipara	do ..	.. Clerk, Ishapore Rifle Factory.
1444	,, Jan Bokhsh ..	Metiabruz ..	.. Panchpara Road, P O Bartola ..	do ..	.. School Master, Matiabruz H E School.
1445	,, Kasemali ..	Magrahat ..	.. Saligaria	do ..	.. Landholder.
1446	,, Jahur ..	Manicktala ..	.. 7, Harish Neogi Road ..	.. do ..	.. Teacher.
1447	,, Matiar Rohman	Habra ..	.. Kankpul ..	.. do ..	.. Landholder and President, U B.
1448 (S)	,, Yakub (Khan Saheb).	Barrackpore ..	.. Sadar Bazar, 6, Aligole ..	.. do ..	.. Late Superintendent, High Commissioner's Office, Bagdad, and Assistant Superintendent, Zoological Garden, Alipore.
1449	,, Yoonus ..	Ballygunge ..	.. 16-1, Earl Street ..	.. do ..	.. Merchant.
1450 (S)	,, Yusuff ..	Garden Reach ..	.. 155, Paharpur Road ..	.. do ..	.. Clerk.
1451	,, Yiub Molla ..	Maheshtala ..	.. Magura	.. do ..	.. Rice Merchant.

1452 (S)	Maulvi	Makbul Ali, BA	Baduria	Arsula, P O Baduria	do	Account Department, Section 3 in Calcutta Corporation.
1453	„	Mubarak Ali Mandal	Habra	Goalbati, P O Tababeria	do	Gantidar, President, Panchayat and Member, Local Board.
1454 (S)	„	Mulluk Hossain, BA, BT	Hashnabad	Taki	do	Teacher, Taki Government School.
1455	„	Abdul Hamid	Manicktala	14, Simla Road	do	Landholder.
1456	„	Muhammad Abdul Bari Mondal	Baduria	Hooghly, P O Tentulia	do	ditto.
1457	„	Muhammad Latif Sardar	Baduria	Khorgachi, P O Punra	do	ditto.
1458	„	Mahbubar Rahman	Bashirhat	Mukundakati, P O Itenda	do	Zamindar.
1459	„	Murtaza	Baraset	Kazipara, Sitapara	do	Clerk, High Court, Calcutta.
1460	Mukharji,	Ajit Kumar	Tollygunge	36/4, Gariahat Road	Hindu	Clerk, Messrs Williamson Magor & Co., 4 Mangoe Lane, Calcutta.
1461	„	Amrita Lal	Khardah	Panihati	do	Contractor.
1462	„	Amrita Lal	ditto	Khardah	do	Government pensioner and Honorary Magistrate.
1463(S)	„	Amar Nath	Behala	Brahmo Samaj Road	do	Superintendent in the office of the Controller of Military Accounts, P and A District, 6, Esplanade East, Calcutta.
1464	„	Amrita Lal	Tollygunge	15-2, Sree Mohan Lane	do	Landholder.
1465(S)	„	Amulya Chandra	Khardah	Titagarh	do	Head Clerk, Titagarh Jute Factory No. 2.
1466(S)	„	Amulya Charan	Behala	Muradpore	do	Landholder.
1467	„	Amulya Dhan	Maheshtala	Raipur, P O Maheshtala	do	Clerk, Mackinnon, Mackenzie & Co, Clive Street.
1468	„	Amulya Dhan	Baraset	Jagulia, P O Chota Jagulia	do	School Master, Chota Jagulia H E School.

Serial No.		Name.	Thana.	Place of abode—Village, road or street.	Nationality.	Quality or occupation.
		M				
1469	Mukharji,	Ananga Mohan ..	Chitpur ..	.. Barrackpore Trunk Road ..	Hindu ..	.. Superintendent, Paikpara Raj Estate.
1470(S)	,,	Anil Nath ..	Entally ..	.. 15, Canal Street	do ..	.. Zamindar.
1471	,,	Arabinda ..	Naihati ..	.. Naihati	do ..	.. Clerk, Shaw, Wallace & Co.
1472(S)	,,	Ashutosh, BA ...	Baraset ..	.. Baraset	do ..	.. Law Student.
1473	,,	Ashutosh ..	Joynagore ..	.. Joynagore, P O Joynagore ..	do ..	.. Pension holder.
1474	,,	Atul Krishna ..	Manicktala ..	.. 129, Maniktola Road	do ..	.. Landholder.
1475	,,	Banku Bihari ..	Bhowanipore ..	.. 9-2, Bala Ram Bose Ghat Road ..	do ..	.. Clerk, Currency Office.
1476	,,	Barendra Lal, MA	ditto ..	.. 42-1, Mohim Haldar Street ..	do ..	.. Retired Head Master of H E School.
1477	,,	Basanta Kumar ..	Khardah ..	.. Panihati	do ..	.. Assessor in Calcutta Corporation.
1478	,,	Bato Kristo ..	Watgunj ...	.. 21, Michael Dutt Street ..	do ..	.. Clerk, Port Commissioners.
1479	,,	Bijoy Krishna ..	Habra ..	.. Dighra / 28, Radha Madhab Saha Lane, Chorebagan. ..	do ..	.. Assistant, Andrew Yule & Co.
1480(S)	,,	Bikash Chandra ..	Baraset ..	.. Baraset	do ..	.. Service-holder, Tramways, Calcutta.
1481	,,	Bhut Nath ..	Behala ..	.. Sarsuna	do ..	.. Overseer, Budge-Budge Municipality.
1482	,,	Bhut Nath ..	Magrahat ..	.. Dhemua, P O Multi ..	do ..	.. Service-holder.
1483	,,	Bijoy Gopal ..	Bistupur ..	.. Joyrampur ..	do ..	.. Gomostha.

1484	,,	Binoy Krishna ..	Sonerpur ..	..	Boral	..	do ..	..	Stenographer in the office of the Divisional Superintendent, broad gauge, E B Ry.
1485	,,	Binod Bihari ..	Cossipore ..	..	94, South Sinthi Road	..	do ..	..	Contractor and Landholder.
1486	,,	Binode Bihari ..	Naihati ..	..	Garifa	..	do ..	..	Sarishtadar, Judge's Court, Howrah.
1487	,,	Brajendra Nath, MA, BT.	Ballyganj ..	..	38-2, Beltolla Road ..	..	do ..	..	Teacher.
1488	,,	Atul Chandra ..	Tollygunge ..	..	23-2-1, Tollygunge Road	..	do ..	..	Clerk, Mercantile Office.
1489	,,	Atul Krishna ..	Alipore ..	..	52, Myerpore Road ..	..	do ..	..	Clerk.
1490	,,	Binoy Bhusan ..	Naihati ..	..	Kantalpara ..	..	do ..	..	Landholder and Contractor.
1491	,,	Birendra Nath ..	Baraset ..	..	Santoshpur, P O Duttapukur	..	do ..	..	Landholder.
1492	,,	Chandi Charan ..	Jagatdal ..	..	Bhatpara ..	..	do ..	..	Clerk, Port Commissioners' Office, Calcutta.
1493	,,	Charu Chandra	Maheshtala ..	..	Krishnagar ..	..	do ..	..	Clerk, 43 Garden Reach Workshop.
1494	,,	Chintaharan ..	ditto ..	..	ditto	..	do ..	..	Landholder and Banker.
1495	,,	Chuni Lal ..	ditto ..	..	Ganipur, P O Maheshtala	..	do ..	..	Landholder.
1496	,,	Dhirendra Nath ..	ditto ..	..	ditto	..	do ..	..	Clerk, Duncan Brothers & Co, Calcutta.
1497	,,	Dhirendra Nath ..	Bhowanipore ..	..	3/1, Priya Nath Mallik Road	..	do ..	..	Landholder & businessman.
1498	,,	Dhirendra Nath ..	Haroa ..	..	Khalisadi	..	do ..	..	Secretary, Shalipore M E School.
1499	,,	Dhiraj Chandra ..	Bijpore ..	..	Kanchrapara ..	..	do ..	..	Teacher.
1500	,,	Dindayal ..	Baraset ..	..	Baraset	..	do ..	..	Book-keeper, Harman & Co, Calcutta.

Serial No.	Name.	Thana.	Place of abode—Village, road or street.	Nationality.	Quality or occupation.
	M				
1501	Mukharji, Fani Bhusan ..	Bhowanipore ..	.. 56, Bakulbagan Road ..	.. Hindu ..	.. Clerk, Merchant Office.
1502	,, Fanindra Nath, DSC	Chitpore ..	.. 4, Simlaipara Lane ..	.. do ..	.. Clerk, Calcutta Police Office.
1503(S)	,, Girindra Nath ..	Bhowanipore ..	.. 25, Haldarpara Road ..	.. do ..	.. Zamindar.
1504	,, Girindra Nath ..	Cossipore ..	.. 78, Cossipore Road ..	.. do ..	.. Landholder.
1505(S)	,, Girindra Nath ..	Beliaghata ..	.. 78 & 79, Charakdanga Road	.. do ..	.. Coal Merchant.
1506	,, Girindra Nath ..	Alipore ..	.. 1, Bakulbagan Road ..	.. do ..	.. Retired Head Clerk.
1507(S)	,, Gobinda Chandra ..	Bhowanipore ..	.. 56, Kalighat Road ..	.. do ..	.. Engineer, Calcutta Corporation.
1508	,, Gosta Behari ..	Entally ..	.. 16, Annada Palit Road	.. do ..	.. Secretary, Entally Academy.
1509	,, Haro Kumar ..	Beliaghata ..	.. 73, Talpukur Road ..	.. do ..	.. Clerk.
1510	,, Harendra Nath ...	Watgunge ..	.. 41, Watgunge Street ..	... do ...	... Zamindar.
1511	,, Hari Das ..	Dum-Dum ..	.. Nimta	.. do ..	.. Landholder.
1512	,, Hari Gopal ..	Jaynagar ..	.. Futigoda	.. do ..	.. Pension holder.
1513	,, Haripada ..	Manicktala ..	.. 3-10, Gouribari Lane ..	.. do ..	.. Contractor.
1514	,, Haripada ..	Magrahat ..	.. Multi	.. do ..	.. Landholder.
1515	,, Haripada, BA ..	Baranagar ..	.. Victoria H E School, Baranagar	.. do ..	.. Teacher.
1516	Haripada ..	Sonarpore ..	.. Boral	.. do ..	.. Retired Government servant.

1517	„	Harsha Nath	..	Tollygunge	..	..	P No. 177, Lake Road	..	do	..	.. Contractor.
1518	„	Hemanta Kumar	..	Titagarh	..	..	Talpukur	..	do	..	.. Landholder.
1519	„	Hiranmay	..	Khardah	..	..	Khardah	..	do	..	.. Clerk, Accountant-General, Bengal's Office.
1520	„	Joshit Kumar	..	Maheshtala	..	..	Maheshtala ..	..	do	..	.. Clerk, General Family Pension Fund, Old Court House Street Calcutta.
1521	„	Janaki Nath	..	Baruipur	..	..	South Garia ..	..	do	..	.. Auditor, Accountant-General, Bengal's Office, Calcutta.
1522	„	Jatindra Nath	..	ditto	..	..	Khardah, Kulinpara ..	..	do	..	.. Independent gentleman.
1523(S)	„	Jatindra Nath	..	Basirhat	..	..	Bhabla	..	do	..	.. Retired Sub-Registrar.
1524	„	Jitendra Nath	..	Maheshtala	..	..	Ganipur, P O Maheshtala	..	do	..	.. Clerk, Engine Meiffre & Co, Radhabazar, Calcutta.
1525	„	Jnanendra Nath	..	Basirhat	..	..	Basirhat	..	do	..	.. Landholder.
1526	„	Jogendra Nath		Behala	..	..	Barisa	..	do	..	.. Clerk, Accountant-General, Bengal's Office
1527	„	Jyotish Chandra	..	Khardah	..	..	Khardah	..	do	..	.. Rector, Metropolitan Institution, Barabazar.
1528	„	Jyotish Chandra	..	Dum-Dum	..	..	Dum-Dum Cantonment	..	do	..	.. Clerk, Inspection Section, Gun and Shell Factory, Cossipore.
1529	„	Jogendra Nath	..	Magrahat	..	..	Dhemua	..	do	..	.. Clerk.
1530	„	Kalipada	..	Bhowanipore	..	..	38, Mohim Halder Street	..	do	..	.. Clerk, Merchant Office.
1531	„	Kedar Nath	..	Baranagar	..	..	Baranagar, Sastitola ..	..	do	..	.. Landholder.
1532	„	Kedar Nath	..	Khardah	..	..	Agorepara ..	..	do	..	.. Retired Government servant
1533	„	Kenaram	..	Baraset	..	..	Ardibhag, P O Baraset	..	do	..	.. Landholder.
1534	„	Khetra Nath	..	ditto	..	..	Sasan village and P O	..	do	..	.. President, Panchayat.

Serial No.	Name.	Thana.	Place of abode—Village, road or street.	Nationality.	Quality or occupation.
	M				
1535(S)	Mukharji, Khitiprasanna BA	Habra ..	.. Gobardanga ..	.. Hindu ..	.. Zamindar.
1536	„ Kirtibhushan, BSC	Khardah ..	.. Rahrah	.. do ..	.. Clerk, Government Stationery Office.
1537(S)	„ Kishori Mohan ..	Behala ..	.. Gabtala	.. do ..	.. Government pensioner and working as an Accountant and Cashier in the Calcutta Club, No. 241, Lower Circular Road, Calcutta.
1538	„ Kamini Kumar ..	Maheshtala ..	.. Ganipur ..	.. do ..	.. Clerk.
1539	„ Krishna Mohan .	Bhowanipore ..	.. 50, Haldarpara Road ..	.. do ..	.. Clerk.
1540(S)	„ Kristo Chandra ..	ditto ..	.. 269, Kalighat Road ..	.. do ..	.. 2nd Clerk, Survey Department, Calcutta Corporation.
1541(S)	„ Krishna Dhan ..	Mahestala ..	.. Gangipur, P O Mahestala	.. do ..	.. Landholder and pensioner.
1542	„ Kunja Behari ..	Basirhat ..	.. Basirhat	.. do ..	.. Head Pandit, Guru Training School, Basirhat.
1543	„ Lalit Mohan ..	Maheshtala ..	.. Raypur ..	.. do ..	.. Clerk, Bengal Chamber of Commerce.
1544	„ Mani Mohan ..	Basirhat ..	.. Panitor	.. do ..	.. President, Panchayat
1545(S)	„ Manmathanath ..	Maniktala ..	.. 173, Raja Dinendra Street	.. do ..	.. Engineer and Contractor.
1546	„ Manuj Mohan, MA, BT	Ballygunj ..	.. 38-2, Beltola Road ..	.. do ..	.. Teacher
1547	„ Misri Lal ..	Maheshtala ..	.. Ganipur, P O Maheshtala	.. do ..	.. Clerk, Planters' Stores and Agency Co, Ld, Calcutta.
1548	„ Murarimohan ..	Behala ..	.. Diamond Harbour Road	.. do ..	.. Assistant to the Registrar of the Calcutta University, Senate House.
1549	„ Nalinikanta	Baraset ..	.. Baraset	.. do ..	.. Landholder and Contractor

1550(S)	„	Rai Bahadur Nani Lal	Ballygunge	..	..	No. 1, Love Lock Street	..	do	..	..	Manager, Jail Depot.
1551	„	Nanda Lal ..	Bhowanipore	..	..	13, Ketoakhoti Lane	..	do	..	..	Head Clerk, Government Telegraph Stores.
1552	„	Nani Gopal ..	Titagarh	..	..	Talpukur	..	do	..	..	Landholder.
1553	„	Nagendra Nath	Barrackpore	..	..	Monirampore	..	do	..	..	Residential Inspector, Ripon College, Calcutta.
1554	„	Narendra Nath ..	Bhowanipore	..	..	35, Kalighat Road	..	do	..	..	Clerk in a Government Office.
1555	„	Nani Gopal ..	Sonarpur	..	..	Boral ..	..	do	..	..	Employee, Bengal Chamber of Commerce.
1556(S)	„	Nirode Chandra, BA	Naihati	..	..	Kantalpara	..	do	..	..	School Master, Bhatpara School.
1557	„	Nirode Krishna ..	Beliaghata	..	..	4, Talpukur Road	..	do	..	..	Head Assistant, Shaw, Wallace & Co.
1558	„	Nripendra Nath ..	Khardah	..	..	Khardah ..	..	do	..	..	Landholder.
1559	„	Panchanan ..	Habra	..	..	Gobardanga	..	do	..	..	Jute Broker and Municipal Commissioner.
1560	„	Panna Lal ..	Maheshtala	..	..	Ganipur, P O Maheshtala	..	do	..	..	Clerk, M T, Ltd, Chowringhee Road, Calcutta.
1561	„	Peari Mohan ..	Chitpur	..	..	4, Madhushudan Chatterjee Lane	..	do	..	..	Merchant.
1562	„	Prabodh Chandra ..	Tollygunge	..	..	Baisabnalghata	..	do	..	..	Store Clerk, Traffic Manager's Office, E B Railway.
1563	„	Prafulla Chandra	ditto	..	..	7, Monoharpukur Road	..	do	..	..	Coal Merchant.
1564	„	Prafulla Kumar ..	Habra	..	..	Gobardanga	..	do	..	..	Assistant Accountant, Martin & Co.
1565	„	Prafulla Kumar ..	Haroa	..	..	Kulgachi Kachari	..	do	..	..	Naib, Sur Babu's Estate, Kulga.
1566	„	Phani Bhusan ..	Basirhat	..	..	P O Itinda	..	do	..	..	Head Master, Itinda M E School.

Serial No.	Name.	Thana.	Place of abode—Village, road or street.	Nationality.	Quality or occupation.
	M				
1567	Mukharji Phani Bhusan ..	Behala ..	.. Panchanantola, Behala ..	Hindu ..	.. School Master, Behala M E School.
1568	,, Prokash Chandra	Baruipore ..	.. Madarat	do ..	.. Landholder, and President Panchayat of Union VI.
1569(S)	,, Prio Nath ..	Khardah ..	.. Khardah	do ..	.. Government Pensioner and Honorary Magistrate.
1570	,, Pronabdev ..	Baruipur ..	.. 8, Gopal Mukharji Lane, Shanagore Road.	do ..	.. Retired Police Officer, and Trader.
1571(S)	,, Purna Chandra, BL	Bhowanipore ..	.. 28, Mohim Halder Street ..	do ..	.. Working as Manager in Zamindary Estate.
1572	,, Purna Chandra, BA	Baranagar ..	.. Victoria H E School, Baranagar ..	do ..	.. Assistant Head Master.
1573	,, Radhika Prasad	Sonarpur ..	.. Boral	do ..	.. Landholder.
1574	,, Raj Kumar ..	Beliaghata ..	.. 7, Canal East Bye-lane ..	do ..	.. Landholder and Merchant.
1575	,, Ram Chandra ..	Baranagar ..	.. Belgharia	do ..	.. Landholder, Honorary Magistrate.
1576	,, Ram Krishna ..	Chitpur ..	.. 11, Simlaipara Lane	do ..	.. Landholder
1577	,, Rash Bihari ..	Baraset ..	.. Gustia, P O Badu	do ..	.. ditto.
1578	,, Sachida Nanda ..	Bhowanipur ..	.. 8/A, Russa Road	do ..	.. Businessman
1579	,, Sarat Chandra ..	Entally ..	.. 77, Deb Lane	do ..	.. Clerk.
1580	,, Sarat Chandra ..	ditto ..	.. 77C, Deb Lane	do ..	.. Landholder.
1581	,, Sushil Chandra, BA	Chitpore ..	.. 4, Simlaipara Bye-lane.. ..	do ..	.. Clerk, E B Ry, Koilaghat.
1582	,, Sushil Krishna ..	Watgunge ..	.. 10-2, Michael Dutt Street ..	do ..	.. Honorary Magistrate, Alipore.

1583	„	Sasanka Bhusan	..	Bhowanipore	..	..	152, Russa Road	..	..	do	..	..	Clerk, Attorney Office, 3, Hastings Street.
1584	„	Sashi Bhusan	..	Behala	..	..	Bonomali Nasker Road	..	..	do	..	..	Cashier, Messrs Barry & Co 2, Fairlie Place Calcutta.
1585	„	Satish Chandra	..	Beliaghata	..	..	110, Narkeldanga Main Road	..	..	do	..	..	Landholder.
1586	„	Sachi Prasanna	..	Habra	..	..	Village and P O Gobardanga	..	..	do	..	..	Zamindar.
1587	„	Sati Prasanna	..	ditto	..	..	Village and P O Gobardanga	..	..	do	..	..	ditto
1588	„	Satyendra Nath	..	Mathurapur	..	..	Satghora, P O Mathurapur	..	..	do	..	..	Landholder.
1589	„	Satyendra Nath	..	Khardah	..	..	Kulinpara	..	..	do	..	..	Merchant.
1590	„	Shib Chandra	..	Naihati	..	..	Naihati	..	..	do	..	..	Clerk, District Board Office, Hooghly.
1591	„	Sital Chandra	..	Maheshtala	..	..	Krishnagar	..	..	do	..	..	Landholder.
1592	„	Shib Das	..	Baranagar	..	..	Victoria Road, Baranagar	..	..	do	..	..	Contractor.
1593	„	Subodh Kumar	..	Khardah	..	..	Ghoshpara, Panihati	..	..	do	..	..	Clerk, Chief Auditor's Office, E B Ry, Store Section, Sealdah.
1594	„	Sudhir Krishna	..	Dum-Dum	..	..	Kadihati 8, Rajkumar Lane, Beadon Street, Calcutta.			do	..	..	Landholder.
1595	„	Sukumar	..	Maheshtala	..	..	Maheshtala	..	..	do	..	..	Clerk, Bird & Co.
1596	„	Surendra Nath	..	Baranagar	..	..	Areadaha	..	..	do	..	..	Clerk, Imperial Bank of India, Calcutta.
1597	„	Surendra Nath	..	Tollygunge	..	..	7, Srimohan Lane	..	..	do	..	..	Contractor.
1598	„	Surendra Nath	..	Behala	..	..	Bonomali Nasker Road, Gabtola, Behala, P O.			do	..	..	Head Clerk, Store Department, Garden Work, Messrs Mackneill & Co, Fairlie Place, Calcutta.

Serial No.		Name.	Thana.	Place of abode—Village, road or street.	Nationality.	Quality or occupation.
		M				
1599(S)	Mukharji	Surendra Nath, BA	Baruipur ..	.. Baruipur ..	.. Hindu ..	.. Head Master, Baruipur H E School.
1600(S)	,,	Titu Lal ..	Baranagar ..	.. Joy Narain Banerji Lane	.. do ..	.. Landholder
1601(S)	,,	Upendra Lal ..	Bhowanipore ..	.. 8, Rup Narayan Nandan Lane	.. do ..	.. Engineering Supervisior, District No 1, Calcutta Corporation.
1602	,,	Upendranath ..	Beliaghata ..	.. 46-1, Canal East Road	.. do ..	.. Mill-owner.
1603	Munshi	Abdul Basid ..	Ballygunge ..	.. 16, Beck Bagan Lane ..	.. Muhammadan	.. Landholder.
1604	,,	Abdul Rasid ..	Maheshtala ..	.. Santoshpore ..	.. do ..	.. Clerk.
1605	,,	Abdul Jabbar ..	Dum-Dum ..	.. Dum-Dum Cantonment	.. do ..	.. Service-holder
1606	,,	Abdul Aziz Mandal ..	ditto ..	.. Kuchlia, P O Gobardanga	.. do ..	.. Landholder.
1607	,,	Abdul Razzaque ..	Cossipore ..	.. 96-35, Cossipore Road ..	.. do ..	.. Employee, Gun and Shell Factory, Cossipore.
1608	,,	Abdus Shakoor ..	Ballygunge ..	.. 12B, Aheripukur Road..	.. do ..	.. Assistant, Calcutta Improvement Trust.
1609	,,	Abdur Rashid ..	ditto ..	.. 25, Old Ballygunge Road	.. do ..	.. Contractor and Landholder.
1610	,,	Amdad Hossain ..	Habra ..	.. Joygachi, P O Tababeria	.. do ..	.. School Master.
1611	,,	Amir Ali . ..	Ekbalpur ..	.. 28, Ekbalpur Lane ..	.. do ..	.. Zamindar.
1612(S)	Maulvi	Bazlar Rahaman ..	Bhowanipore ..	.. 8-1, Sankaripara Road	.. do ..	.. ditto.
1613	Munshi	Elahi Bux ..	Basirhat ..	.. Mathurapore ..	.. do ..	.. President.
1614	,,	Golam Mawla Khardah	ditto ..	.. Aharampore ..	.. do ..	.. Landholder.

1615	,,	Golam Sarwar	..	Rajarhat	..	..	Ghuni, Rajarhat, P O Bistupur	..	do	..	..	President Panchayat and Land holder.
1616	,,	Derastulla Ahmed	..	Basirhat	..	..	Basirhat	..	do	..	..	Landholder
1617	,,	Golam Mahiuddin	..	Basirhat	..	..	Khordobaha	..	do	..	..	ditto.
1618	,,	Md. Ibrahim	..	Noapara	..	..	Nawabganj	..	do	..	..	Clerk, Rifle Factory.
1619	,,	Isa Kha	..	Chitpur	..	..	8-3, Mandalpara Lane, P O Chitpur		do	..	..	Building Contractor.
1620	,,	Khabiruddin		Khardah	..	..	Panihati	..	do	..	..	Merchant.
1621	,,	Khairuddin	..	ditto	..	..	Agarpara	..	do	..	..	Independent gentleman.
1622	,,	Kharshed Hossain	..	Maheshtala	..	..	Jalkura	..	do	..	..	Landholder.
1623	,,	Lal Muhammad	..	Baraset	..	..	Falta, P O Sasan	..	do	..	..	President Panchayat.
1624	,,	Mahammad Hussain		Ekbalpur	..	..	5-1, Mominpur Road	..	do	..	..	Zamindar.
1625	,,	Mahammad Purkair		Mathurapur	..	..	Sankarpur	..	do	..	..	Landholder and President Panchayat of Union No. II
1626	,,	Muhammad Mogul Jan		Chitpur	..	..	Railway quarters, Cossipore Road		do	..	..	Assistant Goods Supervisor, Chitpur
1627	,,	Muhammad Mogul Jan		Rajarhat	..	..	Baligore	..	do	..	..	Teacher, Bhagabanpur, M E School
1628	,,	Mazharul Haq	..	Ballygunge	..	..	12, Baluhakak Lane	..	do	..	..	Landholder.
1629	,,	Mohini Mohan	..	Cossipore	..	..	37-2, Cossipore Road	..	Hindu	..	..	Pension-holder from Zamindari Estate.
1630	,,	Md. Mobarek Ali	..	Habra	..	..	Nokepul, P O Baraballavpara	..	Muhammadan		..	School Master.
1631	,,	Nur Muhammad Naskar		Magrahat	..	..	Magrahat	..	do	..	..	Landholder.
1632	,,	Mokteor Ali Naskar	..	ditto	..	..	ditto	..	do	..	..	ditto.

Serial No.	Name.	Thana.	Place of abode—Village, road or street.	Nationality.	Quality or occupation.
	M				
1633	Munshi Moheb Ahmed ..	.. Deganga ..	.. Sathatia, P O Deganga ..	Muhammadan ..	.. Tradesman.
1634	,, Ramjanali Mondal ..	Swarupnagar ..	.. Banglani, Molongapara ..	do ..	.. Landholder.
1635	,, Sahib Ahmed ..	Deganga ..	.. Sathatia, P O Deganga ..	do ..	.. Tradesman.
1636	,, Sirajul Islam Khan ..	Beliaghata ..	.. 36A, Sastitola Road	do ..	.. License Inspector, Calcutta Corporation.
1637	,, Solaman	Noapara ..	.. Nawabganj	do ..	.. Draftsman, Rifle Factory Office.
1638	,, Tasaddak Hossein ..	Ballygunge ..	.. 10, Bright Street	do ..	.. Landholder.
1639	Mencon, N. A. ..	... Bhowanipore ..	.. 16-B Ashutosh Mukherji Road ..	do (Madrasi) ..	.. Accountant, Merchant Office.
	N				
1640	Nag, Haripada ..	.. Beliaghata ..	.. 31A, Garpar Road	Hindu ..	.. Landholder.
1641	,, Kristodas ..	.. Khardah ..	.. Sukchar	do ..	.. Clerk, E B Ry, Sealdah, Chief Auditor's Office, Traffic Audit Branch, M Section.
1642(S)	,, Rakhal Chandra ..	Naihati ..	.. Kantalpara	do ..	.. Head Master, Naihati H E School.
1643	,, Surendra Kumar ..	Bijpore ..	.. E B Ry Colony,, Bijpore ..	do ..	.. Assistant Master, E B Ry Technical Institute, Kanchrapara.
1644(S)	Nandi, Atul Krishna, BL ..	Beliaghata ..	.. 99-A, Garpar Road (Residence) 99-C, ditto (School address).	do ..	.. Rector, Atheneum Institution.
1645	,, Bipin Behari ..	Barackpore ..	.. Sadar Bazar	do ..	.. Merchant.
1646	,, C C MA, BT ..	Ballyganj ..	.. 38-2, Beltala Road	do ...	.. Teacher.
1647	,, Jiban Krishna ..	Beliaghata ..	.. 57C, Talpukur Road	do ..	.. Clerk.

1648	Naskar, Abdul Bari	.. Joynagore ..	.. Killey Durganagore ..	.. Muhammadan	.. Landholder.
1649	,, Abdus Sobhan	.. Diamond Harbour	.. Patra, P O Diamond Harbour	... do ..	... Naib, Shovabazar Raj Estate.
1650	,, Rahisuddin	.. Sonarpur ..	.. Boral ..	.. do ..	.. Landholder.
1651	,, Akshay Kumar	.. Maheshtala ..	.. Chandernagore ..	.. Hindu ..	.. Clerk.
1652	,, Annada	... do ..	.. Ashuti ..	.. do ..	.. Trader and Landholder.
1653	,, Bhupendra Nath	.. Magrahat ..	.. Kedipukur, P O Magrahat	.. do ..	.. Landholder.
1654	,, Anumati	.. Maheshtala ..	.. Mahadebnagar ..	.. do ..	.. Contractor.
1655	,, Golam Rasul	.. Deganga ..	.. Parulia, P O Deganga ..	.. Muhammadan	.. Landholder.
1656	,, Habibar Rahman	.. Magrahat ..	.. Belaria ..	.. do ..	.. Landholder and School Master.
1657(S)	,, Hem Chandra	.. Beliaghata ..	.. 72, Beliaghata Main Road	.. Hindu ..	.. Zamindar, Honorary Magistrate and Councillor, Calcutta Corporation
1658	,, Jogendra Kumar	.. do ..	.. 73, ditto	.. do ..	.. Zamindar.
1659	,, Rajendra Nath	.. Rajarhat ..	.. Mahisbathan, P O Rajarhat-Bistupur.	do ..	.. Landholder.
1660	,, Sarat Chandra	.. Maheshtala ..	.. Jagannathnagar ..	.. do ..	.. ditto.
1661	,, Sarat Chandra	.. Beliaghata ..	.. 72, Beliaghata Main Road	.. do ..	.. Zamindar.
1662	,, Surendra Nath	.. Maheshtala ..	.. Chandernagore ..	.. do ..	.. School Master.
1663	Nath, Jadu Gopal	.. Mathurapur ..	.. Barashi ..	.. do ..	.. Teacher, Kashinagore M E School.
1664	,, Harigopal ..	.. Basirhat ..	.. Basirhat ..	.. do ..	.. Merchant.
1665	Neaz Ahmad ..	.. Baraset ..	.. Kajipara, Sitipara ..	.. Muhammadan	.. Land-owner.

Serial No.	Name.	Thana.	Place of abode—Village, road or street.	Nationality.	Quality or occupation.
	N				
1666	Neogi, Anil Chandra ..	Manicktala ..	.. 56, Ultadingi Main Road ..	Hindu ..	.. Retired, M A
1667	,, Bankim Chandra ..	Khardah ..	.. Betulia, Bandipur	do ..	.. Clerk, Messrs Bird & Co
1668	,, Hari Pada ..	Cossipore ..	.. 16, Gopal Chandra Chatterji Road	do ..	.. Government Pensioner.
1669(S)	,, Kali Krishna ..	Metiabruz ..	.. Mudiali	do ..	.. Assistant Auditor, Garden Reach Workshop
1670	,, Narendra Nath ..	Manicktala ..	.. 56, Ultadanga Main Road ..	do ..	.. Landholder
1671(S)	Neya, Sushil Chandra, BA, BL	Mathurapur ..	.. Mathurapur	do ..	.. Head Master.
1672	Nayak, Chandi Charan, BA, BL	Budge-Budge ..	.. Budge-Budge	do ..	.. Head Master, P K H E School.
	P				
1673	Pahar, Khirode Chandra ..	Habra ..	.. Keotshah, P O Tababeria ..	do ..	.. Landholder.
1674	Paik, Dulal Chandra ..	Beniapukur ..	.. 53, Beniapukur Lane	do ..	.. Contractor.
1675(S)	Pain, Nilmoni ..	Maniktala ..	.. 13, Simla Road	Bengali Christian ..	.. Trader in lace.
1676(S)	,, Tincowri Lal ..	Alipore ..	.. 6, Mayerpore Lane	Hindu ..	.. Head Clerk, The Asbestos and Belting Company.
1677(S)	Pal, Abinash Chandra ..	Metiabruz ..	.. Mudiali, P O Garden Reach ..	do ..	.. Assistant Auditor, B-N Railway, Audit Department.
1678(S)	,, Amal Chandra, Rai Sahib	Barrackpore ..	Government Park, Barrackpore ..	do ..	.. Park Superintendent and Honorary Magistrate, Barrackpore
1679(S)	,, Ashutosh, MA ..	Tollygunge ..	.. Kasba	do ..	.. Professor.
1680	,, Ashutosh	Joynagore ..	.. Joynagore, Telipara	do ..	.. Clerk, Calcutta University.

1681	„	Baidyanath ..	..	Beliaghata ..	..	14, Talpukur Road ..	..	do ..	..	Clerk.
1682	„	Behari Lal, BSc	..	Metiabruz ..	..	Fatehpur ..	..	do ..	..	Clerk, Calcutta Corporation, Accounts Department
1683	„	Behari Lal ..	..	Cossipore ..	..	46, Barrackpore Trunk Road ..		do ..	..	Government Pensioner.
1684	„	Bijoy Chandra	..	Magrahat ..	..	Multi, P O Multi ..	..	do ..	..	Service-holder.
1685	„	Chandra Sekhar	..	Tollygunge ..	..	Brahmapur, P O Boral ..		do ..	..	Landholder.
1686(S)	„	Dhruba Nath	..	Manicktala ..	..	53, Badridas Temple Street ..		do ..	..	Manager of a Rice Mill.
1687	„	Hari Das, BA ..	..	Nawpara ..	..	Nawabganj ..	..	do ..	..	Head Master, Nawabganj H E School.
1688	„	Hari Nath ..	..	Protapnagar ..	..	Jaforepore ..	..	do ..	..	Auditor, Controller-General's Office, Calcutta.
1689(S)	„	Jitendra Nath	..	Entally ..	..	4, Shambhu Babu Lane ..		do ..	..	Landholder.
1690	„	Jogendra Nath	..	Habra ..	..	Mena, P O Tababeria ..	..	do ..	..	ditto.
1691	„	Kailash Chandra	..	Metiabruz ..	..	Mudiali ..	..	do ..	..	ditto.
1692	„	Khagendra Nath	..	Watgunge ..	..	9, Romanath Pal Road ..		do ..	..	ditto.
1693	„	Kiran Chandra	..	Entally ..	..	14, Sambhu Babu Lane ..		do ..	..	Clerk.
1694	„	Krishna Lal ..	..	Cossipore ..	..	46, Barrackpore Trunk Road ..		do ..	..	Shop-keeper
1695	„	Madan Mohan	..	Naihati ..	..	Sastri Road ..	..	do ..	..	Coal Merchant.
1696	„	Mahendra Nath	..	Bistupur ..	..	Deulia ..	..	do ..	..	Retired Clerk.
1697	„	Man Mohan ..	..	Titagarh ..	..	Titagarh ..	..	do ..	..	2nd Clerk, Titagarh Paper Mill.
1698(S)	„	Nagendra Nath, MA*	..	Basirhat ..	..	Basirhat ..	..	do ..	..	Head Master, Basirhat H E School.

Serial No.	Name.	Thana.	Place of abode—Village, road or street.	Nationality.	Quality or occupation.
	P				
1699	Pal, Nemai Charan ..	Kulpi ..	.. Malikpore ..	.. Hindu ..	.. President Panchayat.
1700	,, Paresh Chandra ..	Watgunge ..	.. 9, Romanath Pal Road ..	do ..	.. Landlord.
1701	,, Praphulla Kumar ..	Bijpore ..	.. Bijpore ..	.. do ..	.. Landholder and Merchant.
1702	,, Prosad Chandra (No II) ..	Baruipur ..	.. Baruipur ..	.. do ..	.. Clerk, D T S Office, E B R, Calcutta District.
1703(S)	,, Provat Chandra ..	Garden Reach, Calcutta ..	Mudiali Road ..	.. do ..	.. Assistant, Remington Typewriter Co (India), Ltd.
1704	,, Priya Nath	Tollygunge ..	.. Kasba village and P O..	.. do ..	.. Teacher.
1705	,, Prokash Chandra, BA ..	Metiabruz ..	.. Mudiali, P O Garden Reach ..	do ..	.. Clerk, Audit Department, B-N Railway, Kidderpore.
1706(S)	,, Rajendra Nath, BA ..	ditto ..	.. Mudiali	.. do ..	.. Head Master, Turner Morrison H E School.
1707	,, Rasik Lal ..	Bhowanipore ..	.. 114-2, Hazra Road ..	.. do ..	.. Landholder.
1708	,, Sadhan Chandra ..	Maheshtala ..	.. Krishnagar ..	do ..	.. Trader and Landholder.
1709	,, Satya Pradip ..	Nawapara ..	.. Nawabganj ..	.. do ..	.. Contractor, Order-supplier and Landholder.
1710	,, Sarat Chandra ..	Budge-Budge ..	.. Nangi, P O Maheshtala ..	do ..	.. Contractor.
1711	,, Sashi Bhusan ..	Kakdwip ..	.. Lot No. 5 Anandanagar ..	do ...	.. Landholder.
1712	,, Sris Chandra	Entally ..	.. 16, Ananda Palit Road ..	do ..	.. Head Master, Entally Academy.
1713	,, Surendra Nath ..	Metiabruz ..	.. Mudiali	.. do ..	.. Head Estimator, B-N Railway.
1714	,, Suresh Nath ..	Behala ..	.. Sarsuna	.. do ..	.. Contractor.

1715	„ Upendra Nath	..	Deganga	..	..	Shampukur, P O Hadupur	..	do	..	.. Landholder and Arathdar.
1716(S)	Palit, Bhupati Nath, MA, BT	..	Barrackpore	...	..	Govt. High School, Barrackpore	..	do	..	.. Assistant Teacher.
1717	„ Jayanta Kumar	..	Entally	..	..	71, Ananda Palit Road	..	do	..	.. Businessman.
1718(S)	Pandey, Sarat Chandra	..	Bhangore	..	..	Bodra ..	..	do	..	.. Teacher, Bodra H E School.
1719	„ Laksminarayan	..	Bhowanipore	..	..	54, Sambhu Nath Pandit Street	..	do	..	.. Zamindar and Merchant.
1720	Palodhi, Narendra Nath	..	Magrahat	..	..	Multi	..	do	..	.. Landholder.
1721	„ Nagendra Nath	..	Falta	..	..	Kantar, P O Falta ..	..	do	..	.. School Master.
1722	Panda, Kishori Mohan	..	Lakhikantapur, Kulpi		..	Lakhikantapur, P O Ghateshwar	..	do	..	.. ditto.
1723	Patra, Biraj Mohan	..	Sandeshkhali	..	..	Ghatihara	..	do	..	.. Talukdar, H E School.
1724	„ Girish Chandra	..	Sagore	..	..	ditto	..	do	..	.. Landholder.
1725	„ Madhusudan, BA	..	'Budge-Budge	..	..	Sarangabad, Budge-Budge	..	do	..	.. Teacher, Sarangabad.
1726	Poddar, Banku Behari	..	Chitpore	..	..	Srish Chaudhury Lane	..	do	..	.. Jute Merchant.
1727(S)	Pramanik, Bata Kristo	..	Bhowanipore	..	..	57-1, Lansdowne Road..	..	do	..	.. Zamindar.
1728	„ Susil Kumar	..	Diamond Harbour		..	Parulia ..	..	do	..	.. Teacher, Diamond Harbour H E School.
1729	„ Mani Mohan	..	ditto	..	..	Parulia, P O Diamond Harbour	..	do	..	.. Landholder.
1730	„ Lakshi Kanta	..	Rajarhat	..	..	Mahisbathan, P O Rajarhat-Bistupur.		do	..	.. ditto.
1731	Purohit, B J	..	Bhowanipore	..	..	23, Lansdowne Road ..	..	do	..	.. Chief Accountant, National Insurance Company.
1732	Purkait, Anukul Chandra	..	Mathurapur	..	..	Purkaitpore, P O Mathurapur	..	do	..	.. ditto.

Serial No.	Name.	Thana.	Place of abode—Village, road or street.	Nationality.	Quality or occupation.
	P				
1733	Purkait, Adhar Chandra ..	Baruipur ..	.. Bagdaha, P O Baruipur ..	Hindu ..	.. Chief Accountant, National Insurance Company.
1734	„ Behari Lal ..	Mathurapur ..	.. Singh's Chak	do ..	.. Head Master, Kowtola M E School.
1735(S)	„ Girish Chandra, BA ..	Tollygunge ..	.. Tollygunge	do ..	.. School Master, Garia H E School, p-s Tollygunge.
1736	„ Jogendra Nath ..	Mathurapur ..	.. Mathurapur	do ..	.. ditto.
1737	„ Suresh Chandra ..	ditto ..	.. ditto	do ..	.. Teacher, Mathurapur High School.
1738	„ Upendra Nath ..	Diamond Harbour	.. Mathur, P O Sarisha	do ..	.. School Master.
1739	„ Upendra Nath ..	ditto ..	.. Narbari	do ..	.. ditto.
	R				
1740(S)	Rahaman, Abdur ..	Beliaghata ..	.. 106, Narikeldanga Main Road ..	Muhammadan	.. Supervisor, Gordon and Co.
1741	„ Fazlar ..	ditto ..	.. 141, Narikeldanga Main Road ..	do ..	.. Tax Collector, Calcutta Corporation.
1742	„ Baziar ..	ditto ..	.. 9, Motilal Sur Lane	do ..	.. Merchant.
1743	Raisuddin Ahmed ..	Watgunge ..	.. 18-1, Koyla Sarak Road ..	do ..	.. Landholder.
1744	Rajagopal, P V S ..	Garden Reach ..	.. Paharpore Road	Indian ..	.. Accountant, Kesoram Cotton Mill, Garden Reach.
1745	Rakhit, Asoke Chandra ..	Manicktala ..	.. 181, Raja Dinendra Narain Street	Hindu ..	.. Merchant.
1746	„ Gour Chandra ..	Habra ..	.. Khanturia	do ..	.. Businessman.
1747	„ Hari Nath ..	Diamond Harbour	.. Sarisa	do ..	.. Assistant Teacher, Diamond Harbour H E School.

1748	„	Kali Prasanna	..	Baranagar	..	..	Palpara, Tebin Road ..	do	.. Trader.
1749	„	Sasi Bhusan	..	Alipore	..	..	51/1, Mayerpore Road ..	do	.. Merchant.
1750	„	Sivadas ..	..	Habra	..	..	Haidadpur ..	do	.. Sugar Merchant.
1751	Ray,	Amar Nath..	..	Beliaghata	..	..	30, Peari Mohan Sur Lane	do	.. Landholder.
1752	„	Arun Kumar	..	Ballygunge	..	..	Ritchie Road ..	do	.. Superintendent, Corporation Dhobikhana.
1753	„	Ashutosh	..	Beliaghata	..	..	3, Pitambar Bhattacharji Lane	do	.. Clerk in a Merchant Office.
1754	„	Ashutosh	..	Titagarh	..	..	Barakantalia, P O Nilganj	do	.. Landholder.
1755(S)	„	Bibhudhan, BA, BT	..	Bhowanipore	..	..	32, Chandra Nath Chatterjee Street	Christian	.. David Hare Training College, Ballygunge, Calcutta.
1756(S)	„	Bibhuti Bhusan	..	ditto	..	..	Bakul Bagan Road ..	Hindu	.. Superintendent, Mitra Institution, Bhowanipore.
1757	„	Bon Behari	..	Cossipore	..	..	30, Ratan Babu Road ..	do	.. Landlord.
1758	„	Benoy Kristo	..	Alipore	..	..	11, Chetla Central Road	do	.. Merchant.
1759	„	Bhutnath ..	..	Joynagore	..	..	Majilpur	do	.. Service-holder.
1760(S)	„	Bhusan Chandra	..	Bhowanipore	..	..	41, Sankaripara Road	do	.. Reader, Government of India Press, Calcutta.
1761(S)	„	Bhupendra Nath	..	Behala	..	..	Behala	do	.. Zamindar and hardware and general merchant, Behala.
1762	„	Bistupada ..	..	Baduria	..	..	Dakhin Chatra ..	do	.. Landholder.
1763	„	Brojendra Kumar	..	Titagarh	..	..	Barakantalia, P O Nilganj	do	.. Landlord.
1764	„	Dina Bandhu	..	Alipore	..	..	31/1, Joynuddi Mistry Lane	do	.. Merchant.
1765	„	Ganga Prasad	..	Behala	..	..	Behala	do	.. Clerk, Calcutta Corporation.

Serial No:	Name.	Thana.	Place of abode—Village, road or street.	Nationality.	Quality or occupation.
	R				
1766	Ray, Ganesh Chandra ..	Maheshtala ..	.. Chotta	Hindu ..	.. Clerk and Landholder.
1767	„ Gopendra Nath ..	Baduria ..	.. Khoragachi	do ..	.. Zamindar.
1768	„ Gopimohan ..	Entally ..	.. 27, Ananda Palit Road ..	do ..	.. Landholder.
1769	„ Girindra Nath ..	Jagatdal ..	.. Bhatpara	do ..	.. Clerk in Port Commissioners' Office, Calcutta.
1770(S)	„ Harendra Nath Choudhury.	Baranagar ..	.. Mathura Nath Choudhury Lane ..	do ..	.. Landholder.
1771	„ Hari Charan ..	Baraset ..	.. Nibadhui, P O Dhuttopukur ..	do ..	.. Teacher.
1772	„ Indu Bhusan ..	Jagatdal ..	.. Bhatpara	do ..	.. Landholder.
1773	„ Jagatchandra ..	Cossipore ..	.. 40, Barrackpore Trunk Road ..	do ..	.. Clerk.
1774	„ Jatindra Nath ..	Budge-Budge ..	.. Burul	do ..	.. President, U. B. Telari.
1775	„ Jatindra Mohan ..	Alipore ..	.. C3, Mayerpur Road	do ..	.. Zamindar and Rice Mill owner.
1776	„ Jatish Chandra ..	Behala ..	.. Behala	do ..	.. Landholder.
1777	„ Kalidas ..	Tollygunge ..	.. 1-C, Lake Road	do ..	.. Teacher and Poet.
1778	„ Kalikrishna ..	Bijpore ..	.. Bijpore	do ..	.. Teacher, Halishahar H E School.
1779	„ Kali Prosad ..	Diamond Harbour	.. Diamond Harbour	do ..	.. Businessman.
1780	„ Khetrahari ..	Titagarh ..	.. Sewly, P O Nilganj	do ..	.. Landholder.
1781	„ Krishna Kali ..	Alipore ..	.. 31/1, Joynuddin Mistree Lane ..	do ..	.. Rice Merchant.

1782	„	Krishna Chandra	..	Haroa	..	..	Khalisadi	..	..	do	..	..	Landholder.
1783	„	Lal Mohan	..	ditto	..	..	29/6, Chetla Central Road	..	do	..	..	Merchant.	
1784	„	Mani Mohan	..	Jagatdal	..	..	Bhatpara	..	..	do	..	..	Clerk, Hong-Kong Bank.
1785	„	Nagendra Nath	..	Falta	..	..	Manirampur	..	..	do	..	..	Landholder.
1786	„	Nagendra Nath	..	Canning Town		..	Canning Town	..	..	do	..	..	Merchant.
1787	„	Nalini Mohan	..	Deganga	..	..	Jadabpur, P O Hadipur	..	do	..	..	Landholder.	
1788(S)	„	Narendra Nath MA	..	Naihati	..	..	Naihati	..	..	do	..	..	Principal, Ripon College.
1789(S)	„	Nirode Kumar	..	Ballygunge	..	..	9, Old Ballygunge Road	..	do	..	..	Zamindar.	
1790	„	Panchanan	..	Garden Reach	..	..	Fatehpur	..	..	do	..	..	Clerk in a Merchant Office.
1791	„	Phani Bhushan	..	Bhowanipore	..	..	4, Gungaprasad Mukherji Road	..	do	..	..	Merchant.	
1792	„	Prafulla Kumar	..	Basirhat	..	..	Itinda	..	do	..	..	Landholder.	
1793	„	Rabindra Nath	..	Baduria	..	..	Khorigachi	..	..	do	..	..	Zamindar.
1794	„	Radhika Prasad	..	Alipore	..	..	16, Gopalnagar Road	..	do	..	..	Landholder.	
1795	„	Ramesh Chandra	..	Tollygunge	..	..	Dhakuria village and P O	..	do	..	..	Sharistadar, Baruipore Munsif's Court.	
1796	„	Ramani Mohan	..	Beliaghata	..	..	7B, Rajendra Laha Street	..	do	..	..	Student.	
1797	„	Rash Behari	..	Rajarhat	..	..	Salua, P O Rajarhat-Bistupur	..	do	..	..	Landholder.	
1798	„	Ratish Chandra	..	Baranagar	..	..	Kutighata	..	do	..	..	Clerk, Merchant Office, Calcutta.	
1799	„	Sarat Chandra	..	Jagatdal	..	..	Authpur	..	do	..	..	Government Pensioner.	

Serial No.	Name.	Thana.	Place of abode—Village, road or street.	Nationality.	Quality or occupation.
	R				
1800	Ray, Satishchandra ..	Amdanga ..	.. Jirat, P O Bajibpur ..	.. Hindu ..	.. Landholder.
1801(S)	„ Saurindranath, MA ..	Behala ..	.. Behala	.. do ..	.. Zaminder.
1802	„ Sudhindra Nath ..	Badu ..	.. Punra	.. do ..	.. ditto.
1803	„ Sudhir Ranjan ..	Bijpore ..	.. E B Ry Colony, Bijpore ..	do ..	.. Chief Draftsman, Loco shop, E B Ry, Kanchrapara.
1804	„ Surendra Nath ..	Diamond Harbour ..	.. Chanda	.. do ..	.. ditto.
1805	„ Surendra Nath ..	Rajarhat ..	.. Bhatinda, P O Rajarhat-Bistupur	do ..	.. Assistant, Executive Engineer's Office, E B Ry, Sealdah, and Landholder.
1806	„ Tarak Nath ..	Baduria ..	.. Palta, P O Punra ..	.. do ..	.. Merchant.
1807	„ Upendra Nath ..	Bhowanipore ..	.. 44, Chaulpati Road ..	.. do ..	.. Contractor.
1808	„ Upendra Chandra ..	Titagarh ..	.. Seuli	.. do ..	.. President Panchayat.
1809	Ray Chaudhuri, Amulya Dhan	Dum-Dum ..	.. Birati	.. do ..	.. Clerk, Newman & Co.
1810(S)	„ Ashutosh ..	Bhangore ..	.. Budra	.. do ..	.. Landholder.
1811	„ Bankim Chandra.	Hasnabad ..	.. Taki	.. do ..	.. Zamindar's Manager.
1812	„ Charu Krista	Basirhat ..	.. Basirhat	.. do ..	.. Merchant.
1813	„ Chuni Lal	Jaynagar ..	.. Gocharan	.. do ..	.. Zamindar.
1814	„ Dwijendra Nath	Basirhat .	.. Shibhati	.. do ..	.. Landholder and Government servant.
1815(S)	„ Ganendra Nath.	Cossipore ..	.. 37, Cossipore Road ..	.. do ..	.. Zamindar.

1816(S)		Gunendra Nath.	Hasnabad	..	..	Taki	..	do	..	.. ditto.
1817	,,	Hemendra Nath.	Cossipore	..	..	6, Pran Nath Chaudhuri Lane	..	do	..	.. Landholder
1818	,,	Hemanga Nath.	ditto	..	..	37, Cossipore Road ..	..	do	..	.. Landlord.
1819	,,	Jatindra Nath.	Basirhat	..	..	Basirhat	..	do	..	.. Landholder
1820	,,	Janaki Nath	Sonarpur	..	..	Gazipur	..	do	..	.. Superintendent, Hoare Miller Co's Press.
1821	,,	Jatindra Mohan.	Tollygunge	..	..	110-1, Lake Road ..	..	do	..	.. Clerk.
1822	,,	Kamakhaya Nath.	Behala	..	..	Barisa	..	do	..	.. Landholder.
1823	,,	Khagendra Nath.	ditto	..	..	ditto	..	do	..	.. Clerk, Customs House, Calcutta.
1824(S)	,,	Khirode Chandra.	ditto	..	..	ditto	..	do	..	.. Head Master, Barisa H E School.
1825	,,	Kula Chandra	Bhowanipore	..	..	South Suburban School (Main)	..	do	..	.. Teacher.
1826	,,	Lalit Mohan	Beliaghata	..	..	98, Narikeldanga North Road	..	do	..	.. Contractor.
1827	,,	Mahatap Chandra.	Hasnabad	..	..	Saidpur	..	do	..	.. Zamindar.
1828	,,	Manmohan ..	ditto	..	..	ditto	..	do	..	.. ditto.
1829	,,	Nalini Mohan	Bhowanipur	..	..	10, Rani Sankari Lane	..	do	..	.. Overseer.
1830	,,	Mrinal Mohan	Hashnabad	..	..	Saidpur	..	do	..	.. Zamindar
1831	,,	Nirode Kali ..	ditto	..	..	Taki	..	do	..	.. ditto.
1832(S)	,,	Nirmal Kumar	ditto	..	..	ditto	..	do	..	.. ditto.
1833		Preo Nath ..	Rajarhat	..	..	Shalua, P O Dum-Dum	..	do	..	.. ..

Serial No.	Name.	Thana.	Place of abode—Village, road or street.	Nationality.	Quality or occupation.
	R				
1834(S)	Ray Chaudhuri. Provash Chandra, Esc.	Sonarpur ..	Rajpur ..	Hindu ..	Demonstrator, City College.
1835	„ Probodh Kumar.	Baruipur ..	Baruipur ..	do ..	Zamindar.
1836	„ Probodh Kumar, II	ditto ..	Baruipur old house ..	do ..	ditto.
1837	„ Profulla Nath	Cossipore ..	43/A, Cossipore Road ..	do ..	ditto.
1838	„ Rabindra Nath.	Behala ..	Barisa ..	do ..	Landholder.
1839	„ Rajendra Lal.	ditto ..	ditto ..	do ..	Contractor.
1840	„ Ramendra Kumar	Baruipur ..	Baruipur ..	do ..	Zamindar.
1841	„ Sachindra Nath.	Hasnabad ..	Taki ..	do ..	ditto.
1842	„ Sachi Bilas ..	Behala ..	Bonomali Naskar Road ..	do ..	Assistant Manager, "Amrita Bazar Patrika."
1843	„ Satyaranjan	Baduria ..	Mathabhanga ..	Christian ..	Superintendent, Mathabhanga M E School
1844	„ Sibpado ..	Behala ..	Barisa ..	Hindu ..	Works in the Drawing office Survey of India, 13, Wood Street, Calcutta.
1845	„ Sita Das ..	Sonarpur ..	Jagatdal ..	do ..	Landholder.
1846	„ Srish Chandra	Hasnabad ..	Jalapur ..	do ..	Talukdar.
1847	„ Subodh Chandra ..	Bhowanipur ..	52 Kalighat Road ..	do ..	Electric Contractor.
1848	„ Surendra	Hashnabad ..	Saidpur ..	do ..	Zamindar.

1849	,	Tarak Das	..	Baruipur	..	..	Baruipur P O	..	do	..	..	Zamindar Kally Villa, Baruipur.
1850(S)	„	Tar Das	..	Bhowanipore	..	..	56, Paddapukur Road	..	do	.	..	Manager, Bhowanipore Banking Corporation, Ltd.
1851	„	Uma Prasad		ditto	..	..	63, Sambhunath Pandit Street	..	do	..	..	Zamindar.
1852(S)	Routh, Purna Chandra		..	Sagore	..	..	Banstola, P O Mungonga	..	do	..	..	Naib or the lessee.
1853	Rudra, Gopal Chandra		..	Beliaghata	..	..	91, Charakdanga Road	..	do	..	..	Clerk.
1854	„	Surendra Nath	..	Budge-Budge	..	..	Budge-Budge	..	do	..	..	Head Clerk, Indo-Burma Oil Co's Depot at Budge-Budge.
1855	Rahaman, Fazloo		..	Dum-Dum	..	..	Station Road, Dum-Dum	..	Muhammadan		..	Government Pensioner
1856	„	Matiar	..	Manicktala	..	..	78, Raja Dinendra Street	..	do	..	..	Landholder.
	S											
1857	Sadhukhan, Benode Bihari		..	Baraset	..	..	Baraset	..	..	Hindu	..	.. Trader
1858	„	Sibchandra	..	Sandeshkhali	..	..	Hatgachha	..	..	do	..	.. President, Panchayat
1859	Sadhan, Atul Chandra		..	Tollygunge	..	..	23, Russa Road, South	..	do	..	..	Mill-owner
1860	„	Gour Mohan	..	Bijpore	..	..	Bijpore	..	..	do	..	.. Honorary Magistrate and Merchant.
1861	Sadkhan, Bhuban Chandra		..	Watgunge	..	..	27, Orphanganj Road	..	do	..	..	Merchant
1862	Sahebzada Monir Alum		..	Tollygunge	..	..	1, Mollahat Road	..	Muhammadan		..	Zamindar
1863	Santra, Bhabataran		..	Hashnabad	..	..	Amlani	..	..	Hindu	..	.. Landholder.
1864	Shaikh Anwarali		..	Amdanga	..	..	Rahana	..	..	Muhammadan	..	ditto
1865	„	Golap Ali	..	Ditto	..	..	Baichgacha.	..	..	do	..	.. ditto.

Serial No.	Name.	Thana.	Place of abode—Village, road or street.	Nationality.	Quality or occupation.
	S				
1866	Shaikh Golam Rahman ..	Hasnabad ..	.. P O Hasnabad ..	.. Muhammadan	.. Landholder.
1867	,, Meher Ali ..	Kulpi ..	.. Kalitola, P O Kulpi ..	.. do ..	.. ditto.
1868	,, S. Uddin	Bhowanipur ..	.. 42, Nandon Road ..	.. do ..	.. Landlord
1869	Saiyid Manjur Ali ..	Basirhat ..	.. Sampala	.. do ..	.. ditto.
1870	Shaikh Maniruddin Ahmad ..	Beniapukur ..	.. 1, Hajee Lane ..	.. do ..	.. Service-holder.
1871	,, Wahed Buksh ..	Tollygunge ..	.. 37, Mollahat Road ..	.. do ..	.. Landlord.
1872(S)	,, Hormujali, BA ..	Kulpi ..	.. Kalitola	.. do ..	.. Landholder.
1873	,, Mahabur Rahaman ..	Baduria ..	.. Baduria	.. do ..	.. Naib of the Laha Estate.
1874	,, Mahammad Sakoor ..	Chitpore ..	.. 62, Barrackpore Trunk Road ..	do ..	.. Clerk, Port Commissioners' Traffic Department, P. T. Ry, Bagbazar.
1875	,, Safiq Ahmed ..	Haroa ..	.. Haroa	.. do ..	.. Landholder.
1876	,, Amir Ali	Baranagar ..	.. Neogi Para ..	.. do ..	.. Clerk.
1877	S A F Quader	Baliaghata ..	.. 7A, Motilal Sen Lane ..	.. do ..	.. Landlord.
1878	Saiyid Ali Molla	Basirhat ..	.. Boro Gobra, P O Jaduratı	.. do ..	.. Landholder
1879	,, Habibur Rahaman ..	Manicktala ..	.. 3, Muraripukur Lane ..	.. do ..	.. Landholder and clerk.
1880	,, Hamid Hossain ..	Entally ..	.. 24, Esmail Street ..	.. do ..	.. Asstt E B Ry (office).
1881	,, Matlu Ahmed ..	do ..	.. 40, ditto ..	.. do ..	.. Landholder.

1882	„	Muhammad Ziaul Huq.	Watgunge ..	28, Dent Mission Road..	..	do	..	
1883	„	Nazra Moslem ..	Deganga	Bhasila, P O Deganga ..	..	do	..	.. Clerk High Court, and Land holder
1884	„	Mehdi Ali	Basirhat ..	.. Sampala	..	do	..	.. Landholder.
1885	„	Montaj Hossain ..	Bijpore ..	.. Kanchrapara ..	..	do	..	.. Teacher.
1886	„	Hossain Ertiza ..	Basirhat ..	.. Basirhat	..	do	..	.. Landholder and Honorary Magistrate
1887	„	Hadi Kazemini .	Tollygunge ..	.. Naya Mahal Tollygunge	..	do	..	.. Merchant Matwali & Trustee of Estates.
1888	Samanta,	Ashutosh ..	Cossipore ..	.. 21, Kedar Das Lane ..	..	Hindu	..	.. Contractor and Landholder.
1889	„	Bama Charan ..	Diamond Harbour	.. Bhaduria P O Sararhat	..	do	..	.. Teacher.
1890	„	Krishna Mohan ..	Budge-Budge ..	.. Senpukur, P O Budge-Budge	..	do	..	.. ditto.
1891	„	Rashik Lal ..	Bhowanipore ..	.. 29, Hari Chatterjee Street	.	do	..	.. Merchant.
1892	„	Gosain Das ..	Budge-Budge ..	.. Kalinagar, P O Bawali..	..	do	..	.. Master, Bawali School
1893	„	Romesh Chandra ..	Sagore ..	.. Ghoramara, P O Murinanga	..	do	..	.. Naib tahsildar grantee.
1894	„	Satish Chandra ..	Cossipore ..	12, Gour Sundar Sett Lane	..	do	..	.. Contractor and Landholder
1895	„	Charu Chandra ..	Baduria ..	.. Arbelia	..	do	..	.. Landholder.
1896	Sapui,	Bijay Kumar ..	Bistupur ..	.. Samair, P O Bistupur ..	..	do	..	.. Naib and Landholder.
1897	„	Jogendra Nath ..	Sonarpur ..	.. Dear.. P O Sonarpur ..	..	do	..	.. Landholder.
1898	„	Jasimuddin ..	Budge-Budge ..	.. Banjanhera ..	..	Muhammadan	..	Merchant and Commissioner, Budge-Budge Municipality.
1899	„	Trahed Ali	Budge-Budge ..	.. Joychandipur ..	..	do ..	..	Landholder.

Serial No.	Name.	Thana.	Place of abode—Village, road or street.	Nationality.	Quality or occupation.
1900	Sardar, Md Naruddin	Hashnabad	Kalootola	Muhammadan	Landholder.
1901	„ Md. Sayem	Baduria	Faridkuti	do	Honorary Magistrate.
1902	„ Montaj Ahmed	Haroa	Kharabala	do	Landholder and President, Panchayat.
1903	„ Ismail	Sarupnagar	Bithari	do	ditto.
1904(S)	„ Khoda Bux	Hashnabad	Bhabia	do	School Master.
1905	„ Md. Faizar Rahaman	Swarupnagar	Byarghatta	do	ditto.
1906	„ Ismail	Hashnabad	Kalutala	do	Landholder.
1907	„ Bissumbhor	Kakdwip	Tapakhali, Lot No. 10, P O Kakdwip.	Hindu	ditto.
1908	„ M Kinu	Hashnabad	Sandelirbil	Muhammadan	ditto.
1909	Sarnakar, Kristo Lal	Watganj	1, Rang Lal Street	Hindu	Merchant.
1910	Sarkar, Amar Nath	Magrahat	Mohanpur	do	Landholder.
1911	„ Aswini Kumar, BA	Budge-Budge	Burul	do	Head Master, Burul H E School.
1912	„ Bankim Bihari	ditto	Peali, P O Burul	do	Landholder and Moneylender.
1913	„ Bhola Nath, BA	Bhowanipore	11, Kalidas Patitandi Lane	do	Merchant.
1914(S)	„ Bidhu Bhusan	Beliaghata	69, Beliaghata Main Road	do	Zamindar and Municipal Commissioner, Manicktala Municipality.
1915	„ Bhudeb Chandra	Haroa	Dhuturdaha	do	Zamindar.

1916	„	Benode Behari ..	Alipore ..	..	6-V, Aftab Mosque Lane ..	..	do ..	..	Typist, Calcutta Corporation.
1917	„	Bepin Behari ..	Haroa ..	..	Haroa P O ..	..	do ..	..	Head Master, M E School, Haroa.
1918	„	Bepin Behari ..	Falta ..	..	Mala, P O Falta ..	..	do ..	..	Landholder.
1919	„	Prafulla Chandra ..	Magrahat ..	..	Benipur	..	do ..	..	Clerk.
1920	„	Bepin Chandra ..	Haroa ..	..	Dhuturdaha ..	..	do ..	..	Zamindar.
1921	„	Debendra Nath ..	Tollygunge ..	..	Baistamghata ..	..	do ..	..	Landholder.
1922	„	Ganapati	Beliaghata ..	..	69, Beliaghata Main Road ..		do ..	..	Zamindar.
1923(S)	„	Harendra Krishna (Deb)	Falta ..	..	Mala, P O Falta ..	..	do ..	..	Landholder.
1924	„	Harendra Nath ..	Barrackpore ..	..	Manirampore ..	..	do ..	..	1st Assistant teacher, D P H E School, Barrackpore.
1925	„	Indu Bhusan ..	Bhowanipore ..	..	98-2 Harish Mukherjee Road ..		do ..	..	Clerk, High Court.
1926	„	Jatindra Nath ..	Diamond Harbour	..	Mashat	..	do ..	..	Landholder.
1927	„	Jatindra Nath ..	Haroa ..	..	Minakhan, p.-s. Minakhan ..		do ..	..	Supervisor, Port Canning Land Improvement Co.
1928	„	Jatish Chandra ..	Hasnabad ..	..	Thuba P O Taki ..	..	do ..	..	Landholder.
1929	„	Jogendra Nath ..	Dum-Dum ..	..	Dakhin Duari ..	..	do ..	..	Municipal Commissioner and Landholder.
1930(S)	„	Krishna Charan ..	Budge-Budge ..	..	Shampur	..	do ..	..	Common Manager, Sarkar's Estate, Shampur, Assistant Secretary, Pran Krishna H E School, Budge-Budge.
1931		Kunja Bihari	Alipore ..		6-A, Aftab Mosque Lane ..		do ..	..	Draftsman.
1932		Manindra Nath	Bhowanipore ..	..	136, Ashutosh Mukherjee Road, c-o, Sarkar Brothers.		do ..	..	Merchant and Landholder.

Serial No.		Name.	Thana.	Place of abode—Village, road or street.	Nationality.	Quality or occupation.
		S				
1933	Sarkar,	Nalini Bihari ..	Baraset ..	.. Kuberpore	.. Hindu ..	.. Clerk and Municipal Commissioner.
1934	,,	Rev. Nrityа Gopal ..	Beniapukur ..	.. 9-3, Hatibagan Road	.. Christian	.. Minister, Methodist Episcopal Church.
1935	,,	Nanda Lal ..	Alipore ..	.. 25, Bridge Road ..	.. Hindu ..	.. Zamindar.
1936	,,	Nibaran Chandra ..	Manicktala ..	.. 2, Gurudas Dutta Garden Lane, Santi Rice Mill.	do ..	.. Merchant.
1937	,,	Naresh Chandra ..	Barrackpore ..	.. Monirampur ..	.. do ..	.. Store-keeper, M W S Office, Ishapur.
1938(S)	,,	Panchanan ..	Kulpi ..	.. Kamerchalk ..	.. do ..	.. Head Master, Kulpi M E School.
1939	,,	Prakash Chandra, BA ..	Budge-Budge ..	.. Shampur	.. do ..	.. Assistant Teacher, P K H E School, Budge-Budge.
1940	,,	Rajkumar ..	Diamond Harbour	.. Sarisha, P O Sarisha ..	.. do ..	.. Government Pension-holder, late Clerk, P W D Office.
1941(S)	,,	Sham Lal ..	Tollygunj(C P) ..	.. 49/9, Mudiali P. O. Tollygunj	. do ..	.. Sub-Editor of the "Capital."
1942	,,	Santosh Kumar ..	Bistupur ..	.. Udairampur ..	.. do ..	.. Railway employee.
1943	,,	Sarat Chandra ..	Bhowanipur ..	.. 10, Kalidas Patitandi Lane	.. do ..	.. Clerk, Imperial Bank of India.
1944	,,	Satya Kinkar ..	Bijpore ..	.. E B Ry Colony, Bijpore	.. do ..	.. Superintendent, Dy Auditor's Office, E B Ry, Kanchrapara.
1945	,,	Surendra Nath ..	Falta ..	.. Banganagar ..	.. do ..	.. Landholder.
1946	,,	Tincowri	Budge-Budge ..	.. Shampur	.. do ..	.. Clerk, Accountant-General, Bengal's Office, Calcutta.
1947	,,	Upendra Nath ..	ditto ..	.. Alampur ..	... do ..	.. Landholder.
1948	,,	Upendra Nath ..	Alipore ..	.. 15A, Mayerpore Road ..	.. do ..	.. Merchant.
1949	,,	Wazed Ali ..	Bistupur ..	.. Kowsadangi ..	.. Muhammadan	.. Landholder

1950	Sarkel, Bhabesh Chandra	Baduria	Baduria	Hindu	Trader.
1951	Sastri, Prafulla Kumar	Bhowanipore	27, Gobinda Ghosal Lane	do	Astrologer.
1952	Sawoo, Pulin Behari	Basirhat	Dhankuria	do	Zamindar.
1953(S)	,, Sarat Chandra	ditto	ditto	do	ditto.
1954	Seal Surendra Nath	Bhowanipore	3, Indra Roy Road	do	Businessman.
1955	,, Surja Kumar	Behaghata	23, Peari Mohan Sur's Garden Lane	do	Head Assistant, Asiatic Petroleum
1956(S)	Sen, A C	Tollygunj	P 400 Russa Road	do	Engineer.
1957	,, Abani Bhusan	Bhowanipur	3-E, Kundu Road	do	Superintendent, Satya Bhama Girls' School.
1958	,, Akhoy Kumar	Beniapukur	22, Jannagore Road	do	Landholder.
1959	,, Amulya Krishna	Bhowanipore	23, Gobinda Ghosal Lane	do	Clerk, India Company, Ltd.
1960	,, Bama Charan	Budge-Budge	Telari, P O Burul	do	Clerk and President Panchayat of Union No. XI.
1961	,, Basanta Kumar	Magrahat	Mollerchak, P O Magrahat	do	Service-holder.
1962	,, Basanta Kumar	Baraset	Purbapara, P O Baraset	do	Assistant, Director of Public Instruction.
1963(S)	,, Birendra Nath	ditto	Baraset	do	Head Master, Baraset Government School.
1964	,, Dhirendra Nath	Magrahat	Multi	do	Clerk.
1965	,, Gati Krishna	Bijpore	E B Ry Colony	do	Head Clerk, Deputy Loco Superintendent's Office, E B Ry, Kanchrapara.
1966(S)	,, Kumud Nath BA	Hasnabad	Taki	do	Assistant Head Master, Taki Government School.
1967	,, Mati Lal	Titagarh	Charnock, Bowbazar	do	Government Servant.

Serial No.	Name.	Thana.	Place of abode—Village, road or street.	Nationality.	Quality or occupation.
	8				
1968(S)	Sen, Dr. Nikhil Ranjan ..	Ballygunge ..	.. 2, Ritchie Road ..	.. Hindu ..	.. Professor, College of Science.
1969	,, Norendra Nath ..	Bistupur ..	.. Bistupur H E School ..	.. Christian	.. School Master.
1970	,, Pravash Chandra ..	Khardah ..	.. Khardah ..	.. Hindu ..	.. Passing Officer, Imperial Bank, Calcutta.
1971	,, Ramesh Chandra ..	Bhowanipore ..	.. 19, Rupnarayan Nandan Lane ..	do ..	.. Clerk, Calcutta University.
1972(S)	,, S C.	Bahaghatta ..	.. 42-1, Richi Road ..	.. do ..	.. Landlord
1973	,, Satis Chandra ..	Naihati ..	.. Barada Road ..	.. do ..	.. Bank Accountant.
1974	,, Susarmoy	Barangar ..	.. Palpara	.. do ..	.. Landholder.
1975(S)	,, Subodh Chandra, MA ..	Bhowanipur ...	.. 12-1, Kalidas Patitunda Lane ..	do ..	.. Professor, Presidency College.
1976	,, Tanu Lal	Watgunge ..	.. 46, Circular Garden Reach Road ..	do ..	.. Merchant.
1977	,, Upendra Nath ..	Dum-Dum ..	.. Dum-Dum Cantonment ..	do ..	.. Landholder and Merchant.
1978	,, Upendra Lal ..	Ballygunge ..	.. 36, Ballygunge Circular Road ..	do ..	.. Superintendent, Vaccination Depôt, Calcutta Corporation.
1979	Sen Gupta, Bankim Chandra	Manicktala ..	.. 67, Telingabagan Lane ..	do ..	.. Contractor.
1980	,, Birendra Nath ..	Bhowanipur ..	.. 20-1, Gobinda Ghosal Lane ..	do ..	.. Businessman
1981(S)	,, Monaranjan, BA,BT	Entally ..	.. 3, Palmerbazar Road ..	.. do ..	.. Teacher, Christ Church School.
1982	,, Satis Chandra, BA,BT.	Alipore, ..	.. 6B, Naba Roy Lane ..	.. do ..	.. Assistant Head Master
1983	,, Surendra Nath ..	Dum-Dum ..	.. Nager Bazar ..	.. do ..	.. Municipal Overseer.

1984	„	Susil Kumar	..	Garden Reach	..	..	72-3-3, GardenReach Road	..	do	.. .. Assistant Shed Foreman, Port Commissioners.
1985	Sha,	Salik Prosad	..	Barrackpore	..	..	Orderly Bazar	..	do	.. .. Landholder.
1986	Shah,	Brindaban	..	Sarupnagar	..	..	Tentulia, P O Punra	..	do	.. .. ditto.
1987	Shaha,	Bholanath, BA	..	Barrackpore	..	..	Sadar Bazar, Gola Mehal	..	do	.. .. Graduate.
1988	„	Ashutosh ..	..	Behala	..	..	Kamarpara	..	do	.. .. Merchant.
1989(S)	„	Gnanendra Nath	..	Bhowanipore	..	..	114-2, Hazra Road	..	do	.. .. Clerk, Corporation Office.
1990	„	Kalidas ..	..	Baruipur	..	..	Baruipur, Suripara	..	do	.. .. Landholder.
1991	„	Lalit Mohan	..	Bhowanipore	..	..	71, Kalighat Road	..	dō	.. .. Timber Merchant.
1992	„	Mahendra Nath " Baishya."		ditto	..	..	41, Haris Chatterjee Street.	..	do	.. .. Merchant.
1993	„	Narain Chandra	..	Titagarh	..	..	Bowbazar, Titagarh	..	do	.. .. Contractor.
1994	„	Ramprosad	..	Jagatdal	..	..	Jagatdal ..	..	do	.. .. Municipal Commissioner.
1995	Shaw,	Pulin Behari	..	Basirhat	..	..	Thankara ..	..	do	.. .. Landholder.
1996	„	Jogeswar ..	..	Barrackpore	..	..	Sadar Bazar	..	do	.. .. Wine Merchant.
1997	„	Lakhi Prosad	..	ditto	..	..	Orderly Bazar	..	do	.. .. Clerk, District Engineer's Office, 24-Parganas.
1998(S)	„	Manaranjan, BA	..	Bistupur	..	..	Bistupur ..	..	Christian	.. Assistant Teacher, Bistupur Mission School.
1999	„	Nirode Chandra	..	Barangar	..	..	Suripara, Baranagar ..	..	Hindu	.. .. Trader.
2000	„	Radhika Mohan	..	Beliaghata	..	..	16, Beliaghata Main Road	..	do	.. .. Landholder.
2001	„	Surendra Nath	..	Watgunge	..	..	43, Circular Garden Reach Road	..	do	.. .. Merchant.

Serial No.	Name.	Thana.	Place of abode—Village, road or street.	Nationality.	Quality or occupation.
	S				
2002	Shaw, Ram Prosad ..	Barrackpore ..	.. Barrackpore Sadar Bazar ..	Hindu ..	.. Banker.
2003	Shawoo Sarat Chandra ..	Basirhat ..	.. Dhanyakuria	do ..	.. Zamindar.
2004	Sow, Sailendra Nath, MA ..	Baranagar ..	.. Victoria H E School	do ..	.. Second Master.
2005	Shahji Mahammed (Shahaj) ..	Baraset ..	.. Panihara	Muhammadan ..	.. Landholder.
2006(S)	Shaik Abdul Majid ..	Ekbalpur ..	.. 5-5, Ekbalpore Lane	do ..	.. Clerk, Alipore Central Jail Office.
2007	,, Abdul Rahaman ..	Metiabruz ..	.. P O Bartola, Sheikpara-Karbala Road, Bartola.	do ..	.. Owner of a tailoring business.
2008(S)	,, Abdus Sattar ..	Maniktala ..	.. 95B, Belgachia Road	do ..	.. Head Master, Calcutta Free Primary School.
2009	,, Ahmed Ali	Nawpara ..	.. Ichapore	do ..	.. Clerk, Ichapore Rifle Factory.
2010	,, Barkhardar ..	Amdanga ..	.. Rana, P O Amdanga	do ..	.. Trader and Landholder.
2011	,, Esharath Hossain ..	Bhangore ..	.. Saihati	do ..	.. Landlord.
2012	,, Khoda Bux ..	Beniapukur ..	.. 4-1, Tantibagan Lane	do ..	.. Contractor.
2013	,, Kala Chand ..	Amdanga ..	.. Baichgacha	do ..	.. Landholder.
2014	,, Makshed Ali ..	Moheshtola ..	.. Mamenpur, P O Moheshtola ..	do ..	.. Clerk of P W D.
2015	,, Odiatulla	Baraset ..	.. Kazipara	do ..	.. Landholder Employee in the Office of Chief Inspector of Boilers, Bengal, Bihar, Orissa and Assam, at 40-1-A, Free School Street, Calcutta
2016	,, Rafiq Ahmed ..	Haroa ..	.. Haroa	do ..	.. Landholder.
2017	,, Rasul Bux	Barrackpore ..	.. Sadar Bazar	do ..	.. Tenure-holder, Contractor and Cantonment member.

2018	„ Tuzammal Hossain ..	Ballygunge ..	48, Jhowtola Road	do ..	..	Landholder.
2019(S)	Sahebzada Muhammad Fraidoon Shekoh.	Tollygunge (Calcutta Police).	25, Prince Anwar Shah Road, Tollygunge	do ..	..	Independent gentleman.
2020(S)	Shastri, Ashutosh, MA ..	Jaynagar	Dakhin Barasat	Hindu ..	..	Government Pensioner.
2021	„ Panchanan ..	Jagatdal	Bhatpara	do ..	..	Pandit.
2022	Shee Sham Lall	Bhowanipore	1-2, Beninandon Street ..	do ..	..	Merchant.
2023(S)	Siromoni, Brojendra Lal, MA, BL	Nawpara	Ichapore Park .. .	do ..	..	Assistant to Employment Manager, Ichapore Factory.
2024	Simlai, Nalini Mohan ..	Amdanga	Bodai	do ..	..	Landholder.
2025	Singha, Abani Kumar, BA ..	Mathurapur	Mathurapur	do ..	..	Assistant Teacher, Mathurapur H E School and Landholder.
2026	„ Dhirendra Nath ..	ditto	ditto	do ..	..	Landholder.
2027	„ Apurba Kumar ..	Alipore .. .	29, Chetla Central Road ..	do ..	..	Government Pensioner
2028	„ Basanta Kumar ..	Canning Town	Nebookhali	do ..	..	Landholder.
2029(S)	„ Jogendra Nath ..	Beliaghata	82A, Charakdanga Road ..	do ..	..	Merchant.
2030	„ Kunja Bihari ..	Mathurapur	Mathurapur P O	do ..	..	Landholder.
2031	„ Manindra Nath ..	ditto	ditto	do ..	..	Assistant Teacher, Mathurapur H E School and Landholder
2032	„ Nabin	Kakdwip	Madhabnagar, Lot No. 9, P O Kakdwip.	do ..	.	Landholder.
2033(S)	„ Narendra Nath ..	Beliaghata	82C, Charakdanga Road ..	do ..	..	Merchant.
2034	„ Promotha Nath ..	Barrackpore .. .	35, Orderly Bazar Road, Barrackpore.	do ..	..	Accountant, office of the Deputy Assistant Controller, Army Factory Accounts, Rifle Factory, Ichapore.

Serial No.	Name.	Thana.	Place of abode—Village, road or street.	Nationality.	Quality or occupation.
	S				
2035	Singha, Sarat Chandra ..	Beliaghata ..	.. 6-4-B, Ward Institution Street ..	Hindu ..	.. Clerk, E B Ry.
2036	,, Surendra Nath ..	Cossipore ..	.. 25A, Pran Krishna Mukherji Road, Tala, Calcutta.	do ..	.. Merchant.
2037	Singha Ray, Suresh Chandra ..	Kulpi ..	.. Hatberia Katchary, Kulpi ..	do ..	.. Zamindar.
2038(S)	Sinha, Pulin Krishna, BA ..	Nawpara ..	.. Ichapore Park	do ..	.. Assistant Cashier, Ichapore Rifle Factory.
2039(S)	,, Amrita Lal ..	Basirhat ..	.. Basirhat	do ..	.. Deputy Inspector of Schools
2040	,, Rasik Lall ..	Bhowanipore ..	.. 70, Kansaripara Road	do ..	.. Head Master, N M H E School
2041	Singh, Kapur Birdi ..	Tollygunge ..	.. P 230-1, Russa Road	do .	.. Employee in Khalsa Syndicate
2042	,, Ajaib	Bhowanipore ..	.. 70, Ashutosh Mukherjee Road ..	do ..	.. Manager, Khalsa Motor and General Trading Co
2043	,, Surendra Nath ..	Bistupur ..	.. Sukdebpur	do ..	.. Landholder.
2044	,, Dr Uttam	Bhowanipore ..	.. 35, Harish Mukherjee Road ..	do ..	.. Employee in Khalsa Syndicate
2045(S)	Some, Ram Gopal, BSC ..	Chitpore ..	.. 32-1, Khelat Babu's Lane ..	do ..	.. Head Master, Areadah H E School.
2046	Srimani, Bamapada ..	Nawpara ..	.. Ichapore Rifle Factory ..	do ..	.. Clerk, Ichapore Rifle Factory
2047	,, Charu Chandra ..	Manicktala ..	.. 9, Ultadanga Main Road ..	do ..	.. Engineer.
2048	Sultan, R	Bhowanipore ..	.. 5, Kundu Road	Muhammadan	.. Assistant Head Master, N M H E School.
2049(S)	Sur, Amulya Charan ..	Cossipore ..	.. 100, South Sinthee Road ..	Hindu	.. Contractor
2050	,, Panchanan	Bijpore ..	.. Jettia	do ..	.. President, Jettia Majhipara Union Board
2051	,, Subodh Chandra ..	Khardah ..	.. Bandipore	do ..	.. Audit Clerk, E B Railway

2052(S)	„ Sarat Chandra	.. ditto	.. Patulia Bandipore	..	do	..	.. Government Pensioner.
2053	„ Rajendra Lall	.. Cossipore	.. 57, Barrackpore Trunk Road	..	do	..	.. Assistant Manager, Estate of Late Gopeswar Dutta, Phulbagan.
2054	Sikari Mujibar Rahaman	.. Hashnabad	.. Bhowanipore	..	Muhammadan		.. Landholder and President Panchayat.
2055	Subranavia, T S	.. Bhowanipore	.. 13-C, Jogesh Mittra Road	..	Hindu	..	.. Accountant, Merchant office.
	T						
2056	Talapatra, Chandi Charan	.. Bhowanipore	.. 4, Sankaripara Road	..	Hindu	..	.. Bailiff, Calcutta Corporation, and house-owner.
2057	Tarafdar, Bhupendra Nath	.. Habra	.. Malikberia ..	..	do.	..	.. Landholder.
2058	„ Jitendra Nath	.. Deganga	.. Jhikra, P O Hadipur	..	do	..	.. ditto.
2059	Tewari, Jagannath	.. Dum-Dum	.. Dum-Dum Cantonment	..	do	..	.. Contractor, Military Works, Dum-Dum.
	U						
2060(S)	Upadhayay, Benode Behari	.. Baraset	.. Jugulia, P O Chota Jagulia	..	Hindu	..	.. Clerk, Grand Hotel, Calcutta.
2061	„ Jnanendra Nath	Magrahat	.. Rangilabad	..	do	..	.. Landholder.
2062	„ Bhupendra Nath	ditto	.. Rajballavpur, P O Rangilabad	..	do	..	.. School Master.
2063	„ Panchanan	.. ditto	.. ditto	..	do	..	.. Jotedar.
2064	Venkateswaran, S ..	.. Bhowanipore	.. 23-D, Mohendra Road ..	..	do	(Madrasi)	.. Examiner of Patents.
2065	Dey, Nagendra Nath	.. ditto	.. 63-C, Kalighat Road	..	do	..	.. Businessman.
2066	Ghosh, Narayan Das, B A	.. Baruipur	.. Saleypur	..	do	..	.. Assistant Teacher, Baruipur H E School.
2067	Sarkar, Kunja Behari	.. Budge Budge	.. Kalipur	..	do	..	.. Landholder.

24-Parganas Collectorate.
The 7th July 1931.

K. L. Mookerji,
Additional Collector, 24-Parganas.

List of Special Jurors for the year 1931.

It is notified that the objections to the following list of Special Jurors for the district of 24-Parganas for the year 1931 will be heard and determined by the Sessions Judge and the Collector of the district at the Sessions Court, Alipore, at 12 noon on 29th August 1931 :—

Serial No.	Name.	Thana.	Place of abode—Village, road or street.	Nationality.	Quality or occupation.
	A				
1	Andrew, D D ..	.. Jagatdal ..	.. Meghna Jute Mill ..	.. European	.. Manager, North Mill.
2	Ara, A G .	.. Manicktala ..	.. 15, Canal East Road ..	.. American	.. Manager, J C Galstaun, Esq.
3	Augier, C S ..	.. Chitpore ..	.. 13, Kali Prasanna Singh Road ..	Anglo-Indian	.. Manager, Bengal Hydraulic Press.
	B				
4	Baker, W H ..	.. Watgunge ..	.. 40, Ekbalpur Road ..	.. European	.. Assistant, Graham Co's Shipping Department.
5	Barnes, O J ..	.. Alipore ..	.. 1, Hastings Park ..	.. do ..	.. Service-holder, Hong Kong Bank.
	C				
6	Conway, C ..	.. Watgunge ..	.. 16, Pipe Road ..	.. Anglo-Indian	.. Foreman, P P Hydraulic Power House, Kidderpore.
7	Cooper, G ..	.. Dum-Dum ..	.. Dum-Dum, 24-Parganas	.. European	.. Manager, Gramophone Co.
	D				
8	Debri, B ..	.. Entally ..	.. 1, Canal Street ..	.. European	.. Assistant, R S N & Co.
9	Doranjo, C J ..	.. Dum-Dum ..	.. Military Works Bungalow No. 30 ..	Anglo-Indian	.. Accountant, C R E's Office Fort William.
	F				
10	Finlay, W ..	.. Budge-Budge	.. Kulipur, P O Achipur ..	.. European	.. Manager, Orient Jute Mill
	G				
11	Gahan, E C J ..	.. Garden Reach ..	.. 15, Garden Reach Road	.. European	.. Commercial Traffic Manager B N Ry.
12	Gay, H E	.. Entally ..	.. 14-1, Convent Road ..	.. Anglo-Indian	.. Assistant, Houghton & Sons.

	H				
13	Henderson, W M ..	.. Baranagore ..	.. Marshall Sons & Co. ..	.. European	.. Works Manager.
	I				
14	Instance, J A ..	.. Garden Reach ..	.. 61, Garden Reach Road	.. European	.. Carpenter, Garden Reach Workshop.
	J				
15	Johnson, T F ..	.. Bhowanipore ..	.. 4, Lee Road ..	.. European	.. Assistant, Merchant Office.
16	Jellicoe, J J ..	.. Entally ..	.. 14-1, Convent Road ..	.. Anglo-Indian	.. Engineer.
	K				
17	Kaddie, P ..	.. Tittagarh ..	.. Kinnison Jute Mill ..	.. European	.. Manager and Honorary Magistrate.
18	Kinnear, A R ..	.. Jagatdal ..	.. Jagatdal	.. do	.. Assistant Manager, Anglo-Indian Jute Mill, No 4
	L				
19	Lancaster, S Percy	.. Alipore ..	.. 1, Alipore Road ..	.. European	.. Secretary, Agricultural and Horticultural Society of India.
20	Laurie, W ..	.. Baranagore ..	.. Kamarhati Jute Mill " B "	.. do ..	.. Chief Engineer
21	Little, John ..	.. Jagatdal ..	.. Jagatdal	.. do ..	.. Manager, Anglo-Indian Jute Mill, No. 4.
22	Leslie, J H ..	.. Tittagarh ..	.. Tittagarh Mill, No. 1 ..	.. do ..	.. Assistant Manager, Titagarh Mill, No. 1.
23	Lewis, C C ..	.. Bhowanipore ..	.. 2, Canal Street ..	.. do ..	.. Assistant, Sanderson & Co.
	M				
24	Macnab, J K ..	.. Budge-Budge ..	.. Budge-Budge ..	.. European	.. Manager, Lothian Mill, Budge-Budge.
25	Mackenzie, E F ..	.. Baranagore ..	.. Kamarhati Jute Mill ..	.. do ..	.. Mill Manager and Honorary Magistrate.
26	Melvill, A ..	.. Garden Reach ..	.. 43, Garden Reach Road	.. do ..	.. Sale Master, Clive Jute Mills.

Serial No:	Name.	Thana.	Place of abode—Village, road or street.	Nationality.	Quanty or occupation
	L				
27	Martin, S A C ..	.. Garden Reach ..	.. 75, Garden Reach Road	.. European	.. Assistant Auditor, B N Ry.
28	Milne, R ..	.. Titagarh ..	.. Empire Jute Mill ..	.. do ..	.. Manager.
	N				
29	Nicholson, R ..	.. Titagarh ..	.. Kelvin Jute Mill ..	.. European	.. Manager.
	P				
30	Page, J J ..	.. Budge-Budge ..	.. Lothian Jute Mill ..	.. European	.. Engineer.
31	Paterson, H ..	.. Garden Reach ..	.. 43, Garden Reach Road	.. do ..	.. Office Master, Clive Jute Mills.
32	Petric, A ..	.. Jagatdal ..	.. Reliance Jute Mill ..	.. do ..	.. Engineer.
33	Rose, G F ..	.. Bhowanipore ..	.. 16, Lee Road ..	.. do ..	.. Merchant.
34	Reed-Kay, J ..	.. Alipore ..	.. 7, Alipore Park, North	.. do ..	.. ditto.
	S				
35	Simpson, T ..	.. Jagatdal ..	.. Reliance Jute Mill ..	.. European	.. Manager.
36	Sund, J R ..	.. Baranagore ..	.. Baranagore South Mill	.. do ..	.. ditto.
	T				
37	Taylor, W R ..	.. Entally ..	.. 15, Convent Road ..	.. Anglo-Indian	.. Retired Ry. Officer.
38	Thoms, A K ..	.. Jagatdal ..	.. Authpur	.. European	.. Manager, Alliance Jute Mill, Jagatdal.
39	Thomas, H N ..	.. Beliaghata ..	.. 42, Middle Road, Barrackpore	.. do ..	.. Sale Master, Surah Jute Mills.
40	Todrick, G A ..	.. Alipore ..	.. 1, Hastings Park ..	.. do ..	.. Merchant.
	W				
41	Welburn, Frank ..	.. Budge-Budge ..	.. Budge-Budge ..	.. European	.. Superintendent, Standard Oil Company, Budge-Budge.

	A						
42	Abdul Baseque (Dr)	Basirhat	Basirhat	Muhammadan	Landholder and Member, District Board.		
43	Abdul Gofur Siddique	Baduria	Kashpore	do	Landholder.		
44	Abdus Samad	Beliaghata	90, Narkeldanga North Road	do	Assistant, Finance Department, Secretariat Office.		
45	Addi, Panchanan	Mathurapore Alipore	Mathurapore Road, 8, Mayerpur Road	Hindu	Landholder and Merchant.		
46	Ahmed, Makbul, BA	Beliaghata	235B, Manicktala Main Road	Muhammadan	Head Master, Corporation Free Primary School.		
47	,, Shamsuddin	Beniapukur	19C, Cantopher's Lane	do	Merchant.		
48	,, Anisuddin	Dum-Dum	Gouripore	do	Vice-Chairman, North Dum-Dum Municipality.		
49	,, S A, Mr	Beniapukur	3, Noor Ali Lane	do	....		
50	Ali Mobarak (Khan Sahib)	Barrackpore	Government School, Barrackpore	do	Head Master.		
	B						
51	Ballabh, Debendra Nath, Rai Bahadur.	Chitpore	26-1, Galiff Street	Hindu	Zamindar.		
52	,, Gobinda Das	Beliaghata	157, Beliaghata Main Road	do	Clerk, Ralli Brothers.		
53	,, Harendra Nath	Basirhat	Dhynakuria	do	Zamindar.		
54	Bal, Sasi Bhusan	Habra	Goboordanga	do	Manager, Chototaraf Estate.		
55	Banerji, Ashutosh	Titagarh	Titagarh	do	Superintendent to the Estate of Sm. Promoda Debi.		
56	,, Bhaba Sankar	Barrackpore	Manirampur, P O Barrackpore	do	Manager of the *Bengalee*.		
57	,, Bhupati Lal	Mahestala	Mahestala	do	Zamindar.		
58	,, Bijoy Krishna, MA	Khardah	Panihati	do	Head Master, Panihati School.		

Serial No.	Name.	Thana.	Place of abode—Village, road or street.	Nationality.	Quality or occupation.
	B				
59	Banerji, Bijoy Krishna ..	Bhowanipore ..	.. 28/A, Balaram Bose, 1st Lane ..	Hindu ..	.. Press owner
60	„ Bepin Behari ..	Beliaghata ..	.. 14-1, Ram Mohan Roy Road ..	do ..	.. Clerk
61	„ Brajendra Kumar ..	Watgunj ..	.. 78, Diamond Harbour Road ..	do ..	.. Cloth Merchant.
62	„ Jogendra Nath, Rai Sahib.	Naihati ..	.. Banarjeepara, Naihati	do ..	.. Government Pensioner.
63	„ Kaliprasad ..	Khardah ..	.. Khardah	do ..	.. Professor, Bangabasi College.
64	„ Monomohan ..	Harowa ..	.. Minakhan Kutchuri	do ..	.. Superintendent, Port Canning & Co.
65	„ Naran Das ..	Beliaghata ..	.. 12, Biswas Nursery Lane ..	do ..	.. Engineer and Contractor.
66	„ Narayan Chandra ..	Khardah ..	.. Agarpara	do ..	.. Rice Merchant.
67	„ Prosad Chandra ..	Ballygunge ..	.. 26, Ritchie Road	do ..	.. Merchant.
68	„ Probodh Chandra ..	Barrackpore ..	.. Manirampur	do ..	.. Head' Clerk, General Traffic Manager's office, E I Railway, Howrah.
69	„ Rasamay ..	Bhowanipore ..	.. 146, Harish Mukherjee Road ..	do ..	.. Head Pundit, South Suburban School.
70	„ Rashik Chandar, BA	Kulpi ..	.. Moshamari	do ..	.. School Master.
71	„ Sarashi Krishna, BA, BL	Bhowanipore ..	.. 54, Sankaripara Road	do ..	.. Teacher, South Suburban School.
72	„ S K	Watgunge ..	.. 3, Puddapukur Square ..	do ..	.. Zamindar.
73	„ Satish Chandra ..	Baruipur ..	.. Kalyanpur, P O Baruipur ..	do ..	.. Zamindar, Honorary Magistrate and President, Panchayat
74	„ Srikumar ..	Tollygunge ..	.. 57, Lake Road	do ..	.. Educationist.

75	„	Surendra Chandra, MA	Beliaghata	..	..	30, Sastitola Road	..	..	do	.. .. Professor, Presidency College.
76	„	Surendra Nath, MA	.. Entally	..	..	14, Munshibazar Road		..	do	.. .. Professor, Ripon College.
77	Basu,	Anil Chandra, BSc	.. Alipore	..	..	3B, Jainuddin Mistry Lane		..	do	.. .. Teacher.
78	„	Bijay Krishna, BA	.. Magrahat	..	..	Dhamua		..	do	.. .. Teacher, Hadorai H E School, Baruipore
79	„	Braja Nath..	.. Beliaghata	..	..	12, Sitalatala Lane	..	..	do	.. .. Translator, Writers' Buildings.
80	„	Dhirendra Nath	.. Chitpore	..	..	72, Barrackpore Trunk Road		..	do	.. .. Zamindar.
81	„	Mr J M ..	.. Beliaghata	..	..	8, Garpar Road, Calcutta		..	do	.. .. Landholder and Honorary Magistrate
82	„	Jatindra Mohan	.. Baduria	..	..	Baduria		..	do	.. .. Honorary Magistrate.
83	„	Jogesh Chandra	.. Sonarpur	..	..	Rajpur		..	do	.. .. Chief Clerk, E B Ry, D T S office, Calcutta District, Sealdah.
84	„	Jogesh Chandra	.. Bhowanipore	..	..	7, Kundu Road	..	..	do	.. .. Assistant Collector, Calcutta Corporation.
85	„	Jogeswar ..	.. Titagarh	..	..	Bowbazar		..	do	.. .. Head Clerk, Kelvin Jute Mills.
86	„	Jyotish Chandra	.. Diamond Harbour		..	Kamarpole, P O Sarisa		..	do	.. .. Landholder.
87	„	Jyotish Chandra, MA	.. Bhowanipore	..	..	7, Kundu Road	..	..	do	.. .. Assistant Cashier, Central Bank.
88	„	Mahit Mohan	.. Ballygunj	..	..	8-1, Gareahat Road		..	do	.. .. Businessman.
89	„	Narendra Nath	.. Ditto	..	..	12, Ritchie Road		..	do	.. .. Contractor, P W D.
90	„	Pannalal ..	.. Beliaghata	..	..	258A, Upper Circular Road		..	do	.. .. Zamindar.
91	„	Pramatha Nath	.. Bhowanipore	..	..	8/1-C, Shamanand Road		..	do	.. .. Head Master, South Suburban School.

Serial No.	Name.	Thana.	Place of abode—Village, road or street.	Nationality.	Quality or occupation.
	B				
92	Basu, Sadhan Kumar ..	Diamond Harbour ..	Kalagachia, P O Sarisa ..	Hindu ..	.. Zamindar.
93	,, Sarat Chandra ..	Baduria / Beniapukur ..	.. Purna / 27, Linton Street ..	.. do ..	.. ditto
94	,, D K, B sc ..	Bhowanipore ..	.. 115, Harish Mukherji Road ..	do ..	.. Engineer.
95	,, Surendra Nath, BA ..	Budge-Budge ..	.. Sarangabad ..	.. do ..	.. Teacher, H E School, Saranga bad.
96	,, Tarun Chandra ..	Chitpore ..	.. Tala North Suburban School ..	do ..	.. Head Master, Tala North Suburban School.
97	,, Trailakshya Nath, BA ..	Khardah ..	.. Panihati	.. do ..	.. Officer-in-charge, Bengal Chemical and Pharmaceutical Works.
98	Bhattacharji, Bhudhar Chandra, MA	Barrackpore ..	.. Manirampore ..	.. do ..	.. Teacher, Debi Prosad H E School.
99	,, Dwijendra Nath	Baraset ..	.. Koyra	.. do ..	.. Landholder
100	,, Jogendra Nath, BA	Sonarpur ..	.. Rajpur	.. do ..	.. Clerk, General Department, Bengal Secretariat.
101	,, Jnanendra Nath, MA	Entally ..	.. 40C, Pottery Road ..	.. do ..	.. Teacher, Ripon Collegiate School.
102	,, Haripada, BA ..	Jagatdal ..	.. Bhatpara	.. do ..	.. Clerk.
103	,, Kalitosh ..	Naihati ..	.. Naihati ..	.. do ..	.. Landholder
104	,, Kamal Krishna, MA	Baruipur ..	.. Begumpore, P O South Garia ..	do ..	.. Professor
105	,, Monju Gopal, MA..	Naihati ..	.. Naihati	.. do ..	.. Professor, Presidency College, Calcutta
106	,, Narendra Nath	Habra ..	.. Nawpara	.. do ..	.. Clerk, Calcutta Corporation
107	,, Pramatha Nath	Bhowanipore ..	.. 15-1, Sankaripara Road ..	do ..	.. Assistant Head Master, Kalighat School
108	,, Sidheswar, BA .	Baranagar ..	.. Ariadah	.. do ..	.. Assistant Head Master

109	„	Shama Charan, Rai Bahadur	Naihati	..	..	Kantalpara	do ..	.. Vice-Chairman, Bhatpara Municipality
110	„	Sri Krishna Prasana, BA, Kabyatirtha	Haroa	..	..	Kholisadi 47, Mahim Haldar Street, Kalighat, Calcutta	do ..	.. Assistant Master, Hindu School, Calcutta.
111	„	Sudhir Nath, BA	Barrackpore	..	..	Ganti Manirampore, P O Barrackpore	do ..	.. School Master, Ripon Collegiate School.
112	„	Surendra Nath, BSc	Jagatdal	..	..	Bhatpara	do ..	.. School Master, Bhatpara School.
113	„	Upendra Nath ..	Behala	..	..	Behala Gosaipara	do ..	.. Deputy Chief Accountant, Calcutta Corporation.
114	Brahmachary, Priya Nath, BA		Sonarpur	..	..	Harinavi	do ..	.. Government pensioner.
115	Bhaduri, Upendra Nath ..		Cossipore	..	..	52, Barrackpore Trunk Road ..	do ..	.. Laboratory Assistant, Botany, Presidency College
	C							
116	Char, Susil Chandra, BA ..		Alipore	..	..	5, Gobinda Addy Road ..	Hindu ..	.. Teacher.
117	Chakrabartty, Indu Bhusan ..		Bhowanipore	..	..	107, Ashutosh Mukherjee Road ..	do ..	.. Zamindar.
118	„	Jatindra Jiban..	Diamond Harbour	..	..	Netra, P O Netra	do ..	.. School Master.
119	„	Jiban Gopal ..	Falta	..	..	Mallikpore, P O Falta ..	do ..	.. Landholder.
120	„	Hari Das ..	Falta	..	..	Santoshpur	do ..	.. ditto
121	„	Nilmani, MA ..	Sonarpur	..	..	Jagatdal	do ..	.. Professor, Presidency College.
122	„	Panchu Gopal ..	Baranagar	..	..	Bon Hooghly	do ..	.. Landholder and Chairman.
123	Chattarji, Atul Chandra ..		Behala	..	..	Behala Tincowri Cottage ..	do ..	.. Head Assistant, Central Stationary Office, Government of India, Calcutta. (Now on leave preparatory to retirement.)
124	„	Binod Bihari, BA ..	Tollygunge (BP)		..	Dhakuria village and P O ..	do ..	.. Municipal Commissioner

Serial No.	Name.	Thana.	Place of abode—Village, road or street.	Nationality.	Quality or occupation.
	C				
125	Chattarji, Benoy Krishna ..	Habra ..	.. Digra	Hindu ..	.. Landholder.
126	„ B M ..	Ballygunj ..	.. 96, Lansdowne Road ..	do ..	.. Businessman
127	„ Dharani Dhar ..	Behala ..	.. Pathakpara, Behala P O ..	do ..	.. Retired Accountant, Military Accounts Department.
128	„ M G	Beliaghata ..	.. 110, Narikeldanga Main Road ..	do ..	.. Jute Broker
129	„ Hari Charan ..	Watgunge ..	.. 71-1, Mansatala Lane	do ..	.. Clerk, B N Ry Office.
130	„ Hemendra Nath, MA	Burtalla ..	.. 114-A, Maniktalla Street ..	do ..	.. Clerk, Calcutta University.
131	„ Lalit Mohan ..	Bhowanipore ..	.. 17, Balaram Bose Ghat Road ..	do ..	.. Head Clerk, Andrew Yule & Co.
132	„ Mahadeb, MA ..	Baranagar ..	.. Sagar Dutta Free H E School, Kamarhati.	do ..	.. Head Master.
133	„ Manmatha Nath ..	Baraset ..	.. Nibadhui	do ..	.. Landholder.
134	„ Nibaran Chandra ..	Garden Reach ..	.. 75-4, Garden Reach Road ..	do ..	.. Head Record-keeper, Chief Engineer's Office, B N Ry.
135	„ Narendra Nath ..	Bhowanipore ..	.. 43A, Mahim Haldar's Street ..	do ..	.. Contractor.
136	„ Mrinal Chandra ..	Baranagar ..	.. Ariadah	do ..	.. Clerk, Khardah Jute Mill.
137	„ P L ..	Bhowanipore ..	.. 4, Gobinda Ghosal Lane ..	do ..	.. Honorary Magistrate, Alipore.
138	„ Phani Bhusan ..	do ..	.. 4, Harish Mukharji Road ..	do ..	.. Honorary Magistrate.
139	„ Prabodh Chandra, MA	Beliaghata ..	.. 27, Narikeldanga Main Road ..	do ..	.. Shop-keeper.
140	„ Rasamay ..	Bhowanipore ..	.. 114-2, Hazra Road	do ..	.. Professor, Ripon College.

141	„ Tarak Nath ..	Titagarh ..	..	Talpukur ..	..	do ..	..	Clerk, Military Accounts Office.
142	Chaudhuri, Kamal Chandra ..	Tollygunj ..	..	P 356, Russa Road ..	..	do ..	..	Zamindar.
143	„ Narain Chandra, BA.	Manicktala ..	..	57, Manicktala Main Road ..		do ..	..	Clerk, Bengal Secretariat, P W D.
144	„ Pratap Chandra ..	Beliaghata ..	..	85, Raja Rajendra Lal Mitra Road		do ..	..	Clerk.
145	„ Tara Nath ..	Naihati ..	..	Naihati ..	..	do ..	..	Rice Mill Overseer.
	D							
146	Das, Ajit Kumar	Entally ..	..	24, South Road ..	..	Hindu ..	..	Zamindar.
147	„ Bijoy Krishna ..	do ..	..	24B, South Road ..	..	do ..	..	ditto.
148	„ Benoy Krishna ..	do ..	..	24C, South Road ..	..	do ..	..	ditto.
149	„ Bhupendra Chandra ..	Bhowanipore ..	..	99B, Kalighat Road ..		do ..	..	Professor, Presidency College.
150	„ Jnanendra Nath, BA ..	Barrackpore ..	..	Sadar Bazar Gola Mehal		do ..	..	Teacher, Debi Prasad H E School.
151	„ Mr. J N	Beliaghata ..	..	57, Raja Dinendra Narain Street ..		do ..	..	Coal Merchant.
152	„ Sarat Kumar ..	Falta ..	..	Kantaldanga, P O Shaipore ..		do ..	..	Landholder.
153	„ Bhut Nath	Kulpi ..	..	Gabberia ..	..	do ..	..	Head Master, Gabberia H E School.
154	Dutta, Bidya Das ..	Joynagar ..	..	Mazilpur ..	..	do ..	..	Zamindar and Member, Sadar Local Board.
155	„ Mahendra Nath, MA ..	Rajarhat ..	..	Narayanpore ..	..	do ..	..	Assistant, Administrator-General's Office.
156	„ Manindra Narain ..	Jainagar ..	..	Majilpur ..	..	do ..	..	Zamindar.
157	„ Promode Kumar, ..	Watgunj ..	..	20, Monshatolla Lane ..	..	do ..	..	Clerk, Calcutta Corporation.

Serial No.	Name.	Thana.	Place of abode—Village, road or street.	Nationality.	Quality or occupation.
	D				
158	Dutta, Sarat Chandra, BE	Joynagar	Kuchelpara, Jainagar	Hindu	Head Master, J M Training School Joynagar.
159	„ Sudhir Krishna	ditto	Mazilpur	do	Zamindar.
160	Dey, Monindra Nath	Alipore	13-1, Joynuddin Mistry Lane	do	Engineer.
161	„ Netai Hari, BA	Habra	Khatora, P O Gobardanga ; at present 11B, Mohan Lal Street, Shambazar.	do	Shorthand Reporter.
162	„ Probodh Chandra, BA, BT	Beliaghata	Narikeldanga George High School	do	Head Master, Narikeldanga George High School.
163	„ Prafulla Chandra	Cossipore	1, Dum-Dum Road	do	Landholder.
164	„ Rajendra Nath	Baraset	Koyra	do	ditto.
165	„ Surendra Nath, BA	Cossipore	32, Ratan Babu's Ghat Road	do	Assessor, Cossipore-Chitpore Municipality.
166	Deb, Jnanendra Nath, BA	Joynagar	Mazilpur	do	Assistant Head Master, Joynagar Institution.
167	„ Rohini Kumar	Manicktala	56, Gouribari Lane	do	Manager, Bhowani Engineering and Trading Co.
168	„ Nirod Chandra	Mathurapore	Mathurapore	do	Landholder.
169	Dhar, Jogesh Chandra, MA	Diamond Harbour	Hatuganj	do	Head Master, Hatuganj H E School.
	G				
170	Ganguli, Rai Sahib Benode Behari	Khardah	Khardah	Hindu	Government Pensioner
171	„ Makhanlal (Rai Bahadur).	Ballygunj	3A, Clerk Street	do	Landlord

172	Jamini Prakash ..	Beniapukur ..	..	171, Lower Circular Road ..	do ..		Zamindar.
173	„ N B	Ballygunj ..	..	100, Lansdowne Road ..	do ..	..	Businessman.
174	„ N.	Tollygunge ..	..	P183, Ballygunge Avenue ..	do ..	..	Service-holder.
175	Gazi, Muhammad Shariatullah, BA.	Hasnabad ..	..	Kolutola, P O Hasnabad ..	Muhammadan	..	Landholder.
176	Goswami, Khirode Mohan, BA	Bhowanipore ..	..	43, Lansdown Road ..	.. Hindu ..	..	Manager, Zamindari Estate.
177	Ghosh, Abhoy Kali, MSC ..	ditto ..	..	90, Manicktala Main Road ..	do ..	..	Chemist, Bengal Chemical and Pharmaceutical Works.
178	„ Ambica Dass, MA ..	Titagarh ..	..	Barrackpore Government School ..	do ..	..	Assistant Master.
179	„ B C	Watgunge ..	..	14, Hem Ch. Street ..	.. do ..	..	Zamindar.
180	„ Banku Bihari, BA (Oxon), BSC (Cal.)	Khardah ..	..	Bandipur ..	.. do ..	..	Zamindar and Merchant.
181	„ Bishnu Das ..	Basirhat ..	..	Basirhat ..	.. do ..	..	Assistant Secretary, Central Bank, Taki.
182	„ Basanta Kumar, BA ..	Behala ..	..	Shahapore ..	.. do ..	..	Assistant, Accounts Department, Corporation of Calcutta, No 5, Corporation Street, Calcutta.
183	„ Bipin Bihari ..	Kulpi ..	..	Karanjali ..	.. do ..	..	Landholder.
184	„ Chandra Kumar ..	Beliaghata ..	..	10, Ram Mohan Roy Road ..	do ..	..	Building Surveyor, Calcutta Corporation.
185	„ Ganesh Chandra, BA	Tollygunj ..	..	23, Hazra Lane ..	.. do ..	..	Correspondence Agent, Howrah Flour Mills.
186	„ Hari Das, MA ..	Bhowanipore ..	..	29-3, Girish Mukherjee Road ..	do ..	..	Landlord.
187	„ Jagabandhu ..	Beliaghata ..	..	2, Gauri Sankar Ghosal Lane ..	do ..	..	Late Head Master, Seal's Free School.
188	„ Khetra Pal ..	Habra ..	..	Rajibpore ..	.. do	..	Landholder.
189	„ Nani Gopal, BA ..	ditto ..	..	ditto ..	.. do ..		Teacher, A V H E School.

Serial No.	Name.	Thana.	Place of abode—Village, road or street.	Nationality.	Quality or occupation.
	G				
190	Ghosh, Pramatha Nath, BA, BT	Tollygunge ..	.. Mohajanpatty, Tollygunge ..	Hindu ..	.. Teacher, Hare School.
191	„ Pulin Behari ..	ditto ..	.. Mollahat, P O Tollygunge ..	do ..	.. Contractor.
192	„ Surendra Nath ..	Jagatdal ..	.. Mulajore, P O Shamnagore ..	do ..	.. ditto.
193	„ Surendra Kumar ..	Maniktala ..	.. 70A, Maniktala Main Road ..	do ..	.. ditto.
194	Ghosal, Jogendranath ..	Baranagar ..	.. Ariadah	do ..	.. Retired clerk.
195	„ Nanilal, BA ..	Baruipore ..	.. Hariharpore	do ..	.. Head Master, Gobindapur High School.
196	„ Nripendranath ..	Beliaghata ..	.. 14-2-1, Bahir Mirzapur Road ..	do ..	.. Broker, Andrew Yule & Co.
197	„ Satya Mohan (Kumar)	Ekbalpur ..	.. 49-2, Circular Garden Reach Road, Bhukailas Garh:	do ..	.. Zamindar.
198	Guha, Rajendra Nath, BA ..	Bhowanipore ..	.. 18, Rammohan Dutta Road ..	do ..	.. License Inspector, Calcutta Corporation.
199	Gupta, Gopi Nath ..	Canning ..	.. Basanti Katcherry, P O Basanti, *via* Canning Town, 24-Parganas.	do ..	.. Superintendent, Mohes Chandra Land Improvement Katchery.
	H				
200	Hazra, Charu Chandra ..	Dum-Dum ..	.. Dum-Dum Cantonment ..	Hindu ..	.. Assistant Cashier, E B Ry, Sealdah.
201	Haldar, Hara Lal ..	Budge-Budge ..	.. Haldarpara, Budge-Budge ..	do ..	.. Chairman, Budge-Budge Municipality, and Landholder.
202	Haldar, Hara Mohan ..	Hasnabad ..	.. Dulduli	do ..	.. Head Master, Dulduli M E School.
203	„ N K	Barrackpore ..	.. Sadarbazar	do ..	.. Head Master, Debi Prosad H E School.
204	Hyder, Kamruddin ..	Beliaghata ..	.. 1, Kaiser Street ..	Muhammadan ..	.. Honorary Magistrate.

K

205	Kanjilal, Probodh Chandra, MA	Cossipore	..	28, Rutton Babu Road	..	Hindu	.. Head Master, Victoria H E School.
206	Kazi, Syed Golam Mohiuddin	Alipore	..	6, Mohesh Chandra Dutt Lane	..	Muhammadan	.. Head Assistant, Political Pension office, Alipore.
207	,, M. Md. Abdul Kader ..	Baraset	..	Kazipara	..	do	.. Employee in the office of the Controller of Currency, India, Calcutta.
208	,, M. Anwaral Huq ..	Baraset	..	ditto	..	do	.. P. W. D. office, Bengal Secretariat.
209	,, Nurul Huda ..	Titagarh	..	Anderson Road	..	do	.. Marriage Registrar.
210	Khan, Gool Muhammad ..	Beniapukur	..	11, Tiljala Road	..	do	.. Merchant and Zamindar.
211	Abdul Satter ..	Beliaghata	..	90, Narikeldanga North Road	..	do	.. Hide Merchant.
212	Kuar, Satish Chandra, BA ..	Bhowanipore	..	18, Iswar Ganguli Lane	..	Hindu	.. Zamindar.

M

213	Maitra, Girish Chandra ..	Basirhat	..	Mirzapur	..	Hindu	.. Landholder.
214	,, Kanti Chandra ..	ditto	..	ditto	..	do	.. ditto.
215	Mitra, Probodh Chandra ..	Cossipore	..	22, Gopal Chattarji Road	..	do	.. ditto.
216	Mitter, P C, Dr ..	Beliaghata	..	22A, Garpar Road	..	do	.. Professor, University College of Science.
217	Mallik, Panchu Gopal ..	Bizpore	..	Kanchrapara	..	do	.. Head Master, Harnet H E School.
218	Mandal, Bistu Charan ..	Behala	..	Becharam Chatterjee Road, Behala, P O		do	.. Second Master, Behala H E School.
219	,, Rash Behari ..	Deganga	..	Kalsoor, P O Kalsoor	..	do	.. Landholder and Honorary Magistrate, Baraset.

Serial No.	Name.	Thana.	Place of abode—Village, road or street.	Nationality.	Quality or occupation.
	M				
220	Maulvi Abdul Hafez, MA ..	Ballygunj ..	.. 38-1, Beltola Road ..	.. Muhammadan	.. Head Maulvi, Government H E School, Ballygunj.
221	„ Ershad Hossain, BA ..	Basirhat ..	.. Basirhat	.. do ..	.. Head Master, M L Jubilee Institution, Calcutta.
222	„ A F M Abdur Rahaman. ..	ditto ..	.. ditto	.. do ..	.. Zamindar and Honorary Magistrate.
223	„ A T M Moazzem ..	ditto ..	.. ditto	.. do ..	.. Honorary Magistrate.
224	„ Muhammad Musa ..	ditto ..	.. Neharpur P O Dhanyakuria	.. do ..	.. Vice-President, Dhanyakuria Union Board.
225	„ Muhammad Sufi ..	Maniktala ..	.. 20, Cullimuddy Lane ..	.. do ..	.. Teacher, Calcutta Madrasah.
226	„ Muhammad Khairul Bashar, BA.	Alipore / Bhowanipore ..	.. 10-A, Gopalnagar Road / 5, Kundu Road	.. do ..	.. Offg. Head Master, N M H E School.
227	„ Saiyid Mukshed Ali Malique, MLC.	Tittagar ..	.. Talpukur	.. do ..	.. Landholder and Municipal Commissioner.
228	„ Saiyid Mokarram Ali, BA, BT.	Basirhat ..	.. Basirhat	.. do ..	.. Sub-Inspector of Schools, Diamond Harbour.
229	Maschatak, Dhirendra Nath ..	Baraset ..	.. Kotra	.. Hindu ..	.. President, Kotra U B.
230	Mazumdar, Harendra Kumar	Hashnabad ..	.. Taki	.. do ..	Head Master, Taki Government H E School.
231	„ Haridas ..	Rajarhat ..	.. Narayanpore ..	.. do ..	.. Manager, Matilal Seal's Estate.
232	„ Haripada ..	Behala ..	.. Laskarpore ..	.. do ..	.. Clerk, Commercial Traffic Manager's Office, B N Ry, Kidderpore.
233	„ Sudhansu Bhusan	Sondeskhali ..	.. Goshaba	.. do ..	.. Manager, Goshaba Estate.
234	„ Nagendra Nath, BA.	Chitpur ..	.. 18, Barrackpore Trunk Road, P O Cossipur.	.. do ..	.. Head Master, Raja Manindra Memorial H E School, Paikpara.
235	„ Bijoychandra ..	Tollygunge ..	.. 35-2, Hindusthan Plot	.. do ..	.. Bengali novel writer and author.

236	„ Mriganka Kumar	Chitpore ..	.. 7, Kali Kumar Banerji Lane	.. do ..	.. Merchant.
237	„ Upendra Nath, BA	Dum-Dum ..	.. Kadihati, Dum-Dum	.. do ..	.. Head Master, Kadihati School.
238	Mirza, Ansar Ali	Jorabagan ..	.. 2, Gurudas Datta Garden Lane	.. Muhammadan	.. Port Trust Railway, Rathtala, Calcutta.
239	Mitra, Ashutosh, BA ..	Bijpur ..	.. Sarkarpara, Halishahar	.. Hindu ..	.. Head Master, Halishahar H E School.
240	„ Annada Prosad ..	Dum-Dum ..	.. Dun-Dum Cantonment	.. do ..	.. Assistant, Orr, Dignam & Co.
241	„ Harendra Nath ..	Basirhat ..	.. Pipa	.. do ..	.. Landholder.
242	„ Bhola Nath ..	Maniktala ..	.. 132, Bagmari Road ..	.. do ..	.. Cashier.
243	„ J C, Esq	Ballygunge ..	.. 14, Kankulia Road ..	.. do ..	.. Professor, Vidyasagar College.
244	„ Jnanendra Nath ..	Joynagar ..	.. Joynagar	.. do ..	.. Zamindar.
245	„ Mahim Chandra ..	Diamond Harbour	.. Bardrone, P O Hatuganj	.. do ..	.. School Master.
246	„ Panch Kowri ..	Naihati ..	.. Naihati	.. do ..	.. Honorary Magistrate.
247	„ Provat Kumar, BSC ..	Beliaghata ..	.. 11, Narkelbagan Lane ..	.. do ..	.. Landholder.
248	„ Pulin Behari, BSC. ..	Alipore ..	.. 15, Petambar Ghattak Lane	.. do ..	.. Chemist.
249	„ S C, MA	Dum-Dum ..	.. No 4, The Mall, Dum-Dum	.. do ..	.. Professor, Ripon College, Calcutta.
250	„ Surendra Nath ..	Joynagar ..	.. Joynagar	.. do ..	.. Landholder and Municipal Commissioner.
251	Mollah, Hossain	Metiabruz ..	.. Bartala ..	.. Muhammadan	.. Contractor, Whiteaway, Laidlaw & Co, Ltd.
252	Muhammad Azizuddin ..	Magrahat ..	.. Saligaria	.. do ..	.. Head Clerk, Calcutta Madrasah Wellesley Square.
253	„ Hassem ..	Beliaghata ..	.. 19, Beliaghata Main Road	.. do ..	.. Merchant and M L C.

Serial No.	Name.	Thana.	Place of abode—Village, road or street.	Nationality.	Quality or occupation.
	M				
254	Muhammad, Idris ..	Beliaghata ..	.. 23, Beliaghata Main Road ..	Muhammadan ..	Clerk, D T S office, Sealdah.
255	„ Noor, BA ..	ditto ..	.. 3, Gas Street	do ..	.. Ward Surveyor, Calcutta Corporation.
256	„ Yusuff ..	Garden Reach ..	.. 155, Paharpore Road	do ..	.. Clerk.
257	„ Yakub (Khan Sahib)	Barrackpore ..	.. 6, Aligole, Sudar Bazar ..	do ..	.. Late Supdt., High Commissioner's Office, Bagdad and Asstt. Supdt, Zoological Garden, Alipore.
258	Mukbul Ali, BA	Baduria ..	.. Arsula, P O Baduria	do ..	.. Holds service in Calcutta Corporation, Account Department, Section 3.
259	Maulvi Fazly Ahmed ..	Bhowanipore ..	.. 62, Sankaripara Road ..	do ..	.. Government Pensioner.
260	Mukharji, Amulya Chandra ..	Khardah ..	.. Titagarh	Hindu ..	.. Head Clerk, Titagarh Jute Factory No. 2.
261	„ Amulya Charan ..	Behala ..	.. Muradpur	do ..	.. Landholder.
262	„ Amar Nath ..	ditto ..	.. Brahmosamaj Road	do ..	.. Superintendent in the office of the C M A, P and A district, 6, Esplanade East, Calcutta.
263	„ Anil Nath ..	Entally ..	.. 15, Canal Street	do ..	.. Zamindar.
264	„ Asutosh, BA ..	Baraset ..	.. Baraset	do ..	.. Law Student.
265	„ Bikash Chandra ..	ditto ..	.. ditto	do	.. Service-holder, Calcutta Tramways.
266	„ Gobinda Chandra ..	Bhowanipore ..	.. 56, Kalighat Road	do ..	.. Engineer, Calcutta Corporation
267	„ Girindra Nath ..	Beliaghata ..	.. 78 & 79, Charakdanga Road ..	do ..	.. Coal Merchant
268	„ Girindra Nath ..	Bhowanipore ..	.. 25, Haldarpara Road	do ..	.. Zamindar.

269	,,	Jatindra Nath ..	Basirhat ..	..	Bhabla ..	..	..	do ..	..	Retired Sub-Registrar.
270	,,	Khitiprasanna, BA..	Habra ..	..	Gobardanga ..	..	..	do ..	..	Zamindar.
271	,,	Kishori Mohan ..	Behala ..	..	Gabtala ..	..	..	do ..	..	Government Pensioner and working as an Accountant and Cashier, Calcutta Club, No. 241, Lower Circular Road, Calcutta.
272	,,	Kristo Chandra ..	Bhowanipore ..	..	269, Kalighat Road ..	..	..	do ..	..	2nd Clerk, Survey Department, Calcutta Corporation.
273	,,	Krishna Dhan ..	Maheshtala ..	..	Gangipur, P O Maheshtala ..		..	do ..	..	Landholder and Pensioner.
274	,,	Manmatha Nath ..	Maniktala ..	..	173, Raja Dinendra Street ..		..	do ..	..	Engineer and Contractor.
275	,,	Ray Bahadur Nani Lal.	Ballygunge ..	..	1, Love Lock Street ..	..	..	do ..	..	Manager, Jail Depot.
276	,,	Nirode Chandra, BA	Naihati ..	..	Kantalpara.. ..	..	..	do ..	..	School Master, Bhatpara School.
277	,,	Prio Nath ..	Khardah ..	..	Khardah	..	..	do ..	..	Government Pensioner and Honorary Magistrate.
278	,,	Purna Chandra, BL	Bhowanipore ..	..	28, Mohim Haldar Street ..		..	do ..	..	Working as Manager, Zamindary Estate.
279	,,	Surendra Nath, BA	Baruipur ..	..	Baruipur	..	..	do ..	..	Head Master, Baruipur H E School.
280	,,	Titu Lal ..	Baranagar ..	..	Joy Narayan Banerji Lane ..		..	do ..	..	Landholder.
281	,,	Upendra Lal ..	Bhowanipore ..	..	8, Rupnarayan Nandan Lane ..		..	do ..	..	Engineering Supervisor, Dist. No. I, Calcutta Corporation.
282	Maulvi, Mulluk Hossain, BA, BT	..	Hasnabad ..	..	Taki	..	..	Muhammadan	..	Teacher, Taki Government School.
283	,,	Bazlar Rahman ..	Bhowanipore ..	..	8-1, Sankaripara Road ..		..	do ..	..	Landholder.
284	,,	Bazlar Rahman, BA ..	Hasnabad ..	..	Kolutola, P O Hasnabad ..		..	do ..	..	ditto.
285	,,	Mozaffar Ahmed ..	ditto ..	..	Taki	..	..	do ..	..	Head Maulvi, Taki Government School.

Serial No.	Name.	Thana.	Place of abode—Village, road or street.	Nationality.	Quality or occupation.
	N				
286	Nag, Rakhal Chandra ..	Naihati ..	.. Kantalpara..	Hindu ..	.. Head Master, Naihati H E School.
287	Naskar, Hem Chandra ..	Beliaghata ..	.. 72, Beliaghata Main Road ..	do ..	.. Zamindar, Hony. Magistrate and Councillor, Calcutta Corporation.
288	Nandi, Atul Krishna, BL ..	Beliaghata ..	.. 99C, Garpar Road (School address) 99A, Ditto (Residence).	do ..	.. Rector, Athenæum Institute.
289	Neogi, Kali Krishna ..	Matiabruz ..	.. Mudiali	do ..	.. Assistant Auditor, Garden Reach Workshop.
290	Neya, Sushil Chandra, BA, BL	Mathurapur ..	.. Mathurapur	do ..	.. Head Master.
	P				
291	Pain, Nilmani, BL ..	Manicktala ..	.. 13, Simla Road	Bengali Christian ..	Trader in lace.
292	,, Tincowrie Lal ..	Alipore ..	.. 6, Mayerpore Lane, Chetla ..	Hindu ..	.. Head Clerk, Asbestos & Belting Company.
293	Pal, Abinash Chandra ..	Metiabruz ..	.. Mudiali, P O Garden Reach ..	do ..	.. Assistant Auditor, B-N Railway.
294	,, Amal Chandra (Rai Sahib)	Barrackpore ..	.. Government Park, Barrackpore ..	do ..	.. Park Superintendent and Honorary Magistrate, Barrackpore.
295	,, Ashutosh, MA ..	Tollygunge ..	.. Kasba	do ..	.. Professor.
296	,, Dhruba Nath ..	Manicktala ..	.. 53, Badridas Temple Street ..	do ..	.. Manager of a rice mill.
297	,, Jitendra	Entally ..	.. 4, Shambhu Babu Lane ..	do ..	.. Landlord.
298	,, Probat Chandra, BA ..	Garden Reach, Calcutta	.. Mudiali Road	do ..	.. Assistant, Remington Typewriter Co (India), Ltd.
299	,, Nagendra Nath, MA ..	Basirhat ..	.. Basirhat	do ..	.. Head Master, Basirhat H E School.
300	,, Rajendra Nath, BA ..	Metiabruz ..	.. Mudiali	do ..	.. Head Master, Turner Morrison H E School.

301	Panday, Sarat Chandra	Bhangore	Bodra	do		Teacher, Bodra H E School
302	Palit, Bhupati Nath, MA, BT	Barrackpore	Government High School, Barrackpore.	do		Assistant teacher.
303	Pramanik, Bata Kristo	Bhowanipore	57-1, Lansdowne Road	do		Zamindar.
304	Purkait, Girish Chandra, BA	Mathurarpur	Basudebpur, P O Mathurarpur	do		School Master.
	R					
305	Rahaman, Abdur	Beliaghata	106, Narkeldanga Main Road	Muhammadan		Supervisor, Gordon & Co.
306	Ray, Bibhudan, BA, BT	Bhowanipore	32, Chandra Nath Chatterjee Street, Bhowanipore, Calcutta.	Christian		David Hare Training College, Ballygunge, Calcutta.
307	„ Bibhuti Bhusan	Bhowanipore	Bakulbagan Road	Hindu		Superintendent, Mitra Institution, Bhowanipore.
308	„ Bhupendranath	Behala	Behala	do		Zamindar and Hardware and General Merchant, Behala.
309	„ Bhusan Chandra	Bhowanipore	41, Sankaripara Road	do		Reader, Govt. of India Press, Calcutta.
310	„ Narendra Nath, MA	Naihati	Naihati	do		Principal, Ripon College.
311	„ Nirode Kumar	Ballygunge	9, Old Ballygunge Road	do		Zamindar.
312	„ Saurindra Nath, MA	Behala	Behala	do		Government Pensioner and Zamindar.
313	Ray Chaudhuri, Ashutosh	Bhangar	Budro	do		Landholder.
314	„ „ Ganendra Nath.	Cossipore	37, Cossipore Road	do		Zamindar.
315	Roy Harendra Nath Choudhury.	Baranagar	Mathura Nath Chaudhury Lane, Baranagar.	do		Landholder.
316	Roy Choudhury, Khirode Chandra.	Behala	Barisa	do		Head Master, Barisa H E School.
317	„ „ Nirmal Kumar.	Hasnabad	Taki	do		Zamindar.

Serial No.	Name.	Thana.	Place of abode—Village, road or street.	Nationality.	Quality or occupation.
	R				
318	Roy Choudhury, Tara Das ..	Bhowanipore ..	.. 56, Padmapukur Road ..	Hindu ..	.. Manager, Bhowanipore Banking Corporation, Ltd.
319	„ „ Provash Chandra, BSC.	Sonarpur ..	.. Rajpur	do ..	.. Demonstrator, City College.
320	Routh, Purna Chandra ..	Sagar ..	.. Banstola, P O Murigonga ..	do ..	.. Naib of the lessee.
	S				
321	Sardar, Panchanan ..	Kulpi ..	.. Kumar Chak	do ..	.. Head Master, Kulpi M E School.
322	„ Khoda Bux ..	Hashnabad ..	.. Bhabia	Muhammadan ..	School Master.
323	Sarkar, Bidhu Bhusan ..	Beliaghata ..	.. 69, Beliaghata Main Road ..	Hindu ..	.. Zamindar and Municipal Commissioner.
324	„ Harendra Krishna Deb	Falta ..	.. Mala, P O Falta	do ..	.. Landholder.
325	„ Krishna Charan ..	Budge-Budge ..	.. Shampur	do ..	.. Common Manager, Sarkar's Estate, Shampur, and Assistant Secretary, P K H E School, Budge-Budge.
326	„ Sham Lal ..	Tollygunj (C P)	49/9 Mudiali P O Tollygunj ..	do ..	.. Sub-Editor of the "Capital".
327	Shaikh Abdul Majid ..	Ekbalpore ..	.. 5-5, Ekbalpore Lane ..	Muhammadan	.. Clerk, Alipore Central Jail Office.
328	„ Abdus Sattar ..	Maniktala ..	.. 95B, Belgachia Road	do	.. Head Master, Calcutta Free Primary School.
329	„ Hormuj Ali, BA ..	Kulpi ..	.. Kalitola	do	.. Landholder.
330	Shaw, Monoranjan, BA ..	Bistupur ..	.. Bistupur	Christian	.. Assistant Teacher, Bistupur Mission School.
331	Shaha, Gnanendra Nath ..	Bhowanipur ..	.. 114/2 Hazra Road	Hindu	.. Clerk, Corporation office.
332	Shahebzada Md. Fraidon Shekoh.	Tollygunge ..	.. 25, Prince Anwar Shah Road, Tollygunge, 24 Parganas.	Muhammadan	.. Independent gentleman.
333	Sawoo, Sarat Chandra ..	Basirhat ..	.. Dhankuria	Hindu ..	.. Zamindar.

334	Sastri, Ashutosh, MA	..	Joynagore	..	..	Dakhin Barasat	..	.. do .. .. Government Pensioner.
335	Sen, S. C.	..	Ballygunj	..	..	42-1, Ritchie Road	..	.. do .. .. Landlord.
336	„ Birendra Nath	..	Baraset	..	..	Baraset	..	.. do .. .. Head Master, Baraset Government School.
337	„ Kumud Nath	..	Hasnabad	..	..	Taki	..	.. do .. .. Assistant Head Master, Taki Government School.
338	„ Dr. Nikhil Ranjan	..	Ballygunge	..	..	2, Ritchie Road	..	.. do .. .. Professor, Science College.
339	„ A. C.	..	Tollygunj	..	..	P 400, Russa Road	..	.. do .. .. Engineer.
340	Sen Gupta, Monoranjan BA, BT		Entally	..	..	3, Palmerbazar Road	..	.. do .. .. Teacher, Christ Church School.
341	Sen, Subodh Chandra, MA	..	Bhowanipore	..	..	12-1, Kalidas Patitundi Lane	..	.. do .. .. Professor, Presidency College.
342	Siromoni, Brojendra Lal, MA, BL.		Nawpara	..	..	Ichapore Park	..	.. do .. .. Assistant to Employment Manager, Ichapore Factory.
343	Sinha, Amrita Lal	..	Basirhat	..	..	Basirhat	..	.. do .. .. Deputy Inspector of Schools.
344	„ Jogendra Nath	..	Beliaghata	..	..	82A, Charakdanga Road	..	.. do .. .. Merchant.
345	„ Narendra Nath	..	ditto	..	..	82C, ditto	..	.. do .. .. ditto.
346	„ Pulin Krishna, BA	..	Nawpara	..	..	Ichapore Park	...	.. do .. .. Assistant Cashier, Ichapore Rifle Factory.
347	Some, Ram Gopal, B SC	..	Chitpur	..	..	32-1, Khelat Babu's Lane	..	.. do .. .. Head Master, Ariadah H E School.
348	Sur, Amulya Charan	..	Cossipore	..	..	100, South Sinthee Road	..	.. do .. .. Contractor.
349	„ Sarat Chandra	..	Khardah	..	..	Patulia Bandipur	..	.. do .. .. Government Pensioner.
	U							
350	Upadhyaya, Benode Behari	..	Baraset	..	..	Choto Jagulia	..	.. Hindu .. .. Clerk, Grand Hotel, Calcutta.

24-PARGANAS COLLECTORATE,
The 7th July 1931.

K. MOOKERJI,
Additional Collector, 24-Parganas.

Registered No. C207

No. 29 of 1931

The Calcutta Gazette

THURSDAY, JULY 16, 1931.

CONTENTS:

	PAGE.
Statement under the Cotton Ginning and Pressing Factories Act, 1925 ..	919
Vital Statistics for the towns of Bengal for the weeks ending 27th June and 4th July 1931	920—921
Area leased for irrigation up to end of April 1931	922
Weather and Crop Report for the week ending 8th July 1931	923—926
Prices-current (wholesale) of certain articles in the Calcutta Mart and (retail) of common rice and salt in the districts of Bengal for the second-half of June 1931	927—930
Statement showing the daily gauge-readings of certain rivers for the week ending 2nd July 1931	931—937
Calcutta Improvement Trust Notice ...	938
Statements of weekly gauge readings of certain rivers in Bengal	939—940
Preliminary Forecast of the Jute Crop, 1931	941—951

Supplement.

Official Papers.

FORM C—BENGAL.

STATEMENT OF COTTON PRESSED IN THE BENGAL PRESIDENCY FOR THE WEEK ENDING 3rd JULY 1931.

[Section 5 (2) of the Cotton Ginning and Pressing Factories Act, 1925.]

Name of Division or block.	Number of bales pressed.				District included in the block.
	During the week.	During the corresponding week, last year.	Since 1st September 1930 (the date prescribed by the Local Government as the commencement of the season).	During the corresponding period, last year.	
The Bengal Presidency	870 or 864·98 bales of 400 lbs. each.	634	29,750	29,705	All districts in the Presidency.

J. B. McBRIDE,
Chief Inspector of Factories, Bengal (offg.).

Vital statistics of towns with a population of 50,000 and over of the Bengal Presidency for the week ending Saturday, the 27th June 1931.

District.	No.	Towns.	Population under registration according to Census of 1921.			Births registered.		Deaths registered.																							
			Male.	Female.	Total.	Number registered (excluding still-births).	Still-births registered.	Cholera.	Small-pox.	Plague.	Malaria.	Enteric fever.	Measles.	Relapsing fever.	Kala-azar.	Other fevers.	Dysentery.	Diarrhœa.	Influenza.	Pneumonia.	Phthisis.	Other respiratory diseases.	Injuries including suicide.	Deaths from child-birth.	Other causes.	Total of all causes.			Total of corresponding week of the previous year.		
																									Male.	Female.	Total.	Male.	Female.	Total.
Calcutta ..	1	Calcutta ..	724,248	353,016	1,077,264	484	21	38	1	..	8	12	1	..	2	50	15	10	21	54	46	86	17	..	221	322	260	582	360	226	586
Burdwan ..	2	Asansol Mining Settlement.	176,814	152,539	329,353	213	2	..	..	..	1	..	..	..	..	43	9	..	..	14	3	3	2	4	58	68	69	137	44	38	82
Howrah ..	3	Howrah ..	128,472	66,829	195,301	93	2	7	1	..	2	3	..	..	..	4	8	7	..	19	5	12	2	..	24	52	42	94	49	46	95
Dacca ..	4	Dacca ..	67,333	52,117	119,450	39	..	2	..	..	..	2	..	..	1	6	6	..	..	7	2	12	1	..	14	32	21	53	29	19	48
24-Parganas	5	Bhatpara ..	45,723	19,886	65,609	21	..	1	2	..	..	..	..	..	..	9	..	1	1	4	1	1	..	..	2	11	11	22	11	10	21
	6	Titagarh ..	36,533	15,918	52,451	14	..	..	..	..	..	..	..	..	..	11	..	1	..	..	..	..	1	..	1	9	5	14	4	4	8

R. B. KHAMBATA, M.R.C.S. (ENG.), L.R.C.P. (LOND.), D.P.H. (CAMB.), *Director of Public Health, Bengal (offg.).*

CALCUTTA, *the 6th July 1931.*

Vital statistics of towns with a population of 50,000 and over of the Bengal Presidency for the week ending Saturday, the 4th July 1931.

District.	No.	Towns	Population under registration according to Census of 1921			Births registered.		Deaths registered.																							
			Male	Female.	Total.	Number registered (excluding still-births)	Still-births registered	Cholera.	Small-pox	Plague	Malaria	Enteric fever.	Measles	Relapsing fever.	Kala-azar.	Other fevers	Dysentery.	Diarrhœa	Influenza	Pneumonia.	Phthisis	Other respiratory diseases	Injuries including suicide	Deaths from child-birth.	Other causes.	Total of all causes.			Total of corresponding week of the previous year.		
																									Male	Female.	Total	Male	Female.	Total.
Calcutta ..	1	Calcutta ..	724,248	353,016	1,077,264	314	32	35	9	..	13	17	2	..	5	28	25	9	10	34	66	8	14	1	200	298	252	550	298	217	515
Burdwan ..	2	Asansol Mining Settlement.	176,814	152,539	329,353	254	2	4	..	..	..	..	1		..	31	5	..	..	15	..	6	1	1	52	58	58	116	50	49	99
Howrah ..	3	Howrah ..	128,472	66,829	195,301	76	6	3	4	..	..	5	..		..	5	11	12	..	20	5	18	3	2	27	64	51	115	57	47	104
Dacca ..	4	Dacca	67,333	52,117	119,450	60	2	2	..	..	..	..	1	..	2	2	7	3	1	11	2	7	.	1	15	31	23	54	24	19	43
24-Parganas	5	Bhatpara .	45,723	19,886	65,609	21	..	3	..	..	.	..	1	.	..	15	2	1	..	1	..	2	.	..	4	15	14	29	5	5	10
	6	Titagarh ..	36,533	15,918	52,451	9	..	..	..	.	..	..	..	..	..	7	..	1	..	..	..	..	..	..	..	5	3	8	6	3	9

R. B. KHAMBATA, M.R.C.S. (Eng.), L.R.C.P. (Lond.), D.P.H. (Camb.), *Director of Public Health, Bengal (offg.).*

CALCUTTA, *the 11th July 1931.*

IRRIGATION DEPARTMENT, BENGAL.

Irrigation operations for the official year 1931-32.

Area leased for irrigation up to end of April 1931.

Circle.	District	Canal.	Estimated full discharge.	Average discharge in month.	Discharge utilised.	Approximate area of land irrigated during the year up to the end of the month.	Approximate area of land under irrigation up to the same date last year.	Details of areas leased.						Rainfall, 1931-32.		Rainfall, 1930-31.	
								Long term leases.	Season leases.								
									Kharif.	Rabi.	Sugarcane.	Hot weather.	Total.	Grand Total.	During month.	Up to end of month.	During month.	Up to end of month.
			C. ft.	C. ft.	C. ft.	Acres.	Acres.	Acres.	Acres.	Acres.	Acres.	Acres.	Acres.	Acres.	Inches.	Inches.	Inches.	Inches.
South-Western.	Midnapore	Midnapore	1,411	..	..	..	..	37,025	..	..	..	..	..	37,025	0·77	0·77	0·62	0·62
		Panskura	522	..	..	..	..	776	..	..	..	..	..	776	0·79	0·79	2·64	3·19
	Howrah ..	Tidal Reaches, Ranges I and II	..	..	..	..	..	..	..	..	..	..	..	..	1·67	1·67	2·62	2·62
		Total Midnapore Canal ..	..	..	..	..	..	37,801	..	..	..	..	..	37,801	..	..	..	..
		Total of the corresponding period, last year ..	..	..	..	..	..	47,222	1,900	..	..	..	1,900	49,122	..	..	..	..
	Burdwan and Hooghly.	Eden Canal	..	..	..	..	..	13,894	..	..	..	..	..	13,894	1·43	1·43	1·54	1·54
		Total of the corresponding period, last year ..	..	..	..	..	..	17,800	..	..	..	..	..	17,800	..	..	..	..
		GRAND TOTAL ..	..	..	..	..	..	51,695	..	..	..	..	..	51,695	..	..	..	..
		GRAND TOTAL OF THE CORRESPONDING PERIOD OF LAST YEAR ..	..	..	..	..	..	65,022	1,900	..	..	..	..	65,022	..	..	..	..

CALCUTTA, *the 9th July 1931.*

B. L. SUBARWAL,
Personal Assistant to the Chief Engineer to the Government of Bengal.

DISTRICT REPORTS ON WEATHER AND CROPS.

For the week ending on the 8th July 1931.

Summary.—During the week under report seasonable rain fell throughout the Province The fall was rather heavy in the districts of Chittagong and Chittagong Hill Tracts. The effects of the weather on the standing crops are reported to be on the whole favourable Weeding of jute and o her autumn crops is nearly finished. Autumn paddy is being harvested on the low lands of East and North Bengal. Transplantation of winter paddy seedlings is in progress. Distress continues in parts of Nadia, Murshidabad, Rangpur, Bogra and Pabna districts, the number of persons attending the test relief works in different centres of these districts being 2,657, 625, 427, 192 and 2,839, respectively. The number of persons gratuitously relieved at Rangpur and Bogra was 10 and 71, respectively. At Bogra the situation has considerably improved with the harvesting of autumn paddy. The average price of common rice for the Province has fallen by 0·66 per cent. as compared with that of the previous week.

Serial No.	District and subdivision.	Rainfall.	Price of common rice, in seers, per rupee.		Character of the weather, condition of crops, etc.
			This week	Previous week.	
1	2	3	4	5	6
		Inches.			
1	24-Parganas ..	8·08	9½	10	Weather seasonable. Fodder and water are sufficient. Transplantation of *aman* paddy has commenced in Sadar subdivision.
	Diamond Harbour.	4·83	10½	10½	
	Barrackpore ..	7·47	8½	9	
	Baraset ..	6·15	9	9	
	Basirhat ..	2·85	9	9	
2	Nadia ..	2·52	9½	9½	Weather seasonable. Prospects of standing crops are good Distribution of a further sum of Rs. 25,000 as an agricultural loans is in progress. 2,657 persons attended test works in seven centres during the week ending on the 4th July. Cattle-disease is reported from Gangani thana.
	Kushtia ..	1·45	10	10	
	Meherpur ..	4·08	8 13/16	8 13/16	
	Chuadanga ..	3·45	10	9½	
	Ranaghat ..	2·22	10	10	
3	Murshidabad ..	3·40	11	11	Weather seasonable. Prospects of crops are fair. Fodder and water are sufficient. 625 persons attended test works on the 7th July in Jellingi thana The number is daily increasing
	Lalbagh ..	3·00	10	10	
	Jangipur ..	1·73	11	11½	
	Kandi ..	1·49	12	12	
4	Jessore ..	2·94	9	9	Weather seasonable. Sowing of jute and *aus* paddy is over. Fodder and water are sufficient.
	Jhenidah ..	2·58	9	9	
	Magura ..	2·20	9	9	
	Narail ..	4·30	10	10	
	Bongaon ..	3·03	9½	8	
5	Khulna ..	4·49	10½	10½	Weather seasonable ; its effects on crops are fair. Fodder and water are sufficient. Export and import of rice continue slowly. Cattle-disease is reported from Kaliganj, Asasuni and Morelganj thanas.
	Satkhira ..	5·32	9⅞	9⅞	
	Bagerhat ..	3·48	8½	8½	

Serial No.	District and subdivision.	Rainfall.	Price of common rice, in seers, per rupee.		Character of the weather, condition of crops, etc.
			This week.	Previous week.	
1	2	3	4	5	6
		Inches.			
6	Burdwan ..	3·02	10	11	Weather seasonable. Fodder and water are sufficient.
	Asansol ..	9·81	9	9	
	Katwa ..	1·13	12	12	
	Kalna ..	4·11	11½	11½	
7	Birbhum ..	4·44	12½	13	Weather cloudy. Cattle-disease is reported from Murarai thana. Fodder and water are sufficient.
	Rampurhat ..	3·40	12½	12½	
8	Bankura ..	0·89	10 9/16	10½	Weather seasonable. Prospects of standing crops are fair. Fodder and water are sufficient.
	Vishnupur ..	3·41	11½	11½	
9	Midnapore ..	2·99	13 5/16	13½	Weather seasonable. Fodder and water are sufficient. Cattle-disease is reported from Kharagpur
	Contai ..	5·56	11	12	
	Tamluk ..	4·10	10	10	
	Ghatal ..	4·27	12½	12½	
	Jhargram ..	2·72	11¾	11¾	
10	Hooghly ..	3·30	10	11	Weather seasonable. Transplantation of *aman* paddy has commenced. Jute plants are thriving. Fodder is sufficient.
	Serampore ..	8·92	9¾	9¾	
	Arambagh ..	3·06	12½	(a)	
11	Howrah ..	8·12	8	8	Weather seasonable; its effects on agricultural operations and to standing crops are favourable. No large import or export. Fodder and water are sufficient.
	Uluberia ..	5·06	10¾	10¾	
12	Rajshahi (Rampur-Boalia).	(a)	10½	9¾	Prospects of standing crops are fair. Weeding of jute and *aus* crops is nearly finished in Naogaon subdivision. Fodder and water are sufficient.
	Naogaon ..	1·84	12	10¾	
	Nator ..	3·65	9 15/16	9¾	
13	Dinajpur ..	0·47	10½	10	Weather seasonable; its effects on agricultural operations are favourable. More rain is wanted. Prospects of standing crops are fair Fodder and water are sufficient.
	Thakurgaon ..	1·38	12	11	
	Balurghat ..	2·76	12	12	
14	Jalpaiguri ..	5·38	7	7	Prospects of standing crops are not favourable. Transplantation of *haimanti* paddy is in progress. Fodder and water are sufficient.
	Alipur ..	4·40	7	7	
15	Darjeeling ..	7·16	7	7	Potatoes and maize are being harvested. Fodder and water are sufficient. Cattle-disease exists at places. Transplantation of marwa and paddy is going on.
	Kurseong ..	4·23	7	7	
	Siliguri ..	4·06	10	9	
	Kalimpong ..	3·64	8	8	

(a) Not reported.

Serial No.	District and subdivision.	Rainfall.	Price of common rice, in seers, per rupee.		Character of the weather, condition of crops, etc.
			This week.	Previous week.	
1	2	3	4	5	6
		Inches.			
16	Rangpur .	4·27	9	9	Weather cloudy. Prospects of standing crops are fair. Fodder and water are sufficient. 427 persons attended the test relief works. Number of persons receiving gratuitous relief was 10.
	Nilphamari ..	0·36	10½	10½	
	Kurigram ..	5·12	10 11/16	10 11/16	
	Gaibandha ..	1·81	10	10	
17	Bogra ..	1·42	11½	11½	Condition of standing crops is satisfactory. Situation has improved considerably as *aus* crop is being harvested. Test relief works are going on in affected parts. Number of persons attending the test relief works amounts to 192. Number of persons gratuitously relieved is 71.
18	Pabna ..	0·73	9½	9½	Export and import are normal. Condition of cattle is well. Fodder and water are sufficient. Prospects of standing crops and jute are fair. 2,839 persons attended the test relief works during the week ending 4th July 1931. Total amount paid up to date Rs. 27,896-9-9 only.
	Sirajganj ..	1·46	10	10	
19	Malda ..	1·25	10½	10½	Weather seasonable. Prospects of standing crops are fair. Fodder and water are sufficient.
20	Cooch Behar ..	0·84	11 7/16	11 7/16	Weather cloudy with occasional rain. Transplantation of *haimanti* seedlings and harvesting of autumn paddy are progressing. Prospects of standing crops are fair. Fodder and water are sufficient.
21	Dacca ..	1·81	8½	8½	Rainfall at North Sadar (Kapasia) 0·55. Weather seasonable. Condition of jute and other standing crops is fair. Harvesting of *aus* paddy is going on. Fodder and water are sufficient.
	Manikganj .	1·28	9½	9¾	
	Narayanganj	0·74	9	9	
	Munshiganj ..	0·32	10	9	
22	Mymensingh ..	0·96	9	9	Weather seasonable. Some damage to jute and *aus* paddy crops in Netrakona and Kishoreganj and that to less extent in Sadar are reported. Prospects of standing crops are fair. Fodder and water are adequate.
	Jamalpur ..	2·07	10	9	
	Tangail ..	1·25	9	9	
	Netrakona ..	2·04	10	8	
	Kishorganj ..	1·66	10	9 3/16	

Serial No.	District and subdivision.	Rainfall.	Price of common rice, in seers, per rupee.		Character of the weather, condition of crops, etc
			This week.	Previous week.	
1	2	3	4	5	6
		Inches.			
23	Faridpur ..	1·44	9½	9½	Weather seasonable and favourable. Prospects of standing crops are fair. No large import or export. Fodder and water are sufficient.
	Goalundo (Rajbari).	1·59	9	9	
	Madaripur ..	3·22	9½	10	
	Gopalganj (*a*)	3·69	8½	8½	
24	Bakarganj (Barisal).	3·48	9	9	Weather seasonable. Fodder and water are sufficient. Prospects of standing crops are good.
	Pirojpur ..	4·05	9½	9½	
	Patuakhali ..	8·25	10	10	
	Dakshin Shahazpur (Bhola).	2·84	9½	9½	
25	Chittagong ..	15·05	10 11*	10 11*	Weather seasonable. Prospects of standing *aus* crops fair Fodder and water are sufficient. *Panga* salt sells at 16 seers per rupee at Sadar and at 13 seers per rupee at Cox's Bazar.
	Cox's Bazar ..	17·28	9	10	
26	Tippera (Comilla).	4·22	10	9⅞	Prospects of standing crops are favourable.
	Brahmanbaria	1·94	10	10	
	Chandpur ..	2·69	10	10	
27	Noakhali ..	3·36	10	10½	Weather seasonable. Fodder and water are sufficient.
	Feni ..	4·89	9	9	
28	Chittagong Hill Tracts.	9·82	13	13	Weather rainy.
29	Tripura State ..	4·40	9½	9⅝	Weather seasonable Fodder and water are sufficient. Cleansed cotton sells at Rs. 6 to Rs. 13 per maund* and jute at Rs. 2 to Rs. 5 per maund.

* Burma rice.

(*a*) The rainfall at Harilaspur, which is very near to Gopalganj, is not shown here.

DACCA, *the 11th July 1931.*

J. C. ROY, for *Director of Agriculture, Bengal.*

Wholesale prices-current of certain articles in the Calcutta mart of Bengal for the second half of June 1931.

Mart.	Wheat.			Raw cotton.		
	Present return.	Next preceding return.	Corresponding return of last year.	Present return.	Next preceding return.	Corresponding return of last year.
1	2	3	4	5	6	7
	Rs. A. P.	Rs. A. P.	Rs. A. P.	Rs. A. P.	Rs. A. P.	Rs. A. P.
Calcutta	2 14 0	2 12 0	5 0 0	19 0 0	17 4 0	18 8 0

Mart.	Coal.			Raw jute (weighted average).			*Gur* (sugarcane).		
	Present return.	Next preceding return.	Corresponding return of last year.	Present return.	Next preceding return.	Corresponding return of last year.	Present return.	Next preceding return.	Corresponding return of last year.
	8	9	10	11	12	13	14	15	16
	Rs. A. P.	Rs. A. P.	Rs. A. P.	Rs. A. P.	Rs. A. P	Rs. A. P.	Rs. A. P.	Rs. A. P.	Rs. A. P.
Calcutta	0 6 6	0 6 6	0 6 6	4 13 0	4 12 3	7 0 0	6 8 0	6 8 0	8 8 0

J. C. ROY, for *Director of Agriculture, Bengal.*

DACCA, *the 8th July 1931.*

Prices-current (retail) of common rice and salt in the districts of Bengal for the second half of June 1931.

Districts and Marts.	Quantity per rupee in seers of eighty tolas.								
	Common rice.						Salt.		
	Average.			Cheapest.					
	Present return.	Next preceding return.	Corresponding return of last year.	Present return.	Next preceding return.	Corresponding return of last year.	Present return.	Next preceding return.	Corresponding return of last year.
	S. Ch.	S. Ch.	S. Ch.	S. Ch.	S. Ch.	S. Ch.	S. Ch.	S. Ch.	S. Ch.
Presidency Division.									
24-Parganas—									
1 Chetla Hat ..	10 5	9 6	6 15	12 0	10 10	7 5	14 0	14 0	14 0
2 Mogra Hat ..	11 13	12 5	7 4	13 5	13 5	7 12	14 8	14 8	16 0
3 Calcutta-Beliaghata	7 4	7 4	4 8	9 6	9 6	5 0	13 0	13 0	10 8†
Nadia—									
4 Goari	9 6	9 6	6 8	9 12	9 12	7 8	13 8	13 8	13 8
5 Ranaghat ..	10 0	9 12	7 4	10 4	10 0	7 8	13 0* / 16 0	13 0* / 16 0	13 0* / 16 0
Murshidabad—									
6 Berhampore ..	11 0	11 8	7 0	11 8	12 0	7 8	15 0	14 0	16 0
7 Kandi	12 0	12 8	7 8	12 4	13 0	8 0	16 0	16 0	15 0
8 Jangipur ..	9 12	10 0	8 0	10 0	11 0	8 4	16 0	16 0.	16 0
Jessore—									
9 Sadar	9 0	9 0	7 0	10 6	10 6	8 0	15 0* / 16 0	15 0* / 16 0	16 0†
10 Bongaon ..	9 8	8 0	7 4	10 8	9 6	8 14	13 0* / 16 0	13 0* / 16 0	13 0†
Khulna—									
11 Sadar	10 8	11 0	6 4	12 0	13 0	7 0	16 0†	16 0†	14 8
12 Bagerhat ..	8 8	8 8	7 0	9 8	9 8	7 4	13 8	13 8	12 8
Burdwan Division.									
Burdwan—									
13 Sadar	8 8	8 8	8 0	10 8	11 8	9 0	16 0	16 0	16 0
14 Kalna	9 12	10 0	7 12	10 2	10 2	8 0	16 4	16 0	15 0
Birbhum—									
15 Suri	12 8	12 8	7 8	13 8	13 0	8 0	15 0	14 0	13 0
16 Rampurhat ..	12 0	11 8	8 0	13 0	12 8	8 8	16 0	16 0	16 0
Bankura—									
17 Sadar	12 0	11 0	7 8	13 0	13 0	8 0	16 0	15 0	15 0
18 Vishnupur ..	10 8	10 0	7 8	12 0	11 0	8 0	15 0	12 8	14 8

* Karkach.

N.B.—The prices of Karkach and Liverpool salt tally with each other in marts marked †.

Prices-current (retail) of common rice and salt in the districts of Bengal for the second half of June 1931.

Districts and Marts.	Quantity per rupee in seers of eighty tolas.								
	Common rice.						Salt.		
	Average.			Cheapest.					
	Present return.	Next preceding return.	Corresponding return of last year.	Present return.	Next preceding return.	Corresponding return of last year.	Present return.	Next preceding return.	Corresponding return of last year.
BURDWAN DIVISION—*concld.*	S. CH.	S. CH.	S. CH.	S. CH.	S. CH.	S. CH.	S. CH.	S. CH.	S. CH.
Midnapore—									
19 Sadar	13 0	13 2	8 8	13 12	13 12	9 0	16 0	13 0	12 0
20 Contai	12 0	13 0	8 0	13 0	14 0	9 0	16 0	16 0	11 0
Hooghly—									
21 Sadar	11 0	9 12	7 8	13 0	10 0	8 8	16 0	16 0	13 0
22 Arambagh ..	11 8	11 12	8 4	12 8	12 12	8 12	12 14* / 15 0	12 14* / 15 0	12 0* / 14 0
Howrah—									
23 Sadar	8 0	8 0	8 0	10 8	10 8	9 8	16 0	16 0	19 0
24 Uluberia ..	10 12	10 12	6 8	11 8	11 8	8 0	18 0	18 0	16 0
RAJSHAHI DIVISION.									
Rajshahi—									
25 Rampur-Boalia ..	9 12	9 12	6 12	10 0	10 10	7 8	12 0†	12 0†	12 12
26 Nator	9 6	9 8	6 0	10 8	10 8	6 6	12 0†	12 0†	12 0†
27 Dinajpur—Railway Hat	12 0	12 0	7 4	13 0	13 0	8 4	14 0	14 0	14 0
28 Jalpaiguri—Sadar ..	9 0	9 0	6 0	9 12	9 8	7 0	13 0	13 0	11 0†
Darjeeling—									
29 Sadar	9 0	9 0	6 0	10 0	10 0	7 4	6 0* / 10 0	6 0* / 10 0	6 0* / 10 0
30 Siliguri ..	8 0	7 0	5 8	10 0	10 0	7 0	9 0* / 13 0	8 0* / 13 0	11 0
Rangpur—									
31 Sadar	9 0	9 8	5 0	10 4	10 12	6 6	12 0†	12 0†	8 0†
32 Nilphamari ..	10 0	10 0	6 4	(a)	(a)	(a)	15 0†	15 0†	10 0†
33 Bogra—Sadar ..	11 4	10 8	6 0	12 0	10 14	6 8	15 0	15 0	12 0†
Pabna—									
34 Sadar	9 8	9 8	6 0	11 8	11 8	6 0	12 8	12 8	12 8*
35 Serajganj ..	11 0	10 8	5 11	12 0	11 8	7 0	15 0*	14 0*	12 0*
Malda—									
36 Sadar	10 4	10 0	7 0	10 8	10 8	8 0	14 0*	14 0*	14 0
37 Balia—Nawabganj	11 2	10 8	6 8	11 2	11 0	(a)	15 0	15 0	16 0

(a) Not available.

* Karkach.

N.B.—The prices of Karkach and Liverpool salt tally with each other in marts marked †.

Prices-current (retail) of common rice and salt in the districts of Bengal for the second half of June 1931.

Districts and Marts.	Quantity per rupee in seers of eighty tolas.								
	Common rice.						Salt.		
	Average.			Cheapest.					
	Present return.	Next preceding return.	Corresponding return of last year.	Present return.	Next preceding return.	Corresponding return of last year.	Present return.	Next preceding return.	Corresponding return of last year.
	S. Ch.	S. Ch.	S. Ch.	S. Ch.	S. Ch.	S. Ch.	S. Ch.	S. Ch.	S. Ch.
Dacca Division.									
Dacca—									
38 Sadar	8 8	8 0	6 0	9 8	9 0	7 8	14 0* / 14 12	13 12* / 14 4	11 4
39 Mirkadim ..	10 0	9 0	7 0	10 8	9 8	7 4	14 8	14 8	15 0
Mymensingh—									
40 Nasirabad ..	9 0	9 0	6 0	10 0	10 0	6 4	12 0*	12 0*	12 0*
41 Netrakona ..	8 0	13 0	6 12	9 0	14 0	7 0	12 8* / 14 8	12 8* / 14 8	12 8* / 14 0
Faridpur—									
42 Sadar	8 8	8 8	6 0	9 0	9 0	6 8	11 0*	11 0*	11 0
43 Rajbari ..	9 0	9 0	6 0	10 8	10 8	7 0	12 0†	12 0†	12 0
Bakarganj—									
44 Barisal ..	9 7	9 9	5 13	10 8	10 8	7 0	16 0	16 0	14 0
45 Pirojpur ..	9 8	10 0	6 0	9 12	10 4	6 6	11 0†	11 0†	13 0
Chittagong Division.									
Tippera—									
46 Comilla ..	10 0	8 15	5 7	11 4	10 0	5 13	12 14	13 5	12 14
47 Chandpur ..	10 8	9 8	6 2	13 8	10 0	6 10	16 0	13 4	13 4
Noakhali—									
48 Kalitara Hat ..	9 0	8 3	5 4	10 0	10 0	5 8	13 0	13 0	13 0
49 Feni Hat ..	9 0	9 0	6 0	9 8	9 8	6 8	7 0* / 13 0	7 0* / 13 0	7 0* / 13 0
Chittagong—									
50 Sadar	10 0	10 0	7 8	12 8	12 0	8 8	18 0	18 0	16 8
51 Cox's Bazar ..	10 0	9 0	5 8	11 0	10 0	(a)	15 0	14 0	13 0
52 Chittagong Hill Tracts —Rangamati ..	12 0	10 0	7 0	13 0	11 0	8 0	5 8* / 12 0	5 8* / 12 0	5 8* / 12 0

(a) Not available. * Karkach.

N.B.—The prices of Karkach and Liverpool salt tally with each other in marts marked †.

DACCA, *the 8th July 1931.* J. C. ROY, for *Director of Agriculture, Bengal.*

Statement showing the daily gauge readings of certain rivers at the stations named below for the 26th June 1931.

Name of river and place where readings are taken.	Hour.	Reading on gauge.	Value of zero referred to P. W. D. datum.	Height above P.W.D. datum.	Compared with previous day's height.		Height above P. W. D. datum on same date in—	
					Rise.	Fall.	1930.	1929.
Ganges .. Monghyr ..	6 a.m. ..	100 90′	0·00′	100·90′	..	..	101·80′	104·10′
Ganges .. Rajmahal ..	6 „ ..	61·45′	—0·12′	61 33′	..	..	63·20′	85·50′
Ganges .. Goalundo ..	8-54 p.m. ..	21·00′	1·409′	22·409′	..	0·20′	21·809′	22·009′
Bhagirathi .. Swarupganj ..	6 a.m. ..	5·90′	0·00′	5·90′	..	..	9 88′	7·20′
Brahmaputra .. Dibrugarh ..	8 a.m. ..	34·60′	*301·50′	336·10′	2·10′	..	337·80′	335·96′
Brahmaputra .. Gauhati ..	....	18·30′	136·958′	155·258′	..	..	158·858	158·058′
Brahmaputra .. Sirajganj ..	12-24 p.m. ..	37·00′	1·509′	38·509′	..	0·30′	39·209′	38·809′
Dhaleswari .. Sabhar ..	7 a.m. ..	17·10′	0·00′	17·10′	..	..	17·70′	..
Meghna .. Fenchuganj ..	7 a.m. ..	26·50′	1·509′	28·009′	0·20′	..	32·959′	..
Meghna .. Bhairab Bazar ..	6-24 a.m. ..	14·67′	1·61′	16·28′	0·37′	..	20·19′	..
Meghna .. Chandpur ..	1-49 p m. ..	9·00′	1·61′	10·61′	Steady.		11·78′	10·95′
Lakhya .. Narayanganj ..	7 a.m. ..	19·33′	—5·59′	13·74′	..	..	15·16′	15·58′
Madaripur Bil Route .. Takerhat ..	7-4 p.m. ..	8·30′	0·00′	8·30′	..	..	9·10	9·80′
Damodar .. Edilpur ..	6 a.m. ..	1·17′	92·58′	93·75′	0·08′	..	101·16′	95·08′

* Zero of gauge has been altered from 5th June 1931.

Statement showing the daily gauge readings of certain rivers at the stations named below for the 27th June 1931.

Name of river and place where readings are taken.	Hour.	Reading on gauge.	Value of zero referred to P.W.D. datum.	Height above P. W. D. datum.	Compared with previous day's height.		Height above P. W. D. datum on same date in—	
					Rise.	Fall.	1930.	1929.
Ganges .. Monghyr ..	6 a.m. ..	101·20′	0·00′	101·20′	0·30′	..	101·70′	104·70′
Ganges .. Rajmahal ..	6 „ ..	62·85′	−0·12′	62·73′	1·40′	..	63·60′	65·70′
Ganges .. Goalundo ..	8-54 a.m. ..	21·20′	1·409′	22·609′	0·20′	..	22·209′	23·209′
Bhagirathi .. Swarupganj ..	7 a m. ..	6·54′	0·00′	6·54′	0·64′	..	9·96′	7·42′
Brahmaputra .. Dibrugarh ..	8 a.m. ..	35·30′	*301·50′	336·80′	0·70′	..	337·80′	..
Brahmaputra .. Gauhati ..	....	20·80′	136·958′	157·758′	2·50′	..	159·158′	158·458′
Brahmaputra .. Serajganj ..	12-24 p.m. ..	37·10′	1·509′	38·609′	0·10′	..	39·309′	38·909′
Dhaleswari .. Sabhar ..	7 a.m. ..	17·20′	0·00′	17·20′	0·10′	..	18·10′	..
Meghna .. Fenchuganj ..	7 a.m. ..	26·80′	1·509′	28·309′	0·30′	..	33·059′	..
Meghna .. Bhairab Bazar ..	6-24 a.m. ..	15·33′	1·61′	16·94′	0·67′	..	20·69′	..
Meghna .. Chandpur ..	2-49 p.m. ..	9·08′	1·61′	10·69′	0·08′	..	11·78′	11·03′
Lakhya .. Narayanganj ..	7 a.m. ..	19·42′	−5·59′	13·83′	0·09′	..	15·41′	..
Madaripur Bil Route .. Takerhat ..	7-4 p.m. ..	8·30′	0·00′	8·30′	Steady		9·30′	9·90′
Damodar .. Edilpur ..	6 a.m. ..	1·25′	92·58′	93·83′	0·08′	..	101·75′	94·91′

* Zero of gauge has been altered from 5th June 1931.

Statement showing the daily gauge readings of certain rivers at the stations named below for the 28th June 1931.

Name of river and place where readings are taken.	Hour.	Reading on gauge	Value of zero referred to P. W. D. datum	Height above P W. D datum.	Compared with previous day's height		Height above P. W. D. datum on same date in—	
					Rise	Fall	1930	1929.
Ganges .. Monghyr ..	6 a.m. ..	101·90′	0·00′	101·90′	0·70′	..	102 00′	105·50′
Ganges .. Rajmahal ..	6 „ ..	63·30′	—0·12′	63·18′	0·45′	..	63·55′	66·10′
Ganges .. Goalundo ..	8-54 a m. ..	21·30′	1·409′	22·709′	0·10′	..	22·909′	23·309′
Bhagirathi .. Swarupganj ..	8 a.m. ..	6·41′	0·00′	6·41′	..	0·13′	9·20′	7·78′
Brahmaputra .. Dibrugarh ..	8 a m. ..	35·00′	*301·50′	336·50′	..	0·30′	336·40′	336·06′
Brahmaputra .. Gauhati ..	....	21·90′	136·958′	158·858′	1·10′	..	159·458′	159·758′
Brahmaputra .. Serajganj ..	12-24 p m ..	37·30′	1·509′	38·809′	0·20′	..	39·309′	39·009′
Dhaleswari .. Sabhar ..	7 a.m. ..	17·10′	0·00′	17·10′	..	0·10′	18·30′	..
Meghna .. Fenchuganj ..	7 a.m ..	27·05′	1·509′	28·559′	0·25′	..	32·909′	..
Meghna .. Bhairab Bazar ..	6-24 a m ..	15·92′	1·61′	17·53′	0·58′	..	21·11′	21·36′
Meghna .. Chandpur ..	3-49 p m. ..	9·17′	1·61′	10·78′	0·08′	..	12·11′	11·03′
Lakhya .. Narayanganj ..	7 a.m. ..	19·58′	—5·59′	13·99′	0·16′	..	15·66′	15·45′
Madaripur Bil Route .. Takerhat ..	10-42 a m. ..	8·30′	0·00′	8·30′	Steady.		9·40′	9·95′
Damodar .. Edilpur ..	6 a.m. ..	1·00′	92·58′	93·58′	..	0·25′	99·58′	94·70′

*Zero of gauge has been altered from 5th June 1931.

Statement showing the daily gauge readings of certain rivers at the stations named below for the 29th June 1931.

Name of river and place where readings are taken.	Hour.	Reading on gauge.	Value of zero referred to P. W. D. datum	Height above P. W. D. datum.	Compared with previous day's height.		Height above P. W. D. datum on same date in—	
					Rise.	Fall.	1930.	1929.
Ganges .. Monghyr	6 a.m. ..	102·50′	0·00′	102 50′	0·60′	..	102·60′	106·30′
Ganges .. Rajmahal	6 „ ..	63·90′	—0·12′	63·78′	0·72′	..	63·15′	66·70′
Ganges .. Goalundo	8-54 a.m. ..	21·90′	1·409′	23·309′	0·60′	..	22·909′	23·309′
Bhagirathi .. Swarupganj	8 a.m. ..	6·63′	0·00′	6·63′	0·42′	..	8 66′	7·86′
Brahmaputra .. Dibrugarh	8 a.m ..	34·00′	*301·50′	335·50′	..	1·00′	335·30′	336·56′
Brahmaputra .. Gauhati	....	22·70′	136·958′	159·658′	0·80′	..	159·658′	159·158′
Brahmaputra .. Serajganj	12-24 p.m.	37·50′	1·509′	39·009′	0·20′	..	39·209′	39·109′
Dhaleswari .. Sabhar	7 a.m. ..	17·00′	0·00′	17·00′	..	0·08′	18·50′	..
Meghna .. Fenchuganj	7 a.m. ..	27·30′	1·509′	28·809′	0·25′	..	32·809′	..
Meghna .. Bhairab Bazar	6-24 a.m. ..	16·08′	1·61′	17·69′	0·17′	..	21·36′	21·36′
Meghna .. Chandpur	4-39 p.m. ..	9·50′	1·61′	11·11′	0·33′	..	12·36′	11·11′
Lakhya .. Narayanganj	7 a.m. ..	19·92′	—5·59′	14·33′	0·34′	..	15·83′	15·49′
Madaripur Bil Route .. Takerhat	11-28 a.m. ..	8·50′	0·00′	8·50′	0·20′	..	9·50′	10·00′
Damodar .. Eddlpur	6 a.m. ..	3·58′	92·58′	96·16′	2·58′	..	97·91′	96·50′

Zero of gauge has been altered from 5th June 1931.

Statement showing the daily gauge readings of certain rivers at the stations named below for the 30th June 1931.

Name of river and place where readings are taken.	Hour.	Reading on gauge.	Value of zero referred to P. W. D. datum.	Height above P. W. D. datum.	Compared with previous day's height.		Height above P. W. D. datum on same date in—	
					Rise.	Fall.	1930.	1929.
Ganges .. Monghyr	6 a.m. ..	103·00′	0·00′	103 00′	0·50′	..	103·10′	106·30′
Ganges .. Rajmahal	6 „ ..	64 25′	−0·12′	64 13′	0 35′	..	63·30′	67·40′
Ganges .. Goalundo	8-54 a m. ..	22 40′	1·409′	23·809′	0·50′	..	22·909′	23 309′
Bhagirathi .. Swarupganj	9 a.m. ..	6·01′	0 00′	6·01′	..	0 62′	8 25′	9·50′
Brahmaputra .. Dibrugarh	8 a.m. ..	33 20′	*301·50′	334·70′	..	0·80′	334·20′	338·36′
Brahmaputra .. Gauhati	....	23 50′	136·958′	160·458′	0 80′	..	159 758′	159·658′
Brahmaputra .. Serajganj	12-24 p m. ..	37·70′	1·509′	39·209′	0·20′	..	39·209′	39·209′
Dhaleswari .. Sabhar	7 a.m. ..	17·20′	0·00′	17·20′	0 20′	..	18·60′	....
Meghna .. Fenchuganj	7 a.m. ..	27·55′	1·509′	29·059′	0·25′	..	32·659′	....
Meghna .. Bhairab Bazar	6-24 a m. ..	16·08′	1·61′	17 69′	Steady		21·44′	21·36′
Meghna .. Chandpur	5-24 p.m. ..	9·92′	1·61′	11·53′	0·42′	..	12·44′	11·11′
Lakhya .. Narayanganj	7 a.m. ..	20·42′	−5·59′	14·83′	0·50′	..	16·16′	15·45′
Madaripur Bil Route .. Takerhat	1-24 p m. ..	8·70′	0·00′	8·70′	0·20′	..	9·60′	10·00′
Damodar .. Edilpur	6 a.m. ..	3·00′	92·58′	95·58′	..	0·58′	97·41′	98·66′

* Zero of gauge has been altered from 5th June 1931.

Statement showing the daily gauge readings of certain rivers at the stations named below for the 1st July 1931.

Name of river and place where readings are taken.	Hour.	Reading on gauge.	Value of zero referred to P. W. D. datum.	Height above P. W. D. datum.	Compared with previous day's height		Height above P. W. D. datum on same date in—	
					Rise.	Fall.	1930.	1929.
Ganges .. Monghyr ..	6 a.m. ..	103·40	0·00′	103·40′	0·40′	..	103·30′	106·70′
Ganges .. Rajmahal ..	6 ,, ..	64·70′	—0·12′	64·58′	0·45′	..	63·40′	68·00′
Ganges .. Goalundo ..	8-54 a.m. ..	23·20′	1·409′	24·609′	0·89′	..	23·009′	23·390′
Bhagirathi .. Swarupganj ..	9 a.m. ..	7·45′	0·00′	7·45′	1 44′	..	7·96′	9 88′
Brahmaputra .. Dibrugarh ..	8 a.m. ..	32·10′	*301·50′	333·60′	..	1·10′	333·40′	338·96′
Brahmaputra .. Gauhati ..	....	23·90′	136·958′	160·858′	0·40′	..	159·058′	159·358
Brahmaputra .. Serajganj ..	12-24 p.m. ..	38 20′	1·509′	39·709′	0·50′	..	39·309′	39·309′
Dhaleswari .. Sabhar ..	7 a.m. ..	17·70′	0·00′	17·70′	0·50′	..	18·70′	..
Meghna .. Fenchuganj ..	7 a.m. ..	27·80′	1·509′	29·309′	0·25′	..	32·559′	..
Meghna .. Bhairab Bazar ..	6-24 a.m. ..	16·08′	1·61′	17·69′	Steady.		21·57′	21·28′
Meghna .. Chandpur ..	5-59 p.m. ..	10·50′	1·61′	12·11′	0·58′	..	12·86′	11·19′
Lakhya .. Narayanganj ..	7 a.m. ..	20·50′	—5·59′	14·91′	0·08′	..	16 45′	15·41′
Madaripur Bil Route .. Takerhat ..	2-54 p.m. ..	9·05′	0·00′	9·05′	0·35′	..	9·90′	9·95′
Damodar .. Edilpur ..	6 a.m. ..	3·42	92·58′	96·00′	0·42′	..	96·91′	97·50′

Zero of gauge has been altered from 5th June 1931.

Statement showing the daily gauge readings of certain rivers at the stations named below for the 2nd July 1931.

Name of river and place where readings are taken.	Hour.	Reading on gauge.	Value of zero referred to P. W. D. datum.	Height above P. W. D. datum.	Compared with previous day's height.		Height above P. W. D. datum on same date in—	
					Rise.	Fall.	1930.	1929.
Ganges .. Monghyr ..	6 a.m. ..	104·10′	0·00′	104·10′	0·70′	..	103·40′	109·10′
Ganges .. Rajmahal ..	6 „ ..	65·00′	—0·12′	64·88′	0·30′	..	63·40′	69·50′
Ganges .. Goalundo ..	8-54 a.m. ..	23·70′	1·409′	25·109′	0·50′	..	23·209′	23·509′
Bhagirathi .. Swarupganj ..	9 a.m. ..	7·77′	0·00′	7·77′	0·32′	..	7·95′	9·42′
Brahmaputra .. Dibrugarh ..	8 a.m. ..	32·10′	*301·50′	333·60′	Steady.		..	339·86′
Brahmaputra .. Gauhati ..	....	23·90′	136·958′	160·858′	Steady.		157·958′	159·958′
Brahmaputra .. Serajganj ..	12-24 p.m. ..	38·50′	1·509′	40·009′	0·30′	..	39·309′	39·609′
Dhaleswari .. Sabhar ..	7 a.m. ..	18·10′	0·00′	18·10′	0·40′	..	18·99′	..
Meghna .. Fenchuganj ..	7 a.m. ..	27·95′	1·509′	29·459′	0·15′	..	32·409′	..
Meghna .. Bhairab Bazar ..	6-24 a.m. ..	16·25′	1·61′	17·86′	0·17′	..	21·65′	21·28′
Meghna .. Chandpur ..	6-39 „ ..	10·83′	1·61′	12·44′	0·33′	..	12·61′	11·11′
Lakhya .. Narayanganj ..	7 a.m. ..	21·08′	—5·59′	15·49′	0·58′	..	16·37′	15·49′
Madaripur Bil Route .. Takerhat ..	3-45 p.m. ..	9·30′	0·00′	9·30′	0·25′	..	10·10′	9·95′
Damodar .. Edilpur ..	6 a.m. ..	3·58′	92·58′	96·16′	0·16′	..	96·33′	97·00′

* Zero of gauge has been altered from 5th June 1931.

CALCUTTA IMPROVEMENT TRUST.

5, Clive Street, Calcutta, the 16th June 1931.

Notice under Section 43 of Bengal Act V of 1911.

Scheme No. XXXVIII—Mission Row to Central Avenue (portion of Alignment Nos. X and XI).

The Board of Trustees for the Improvement of Calcutta hereby give notice that a street scheme, viz., Scheme No. XXXVIII—Mission Row to Central Avenue, which includes portions of Alignment Nos. X and XI as sanctioned by Government, in Wards Nos. X and XII of the Calcutta Municipality, has been framed for the area bounded as follows:—

On the North—From a point on the middle of Dalhousie Square East about 60 feet from the south-western corner of No. 6, Dalhousie Square East, running eastwards in a straight line across Dalhousie Square East, and Mission Row and along the northern boundary of No. 9, Mission Row to the north-eastern corner of No. 8, Mission Row. Thence running in a south-easterly direction across Bentinck Street to the south-western corner of No. 74, Bentinck Street, thence running eastwards along the northern edge of Weston Street to south-eastern corner of 15, Bow Street and thence to the north-eastern corner of No. 2, Kapalitola Lane, and thence in a south-easterly direction across Khetra Das Lane and Kapalitola Lane to the north-eastern corner of 15, Khetra Das Lane.

On the East—From this point running southwards in a straight line along the eastern boundaries of 15, 14/1, 14, and 5, Khetra Das Lane to the south-western corner of No. 12, Khetra Das Lane.

From this point running westwards along the southern boundary of No. 5, Khetra Das Lane, southern and western boundary of No. 2, Khetra Das Lane, a portion of the southern boundary of No. 25, Khairu Lane, the eastern and southern boundary of No. 23, Khairu Lane and across Khairu Lane to a point on the eastern boundary of No. 4B, Khairu Lane about 30 feet from its south eastern corner. Thence southwards along the western edge of Khairu Lane to the south-eastern corner of 9/2, Khairu Lane.

On the South—Thence running westwards along a portion of the northern boundary of Scheme VIIE and the northern boundary of the mosque at No. 23, Prinsep Street to the south-western corner of No. 4, Metcalfe Street: thence westwards to the eastern edge of Bentinck Street about 60 feet from its junction with northern edge of Prinsep Street and thence across Bentinck Street along the southern edge of Mangoe Lane across Nos. 4 and 3, Mangoe Lane and No. 12, Old Court House Street to a point on the middle of Old Court House Street about 57 feet away from the north-western corner of No. 12, Old Court House Street.

On the West—From this point running northwards in a straight line along the middle of Old Court House Street and Dalhousie Square East to its starting point.

Particulars of the scheme, map of the area comprised in the scheme and a statement of the land which it is proposed to acquire may be inspected at the offices of the Trust, No. 5, Clive Street on week days between the hours of 11 a.m. and 4 p.m. and on Saturdays between 11 a.m. and 2 p.m.

Copies of the above documents will be delivered to the applicant on payment of the following fees:—

		Rs.	A.
Particulars of the scheme	...	0	4
Map of the area	...	1	0
Statement of the land which it is proposed to acquire	...	0	4

Objections to the scheme will be received up to the 10th October 1931.

J. A. L. SWAN, *Chairman.*

Statement of weekly gauge readings on the river Ganges at Rampur Boalia for the week ending the 4th July 1931.

Date.	Hour.	Height of surface above zero of gauge	Height of surface above P. W. D datum.	Height of surface above P. W. D datum on the same date of last year	Remarks.
1931.					
28th June ..	7 a.m.	....	37·95	41·00	Value of zero = 0·00 P. W. D.
29th „ ..	7 „	....	38·80	41·20	
30th „ ..	7 „	....	39·65	41·20	Zero of gauge referred to B. M. on Rajshahi College step ; value 64·73.
1st July ..	7 „	....	40·25	41·10	
2nd „ ..	7 „	....	40·90	41·15	
3rd „ ..	7 „	....	41·40	41·05	
4th „ ..	7 „	....	41·85	41·10	

Highest recorded level on 26-8-1879=64·24.
Lowest recorded level on 25-4-1884=32·62.

P. C. RASU, *Subdivisional Officer,*
Irrigation Department, Rajshahi.

RAMPUR BOALIA, *the 4th July 1931.*

Statement showing the gauge readings at Dacca Waterworks on the river Buriganga for the week ending 4th July 1931.

Date.	At highest water.		At lowest water.		Commencement of—		Remarks.	
	Time	Reading	Time.	Reading	Ebb tide.	Flow tide.	At 7 a.m.	At 5 p.m.
1931.								
28th June ..	Tide is not perceptible.						12·55	12·6
29th „ ..							12·75	12·85
30th „ ..							13 0	13·1
1st July ..							13·4	13·6
2nd „ ..							13·85	14·0
3rd „ ..							14·2	14·3
4th „ ..							14·5	14·6

B. M. on settling tank 30·49 O. M. S. L. Zero is at O. M. S. L.

Notable high and low water-levels of previous years.

		Taken at high tide.				Taken at low tide.
27th August	1906 ..	70·5	23rd February	1907 ..	51·06
5th September	1909 ..	66·86	13th „	1908 ..	51·06
10th August	1910 ..	69·86	12th March	1912 ..	51·06
1st „	1911 ..	68·46	6th „	1914 ..	50·60
13th „	1912 ..	67·16	22nd February	1915 ..	50·30
31st „	1915 ..	69·7	15th „	1916 ..	50·60
8th „	1916 ..	68·1	3rd March	1917 ..	51·0
12th „	1917 ..	67·1	21st February	1918 ..	51·40
13th „	1918 ..	69·12	26th „	1919 ..	50·4
2nd „	1919 ..	66·8	18th „	1920 ..	50·9
8th September	1920 ..	66·9	19th „	1921 ..	50·9
28th July	1921 ..	68·4	8th March	1922 ..	51·05
10th August	1922 ..	68·00	14th „	1923 ..	50·8
31st July	1923 ..	66·15	16th February	1924 ..	50·50
29th August	1924 ..	68·82	5th March	1925 ..	50·9
8th September	1925 ..	68·52	9th February	1926 ..	2·2
15th August	1926 ..	19·6	27th „	1927 ..	2·10
17th September	1927 ..	18·70	16th „	1928 ..	2·2
22nd August	1928 ..	20·0	21st „	1929 ..	2·0
13th July	1929 ..	17·8	24th „	1930 ..	2·3
12th September	1930 ..	18·65			

N. B.—Zero of the gauge at Dacca Waterworks prior to 11 a.m. on the 8th January 1926= −48·51 with reference to P. W. D. datum.

Zero of the gauge at Dacca Waterworks since 11 a.m. on the 8th January 1926=0·00 with reference to P. W. D. datum.

W. R. ROBSON, *Executive Engineer,*
Khulna Division.

KHULNA, *the 10th July 1931*

DEPARTMENT OF AGRICULTURE, BENGAL.

PRELIMINARY FORECAST OF THE JUTE CROP, 1931.

Consolidated Statement for Bengal, Bihar and Orissa and Assam.

[This Forecast deals with estimates of areas only. Estimates of outturn are dealt with in the Final Forecast.]

Area in 1931.—The estimated area of jute in the three provinces is 1,899,600 acres, a decrease of 1,631,000 acres, or about 46 per cent as compared with the revised total for 1930.

The consolidated figures are as follows:—

Name of province	Estimated area under jute			Difference between the preliminary forecast 1931, and final forecast, 1930	
	1930		1931	Increase	Decrease
	Preliminary	Final	Preliminary		
1	2	3	4	5	6
	Acres	Acres	Acres	Acres	Acres
Bengal (including Cooch Behar and Tripura States)	3,062,300	3,062,300	1,650,300	....	1,412,000
Bihar and Orissa ..	238,000	238,000	148,800	....	89,200
Assam ..	206,400*	230,300*	100,500	....	129,800
Total ..	3,506,700*	3,530,600*	1,899,600	....	1,631,000

*Revised.

The Departmental Preliminary Forecasts for the three provinces are appended.

ROBERT S. FINLOW,
Director of Agriculture, Bengal.

CALCUTTA,
The 15th July 1931.

DEPARTMENT OF AGRICULTURE, BENGAL.

PRELIMINARY FORECAST OF THE JUTE CROP OF BENGAL, 1931.

[NOTE.—On an average of the five years ending 1928-29, the area under jute in Bengal, to which this Forecast relates, represents some 85·8 per cent. of the total area under jute in British India.]

The Preliminary Forecast deals only with the estimates of area sown and the condition of the crop at the time of publication of the forecast The estimates of area are based on information received through the Collectors from the Revenue staff, also from Panchayets and Agricultural Officers.

Area sown in 1931.—In Bengal, returns for the present season show a total area of 1,650,300 acres, a decrease of about 1,412,000 acres, or 46 per cent. as compared with the figures for 1930.

Character of the season.—Sowing conditions were generally favourable, except for drought in parts of the Presidency Division, and in the Malda district, which tended to restrict sowings in these tracts. Prolonged heavy rain in May exercised definitely unfavourable influence on the crop in the Kishoreganj and Netrakona subdivisions of Mymensingh, and to a less extent in the Sadar subdivision of the same district. Heavy rain is also reported to have affected the crop in portions of the Faridpur district and in some parts of North Bengal.

Present state of the crop.—With the exceptions mentioned above, the present state of the crop is favourable, on the whole.

Stocks.—Large stocks of old jute are reported from most districts.

ROBERT S. FINLOW,
Director of Agriculture, Bengal.

CALCUTTA,
The 15th July 1931.

APPENDIX I.

Preliminary forecast of the jute crop of Bengal, 1931.

District.	Estimated area under jute		Whether much, little or no jute remains in the district from the crop of 1930.	Date by which the sowing of the crop generally commenced this year, and whether that date was early normal or late.	Remarks by District Officers.
	Last year.	This year.			
1	2	3	4	5	6
	Acres.	Acres			
24-Parganas ..	60,000	45,000	Much ..	Middle of May. Late	The decrease in area is due to low price of jute and to propaganda against jute cultivation The weather has not been favourable. The crop has been damaged to the extent of two annas by drought
Nadia ..	56,000	30,000	Much ..	Latter part of May.	The decrease in area is due to slump in jute and to propaganda against jute cultivation. The weather has been fair.
Murshidabad ..	33,000	14,000	Much ..	End of May to middle of June Late	The decrease in area is due to low price and to propaganda for restriction of jute cultivation. The weather was unfavourable at the beginning.
Jessore ..	103,000	46,000	A good quantity	End of April to middle of May. Normal.	The decrease in area is due to abnormally low price and to propaganda for restriction of jute cultivation. The weather has been fair.
Khulna ..	35,000	21,000	Little ..	Beginning of May. Normal.	The decrease in area is due to low price of jute and to propaganda for restriction of jute cultivation. The weather was not favourable at sowing time.
Burdwan ..	3,000	2,000	Much ..	End of May ..	Low price of jute is responsible for the decrease in area. The weather has been fair.
Midnapore ..	8,000	4,000	Much ..	End of May. Late.	The decrease in area is due to low price of jute. The weather was not favourable at sowing time.
Hooghly ..	20,000	20,000	Much ..	Third week of May. Late.	The decrease in area is due to unfavourable weather at sowing time and to low price of jute and also to propaganda for restriction of jute cultivation.
Howrah ..	7,000	4,000	Appreciable balance.	Middle of June. Late.	The decrease in area is due to abnormal slump in jute trade.
Rajshahi ..	85,000	68,000	Much ..	Beginning of April. Late.	The decrease in area is due partly to low price of jute, partly to intensive propaganda for restriction of jute cultivation and partly to late rains. The weather was not favourable at sowing time.
Dinajpur ..	73,000	41,000	Much ..	First week of May. Late.	The decrease in area is due to previous stock, to low price of jute and to propaganda work. The weather was not favourable at the beginning owing to drought.
Jalpaiguri ..	42,000	26,000	Much ..	First week of April. Normal.	The decrease in area is due to low price of jute and to propaganda for restriction of jute cultivation. There was drought at first but subsequent heavy and constant rainfall rendered the fields unfit for weeding in some places.
Darjeeling ..	4,000	2,000	Little ..	April. Normal	The decrease in area is due to low price. The weather was fair.
Rangpur ..	320,000	180,000	Much ..	March. Normal	The decrease in area is due to low price of jute and to drought at sowing time followed by constant rainfall and hail-storm. The weather has not been satisfactory for the growth of the crop.
Bogra ..	103,000	60,000	Much ..	February. Normal.	The decrease in area is due to low price of jute and to considerable stock of last year's crop.
Pabna ..	155,000	87,000	Good quantity	Middle of March to beginning of May. Late.	The decrease in area is due to low price of jute. The weather has been fairly favourable.
Malda ..	38,000	16,000	Little ..	First week of June. Very late.	The decrease in area is due to propaganda combined with bad weather conditions at the time of sowing. Subsequent drought also affected the germination and growth of the crop. Present condition is unsatisfactory.

District	Estimated area under jute		Whether much, little or no jute remains in the district from the crop of 1930.	Date by which the sowing of the crop generally commenced this year, and whether that date was early, normal or late	Remarks by District Officers
	Last year.	This year			
1	2	3	4	5	6
	Acres.	Acres			
Dacca ..	378,000	215,000	Much ..	First week of March A little late	The decrease in area is due to fall in price and to propaganda for restriction of jute cultivation Rains early in May have slightly affected the growth of the crop
Mymensingh ..	749,000	415,000	Large stocks ..	Latter part of March to beginning of April Slightly late.	The decrease in area is due to low price of jute and to propaganda against jute cultivation. Heavy rains, while the crop was a few inches high water-logged the plants and retarded the progress Water logging has caused damage to the extent of two annas The present condition is fair. The crops are very patchy
Faridpur ..	314,000	144,000	Much ..	Middle of April Late	The decrease in area is due to fall in price of jute The weather was favourable for high land jute at sowing time but unfavourable for low land jute Continuous heavy rains in May retarded the growth of the crop and encouraged the growth of weeds and submerged the low land crop to some extent Appreciable damage has been caused by hailstorm and insect pests
Bakarganj ..	52,000	25,000	Much ..	March Normal	The decrease in area is due to low price of jute The weather at sowing time was favourable but excessive rain in May affected the growth of the crop by water logging Present condition is not very good
Chittagong ..	300	300	None ..	Middle of May Normal	The weather was favourable
Tippera ..	308,000	140,000	Little ..	March Normal	The decrease in area is due to low price of jute and to propaganda for restriction of jute cultivation There was shortage of rain at sowing time The crop in low lying areas has been slightly damaged by flood Present condition is satisfactory
Noakhali ..	64,000	28,000	Much ..	Normal ..	The decrease in area is due to low price of jute and to propaganda for restriction of jute cultivation Some damage has been done by flood owing to early heavy rain. Present condition of the crop is good
Total for Bengal ..	3,028,300	1,633,300			
Cooch Behar ..	31,000	16 000	Much ..	First week of March to end of May.	The decrease in area is due to low price of jute The weather was not favourable at sowing time The condition of crop improved later on Some damage has been caused by heavy rain.
Tripura State ..	3,000	1,000	Little ..	Middle of April Normal	The decrease in area is due to low price of jute The effects of weather on the growth and cultivation have not been bad on the whole.
Grand Total ..	3,062,300	1,650,300			

APPENDIX II.

Statement of rainfall in inches from February to June each year from 1928 to 1931.

District.	Rainfall in February.					Rainfall in March.					Rainfall in April.					Rainfall in May.					Rainfall in June.				
	1928	1929	1930	1931	Normal.	1928	1929	1930	1931	Normal.	1928	1929	1930	1931	Normal.	1928	1929	1930	1931	Normal.	1928	1929	1930	1931	Normal.
24-Parganas ..	0·07	0·77	0·65	2·22	1·16	0·03	1·84	0·46	0·91	1·60	2·56	2·06	0·68	1·44	2·03	5·14	0·60	4·75	7·11	5·58	16·64	10·08	10·06	8·31	11·57
Nadia ..	Nil	0·42	0·39	2·04	0·9	0·22	1·51	1·74	1·10	1·63	2·58	3·40	1·56	0·38	2·75	6·76	5·13	5·58	7·06	6·40	14·47	8·74	9·54	9·26	9·95
Murshidabad ..	0·03	0·02	0·36	1·77	0·76	0·09	1·23	1·84	2·02	1·02	1·53	1·99	1·04	0·12	1·55	4·91	4·58	2·80	3·28	5·29	13·39	7·77	8·54	8·64	10·52
Jessore ..	0·10	0·41	0·34	1·89	1·21	0·27	1·65	1·79	1·14	2·01	2·00	5·64	1·64	1·06	3·54	6·21	3·23	8·07	11·06	7·40	10·74	8·74	8·71	7·56	11·90
Khulna ..	Nil	0·34	0·10	1·63	1·23	0·02	2·26	0·84	1·17	2·07	2·53	3·74	1·10	2·02	3·72	6·13	2·58	6·43	8·57	7·43	14·93	11·72	10·83	6·91	13·28
Burdwan ..	Nil	0·52	0·18	3·14	1·09	0·03	2·36	0·68	0·63	1·63	1·15	0·68	0·77	0·97	1·65	4·42	1·89	3·60	3·68	4·88	21·49	8·82	5·78	4·90	10·81
Midnapore ..	0·12	0·36	0·86	3·91	1·10	0·08	1·89	0·67	1·37	1·67	2·93	2·15	0·85	0·88	1·72	4·16	1·81	3·27	4·03	5·29	17·07	10·27	7·38	5·47	11·83
Hooghly ..	0·21	0·79	0·84	2·19	1·16	0·35	1·28	0·54	1·27	1·45	2·30	2·41	0·50	1·66	2·17	4·68	1·39	4·14	6·42	5·58	16·64	7·19	6·71	6·12	9·90
Howrah ..	0·02	0·86	0·60	2·94	1·29	0·44	1·95	0·36	0·94	1·71	3·89	3·03	0·15	1·63	2·07	5·70	0·95	3·72	5·61	5·52	17·44	14·40	12·66	7·38	11·73
Rajshahi ..	0·17	0·06	0·54	0·82	0·65	0·19	1·02	1·72	1·92	0·95	1·41	3·07	1·01	0·29	1·67	3·35	4·75	3·41	5·56	5·89	17·04	9·27	13·88	9·34	11·30
Dinajpur ..	0·19	Nil	0·35	0·52	0·68	Nil	0·40	0·99	0·63	0·82	3·58	3·30	1·01	1·05	1·94	5·63	5·69	5·57	4·88	6·71	17·15	9·51	12·56	9·19	14·61
Jalpaiguri ..	0·11	Nil	1·47	0·65	0·89	0·26	2·08	3·75	1·58	1·88	5·51	7·11	3·81	6·05	5·63	10·61	15·99	9·15	14·15	14·22	24·02	26·92	27·74	12·14	28·25
Darjeeling ..	1·91	0·48	1·38	0·46	1·00	0·76	2·80	3·68	0·57	1·71	4·39	6·09	3·71	5·35	3·97	9·83	6·03	6·80	10·27	9·16	25·45	25·15	19·46	17·61	24·39
Rangpur ..	0·26	0·01	0·84	0·25	0·64	Nil	0·74	0·92	0·93	1·16	4·52	4·56	2·36	3·79	3·22	11·14	10·28	8·36	12·15	10·60	15·29	8·95	23·31	14·36	17·41
Bogra ..	0·08	0·11	0·25	0·88	0·72	0·21	0·28	1·98	0·98	1·00	1·29	2·98	1·68	0·26	2·27	8·43	5·70	8·82	9·58	7·49	15·42	8·46	15·61	6·79	11·92
Pabna ..	Nil	0·13	0·49	1·07	0·79	0·23	0·72	2·06	1·90	1·35	1·90	4·94	1·67	0·56	2·38	9·97	6·21	6·37	11·50	7·02	12·44	9·57	13·32	11·34	11·33
Malda ..	0·35	0·01	0·34	0·65	0·79	Nil	0·96	0·05	0·57	0·73	1·00	2·23	0·81	0·04	1·21	4·82	4·11	4·05	4·55	4·62	17·99	7·38	7·39	6·09	10·68
Dacca ..	0·75	0·01	0·12	1·10	1·09	1·48	1·37	4·54	1·57	2·64	2·49	5·34	4·19	3·90	5·85	11·16	6·07	9·39	15·81	9·27	10·33	11·22	17·56	7·85	14·02
Mymensingh ..	0·11	0·12	0·55	0·55	0·81	0·28	0·60	2·68	0·60	1·72	4·21	6·85	2·78	5·59	4·55	13·46	13·07	10·83	15·72	11·15	18·83	12·97	21·66	13·62	17·83
Faridpur ..	0·02	0·12	0·07	1·52	1·12	1·01	1·33	3·62	1·30	2·29	2·67	5·94	3·66	3·78	5·10	7·39	4·56	6·53	15·78	8·95	11·19	8·79	12·39	6·32	14·52
Bakarganj ..	0·04	0·13	0·18	0·41	1·12	0·29	2·41	3·07	2·75	2·04	1·65	5·04	1·24	2·99	4·53	7·71	3·22	6·04	14·38	9·25	27·78	19·47	17·56	12·35	18·28
Chittagong ..	Nil	0·03	0·32	0·01	0·68	0·23	0·47	4·82	1·58	2·18	1·10	7·73	2·70	1·51	5·14	11·96	7·99	13·73	19·03	10·38	30·05	23·57	19·96	15·09	23·11
Tippera ..	0·25	Nil	0·25	1·26	1·08	2·34	0·84	4·53	1·60	2·88	2·20	7·04	3·71	2·87	6·47	17·45	7·58	8·44	16·44	10·71	16·74	21·82	22·81	8·45	16·01
Noakhali ..	0·08	Nil	0·14	0·47	0·99	1·42	0·82	4·31	1·41	2·60	0·64	6·10	2·44	2·46	6·15	13·32	4·10	8·02	18·26	10·48	26·11	22·38	22·02	14·22	21·28
Cooch Behar ..	0·27	Nil	0·36	0·34	0·71	1·80	0·98	2·96	2·19	1·58	6·72	4·04	2·63	7·17	4·97	10·72	14·80	8·42	20·87	13·99	18·85	19·08	31·22	25·16	28·23
Tripura State ..	1·27	Nil	Nil	0·90	1·24	1·80	1·12	7·08	1·94	3·78	6·72	11·30	7·79	3·74	6·54	18·11	10·22	11·94	16·53	11·31	9·12	15·37	20·13	13·54	15·41

Note.—The figures given above are the averages for all the rainfall-registering stations in each district.

DEPARTMENT OF AGRICULTURE, BIHAR AND ORISSA.

PRELIMINARY FORECAST OF THE JUTE CROP OF BIHAR AND ORISSA, 1931.

[NOTE.—On an average of the five years ending 1928-29, the area under jute to which Bihar and Orissa Forecast relates, represents about 7·9 per cent. of the total area under jute in British India.]

The present forecast deals only with the estimated area sown. It gives also a general survey of prospects, but makes no reference to the probable outturn either in percentage figures or in bales.

2. **Acreage.**—I estimate the area sown during the current and four preceding years in round numbers as follows:—

Year.	Acreage.
1927	... 241,000
1928	... 247,000
1929	... 238,000
1930	... 238,000
1931	... 148,800

3. **Weather conditions.**—In March light rain fell in the jute districts. The fall was above the normal in Champaran, Darbhanga, Bhagalpur, the Santal Parganas, Balasore, normal in Purnea, and below the normal in the remaining two jute districts. In April and May light rain fell in all the jute districts. The fall was below the normal everywhere. In June rain fell in all the jute districts; the fall was light everywhere except Cuttack, where it was moderate. The weather conditions are reported to be not favourable in the important districts of Purnea and Cuttack, and also in Darbhanga, Bhagalpur and the Santal Parganas, owing to insufficiency of rain. Sowings are still going on in Cuttack.

4. **District returns.**—Last year's area under jute was finally estimated at 238,000 acres. The total area under jute this year is estimated by District Officers in round number at 127,500 acres. This area appears, however, to be an underestimate, and in my opinion this year's figure is likely to be not less than 148,800 acres. The decrease in comparison with last year is due to the decrease in the price of jute and insufficiency of rain at the time of sowings.

5. **Condition and prospects.**—The condition of the crop is fair.

6. **General.**—The quantity of jute which remains in the jute districts from the crops of 1930 is reported to be small, except in Champaran, Bhagalpur and in parts of Purnea, where the stock is reported to be considerable.

The statement below compares the estimated area under jute in this province this year with the preliminary and final figures of last year:—

Name of province.	Estimated area under jute.			Difference between the preliminary forecast, 1931, and final forecast, 1930.	
	1930		1931		
	Preliminary.	Final.	Preliminary.	Increase.	Decrease.
1	2	3	4	5	6
	Acres.	Acres.	Acres.	Acres.	Acres.
Bihar and Orissa ..	238,000*	238,000*	148,800	....	89,200

*Revised.

G. S. HENDERSON,
Director of Agriculture, Bihar and Orissa.

PATNA,
The 2nd July 1931.

APPENDIX I.

Preliminary forecast of the jute crop of Bihar and Orissa for 1931.

Division.	District.	Total area of the district.	Estimated total area under cultivation.	Estimated normal area under jute (The figure has been arrived at by taking the average of 10 years immediately preceding the year to which this forecast relates.)	Estimated area under jute.		Whether much, little or no jute remains in the district from the crop of 1930.	Date by which the sowing of the crop generally commenced this year, and whether that date was early, normal or late.	Remarks by District Officers
					Last year (1930) final figure.	This year 1931).			
1	2	3	4	5	6	7	8	9	10
		Acres.	Acres.	Acres.	Acres.	Acres.			
Tirhut . ..	Champaran .	2,263,194	1,430,200	2,700	7,676	2,500	Much	April ..	The weather and rainfall have been favourable The present condition of the crop is fair. The date of sowing was normal and has been completed The decrease in area sown is due to much jute remaining unsold in the district owing to the low prices and little demand.
	Muzaffarpur ..	1,934,630	1,627,000	2,500	4,000	3,900	Nil .	March .	The condition of the crop is fair The date of sowing was normal.
	Darbhanga ..	2,142,720	1,677,800	1,600	1,236	1,250	Nil ..	Latter part of May and early in June (normal).	The prospect of the crop is not good owing to scanty rainfall.
Bhagalpur	Bhagalpur ..	2,661,120	1,684,100	2,600	4,915	2,075	Much (owing to general trade depression).	Last week of April (normal).	For want of rain further cultivation of jute crop is at a complete standstill.
	Purnea	3,196,160	1,604,400	175,400	140,000	160,000	Much in Kishanganj and Araria but little in Sadr.	May ..	The weather and rainfall have not been favourable The present condition of the crop is fair at places but will suffer, if the rain does not fall soon The sowing was late at places for want of timely rainfall, while at others it was normal where jute was sown on low lands The crop of this year will be worse than last year if there be no sufficient rain immediately The decrease in area under the crop is due to slump in jute and want of rains.
	Santal Parganas ..	3,500,800	1,717,900	1,000	750	500	Very little ..	May (late) ..	The decrease in the estimated area under the crop may be attributed to scanty and belated rainfall The growth of the seedlings is not satisfactory.
Orissa . ..	Cuttack	2,338,560	1,223,500	17,900	18,200	14,500	About 12 per cent.	Second week of May	The weather condition is not good as there is no sufficient rainfall. Sowing has not yet been completed Area under jute crop is low owing to the low price of jute and the tenants have not sown the crop in sufficient area
	Balasore ..	1,334,400	933,200	2,600	2,500	2,400	Little .	Latter part of May	The general survey of the prospect of the jute crop is fair
	Total ..	19,371,584	11,987,100	206,300	178,957 or in round numbers 179,000†	127,495 or in round numbers 127,500*			

*Revised to 142,600 acres. †Revised to 238,000 acres.

APPENDIX II.

Statement of rainfall in inches from February to June each year from 1928 to 1931.

Name of district.	Rainfall in February.				Rainfall in March.				Rainfall in April.				Rainfall in May.				Rainfall in June.			
	1928	1929	1930	1931	1928	1929	1930	1931	1928	1929	1930	1931	1928	1929	1930	1931	1928	1929	1930	1931*
1	2	3	4	5	6	7	8	9	10	11	12	13	14	15	16	17	18	19	20	21
Champaran ..	1·87	0·08	0·83	0·67	Nil	0·76	0·75	0·68	0·56	0·56	0·42	0·06	2·17	2·90	1·72	1·70	7·40	12·10	7·45	1·87
Muzaffarpur ..	0·90	0·04	0 27	0·80	Nil	0·46	0·60	0 45	0·22	0·93	0·11	0 06	2·17	1·72	1·15	1·08	5·88	9·82	7·21	2·42
Darbhanga ..	0·32	Nil	0·32	0 66	Nil	0·28	0·83	1·06	1·10	0·84	0·26	0 04	3·04	1·20	1·60	1·64	4·89	9 11	6·71	1·85
Bhagalpur ..	0·31	0·07	0·12	1·00	0·00	0·54	0·99	0·59	1·68	1·04	0·27	0·08	2 91	2 32	2 12	1 03	9·29	8·35	7·60	1·69
Purnea ..	0·25	Nil	0 10	0 76	Nil	0 35	1·15	0·57	1·48	0·77	0·34	0·42	5·44	3·38	2·56	3·68	11·59	8·60	7·92	1·74
Santal Parganas	0·18	0·06	0·27	1 74	0·01	1·18	0·88	1·43	0·82	0·95	0·40	0·06	2·78	3·44	1·57	2·20	17·31	7·86	5 64	3·42
Cuttack ..	0 14	1·02	0·06	0 69	0·05	0·32	0·25	0·37	4 39	0·87	0·92	0·90	3·64	1·03	2 81	3·38	12·49	5·70	8·10	6·23
Balasore ..	0·20	1·03	0 27	3·16	0·06	1·80	0·51	1·78	5·03	1·83	0 73	1·73	4·82	1·22	3·58	1·86	13·71	5·77	6·49	0·93

*Figures relate to headquarters only up to 22nd June 1931.

DEPARTMENT OF AGRICULTURE, ASSAM.

PRELIMINARY FORECAST OF THE JUTE CROP OF ASSAM, 1931.

[NOTE.—On the average of the five years ending 1928-29, the area under jute in Assam represents 5·1 per cent. of the total area under jute in British India.]

Character of the season.—The weather generally has been unfavourable for the cultivation and growth of the crop. Heavy rainfall in the months of April and May was injurious to the young plants. Slight damage has also been done by hailstorms in the Goalpara district and by insects in Nowgong district. The present condition of the crop is generally not good, and the prospects are worse than last year in all districts except Nowgong, Garo Hills and Sibsagar, where the outturn is expected to be as good or a little better than last year. These three districts, however, represent about 25 per cent. of the total area in the province.

2. **Area sown.**—The total area under jute, as estimated by the Deputy Commissioners, is 100,500 acres against 230,300 acres of last year. There is a decrease in area in all districts, except Cachar, where the area remains the same as in last year.

3. **Stock.**—According to the reports of the Deputy Commissioners, little jute remains in stock from last year's crop except in Nowgong.

A. G. BIRT,
Director of Agriculture, Assam.

SHILLONG,
The 2nd July 1931.

Statement showing the consolidated acreage figures of jute in Assam, 1931.

Name of province.	Estimated area under jute.			Difference between the preliminary forecast, 1931, and final forecast, 1930.	
	1930		1931	Increase.	Decrease.
	Preliminary.	Final.	Preliminary.		
1	2	3	4	5	6
	Acres.	Acres.	Acres.	Acres.	Acres.
Assam	206,400	230,300	100,500	....	129,800

APPENDIX I.

Preliminary forecast of the jute crop of Assam, 1931.

District	Area under jute.			Difference between the figures now estimated for 1931 and the final of 1930		Whether much, little or no jute remains in the district from the crop of 1930.	Date by which the sowing of the crop generally commenced this year and whether that date was early, normal or late.	Remarks by the Deputy Commissioners.
	Normal.	Final of 1930	Now estimated for 1931.	Increase.	Decrease.			
1	2	3	4	5	6	7	8	9
	Acres.	Acres.	Acres.	Acres.	Acres.			
Cachar ..	300	200	200	..	..	None ..	First week of April. Normal.	The weather at sowing time was not favourable but improved subsequently. The growth of the crop has since been retarded by heavy rainfall. The present condition of the crop is not good.
Sylhet ..	20,000	19,800	11,900	..	7,900	Little ..	Ditto ..	The decrease in area is due to the very dull condition of the jute market The weather at sowing time was not favourable Heavy and continuous rains in April and May also considerably damaged the tender plants. The present condition of the crop is not very good.
Goalpara ..	60,000	101,600	35,200	..	66,400	A small quantity remains.	First part of April. Normal.	The cause of the large decrease in area is due partly to unfavourable weather and partly to the very low price of jute last year The weather was rainy at sowing time and continued so since. The weather is still unfavourable. Also some damage has been done to the crop by hailstorms and excessive rains. The present prospect of the crop is not good.
Kamrup ..	15,000	27,100	13,300	..	13,800	Some jute remains	Beginning of April. Normal.	Excessive rain during the months of March and April and the unusually low price of jute are responsible for the decrease in area. The weather continues to be unfavourable since sowing time—affecting the growth of the crop adversely The present condition of the crop is not generally good.
Darrang ..	12,600	18,600	13,700	..	4,900	Little ..	Ditto ..	The decrease in area is due partly to low price of jute last year and partly to unfavourable weather. The weather was unfavourable at sowing time owing to heavy rain but it has improved now The present condition of the crop is fair.
Nowgong ..	40,000	56,600	20,400	..	36,200	Much jute remains.	First week of March. Early.	Extremely low price of jute is responsible for the large decrease in area. The weather has been generally favourable for the cultivation and growth of the crop. The present condition of the crop is generally good. Some damage to the crop by insects has been reported from places.
Sibsagar ..	300	400	300	..	100	None ..	Middle of April. Normal.	Unfavourable weather conditions account for the decrease in area. The weather was rainy at the sowing time which retarded the growth of the crop but became more favourable afterwards.
Lakhimpur ..	200	1,100	900	..	200	Some jute remains.	First week of April. Normal.	The decrease in area is due to the fact that many people have given up jute cultivation owing to the exceptional fall in price. The weather was favourable in the beginning but has since become too wet. The present condition of the crop is not promising.
Garo Hills (plains)	3,300	4,900	4,600	..	300	None ..	Middle of March. Normal.	The decrease in area is due to dullness of jute market. The weather till now is favourable and the condition of the crop is good.
Total ..	151,700	230,300	100,500	..	129,800			

APPENDIX II.

Statement of rainfall in inches from February to June each year from 1928 to 1931.

District.	Rainfall in February.				Rainfall in March.				Rainfall in April.				Rainfall in May.				Rainfall in June.			
	1928	1929	1930	1931	1928	1929	1930	1931	1928	1929	1930	1931	1928	1929	1930	1931	1928	1929	1930	1931*
1	2	3	4	5	6	7	8	9	10	11	12	13	14	15	16	17	18	19	20	21
	Inches.	Inches.	Inches.	Inches.	Inches.	Inches.	Inches.	Inches.	Inches.	Inches.	Inches.	Inches.	Inches.	Inches.	Inches.	Inches.	Inches.	Inches.	Inches.	Inches.
Cachar	1·18	·08	2·22	1·19	6·23	1·96	5·53	2·63	2·30	23·99	13·65	8 45	21·80	35·44	11·17	18·99	19·34	40·12	34·10	15·84
Sylhet	1·11	·16	1·52	·78	5·58	2·59	5·56	·98	3·34	28 80	10·80	12·44	25·92	35·10	11·37	26·28	18·58	37·63	43·45	20·04
Goalpara	·25	·02	49	·55	·33	3·48	3·21	1·65	7·02	9·89	6·85	10·43	16·72	20·51	10·64	22·47	21·78	26·00	20·85	14·13
Kamrup	20	·02	1 34	·28	1·34	3·83	4·11	2·80	6·64	9·38	7 68	16·25	10·87	20·56	8·24	14·96	11·04	19 45	22·60	11·95
Darrang	·29	·08	·80	·49	1·46	3·32	4·40	2·21	6·90	9·02	6·61	11·25	12·02	19·17	6·16	11·68	11·75	20·69	18·48	13·52
Nowgong	·60	·05	·91	·44	1·11	2·96	3·43	1·50	5·41	5 90	5·01	4·71	9·19	14·45	5·50	9·21	12·52	15·68	10·12	10·80
Sibsagar	·98	·24	1·75	·92	2·32	3·50	3·35	1·67	4·34	11·96	6·74	13·73	11·31	20·95	7·39	10·82	18·46	20·89	13·11	12·25
Lakhimpur	1·36	·54	1·22	2·55	4·59	2·75	3·03	1·81	5·43	10·14	10·55	12·44	16·74	21·86	5·72	11·79	19·94	22·33	27·33	23·17
Garo Hills	·19	·21	1·05	·55	·02	1·40	1·26	1·22	7·27	9·13	2·66	7·45	16·92	17·31	7·27	15·50	15·49	16·92	39·40	22·92

*The figures for June 1931 are only approximate, taken from the weekly weather and crop reports.

Printed at the Bengal Government Press, Alipore, and published by the Bengal Secretariat Book Depot, Writers' Buildings, in the City of Calcutta, on the 16th July 1931.

Registered No. C207

The Calcutta Gazette

Extraordinary

FRIDAY, JULY 17, 1931.

GOVERNMENT OF BENGAL.

Political Department.

Political.

NOTIFICATIONS.

No. 11782P.—16th July 1931.—Whereas by notifications Nos. 927P.D.. 928P.D. and 929P.D., dated the 22nd June 1931, the Governor in Council was pleased to appoint under sub-sections (*1*) and (*2*) of section 4 of the Bengal Criminal Law Amendment Act, 1925—

(*i*) Mr. A. N. Sen, District and Sessions Judge, Faridpur,

(*ii*) Rai Bepin Behari Das Gupta Bahadur, retired Judge of the Small Cause Court,

(*iii*) Khan Sahib Maulvi Akramuzzaman Khan, Deputy Magistrate and Deputy Collector, Faridpur,

as Commissioners for the trial under the said Act of Birendra Nath Roy and others mentioned in the said notifications accused of offences specified in the first schedule to the said Act:

And whereas there is likelihood of a prolonged absence of the said Rai Bepin Behari Das Gupta Bahadur from acting as a Commissioner:

Now, therefore, in exercise of the power conferred by sub-rule (*b*) of rule 4 of the rules made under section 10 of the said Act and published under notification No. 332P., dated the 15th January 1931, and in modification of the said notifications Nos. 927P D., 928P.D. and 929P.D., dated the 22nd June 1931, the Governor in Council is pleased to appoint Mr. Bepin Behari Mukharji, retired District and Sessions Judge, as a Commissioner for the trial of the aforesaid accused, *vice* the said Rai Bepin Behari Das Gupta Bahadur, resigned.

No. 11832P.—16th July 1931.—In exercise of the power conferred by section 99A of the Code of Criminal Procedure, 1898 (Act V of 1898), the Governor in Council hereby declares to be forfeited to His Majesty all copies, wherever found, of a booklet in Bengali entitled "Dinesher Sesh" by Nagendra Nath Das, printed and published from the Aditya Printing Works, 4, Dina Nath Mitra Lane, Calcutta, on the ground that the said booklet contains matter which brings or attempts to bring into hatred or contempt and excites or attempts to excite disaffection towards the Government established by law in British India, the publication of which is punishable under section 124A of the Indian Penal Code.

R. N. Reid,

Chief Secy. to the Govt. of Bengal (offg.).

Printed at the Bengal Government Press, Alipore, and published by the Bengal Secretariat Book Depot, Writers' Buildings, in the City of Calcutta, on the 17th July 1931.

Registered No. C207 *No. 30 of 1931*

SECRETARIAT

The Calcutta Gazette

THURSDAY, JULY 23, 1931.

CONTENTS:

	PAGE
PART I.—Orders and Notifications by the Governor of Bengal, the Government of Bengal, the High Court, Government Treasury, etc.	875—894
PART IA.—Orders and Notifications by the Government of India republished for general information	205—209
PART IB.—Educational Notices ..	809—815
PART II.—Advertisements	673—684
PART III.—Acts of the Bengal Legislative Council	*Nil*
PART IV.—Bills introduced in the Bengal Legislative Council, Reports of Select Committees presented or to be presented to that Council, and Bills published before introduction in that Council .	*Nil*
PART V.—Acts of the Indian Legislature assented to by the Governor General and Ordinances promulgated under section 72 of the Government of India Act ..	*Nil*
PART VI.—Bills introduced in the Council of State and Legislative Assembly, Reports of Select Committees presented to the Council and Assembly and Bills published under Rule 18 of the Indian Legislative Rules	*Nil*
SUPPLEMENT No. 30—	
Cotton Ginning and Pressing—Daily rainfall—Weekly Vital Statistics—Major and Minor Works—Monthly Weather and Crop Report—Weekly Weather and Crop Report—Daily gauge readings—Weekly gauge readings	953—985
Resolution on the Annual Report of the Bengal Smoke Nuisances Commission for the year 1930	986
Resolution on the Report on the Police Administration in the town of Calcutta and its suburbs for the year 1930 ..	987 989

Part I

Orders and Notifications by the Governor of Bengal, the Government of Bengal, the High Court, Government Treasury, etc.

ORDERS BY HIS EXCELLENCY THE GOVERNOR OF BENGAL.

No. 5828A.—13th July 1931.—Under the provisions of section 93 of the Government of India Act, His Excellency the Governor is pleased to accept the resignation tendered by Mr. H. E. Stapleton of his office of member of the Bengal Legislative Council.

No. 5831A.—13th July 1931.—In exercise of the powers conferred by rule 26 (2) of the Bengal Electoral Rules, His Excellency the Governor is pleased to nominate Mr. John Mellor Bottomley, an official, to be a member of the Bengal Legislative Council.

No. 5894A.—15th July 1931.—In exercise of the power conferred on him under clause (*b*) of sub-section (2) of section 72A of the Government of India Act, His Excellency the Governor hereby nominates Mr. A. T. Weston and Mr. S. C. Mitter to be members of the Bengal Legislative Council for the purpose of the Bengal State Aid to Industries Bill, 1930, with effect from this date until the conclusion of proceedings in relation to the Bill.

No. 5979A.—17th July 1931.—In exercise of the power conferred on him under clause (*b*) of sub-section (2) of section 72A of the Government of India Act, His Excellency the Governor hereby nominates Mr. R. Higgins to be a member of the Bengal Legislative Council for the purpose of the Motor Vehicles (Taxation) Bill, 1931, with effect from this date until the conclusion of proceedings in relation to the Bill.

No. 6041A.—20th July 1931.—In exercise of the powers conferred by rule 26 (2) of the Bengal Electoral Rules, His Excellency the Governor is pleased to nominate Maulvi Amin-uz-Zaman Khan, an official, to be a member of the Bengal Legislative Council.

No. 6038A.—20th July 1931. Under the provisions of section 93 of the Government of India Act, His Excellency the Governor is pleased to accept the resignation tendered by Mr. Robert Howell Hutchings, I.C.S., of his office of member of the Bengal Legislative Council.

R. N. REID,
Chief Secy. to the Govt. of Bengal (offg.).

ORDERS BY THE GOVERNMENT OF BENGAL.

No. 6053A.

Appointments and Transfers.

GENERAL.

Tippera.—No. 5307A.—4th July 1931.—Babu Phanindra Nath Mukharji, Deputy Magistrate and Deputy Collector, on leave, is posted to the headquarters station of the Tippera district.

Tippera-Mymensingh.—No. 5310A. — 4th July 1931.—Babu Anil Chandra Basu, Deputy Magistrate and Deputy Collector, Tippera, is transferred to the Jamalpur subdivision of the Mymensingh district.

Mymensingh-Pabna.—No. 5313A.—4th July 1931.—Babu Indu Bhusan Nag, Deputy Magistrate and Deputy Collector, on probation, Jamalpur, Mymensingh, is transferred to the Sirajganj subdivision of the Pabna district.

Presy. Divn.—No. 5884A.—14th July 1931. —Babu Rai Charan Pal, Sub-Deputy Collector, on leave, is posted to the Presidency Division.

Presy. Divn.—No. 5889A.—14th July 1931. —Babu Satyendra Nath Banarji, Sub-Deputy Collector, is posted to the Presidency Division, on relinquishing charge of his duties in the Settlement Department.

Hooghly.—No. 5917A.—16th July 1931.—Mr. Prafulla Chandra Sen, Deputy Magistrate and Deputy Collector, on leave, is posted to the headquarters station of the Hooghly district.

Hooghly-Jalpaiguri. — No. 5920A. — 16th July 1931.—Babu Jiban Chandra Chatarji, Deputy Magistrate and Deputy Collector, Hooghly, is transferred to the headquarters station of the Jalpaiguri district.

Jalpaiguri-Bakarganj.—No. 5923A. — 16th July 1931.— Babu Bishnupada Bhattacharji, Deputy Magistrate and Deputy Collector, Jalpaiguri, is transferred to the Pirojpur subdivision of the Bakarganj district.

Hooghly.—No. 5926A.—16th July 1931.—Babu Jatindra Nath Mitra, Deputy Magistrate and Deputy Collector, Hooghly, is appointed to have charge of the Sadar subdivision of that district.

Bogra.—No. 5928A.—16th July 1931.—Maulvi Abdul Bari, Deputy Magistrate and Deputy Collector, on leave, is posted to the headquarters station of the Bogra district.

Rangpur-Pabna.—No. 5932A.—16th July 1931.—Maulvi Abul Kasem Wajihuddin Ahmad, Deputy Magistrate and Deputy Collector, Rangpur, is appointed to have charge of the Sadar subdivision of the Pabna district.

Pabna-Mymensingh.—No. 5935A. — 16th July 1931.—Maulvi Abu Muhammad Nasiruddin, Deputy Magistrate and Deputy Collector, Pabna, is transferred to the Netrakona subdivision of the Mymensingh district.

Rajshahi-Calcutta. — No. 5943A. — 16th July 1931.—Babu Amulya Kumar Guha, Deputy Magistrate and Deputy Collector, Rajshahi, is appointed to be a Personal Assistant to the Commissioner of the Presidency Division.

2. This cancels the orders of the 4th July 1931, transferring him to the Chandpur subdivision of the Tippera district.

Mymensingh.—No. 5949A.—16th July 1931. —Babu Dhirendra Mohan Gupta, Deputy Magistrate and Deputy Collector, Netrakona, Mymensingh, is appointed temporarily to have charge of that subdivision.

Leave.

GENERAL.

Presy. Divn.—No. 5899A.—15th July 1931. —Babu Nirod Krishna Ray, Deputy Magistrate and Deputy Collector, employed as a Personal Assistant to the Commissioner of the Presidency Division, is allowed leave on average pay for four months, under rule 81 (*b*) (*ii*) of the Fundamental Rules, with effect from the 19th August 1931.

Mymensingh.—No. 5947A.—16th July 1931. —Mr. Birendra Narayan Chakravarty, I.C.S., Joint Magistrate and Deputy Collector, Netrakona, Mymensingh, is allowed leave on average pay for fifteen days, under rule 81 (*b*) (*ii*) of the Fundamental Rules, with effect from the 5th August 1931, or any subsequent date on which he may avail himself of it.

Nadia.—No. 5951A.—16th July 1931.—Maulvi Panaullah Ahmad, Deputy Magistrate and Deputy Collector, Nadia, is allowed leave on average pay for two months, under rule 81 (*b*) (*ii*) of the Fundamental Rules, with effect from the 3rd July 1931, or any subsequent date on which he may avail himself of it.

Pabna.—No. 5960A.—16th July 1931.—Maulvi Manzur Ahmad Chaudhari, Deputy Magistrate and Deputy Collector, Sirajganj, Pabna, is allowed leave on average pay for fifteen days, under rule 81 (*b*) (*ii*) of the Fundamental Rules, with effect from the 20th June 1931, or any subsequent date on which he availed himself of it.

Hooghly.—No. 5992A.—18th July 1931.—Mr. Rangachari Srinivasadesika Krishnaswamy, I.C.S., Assistant Magistrate and Collector, Hooghly, is allowed leave on average pay for three weeks, under rule 81 (*b*) (*ii*) of the Fundamental Rules, with effect from the 4th July 1931.

Noakhali.—No. 5999A.—18th July 1931.—Mr. Birendra Mohan Mitra, I.C.S., officiating District and Sessions Judge, Noakhali, is allowed leave on average pay for eight days, under rule 81 (*b*) (*ii*) of the Fundamental Rules, with effect from the 20th July 1931.

POLICE.

No. 5871A.—14th July 1931.—Babu Narendra Chandra Sen, Deputy Superintendent of Police, is allowed leave for six months, in extension of the leave granted to him under the orders of the 6th June 1931, viz., leave on average pay for four months and eighteen days, under the proviso to rule 81 (*b*) (*ii*) of the Fundamental Rules, and leave on half average pay for the remaining period, under rule 81 (*d*) of those rules.

R. N. REID,
Chief Secy. to the Govt. of Bengal (offg.).

NOTIFICATION.

No. 6008A.—20th July 1931.—The report of the Central Examination Committee having been received, the result of the first half-yearly departmental examination of Assistant Magistrates and others held on the 4th May 1931 and the following three days is published for general information :—

Second or Higher Standard.

(i) The officer named below has passed completely :—

Monoranjan Sarkar.

(ii) The officers named below, who passed partially at previous examinations, have now passed in the remaining subject or subjects mentioned opposite their names :—

Muhammad Husain Ali	.. Accounts.
Shah Abdul Matin	.. Law, Parts II and III, and Accounts.
Abdul Aziz	.. Accounts.
Praphulla Mohan Das Gupta	Accounts.
Rabindra Kumar Mitra, I.C.S.	Law, Part II.
Sailesh Chandra Chatarji	.. Hindustani.
Asit Kumar Biswas	.. Accounts.
Annada Sankar Ray, I.C.S.	.. Law, Parts I and II
Parbati Charan Nandi	.. Law, Part III, and Hindustani.
A C Hartley, I.C.S.	.. Hindustani
Atikar Rahman Mahmud	.. Law, Part II
Nazir Ahmad	.. Law, Part III.
Nirmal Chandra Maitra	.. Law, Parts II and III.
Muhammad Rafique	.. Law, Part III, and Accounts.
Bhupendra Nath Sen	.. Law, Parts II, and III, Accounts and Hindustani.
Bhupendra Kumar Adhikari	Accounts.
Abdul Wadud	.. Law, Parts II, and III
Phanindra Mohan Datta	.. Law, Part II, and Accounts.
Khundkar Abdul Latif	.. Law, Part III, and Accounts.
R. A. Dutch, I.C.S.	.. Law, Parts II and III, Bengali and Hindustani.
Binay Bhusan Chaudhuri	.. Accounts.
Gakul Singh Gahatraj	.. Law, Parts II and III, Accounts and Bengali.

(iii) The following officers have passed partially and are still liable to examination in the subject or subjects noted against their names :—

Names.	Now passed in—	Still liable to examination in—
Santosh Kumar Ghosh	.. Law, Part I, and Accounts	.. Law, Parts II and III, and Hindustani.
Dewan Naimul Haque	.. Law, Part III	.. Law, Parts I and II, and Accounts.
Qnazi Mukhlesar Rahman	.. Law, Part II, and Accounts	.. Law, Part III.
Satish Chandra Acharji	.. Law, Parts I and III	.. Accounts.
S. P. H. Cadman, I.C.S.	.. Law, Parts I and II	.. Law, Part III, Bengali, Accounts and Hindustani.
Chandra Shekhar Mitra	.. Law, Parts I, II and III	.. Accounts and Hindustani
Chandra Madhab De	.. Law, Parts I and II	.. Law, Part III, Accounts and Hindustani.
A. M. Salimullah	.. Law, Part I, and Accounts	.. Law, Parts II and III.
Bhupendra Lal Sen	.. Law, Parts I, II and III	.. Accounts and Hindustani.
Kulada Ranjan Das Sarkar	.. Law, Part I, and Accounts	.. Law, Parts II and III, and Hindustani
Kalipada De Bhaumik	.. Law, Parts I and II	.. Law, Part III, Accounts and Hindustani.
Saroj Bihari De	.. Law, Parts I and II, and Hindustani	Law, Part III, and Accounts.
M. J. Carritt, I.C.S.	.. Law, Part I, and Accounts	.. Law, Parts II and III, Bengali and Hindustani.
R. S. Trivedi, I.C.S.	.. Law, Part I	.. Law, Parts II and III, Accounts, Bengali and Hindustani.
Amal Chandra Mazumdar	.. Accounts and Hindustani	.. Law.
R S. Krishnaswamy, I.C.S.	.. Law, Part I	.. Law, Parts II and III, Accounts, Bengali and Hindustani
Kshitish Chandra Chakrabartti	.. Law, Parts I and II, and Hindustani	Law, Part III, and Accounts.
J. L. Llewellyn, I.C.S.	.. Bengali and Hindustani	.. Law, Part II.
Baneswar Patra	.. Law, Parts II and III, and Accounts	Hindustani.
Muhammad Jasimuddin	.. Accounts	.. Law, Parts II and III.
Salamatulla Akhand	.. Law, Parts I and II, and Accounts	.. Law, Part III.
Kazi Mahabbat Ali	.. Law, Parts I and II, Accounts and Hindustani.	Law, Part III.
Binay Kumar Mukharji	.. Law, Part I, and Accounts	.. Law, Parts II and III.
H. E. Richardson, I.C.S.	.. Law, Parts I and II	.. Law, Part III, Accounts, Bengali and Hindustani.
L. A. Chapman, I.C.S.	.. Bengali	.. Hindustani.
Abdul Hai	.. Law, Part I, Accounts and Hindustani	Law, Parts II and III.
A. K. Ahmad Khan	.. Hindustani	.. Law and Accounts.
Surendra Nath Biswas	.. Law, Part I	.. Law, Parts II and III, Accounts and Hindustani.
P. N McWilliam, I.C.S.	.. Law, Parts I and III	.. Law, Part II, Accounts, Bengali and Hindustani.
A. M. S. Mahmood	.. Law, Parts I, II and III	.. Accounts and Hindustani.
Fazlur Rahman	.. Law, Part I	Law, Parts II and III, Accounts and Hindustani.
Abdul Majid Chaudhuri	.. Ditto	.. Ditto.
Probhas Chandra Pathak	.. Law, Part III	.. Law, Part II.
Radha Ballabh Shaha	.. Accounts.	.. Law, Parts II and III, and Hindustani.
Suresh Chandra Sen Gupta	.. Law, Parts II and III, and Accounts	Hindustani.
Dhiraj Kumar Bhattacharji	.. Law, Parts I and III	.. Law, Part II, Accounts and Hindustani.

Names.	Now passed in—	Still liable to examination in —
Saiyid Muhiuddin Ahmad ..	Law, Part I, and Bengali ..	Law, Parts II and III, and Accounts.
Nirmalkanti Ray Chaudhury, I.C.S. ..	Law and Accounts ..	Hindustani
Sunil Kumar Dey, I.C.S. ..	Law, Parts I and III, and Accounts ..	Law, Part II, and Hindustani.
Aziz Ahmed, I.C.S. ..	Law and Accounts ..	Bengali.
F. O Bell, I.C.S. ..	Law, Parts I and II, and Accounts ..	Law, Part III, Bengali and Hindustani.
Saiyid Abul Fazl Muhammad Abdus Sobhan.	Law, Parts I and II, Accounts, Bengali and Hindustani.	Law, Part III
Sudhendu Kumar Das ..	Law, Part I ..	Law, Parts II and III, Accounts and Hindustani.
Sirajul Karim ..	Law and Hindustani ..	Accounts.

(iv) The following Police officers have passed in the subject or subjects mentioned opposite their names :—

Muhammad Aboo Abdullah	Hindustani.
E. T. D. Lambert ..	Police Law without books.
P L Mehta ..	Bengali and Hindustani.
Naresh Kumar Bhattacharji	Hindustani.
J. M. G. Cook ..	Police Law without books.
R. E. R Parson ..	Ditto.
Hyder Hossain ..	Police Law without books and Hindustani.
Rebati Mohan Sen ..	Police Law with and without books and Hindustani

(v) The following Forest officers have passed in Forest Law and Land Revenue :—

V. S. Rao.
T. V. Dent.

(vi) The following Educational officer has passed in Bengali :—

Miss Florence D. Morrison.

(vii) The following Public Works Department officer has passed in Hindustani :—

Dhirendra Nath Chakrabatti.

(viii) The following Irrigation officers have passed in Hindustani :—

Sachindra Chandra Aich.
J. Mackie.

(ix) The following Excise officer has passed in the subjects noted against his name :—

Muhammad Muktar Ahmad Chowdhury.	Excise Law with books, Accounts and Hindustani.

First or Lower Standard.

(i) The following officers have passed completely :—

Chandra Shekar Mitra.
Chandra Madhab De.
Bhupendra Lal Sen
Monoranjan Sarkar.
Kalipada De Bhaumik.
Saroj Behari De.
R. S. Trivedi, I.C.S.
Amal Chandra Mazumdar.
Kshitish Chandra Chakravartti
R. S. Krishnaswamy, I.C.S.
Salamatulla Akhand.
H E. Richardson, I.C.S.
Abul Khair Ahmad Khan.
Surendra Nath Biswas.
P. N McWilliam, I.C.S.
A. M. S. Mahmood.
Abdul Majid Chaudhuri.
Aziz Ahmed, I.C.S.
Saiyid Abul Fazl Muhammad Abdus Sobhan.
Sudhendu Kumar Das.
Serajul Karim.

(ii) The undermentioned officers, who passed partially at previous examinations, have now passed in the remaining subject mentioned against their names :—

Santosh Kumar Ghosh ..	Law, Part II.
Dewan Naimal Haque ..	Ditto.
A. M. Salimullah ..	Ditto.
Baneswar Patra ..	Ditto.
Charu Chandra Chatarji ..	Ditto.
Kazi Mahabbat Ali ..	Ditto.
Gakul Singh Gahatraj ..	Ditto.
Radha Ballabh Shaha ..	Ditto.
Suresh Chandra Sen Gupta	Ditto.
Dhiraj Kumar Bhattacharji	Ditto.

(iii) The following officers have passed partially and are still liable to examination in the subject noted against their names :—

Names.	Now passed in—	Still liable to examination in—
Binay Kumar Mukharji ..	Law, Part I ..	Law, Part II.
Shamsuddin Ahmad ..	Ditto ..	Ditto.
Abdul Hai ..	Ditto ..	Ditto.
Fazlur Rahman ..	Ditto ..	Ditto.
Saiyed Muhiuddin Ahmad ..	Law, Part I, and Bengali ..	Ditto.

(iv) The following Police officers have passed in the subject or subjects noted against their names :—

J. M. G. Cook ..	Police Law without books.
R. E. R Parsons ..	Ditto.
Hyder Hussain ..	Police Law without books and Bengali.
Rebati Mohan Sen ..	Police Law without books.

(v) The following Irrigation officer has passed in Canal Law, Part C :—

Indu Bhusan De.

(vi) The following I. M. S. officer has passed in Bengali (Colloquial test).

Dr. W. A. Browne.

R. N. REID,
Chief Secy. to the Govt. of Bengal (offg.).

POLITICAL DEPARTMENT.

Political.

NOTIFICATION.

No. 11925P.—18th July 1931.—In exercise of the power conferred by section 99A of the Code of Criminal Procedure, 1898 (Act V of 1898), the Governor in Council hereby declares to be forfeited to His Majesty all copies, wherever found, of a picture styled "Swadhinata Dibas" (Independence Day) printed at the Saraswati Press, Calcutta, on the ground that the said picture contains matter which brings or attempts to bring into hatred or contempt and excites or attempts to excite disaffection towards the Government established by law in British India, the publication of which is punishable under section 124A of the Indian Penal Code.

Jails.

NOTIFICATION.

No. 2675P.J.—17th July 1931.—Lieutenant-Colonel R. E. Flowerdew, I.M.S., is confirmed as Inspector-General of Prisons, Bengal, with effect from the 9th March 1931.

R. N. REID,
Chief Secy. to the Govt. of Bengal (offg.).

JUDICIAL DEPARTMENT.

No. 6054A.

Powers.

Dinajpur.—No. 5878A.—14th July 1931.—Maulvi Muhammad Mohsin, Sub-Deputy Magistrate, Dinajpur, is vested with the powers of a Magistrate of the second class.

24-Parganas.—No. 5902A.—15th July 1931.—Babu Harendra Nath Datta, Deputy Magistrate, Sealdah, 24-Parganas, is vested with powers under section 524 of the Code of Criminal Procedure.

24-Parganas.—No. 5904A.—15th July 1931.—In exercise of the power conferred by sub-section (*1*) of section 5 of the Bengal Borstal Schools Act, 1928 (Act I of 1928), the Governor in Council is pleased to invest Babu Harendra Nath Datta, Deputy Magistrate, Sealdah, 24-Parganas, with the powers necessary for carrying out the purposes of the said section.

R. N. REID,
Chief Secy. to the Govt. of Bengal (offg.).

Appointments and Transfers.

Mymensingh.—No. 5346J.—14th July 1931.—In exercise of the powers conferred by sections 14 and 15 and the proviso to section 357 of the Code of Criminal Procedure, 1898 (Act V of 1898), the Governor in Council is pleased—

(*a*) to confer upon Maulvi Mir Abdul Ghafur the powers of a Magistrate of the third class, in the district of Mymensingh, for a period of three years from the date of this notification,

(*b*) to direct him to sit as a member of the Sadar bench in the said district, and

(*c*) to direct him to take down evidence in the English language.

Hooghly-24-Parganas.—No. 5348J.—14th July 1931.—Babu Basanta Kumar Ray, officiating Subordinate Judge, Howrah, in the district of Hooghly, is appointed, on reversion, to be a munsif in the district of the 24-Parganas, to be ordinarily stationed at Alipore.

Murshidabad.—No. 5350J.—14th July 1931.—In exercise of the powers conferred by sections 14 and 15 and the proviso to section 357 of the Code of Criminal Procedure, 1898 (Act V of 1898), the Governor in Council is pleased—

(*a*) to confer upon Haji Maulvi Muhammad Ayub the powers of a Magistrate of the third class, in the district of Murshidabad, for a period of three years from the 14th July 1931, in respect to such cases as may be made over to him within the limits of the Sadar subdivision of the said district,

(*b*) to direct that he shall, in addition to sitting singly, sit as a member of the Sadar bench in the said district, and

(*c*) to direct him to take down evidence in the English language.

Calcutta.—No. 5365J.—15th July 1931.—In exercise of the powers conferred by sub-section (*4*) of section 18 of the Code of Criminal Procedure, 1898 (Act V of 1898), the Governor in Council is pleased to appoint Khan Bahadur Maulvi Muhammad Fazlal Karim, Deputy Magistrate and Deputy Collector, to act as Additional Chief Presidency Magistrate, Calcutta, with effect from the 1st August 1931, and to authorise him to exercise the following powers of a Chief Presidency Magistrate:—

(1) to release prisoners bound down, to reduce amounts of security and number of sureties and to cancel bonds under sections 124 and 125, Criminal Procedure Code;

(2) to issue injunctions under section 144, Criminal Procedure Code;

(3) to transfer cases under section 192, Criminal Procedure Code;

(4) to entertain complaints under section 476, Criminal Procedure Code, made by other courts in certain cases requiring such complaints under section 195, Criminal Procedure Code;

(5) to endorse warrants of attachment of property in his jurisdiction under section 514, clause (*3*) of the Criminal Procedure Code; and

(6) to withdraw cases under section 528 of the Criminal Procedure Code.

Faridpur.—No. 5379J.—16th July 1931.—In exercise of the powers conferred by sections 14 and 15 and the proviso to section 357 of the Code of Criminal Procedure, 1898 (Act V of 1898), the Governor in Council is pleased—

(*a*) to confer upon Babu Trailokya Nath Saha the powers of a Magistrate of the second class, in the district of Faridpur, for a period of three years from the 25th August 1931, in respect to such cases as may be made over to him within the limits of the Goalundo subdivision of the said district,

(*b*) to direct that he shall, in addition to sitting singly, sit as a member of the Goalundo bench in the said district, and

(*c*) to direct him to take down evidence in the English language.

Faridpur.—No. 5381J.—16th July 1931.—In exercise of the powers conferred by sections 14 and 15 and the proviso to section 357 of the Code of Criminal Procedure, 1898 (Act V of 1898), the Governor in Council is pleased—

(*a*) to confer upon Maulvi Khondkar Afsaruddin Ahmed the powers of a Magistrate of the third class, in the district of Faridpur, for a period of three years from the 19th August 1931, in respect to such cases as may be made over to him within the limits of the Gopalganj subdivision of the said district,

(*b*) to direct that he shall, in addition to sitting singly, sit as a member of the Gopalganj bench in the said district, and

(*c*) to direct him to take down evidence in the English language.

Howrah.—No. 5383J.—16th July 1931.—In exercise of the powers conferred by sections 14 and 15 and the proviso to section 357 of the Code of Criminal Procedure, 1898 (Act V of 1898), the Governor in Council is pleased—

(*a*) to confer upon Babu Pulin Ranjan Basu the powers of a Magistrate of the third class, in the district of Howrah, for a period of three years from the 14th August 1931, in respect to such cases as may be made over to him within the limits of the Uluberia subdivision of the said district,

(*b*) to direct that he shall, in addition to sitting singly, sit as a member of the Amta bench in the said district, and

(*c*) to direct him to take down evidence in the English language.

24-Parganas.—No. 5447J.—16th July 1931.—In exercise of the powers conferred by sections 14 and 15 and the proviso to section 357 of the Code of Criminal Procedure, 1898 (Act V of 1898), the Governor in Council is pleased—

(*a*) to confer upon Maulvi Syed Nazra Moslem the powers of a Magistrate of the second class, in the district of the 24-Parganas, for a period of two years from the 5th August 1931, in respect to such cases as may be made over to him within the limits of the Barasat subdivision of the said district,

(*b*) to direct that he shall, in addition to sitting singly, sit as a member of the Barasat bench in the said district, and

(*c*) to direct him to take down evidence in the English language.

Burdwan.—No. 5449J.—16th July 1931.—In exercise of the powers conferred by sections 14 and 15 and the proviso to section 357 of the Code of Criminal Procedure, 1898 (Act V of 1898), the Governor in Council is pleased—

(*a*) to confer upon Babu Shamal Das Khannah the powers of a Magistrate of the third class, in the district of Burdwan, for a period of three years from the 4th August 1931, in respect to such cases as may be made over to him within the limits of the Sadar subdivision of the said district,

(*b*) to direct that he shall, in addition to sitting singly, sit as a member of the Sadar bench in the said district, and

(*c*) to direct him to take down evidence in the English language.

Midnapore.—No. 5451J.—16th July 1931.—Babu Kalyan Kumar Das Gupta, munsif of Tamluk, in the district of Midnapore, is appointed temporarily to be a munsif in the same district, to be ordinarily stationed at Jhargram, during the absence, on leave, of Babu Harendra Nath Banarji.

Leave.

Calcutta.—No. 5295J.—11th July 1931.—Mr. Nagendra Nath Gupta, Bar.-at-Law, Municipal Magistrate, Calcutta, is allowed leave on half average pay for the period from the 1st July 1931 to the 4th July 1931, under rule 81 (*d*) of the Fundamental Rules, in extension of the leave already granted to him, under notification No. 4032J., dated the 15th May 1931.

Bakarganj.—No. 5411J.—23rd June 1931.—Babu Shailesh Chandra Banarji, munsif of Pirojpur, in the district of Bakarganj, is allowed leave on average pay for one month, under rules 81 (*b*) (*ii*) and 82 (*b*) of the Fundamental Rules, with effect from the 10th June 1931.

Murshidabad.—No. 5412J.—23rd June 1931. Babu Manmatha Nath Ghatak, munsif of Kandi, in the district of Murshidabad, is allowed leave on average pay for sixteen days, under rules 81 (*b*) (*ii*) and 82 (*b*) of the Fundamental Rules, with effect from the 15th June 1931.

Tippera.—No. 5413J.—26th June 1931.—Babu Renupada Mukharji, munsif of Kasba, in the district of Tippera, is allowed leave on average pay for the period from the 14th September to the 10th October 1931, under rules 81 (*b*) (*ii*) and 82 (*b*) of the Fundamental Rules, and also permitted to affix the Civil Court vacation of 1931 to the leave, under rule 82 (*d*) of those rules.

Chittagong.—No. 5414J.—27th June 1931.—Maulvi Abdul Maleque, officiating munsif of North Raojan, in the district of Chittagong, is allowed leave for two months, with effect from the 10th June 1931, viz., leave on half pay for one month and twenty-two days, under Subsidiary Rule 275 (*a*) of the Fundamental Rules and the exception thereunder, and in continuation extraordinary leave for nine days, under Subsidiary Rule 275 (*c*) of those rules.

NOTIFICATIONS.

Dacca.—No. 5415J.—16th July 1931.—In exercise of the power conferred by section 65 of the Bengal Village Self-Government Act, 1919 (Bengal Act V of 1919), the Governor in Council is pleased to appoint the following members of the union boards mentioned below to be, during their term of office as such members, union benches within the jurisdiction of the union boards of which they are, respectively, members for the purposes of that section :—

Manikganj subdivision, district Dacca.

Manikganj police-station.

Jaigir union board.

Munshi Mofizuddin Ahmad.
Munshi Mohorali Bepari.
Babu Prafulla Chandra Some.
Babu Adhar Chandra Sarkar.

Saturia police-station.

Daragram union board.

Babu Nityananda Mandal.
Babu Jogendra Kumar Saha.
Munshi Nazimuddin Ahmed.
Munshi Palan Khan.

Dacca.—No. 5416J.—16th July 1931.—In exercise of the power conferred by section 73 of the Bengal Village Self-Government Act, 1919 (Bengal Act V of 1919), the Governor in Council is pleased to appoint the following members of the union boards mentioned below to be, during their term of office as such members, union courts within the jurisdiction of the union boards of which they are, respectively, members for the purposes of that section :—

Manikganj subdivision, district Dacca.

Manikganj police-station.

Jaigir union board.

Munshi Mofizuddin Ahmad.
Munshi Mohorali Bepari.
Babu Prafulla Chandra Some.
Babu Adhar Chandra Sarkar.

Saturia police-station.

Daragram union board.

Babu Nityananda Mandal.
Babu Jogendra Kumar Saha.
Munshi Nazimuddin Ahmed.
Munshi Palan Khan.

Tippera.—No. 5430J.—16th July 1931.—In exercise of the power conferred by section 65 of the Bengal Village Self-Government Act, 1919 (Bengal Act V of 1919), the Governor in Council is pleased to appoint the following members of the union boards mentioned below to be, during their term of office as such members, union benches within the jurisdiction of the union boards of which they are, respectively, members for the purposes of that section :—

Sadar subdivision, district Tippera.

Police-station Daudkandi.

Jagatpur union board.

Babu Pandab Chandra Nath Bhoumik.
Munshi Nowab Ali Mea.
Munshi Chandali Sarkar.
Munshi Rajjabali Sarkar.
Munshi Muhammadali Sarkar.

Bhoberchar union board.

Munshi Alfazaddin Mea.
Babu Prosanna Kumar Sarkar.
Munshi Ibrahim Sarkar.
Munshi Akbar Ali.

Rangpur.—No. 5455J.—16th July 1931.—In exercise of the power conferred by section 65 of the Bengal Village Self-Government Act, 1919 (Bengal Act V of 1919), the Governor in Council is pleased to appoint the following members of the union boards mentioned below to be, during their term of office as such members, union benches within the jurisdiction of the union boards of which they are, respectively, members for the purposes of that section :—

Kurigram subdivision, district Rangpur.

Police-station Ulipur

Ulipur union board.

Babu Nitai Dayal Basu.
Babu Sarat Chandra Barman.
Dr. Sonaulla Mahammad.

Police-station Chilmari.

Dr. Ekramuddin Mandal.
Babu Kamini Kumar De.
Babu Bidyadhar Sarkar.

Police-station Nageswari.

Nageswari union board.

Babu Jogesh Chandra Thakurtha.
Babu Jogendra Bardhan.
Munshi Ashar Mamud Bepari.

Nunkhawa union board

Babu Sarada Prosad Lahiri.
Babu Santak Chand Oswal
Munshi Manser Ali Mandal

Calcutta-Howrah-24-Parganas.—No. 5419J. 16th July 1931.—In exercise of the power conferred by sub-section (2) of section 1 of the Bengal Children Act, 1922 (Bengal Act II of 1922), the Governor in Council is pleased to direct that with effect from the date of the publication of this notification the provisions of the said Act, with the exception of the following sections, shall come into force in the town of Calcutta, the suburbs of Calcutta, the port of Calcutta, the municipality of Howrah, the police-stations of Bally, Jagacha, Sankrail and Domjur in the district of Howrah, and the police-stations of Baranagore, Barrackpore, Tittagarh, Noapara, Khardah, Naihati and Jagatdal in the district of the 24-Parganas, namely:—

Section 27 (1) (i) (ii) (iii) (a) (b) (c) (d) (e) and (f).

Section 27 (2) (a) (b) (c) (d) and (f).

Section 28 (2).

2. Notification No. 5045J., dated the 5th June 1929, is hereby cancelled.

Dacca.—No. 5436J.—16th July 1931.—In exercise of the power conferred by section 65 of the Bengal Village Self-Government Act, 1919 (Bengal Act V of 1919), the Governor in Council is pleased to appoint the following members of the Karimpur union board within the Narsingdi police-station in the Narayanganj subdivision of the Dacca district, to be, during their term of office as such members, a union bench within the jurisdiction of the said union board for the purposes of that section:—

Maulvi Muhammad Sekandar Ali.
Munshi Iyakub Ali Sarkar.
Babu Rajani Kanta Sutradhar.

Dacca.—No. 5437J.—16th July 1931.—In exercise of the power conferred by section 73 of the Bengal Village Self-Government Act, 1919 (Bengal Act V of 1919), the Governor in Council is pleased to appoint the following members of the Karimpur union board within the Narsingdi police-station in the Narayanganj subdivision of the Dacca district, to be, during their term of office as such members, a union court within the jurisdiction of the said union board for the purposes of that section:—

Maulvi Muhammad Sekandar Ali.
Munshi Iyakub Ali Sarkar.
Babu Rajani Kanta Sutradhar.

Burdwan.—No. 5465J.—18th July 1931.—In exercise of the power conferred by section 65 of the Bengal Village Self-Government Act, 1919 (Bengal Act V of 1919), the Governor in Council is pleased to appoint Babu Ram Prasanna Mukharji, a member of the Baghar union board within the Burdwan police-station in the Sadar subdivision of the Burdwan district, to be, during his term of office as such member, a member of the union bench within the jurisdiction of the said union board for the purposes of that section.

Burdwan.—No. 5466J.—18th July 1931.—In exercise of the power conferred by section 73 of the Bengal Village Self-Government Act, 1919 (Bengal Act V of 1919), the Governor in Council is pleased to appoint Babu Ram Prasanna Mukharji, a member of the Baghar union board within the Burdwan police-station in the Sadar subdivision of the Burdwan district, to be, during his term of office as such member, a member of the union court within the jurisdiction of the said union board for the purposes of that section.

Dacca. — No. 5500J. — 20th July 1931.—In exercise of the power conferred by section 65 of the Bengal Village Self-Government Act, 1919 (Bengal Act V of 1919), the Governor in Council is pleased to appoint the following members of the Barodi union board within the Baidyerbazar police-station in the Narayanganj subdivision of the Dacca district, to be, during their term of office as such members, a union bench within the jurisdiction of the said union board for the purposes of that section:—

Babu Jitendra Nath Dhar.
Babu Bishwambar Saha.
Maulvi Abdus Sahad Mia.
Munshi Asgar Ali.

2. This notification will take effect from the date of the first meeting of the reconstituted union board at which a quorum is present.

Dacca.—No. 5501J. — 20th July 1931.—In exercise of the power conferred by section 73 of the Bengal Village Self-Government Act, 1919 (Bengal Act V of 1919), the Governor in Council is pleased to appoint the following members of the Barodi union board within the Baidyerbazar police-station in the Narayanganj subdivision of the Dacca district, to be, during their term of office as such members, a union court within the jurisdiction of the said union board for the purposes of that section:—

Babu Jitendra Nath Dhar.
Babu Bishwambar Saha.
Maulvi Abdus Sahad Mia.
Munshi Asgar Ali.

2. This notification will take effect from the date of the first meeting of the reconstituted union board at which a quorum is present.

J. W. NELSON,
Secy. to the Govt. of Bengal.

LOCAL SELF-GOVERNMENT DEPARTMENT.

NOTIFICATIONS.

Minister-in-charge: The Hon'ble Mr. Bijoy Prasad Singh Roy.

24-Parganas.—No. 2673M.—13th July 1931.—In exercise of the power conferred by section 27 of the Bengal Municipal Act, 1884 (Bengal Act III of 1884), the Government of Bengal (Ministry of Local Self-Government) are pleased to appoint Mr. A. Donald as a Commissioner of the Kamarhati Municipality, in the district of the 24-Parganas, *vice* Mr. E. F. Mackenzie, resigned.

24-Parganas.—No. 2675M.—14th July 1931.—In exercise of the power conferred by subseciton (2) of section 241 of the Bengal Municipal Act, 1884 (Bengal Act III of 1884), the Government of Bengal (Ministry of Local Self-Government) are pleased to sanction the rules framed by the Commissioners of the South Dum Dum Municipality, in the district of the 24-Parganas, and published for information with notification No. 1619M., dated the 15th April 1931.

Murshidabad.—No. 2702M. — 16th July 1931.—In exercise of the power conferred by clause (*a*) of section 59 of the Bengal Municipal Act, 1884 (Bengal Act III of 1884), the Government of Bengal (Ministry of Local Self-Government) are pleased to approve the resolution passed by the Commissioners of the Dhulian Municipality in the district of Murshidabad under section 23 of that Act, electing Babu Sachindra Nath Roy, to be their Chairman.

ERRATUM.

No. 2677L. S.-G.—14th July 1931.—In the table appended to notification No. 9531L.S.-G., dated the 6th March 1931, published at pages 288-289 of Part I of the *Calcutta Gazette*, dated the 12th March 1931, make the following correction:—

Page 289, column 2 of the table showing the mauzas constituting the Maurat union, *read* Kazialgang ... 264 *for* Kazialganj ... 264.

Medical.

Minister-in-charge: The Hon'ble Mr. Bijoy Prasad Singh Roy.

Chittagong.—No. 2192Medl.—13th July 1931.—Dr. Rai Jnanendra Nath Chatterji Bahadur, officiating Civil Surgeon, Chittagong, is granted leave on average pay for four months, under Fundamental Rule 81 (*b*) (*ii*), with effect from the date on which he is relieved.

Calcutta.—No. 2210Medl.—14th July 1931.—Dr. Beni Madhab Chakravarti, Assistant Professor of Physics and Chemistry, Medical College, Calcutta, is granted leave on average pay, on medical certificate, for three months and ten days, under the proviso to rule 81 (*b*) (*ii*) of the Fundamental Rules, in extension of the leave already granted to him.

Calcutta.—No. 2212Medl.—14th July 1931.—Temporary Assistant Surgeon Dr. Manindra Priya Taluqdar, on supernumerary duty at the Medical College Hospitals, Calcutta, is appointed as Emergency Officer at that institution, *vice* Dr. Pulin Behari Bhattacherji.

Calcutta-Hooghly.—No. 2213Medl.—14th July 1931.—Assistant Surgeon Dr. Pulin Behari Bhattacherji, Emergency Officer, Medical College Hospitals, Calcutta, is posted to the Arambagh subdivision and dispensary in the district of Hooghly, *vice* Temporary Assistant Surgeon Dr. Prabhat Kumar Biswas.

Hooghly-Calcutta.—No. 2214Medl.—14th July 1931.—Temporary Assistant Surgeon Dr. Prabhat Kumar Biswas of the Arambagh subdivision and dispensary in the district of Hooghly is appointed as Second House Surgeon, Eye Infirmary, Medical College Hospitals, Calcutta, *vice* Dr. Muhammad Rafatulla.

Calcutta.—No. 2215Medl.—14th July 1931.—Dr. Muhammad Rafatulla, Second House Surgeon, Eye Infirmary, Medical College Hospitals, Calcutta, is appointed as First House Surgeon, Eye Infirmary, *vice* Dr. Hemanta Kumar Indra.

Rajshahi.—No. 2217Medl.—14th July 1931.—Assistant Surgeon Dr. Tara Prasad Singha, Medical Officer in charge of Nator subdivision and dispensary, is granted leave on average pay for three months (entirely on account of privilege leave), under Fundamental Rule 81 (*b*) (*ii*), with effect from the 15th May 1931.

Calcutta.—No. 2242Medl.—16th July 1931.—Dr. Pramathes Kumar Bhattacherji, on reversion from the Eastern Bengal Railway, is appointed as Senior Demonstrator of Practical Pharmacy, Medical College, Calcutta, with effect from the 20th June 1931, *vice* Dr. Ramani Mohan Mukherji.

Calcutta.—No. 2243Medl.—16th July 1931.—Dr. Ramani Mohan Mukherji, Senior Demonstrator of Practical Pharmacy, Medical College, Calcutta, is placed on supernumerary duty at the Medical College Hospitals, Calcutta, with effect from the 20th June 1931.

Dinajpur.—No. 2245Medl.—16th July 1931.—Dr. Bama Charan Karmakar, Assistant Surgeon, Dinajpur Sadar, is granted leave on average pay for two months, under Fundamental Rule 81 (*b*) (*ii*), with effect from the 10th June 1931.

This cancels notification No. 1648Medl., dated the 20th May 1931.

C. W. GURNER,
Secy. to the Govt. of Bengal.

EDUCATION DEPARTMENT.

NOTIFICATION.

Minister-in-charge: The Hon'ble Mr. K. Nazim-ud-Din, C.I.E.

Calcutta.—No. 1943Edn.—20th July 1931.—Babu Sadananda Bhaduri, Lecturer in Sanskrit and Bengali, Presidency College, Calcutta, is appointed to act in the Bengal Educational Service as Professor of Sanskrit and Pali in that college, with effect from the date on which he assumes charge of the duties of the post, during the absence, on leave, of Babu Nilmani Chakrabatti, or until further orders.

Registration.

NOTIFICATIONS.

Minister-in-charge: The Hon'ble Mr. K. Nazim-ud-Din, C.I.E.

Calcutta.—No. 592Regn.—16th July 1931.—Khan Sahib Maulvi Abdul Majid, Registrar of Calcutta, was allowed leave on average pay for ten days, under rule 81 (*b*) (*ii*) of the Fundamental Rules, in extension of the leave already granted to him.

Pabna.—No. 595Regn.—16th July 1931.—Babu Kunja Bihari Mukharji, Sadar Sub-Registrar of Pabna, is allowed leave on average pay for one month (of which twenty days on account of privilege leave at credit), under rule 81 (*b*) (*ii*) of the Fundamental Rules, in extension of the leave already granted to him.

A. J. DASH,
Secy. to the Govt. of Bengal.

Orders by the Inspector-General of Registration, Bengal.

Nadia-Pabna.—No. 458.—13th July 1931.—Babu Brojendra Nath Sarkar, Sub-Registrar attached to Nadia, under orders of transfer to Pabna, is allowed leave on average pay for eighteen days, under rule 81 (*b*) (*ii*) of the Fundamental Rules, in extension of the leave granted to him in this department notification No. 301, dated the 7th May 1931.

Bakarganj.—No. 459.—13th July 1931.—Babu Ramesh Chandra Mukharji, Sub-Registrar of Bhola, in the district of Bakarganj, is allowed leave on average pay for one day, viz., on the 30th May 1931, under rule 81 (*b*) (*ii*) of the Fundamental Rules.

Dacca.—No. 460.—13th July 1931.—Babu Rabindra Lal Acharya, Sub-Registrar attached to Dacca, on leave, is appointed to be Sub-Registrar of Rupganj in the same district.

Dacca.—No. 461.—13th July 1931.—Babu Suresh Chandra Rai, Sub-Registrar of Rupganj, in the district of Dacca, is appointed to be Sub-Registrar of Manikganj in the same district.

Dacca-Faridpur.—No. 462.—13th July 1931.—Babu Profulla Chandra Sen, No. I, Sub-Registrar of Manikganj, in the district of Dacca, is appointed to be Sub-Registrar of Kotalipara, in the district of Faridpur.

Dacca-Bakarganj.—No. 463.—13th July 1931.—Maulvi Muhammad Bazlur Rahman, Sub-Registrar, on leave, under orders of transfer to Nazirpur, Bakarganj, is appointed to be Sub-Registrar of Manohardi, in the district of Dacca.

Dacca-Bakarganj.—No. 464.—13th July 1931.—Maulvi Naziruddin Muhammad, No. II, Sub-Registrar of Manohardi, in the district of Dacca, on leave, is appointed to be Sub-Registrar of Nazirpur, in the district of Bakarganj.

Mymensingh.—No. 465.—13th July 1931.—Maulvi Abul Hashem Fazlal Karim Khan, Sub-Registrar of Pakulla, in the district of Mymensingh, is allowed leave on average pay for one month, under rule 81 (*b*) (*ii*) of the Fundamental Rules, with effect from the 11th May 1931.

Mymensingh.—No. 466.—13th July 1931.—Maulvi Khalilur Rahman Khan Eusofji, Probationary Sub-Registrar of Mymensingh, acted as Sub-Registrar of Pakulla in the same district from the afternoon of the 21st May 1931 to the 18th June 1931, during the absence, on leave, of Maulvi Abul Hashem Fazlal Karim Khan, Sub-Registrar.

Dacca-Bakarganj.—No. 467.—13th July 1931.—Maulvi Muhammad Bazlur Rahman, Sub-Registrar, under orders of transfer to Nazirpur, Bakarganj, is allowed leave on average pay for one month, under rule 81 (*b*) (*ii*) of the Fundamental Rules, in extension of the leave granted to him in this department notification No. 423, dated the 20th June 1931.

Mymensingh.—No. 468.—15th July 1931.—Maulvi Abu Yusuf Wahidul, Sub-Registrar, on leave, is appointed to be Sub-Registrar of Jamalpur, in the district of Mymensingh, with effect from the 7th March 1931, during the absence, on leave, of Babu Sadananda Sen, the permanent incumbent, or until further orders.

Mymensingh.—No. 469.—15th July 1931.—Babu Sadananda Sen, Sub-Registrar of Jamalpur, in the district of Mymensingh, is allowed leave on average pay for one month, under rule 81 (*b*) (*ii*) of the Fundamental Rules, in extension of the leave granted to him in this department notification No. 149, dated the 25th February 1931.

Nadia-Rangpur.—No. 470.—15th July 1931.—Babu Kshitindra Nath Mukharji, Sub-Registrar of Mirpur, in the district of Nadia, on being relieved of his appointment as Sub-Registrar of Domar, Rangpur, is allowed leave on average pay for thirteen days, under rule 81 (*b*) (*ii*) of the Fundamental Rules, in extension of the leave granted to him in this department notification No. 317, dated the 14th May 1931.

Howrah.—No. 471.—15th July 1931.—Mr. Birendra Krishna Basu, Sub-Registrar of Ulubaria, in the district of Howrah, is allowed leave on average pay for fourteen days, under rule 81 (*b*) (*ii*) of the Fundamental Rules, with effect from the date on which he may be relieved.

Calcutta-Howrah.—No. 472.—15th July 1931.—Maulvi Shahjehan Muhammad Abdul Mayeed, Probationary Sub-Registrar of Calcutta, is appointed to act as Sub-Registrar of Ulubaria, in the district of Howrah, with effect from the date on which he joins the appointment, during the absence, on leave, of Mr. Birendra Krishna Basu, the permanent incumbent, or until further orders.

Calcutta-Jessore.—No. 473. — 15th July 1931.—This department notification No. 457, dated the 11th July 1931, appointing Babu Saurendra Nath Sen, Probationary Sub-Registrar of Calcutta, to act as Sub-Registrar of Narail, Jessore, *vice* Babu Jatindra Nath Basu, Sub-Registrar, on leave, is cancelled.

Jessore-Faridpur.—No. 474. — 16th July 1931.—Maulvi Abdul Khaleque Khan, Sub-Registrar of Harinakund, in the district of Jessore, is allowed leave on average pay for one month and twenty-one days, under rule 81 (*b*) (*ii*) of the Fundamental Rules, in extension of the leave granted to him in this department notification No. 325, dated the 14th May 1931.

Dinajpur.—No. 475.—16th July 1931.—Babu Sashadhar Pramanik, Sub-Registrar of Pirganj, in the district of Dinajpur, is allowed leave on average pay for fourteen days, under rule 81 (*b*) (*ii*) of the Fundamental Rules, with effect from the 11th May 1931.

Dinajpur.—No. 476.—16th July 1931.—Maulvi Tajuddin Ahmad, Probationary Sub-Registrar of Dinajpur, acted as Sub-Registrar of Pirganj in the same district from the 14th to 24th May 1931, during the absence, on leave, of Babu Sashadhar Pramanik, the permanent incumbent.

Burdwan.—No. 477.—16th July 1931.—Babu Dhirendra Nath Banarji, Sub-Registrar of Purbasthali, in the district of Burdwan, is allowed leave on average pay for ten days, under rule 81 (*b*) (*ii*) of the Fundamental Rules, with effect from the 7th May 1931.

Burdwan.—No. 478.—16th July 1931.—Babu Chandi Charan Basu, Sub-Registrar attached to Burdwan, acted as Sub-Registrar of Purbasthali, in the district of Burdwan, from the 13th to 16th May 1931, during the absence, on leave, of Babu Dhirendra Nath Banarji, Sub-Registrar.

S. AHMAD,
Inspector-General of Regn., Bengal.

FINANCE DEPARTMENT.

Audit.

ADDENDA AND CORRIGENDA.

No. 2907F.—18th July 1931.—The following corrections, which have been authorised, are published for general information:—

The Fundamental and Subsidiary Rules, 1st Edition (Reprint), 1929.

Page 267—Appendix No. 6.—*Delete* the note under the item "Inspector of Lightning Conductor, Bengal, etc." subordinate to the head "Public Works."

Page 180—S. R. 305A.—*Number* the existing note as Note 1 and *insert* the following as Note 2 under the rule:—

NOTE 2.—When the means of conveyance maintained is only a bicycle, no allowance shall be granted under this rule to a Government servant during joining time.

Miscellaneous.

NOTIFICATION.

No. 4505Misc.—20th July 1931.—On the results of the examination held in August 1930 the following candidates have been recruited to fill up vacancies in the Lower Division Clerical Service of the Bengal Secretariat and certain attached offices, viz.—

Muhammadans.

		Roll No.
Muhammad Ibrahim Biswas	...	145
Abdul Latif	...	134
Muhammad Solaiman	...	129
Atsaruddin Ahmed	...	116
Syed Mozhar Hosnain	...	143
Majibar Rahman Choudhury	...	119
Muhammad Idris	...	136
Syed Habibur Rahman	...	159
Nawab Ali Sikdar	...	158
Abdur Rahman Mia	...	127
Serajul Hoque	...	162
Shamsul Huda	...	132
Shaikh Mehdi Billah	...	135
Tyebur Rahman	...	144

Non-muhammadans.

Santosh Kumar Chatterji	...	44
Gour Binode Laha	...	26
William V. Knight	...	18
Sachindra Kumar Ghosh	...	12
Phani Bhusan Manna	...	31
Suresh Chandra Ganguly	...	34
Deb Kumar Pal	...	33
Uday Chandra Haty	...	88
Khudiram Bhattacharji	...	16
Sukumar Dutt	...	28
Santosh Kumar Mukherji	...	37
Jibon Prosad Ghosh	...	71

E. N. BLANDY,
Secy. to the Govt. of Bengal.

COMMERCE DEPARTMENT.

Certificate of Approval.

No. 3449Com.—18th July 1931.—With reference to rule 7 of the rules issued by the Government of India with their Resolution No. 7552—7581-121, dated the 15th September 1913, for regulating the grant by Local Governments of licences to prospect for minerals and the grant of mining leases in British India, it is hereby certified that Mr. S. S. Guzdar of 226, Bowbazar Street, Calcutta, is approved by the Government of Bengal as a fit and proper person to whom such licences or leases can be granted in the Presidency of Bengal.

2. Under rule 8 of the aforesaid rules this certificate will expire at midnight on the 31st of December 1931

DECLARATION.

No. 3420Com.—16th July 1931.—Whereas certain land was acquired by Government, under the provisions of Act I of 1894 and Act XVIII of 1885, for a public purpose, viz., for such portion of the Darulah siding, East Indian Railway, as lies between chainage 12·55 and chainage 19·50 and as is edged with pink on plan L.A.M.A. No. 607, and whereas coal mines at Darulah colliery are situate under the said land, and whereas the New Kendah Coal Company, Limited, have given notice to Government, in accordance with the provisions of Act XVIII of 1885, that the said Company intend to work the seam known as the Samla seam, and whereas the mines have been inspected by the officer appointed by

Government for the purpose under section 5 (1) of Act XVIII of 1885, and whereas it appears to the Government that the working out of the coal of the mines underlying the said land is likely to cause damage to the surface of the said land and to the works constructed thereon, and whereas Government is willing to pay compensation to all parties having interest in the said mines underlying the said land, and whereas the said New Kendah Coal Company, Limited, have agreed not to work and get minerals underlying the land acquired for their siding, or underlying the land acquired for the branch or other lines with which the siding is connected or underlying the land of the branch or branches connecting the said siding with the main line, in such a manner as to injure or to endanger the safety of the undertaking or any part thereof, nor to claim any compensation for any restricted working:

Now, therefore, the Governor in Council is pleased to declare, under section 5, sub-section (2), clause (*b*) of the abovementioned Act XVIII of 1885, that the working shall be carried on by the said New Kendah Coal Company, Limited, in the manner and subject to the restrictions below specified, viz.:—

(1) No gallery shall be driven nor shall any coal be extracted under the area hatched with yellow on the plan.

(2) No gallery shall be driven nor shall any coal be extracted where the distance from the natural surface of the ground or the bottom of an artificial cutting to the top of the excavation, if made, is less than 50 feet.

(3) Where the distance from the natural surface of the ground or the bottom of an artificial cutting to the top of the excavation, if made, is 50 feet or more, galleries, not exceeding 12 feet in width by 12 feet in height, may be driven at distances apart not less than 60 feet, centre to centre, forming pillars, not less than 48 feet square, to be left unworked.

(4) Manholes, not exceeding 6 feet in height by 3 feet in width by 4 feet in depth, may be made where required by any rules made under the Indian Mines Act, 1923.

(5) Any inrush of water, quicksand or soft material shall be reported to the Chief Inspector of Mines without delay.

(6) Any collapse of workings or symptoms of collapse or crush which may endanger the stability of the acquired land shall be reported to the Chief Inspector of Mines without delay.

(7) These restrictions apply to the Samla seam only at Darulah colliery and to the area edged with pink on the plan, and the New Kendah Coal Company, Limited, shall give notice under section IV of the Land Acquisition (Mines) Act, 1885, of their intention to work any other seam under such area or to work coal under any other area of acquired land,

and that in all the above cases except to comply with the above conditions no further excavation shall be made in any of the galleries which already have been driven, the actual heights and widths of which have been carefully recorded on the plan marked L.A.M.A. No. 607 signed by the Chief Inspector of Mines.

The plan referred to may be seen in the office of the Chief Inspector of Mines in India by the parties concerned.

E. N. BLANDY,
Secy. to the Govt. of Bengal.

MARINE DEPARTMENT.

NOTIFICATION.

No. 30Mne.—18th July 1931.—In exercise of the powers conferred by sections 54 and 67 of the Inland Steam-vessels Act, 1917 (I of 1917), the Governor in Council is pleased to make the following rules regarding the provision of gangways and shelters for the use of passengers of inland steam-vessels:—

Rules.

I. (*a*) Gangways over which passengers embark and disembark to and from the river bank shall consist of not less than two widths of planking securely fastened together of a total width of not less than 2 feet and a portable hand rail provided for each gangway.

(*b*) Gangways over which passengers embark and disembark to or from pontoons or jetties shall be so constructed as to form one unit with a total width of not less than 2 feet and shall be fitted with a fixed hand rail on each side.

(*c*) Where practicable two gangways shall be provided one for embarking or disembarking passangers and the other for loading or discharging cargo. If it is not practicable to provide two gangways, on no account may passengers be embarked or disembarked and cargo loaded or discharged at the same time over the same gangway.

Penalty for breach of the rule is a fine which may extend to Rs. 50 for each offence, on the master of the vessel.

II. Every vessel fitted with electric light shall be provided with a cluster or flood light placed on each side of the vessel in such a position as to illuminate the passenger gangway at whatever place passengers are landed or embarked. Vessels not fitted with electric light shall be provided with efficient oil lamps to illuminate the passenger gangway.

Penalty for breach of the rule is a fine which may extend to Rs. 50 for each offence, on the master of the vessel.

III. At each landing place where not otherwise provided for and where the weekly average number of persons embarked or disembarked exceeds 500, a shelter with suitable lights shall be provided on the bank having a separate compartment for females and so constructed as to withstand and give shelter from sun, wind and rain.

Provided that in the case of services run exclusively during the day, the passengers' shelters need not be provided with lights.

Penalty for breach of the rule is a fine which may extend to Rs. 50 for the first offence and a separate penalty of Rs. 10 for each day for continuing the offence, on the owner or agent of the vessel until the shelter with suitable lights is provided.

E. N. BLANDY,
Secy. to the Govt. of Bengal.

PUBLIC WORKS DEPARTMENT.

Establishment.

NOTIFICATION.

Minister-in-charge: The Hon'ble Khan Bahadur Maulvi K. G. M. Faroqui.

No. 44.—18th July 1931.—Mr. W. B. Cairns, Executive Engineer and Inspector of Works, Council Chamber (Construction) Division, is allowed leave on average pay for three months and nineteen days, under paragraph 3 of the Model Leave Rules for contract officers, with effect from 1st July 1931.

Under orders of the Secretary of State in Council, as contained in the India Office letter No. S. & G. 3303/29, dated 24th July 1929, Mr. Cairns, late Quarries and Stoneyard Officer, New Delhi, is permitted, in continuation of the above leave, to avail himself of the balance of the unexpired portion of the leave previously granted to him by the Delhi Province, Public Works Department, viz., leave on average pay for three months and twenty-four days and leave on half average pay for one month and twenty-seven days.

L. R. FAWCUS,

Secy. to the Govt. of Bengal.

DEPARTMENT OF AGRICULTURE AND INDUSTRIES.

Veterinary.

NOTIFICATION.

Minister-in-charge: The Hon'ble Khan Bahadur Maulvi K. G. M. Faroqui.

Calcutta.— No. 3001Vetv.—16th July 1931—Rai Ajit Nath Das Bahadur, Calcutta, is appointed to be a member of the Committee of management of the Bengal Veterinary College constituted in this department notification No. 204T.A.I., dated the 23rd May 1930, *vice* the Hon'ble Mr Bijoy Prasad Singha Roy, resigned.

L. R FAWCUS,

Secy. to the Govt. of Bengal

Orders by the Registrar of Co-operative Societies, Bengal.

No. 176-L.—30th June 1931.—Whereas I am of opinion, as the result of an enquiry held into the constitution, working and financial condition of the Mirjapore Co-operative Bank (registered No. 523 of 1920), in the subdivision Kalna in the district of Burdwan, under sub-section (*1*) of section 35 of the Co-operative Societies Act, II of 1912, that the society ought to be dissolved.

Now, therefore, in exercise of the power conferred by sub-section (*1*) of section 39 of the same Act, I hereby cancel the registration of the said society.

And further, in exercise of the power conferred by sub-section (*1*) of section 42 of the same Act, I hereby appoint the Departmental Officer in charge of Kalna Circle to be liquidator of the said society.

No. 177-L.- 30th June 1931.- Whereas I am of opinion, as the result of an enquiry held into the constitution, working and financial condition of the Dumuria Joutha Bindan Samity (registered No. 70 (Midnapur) of 1926), in the subdivision Jhargram in the district of Midnapur, under sub-section (*1*) of section 35 of the Co-operative Societies Act, II of 1912, that the society ought to be dissolved.

Now, therefore, in exercise of the power conferred by sub-section (*1*) of section 39 of the same Act, I hereby cancel the registration of the said society.

And further, in exercise of the power conferred by sub-section (*1*) of section 42 of the same Act, I hereby appoint the Departmental Officer in charge of the Jhargram Circle to be liquidator of the said society.

No. 178-L.—30th June 1931.—Whereas I am of opinion, as the result of an enquiry held into the constitution, working and financial condition of the Ramanandagram Joutha Bank (registered No. 31-D of 1923), in the subdivision Munshiganj in the district of Dacca, under sub-section (*1*) of section 35 of the Co-operative Societies Act, II of 1912, that the society ought to be dissolved.

Now, therefore, in exercise of the power conferred by sub-section (*1*) of section 39 of the same Act, I hereby cancel the registration of the said society.

And further, in exercise of the power conferred by sub-section (*1*) of section 42 of the same Act, I hereby appoint the Departmental Officer in charge of the Munshiganj Circle to be liquidator of the said society.

No. 179-L.—30th June 1931.—Whereas I am of opinion, as the result of an enquiry held into the constitution, working and financial condition of the Sripur Gramya Mahajani Sabha (registered No. 74 of 1914), in the subdivision Gopalganj in the district of Faridpur, under sub-section (*1*) of section 35 of the Co-operative Societies Act, II of 1912, that the society ought to be dissolved.

Now, therefore, in exercise of the power conferred by sub-section (*1*) of section 39 of the same Act, I hereby cancel the registration of the said society.

And further, in exercise of the power conferred by sub-section (*1*) of section 42 of the same Act, I hereby appoint the Departmental Officer in charge of the Gopalganj Circle to be liquidator of the said society.

No. 180-L.—30th June 1931.—Whereas I am of opinion, as the result of an enquiry held into the constitution, working and financial condition of the Bahadurpur Krishi Sangha (registered No. 48-D of 1923), in the subdivision Sadar in the district of Mymensingh, under sub-section (*1*) of section 35 of the Co-operative Societies Act, II of 1912, that the society ought to be dissolved.

Now, therefore, in exercise of the power conferred by sub-section (*1*) of section 39 of the same Act, I hereby cancel the registration of the said society.

And further, in exercise of the power conferred by sub-section (*1*) of section 42 of the same Act, I hereby appoint the Inspector of Co-operative Societies, Mymensingh, to be liquidator of the said society.

No. 1-L.—3rd July 1931.—Whereas I am of opinion, as the result of an enquiry held into the constitution, working and financial condition of the Satpara Joutha Bank (registered No. 44 (Jessore) of 1925) in the subdivision Magura in the district of Jessore, under sub-section (*1*) of section 35 of the Co-operative Societies Act, II of 1912, that the society ought to be dissolved.

Now, therefore, in exercise of the power conferred by sub-section (*1*) of section 39 of the same Act, I hereby cancel the registration of the said society.

And further, in exercise of the power conferred by sub-section (*1*) of section 42 of the same Act, I hereby appoint the Departmental Officer in charge of the Magura Circle to be liquidator of the said society.

No. 2-L.—9th July 1931.—Whereas I am of opinion, as the result of an enquiry held into the constitution, working and financial condition of the Shahapur Mollapara Joutha Bank (registered No. 73 of 1925), in the subdivision Sadar in the district of Tippera, under sub-section (*1*) of section 35 of the Co-operative Societies Act, II of 1912, that the society ought to be dissolved.

Now, therefore, in exercise of the power conferred by sub-section (*1*) of section 39 of the same Act, I hereby cancel the registration of the said society.

And further, in exercise of the power conferred by sub-section (*1*) of section 42 of the same Act, I hereby appoint the Departmental Officer in charge of the Comilla Circle to be liquidator of the said society.

No. 3-L.—9th July 1931.—Whereas I am of opinion, as the result of an enquiry held into the constitution, working and financial condition of the Garaberia Co-operative Bank (registered No. 293 of 1923), in the subdivision Meherpur in the district of Nadia, under sub-section (*1*) of section 35 of the Co-operative Societies Act, II of 1912, that the Society ought to be dissolved.

Now, therefore, in exercise of the power conferred by sub-section (*1*) of section 39 of the same Act, I hereby cancel the registration of the said society.

And further, in exercise of the power conferred by sub-section (*1*) of section 42 of the same Act, I hereby appoint the Departmental Officer in charge of the Meherpur Circle to be liquidator of the said society.

S. K GANGULY,
Regr., Co-operative Societies, Bengal.

REVENUE DEPARTMENT.

Land Revenue.

NOTIFICATIONS.

Tippera.—No. 8768L.R.—17th July 1931.—Maulvi Asad Hossain, Sub-Deputy Collector and Khasmahal Officer, Comilla, is allowed leave on average pay, under rule 81 (*b*) (*ii*) of the Fundamental Rules from the 16th July 1931, or any subsequent date on which he may be relieved of his present duties, up to the 14th October 1931 (inclusive),

Rangpur.—No. 8876L.R.—20th July 1931.—Under the provisions of section 3 (*14*) of the Bengal Tenancy Act, 1885 (Act VIII of 1885), Maulvi Golam Mahboob Chaudhury, Settlement Kanungo, is authorised to discharge, in the district of Rangpur, the functions of a Revenue Officer, under Chapter X of that Act, so far as they relate to surveys and the preparation of record-of-rights.

Land Acquisition.

NOTIFICATIONS.

Calcutta.—No. 8852L.A. — 20th July 1931.—In exercise of the powers conferred by section 48 (*1*) of the Land Acquisition Act, I of 1894, the Governor in Council is pleased to withdraw from the acquisition of a piece of land comprising premises Nos. 9, 10, 10/1, 11 and 12, Maniktala Road, measuring, more or less, 11 cottahs 15 chitaks and 20 square feet of standard measurement, equivalent to 0·1977 of an acre, and bounded as follows, which was included in the area notified for acquisition under declaration No. 9964L.A., dated the 25th July 1929, published at page 1551, Part I of the *Calcutta Gazette* of the 1st August 1929, and required by the Calcutta Improvement Trust for the street scheme known as Scheme No. I (Maniktala) from Upper Circular Road to Baldiapara Road and Maniktala Bridge Approaches in Wards Nos. 3, 4 and 29 of the Calcutta Municipality in the city of Calcutta:—

Boundaries.

North—By Maniktala Road.
East—By Rajendra Lala Street.
South—By premises No. 2, Rajendra Lala Street and premises No. 1, Wards Institution Street.
West—By premises No. 8, Maniktala Road.

Rangpur.—No. 8855L.A. — 20th July 1931.—Whereas it appears to the Governor in Council that land is likely to be required to be taken by Government at the public expense for a public purposes, viz., for road diversion of Union Board Road at Goabari to be made by the Eastern Bengal Railway, in the village of Goabari, jurisdiction list No. 264, thana Pirgacha, pargana Manthana, district Rangpur, it is hereby notified that for the above purpose a piece of land measuring, more or less, 0·110 of an acre, bounded on the—

North and East—By the lands of Nesabuddin Sardar and others,

South—By the lands of Eastern Bengal Railway, and Union Board Road,

West—By the lands of Nesabuddin Sardar, Union Board Road and Eastern Bengal Railway,

is likely to be required within the aforesaid village of Goabari.

This notification is made, under the provisions of section 4 of Act I of 1894, to all whom it may concern.

A plan of the land may be inspected in the office of the Collector of Rangpur.

In exercise of the powers conferred by the aforesaid section, the Governor in Council is pleased to authorise the officers for the time being engaged in the undertaking, with their servants and workmen, to enter upon and survey the land and do all other acts required or permitted by that section.

Any person interested in the above land, who has any objection to the acquisition thereof, may, within thirty days after the date on which public notice of the substance of this notification is given in the locality, file an objection in writing before the Collector of Rangpur.

Rajshahi.—No. 8858L.A.—20th July 1931. —The Governor in Council is pleased to cancel the notification No. 11302L.A., dated the 15th September 1930, under section 4 of the Land Acquisition Act, I of 1894, published at page 1510, Part I of the *Calcutta Gazette* of the 18th idem, in respect of the proposed acquisition of 0·30 of an acre of land required by the Rajshahi Municipality for the construction of a small-pox shed in the village of Boalia, pargana Garerhat, district Rajshahi.

Rajshahi.—No. 8861L.A.—20th July 1931. —Whereas it appears to the Governor in Council that land is likely to be required to be taken by Government at the public expense for a public purpose, viz., for archæological excavations and for necessary diversion of Jamalganj-Paharpur Local Board Road in the interests of archæological excavations in the villages of Paharpur and Malancha, pargana Saguna, zilla Rajshahi, it is hereby notified that for the above purpose pieces of land comprising cadastral plots Nos. 379, 380 and 747 and a portion of cadastral plot No. 748 of mauza Malancha and cadastral plot No. 148 and portions of cadastral plots Nos. 103, 104, 105, 145, 146, 147, 149, 165, 170, 556 and 557 of mauza Paharpur and altogether measuring, more or less, 4·368 acres, are likely to be required within the aforesaid villages of Paharpur and Malancha.

This notification is made, under the provisions of section 4 of Act I of 1894, to all whom it may concern.

Plans of the land may be inspected in the office of the Subdivisional Officer, Naogaon.

In exercise of the powers conferred by the aforesaid section, the Governor in Council is pleased to authorise the officers for the time being engaged in the undertaking, with their servants and workmen, to enter upon and survey the land and do all other acts required or permitted by that section.

Any person interested in the above land, who has any objection to the acquisition thereof, may, within thirty days after the date on which public notice of the substance of this notification is given in the locality, file an objection in writing before the Collector of Rajshahi.

Burdwan.—No. 8864L.A.—20th July 1931. —Whereas it appears to the Governor in Council that land is likely to be required to be taken by Government at the public expense for a public purpose, viz., for constructing 3rd and 4th mile (up to chainage 16,000 feet) of Distributary No. 6/C main canal in connection with the Damodar Canal Project, in the villages of Chandutia, Ekdelpur and Sukur, jurisdiction list Nos. 66, 159 and 157, respectively, thana Burdwan, pargana Shahabad, district Burdwan, it is hereby notified that for the above purpose a piece of land measuring, more or less, 2·85 acres, commencing at chainage 10,560 ft. (2nd mile) in mauza Chandutia and running generally towards the east through mauzas Ekdelpur and Sukur, terminating at chainage 16,000 ft. in mauza Sukur, varying in width from 15ft. to 90 ft. and being 5,440 ft. in length, is likely to be required within the aforesaid villages of Chandutia, Ekdelpur and Sukur.

This notification is made, under the provisions of section 4 of Act I of 1894, to all whom it may concern.

A plan of the land may be inspected in the office of the Special Land Acquisition Deputy Collector, Burdwan, as well as in that of the Executive Engineer, Damodar Canal Division, Burdwan.

In exercise of the powers conferred by the aforesaid section, the Governor in Council is pleased to authorise the officers for the time being engaged in the undertaking, with their servants and workmen, to enter upon and survey the land and do all other acts required or permitted by that section.

In exercise of the powers conferred by section 17 (*4*) of the Land Acquisition Act, I of 1894, as amended by Act XXXVIII of 1923, the Governor in Council is pleased to direct that the provisions of section 5A of the Act shall not apply in this case.

Mymensingh.—No. 8867L.A. — 20th July 1931.—Whereas it appears to the Governor in Council that land is likely to be required to be taken by Government at the public expense for a public purpose, viz., for shifting ramp line of the Eastern Bengal Railway at Bahadurabad (Farithana), in the village of Dakatiapara, pargana Patiladaha district Mymensingh, it is hereby notified that for the above purpose a piece of land measuring, more or less, 0·642 of an acre, bounded on the—

North—By the portion of District Settlement plots Nos. 1137, 1124, 1126, 1119 and 1116 of mauza Dakatiapara,

East—By the portions of District Settlement plots Nos. 1197 and 1137 of mauza Dakatiapara,

South—By the Eastern Bengal Railway land,

West—By the portion of District Settlement plot No. 1116 of mauza Dakatiapara,

is likely to be required within the aforesaid village of Dakatiapara.

This notification is made, under the provisions of section 4 of Act I of 1894, to all whom it may concern.

A plan of the land may be inspected in the office of the Collector of Mymensingh.

In exercise of the powers conferred by the aforesaid section, the Governor in Council is pleased to authorise the officers for the time being engaged in the undertaking, with their servants and workmen, to enter upon and survey the land and do all other acts required or permitted by that section.

In exercise of the powers conferred by section 17 (*4*) of the Land Acquisition Act, I of 1894, as amended by Act XXXVIII of 1923, the Governor in Council is pleased to direct that the provisions of section 5A of the Act shall not apply in this case.

Chittagong.—No. 8870L.A. — 20th July 1931.— Whereas it appears to the Governor in Council that land is likely to be required to be taken by Government at the public expense for a public purpose, viz., for the construction of an inspection bungalow at Tankabati, in the village of East Kalauzan, thana Satkania, zilla Chittagong, it is hereby notified that for the above purpose a piece of land measuring, more or less, 1·60 acres covering the part of revisional survey plot No. 4053, is likely to be required within the aforesaid village of East Kalauzan.

This notification is made, under the provisions of section 4 of Act I of 1894, to all whom it may concern.

In exercise of the powers conferred by the aforesaid section, the Governor in Council is pleased to authorise the officers for the time being engaged in the undertaking, with their servants and workmen, to enter upon and survey the land and do all other acts required or permitted by that section.

Any person interested in the above land, who has any objection to the acquisition thereof, may, within 30 days after the date on which public notice of the substance of this notification is given in the locality, file an objection in writing before the Collector of Chittagong.

DECLARATION.

Burdwan.—No. 8749L.A.—17th July 1931. —Whereas it appears to the Governor in Council that land is required to be taken by Government at the public expense for a public purpose, viz., for the feed and outfall channels of the syphon at chainage 20,134 feet (new) of the distributary No 1, branch canal, Damodar Canal Project, in the village of Pilgram, jurisdiction list No. 141, in thana Galsi, pargana Bagha, district Burdwan, it is hereby declared that for the above purpose two pieces of land comprising full settlement plots Nos. 671, 470 and 471, parts of settlement plots Nos. 432, 430, 429, 431, 449, 427, 450, 451, 574, 573, 643, 571, 459, 570, 567, 566, 565, 460, 461, 462, 463, 464, 466, 467, 468, 469, 533, 524, 472, 104, 473, 522, 503 and 502, and altogether measuring, more or less, 4·68 acres are required within the aforesaid village of Pilgram.

This declaration is made, under the provisions of section 6, Act I of 1894, to all whom it may concern.

A plan of the land may be inspected in the office of the Special Land Acquisition Officer, Burdwan, as well as in that of the Executive Engineer, Damodar Canal Division, Burdwan.

Jurisdiction.

NOTIFICATION.

Chittagong - Chittagong Hill Tracts.—No. 8873Jur.—20th July 1931.—In exercise of the power conferred by the Bengal Districts Act (Bengal Act IV of 1864), and in supersession of all previous notifications relating to the boundary between the districts of Chittagong and Chittagong Hill Tracts, the Governor in Council is pleased to declare that the following shall be the boundary between the said two districts:—

From the trijunction of the districts of Chitagong, Hill Tippera and Chittagong Hill Tracts a line starting southwards and running along the boundary of the following villages, viz., Ramgar (J. L. No. 3), Jungle Dantmara (J. L. No. 4), Uttar Baramasia (J. L. No. 8), Lot 44 Neptune (J. L. No. 12), Pilkhana (J. L. No. 13), Jungle Kaiya Pukhia (J. L. No. 14), Purba Kaiya Pukhia (J. L. No. 97), Uttar Kanchannagar (J. L. No. 62), Manikpur (J. L. No. 63), Lot 17A Raktachhari (J. L. No. 64), Lot 18 Fenua (J. L. No. 71), Lot 19 Kutubchhari (J. L. No. 72) and Jungle Khiram (J. L. No. 73) in police-station Fatikchhari; Purba Khiram (J. L. No. 1), Brindabanpur (J. L. No. 3), Brikbhanupur (J. L. No. 4), Banaras (J. L. No. 5), Radhamadhabpur (J. L. No. 6), Melua (J. L. No. 31), Jungle Rauzan (J. L. No. 32) and Kadalpur (J. L. No. 53) in police-station Rauzan; Jungle Pomara (J. L. No. 44), Surat Singherdhala (J. L. No. 40), Jungle Surat Singherdhala (J. L. No. 39), Jungle Parua (J. L. No. 9), Sialbukka (J. L. No. 8), Thanda Chhari (J. L. No. 7), Megha Chhari (J. L. No. 4), Jungle Bagabili (J. L. No. 1), Bagabili (J. L. No. 2), Uttar Ghagra (J. L. No. 13), Madhya Ghagra (J. L. No. 12), Paschin Nischintapur (J. L. No. 14), Purba Nischintapur (J. L. No. 15), Lot 58 Nischintapur (J. L. No. 16), Gajalia (J. L. No. 17), Jungle Dakshin Nischintapur (J. L. No. 21), Chandraghona (J. L. No. 26), Kodala (J. L. No. 60), Lot 5 Jungle Kodala (J. L. No. 61), Lot 2 Kodala (J. L. No. 62), Padua (J. L. No. 65), Sukbilas (J. L. No. 67), Napit Pukuria (J. L. No. 71) and Dudh Pukuria (J. L. No. 72) in police-station Rangunia; Jungle Dhopachhari (J. L. No. 155) and Purba Dhopachhari (J. L. No. 156) in police-station Patiya; Silghata (J. L. No. 28), Baitarani (J. L. No. 29), Puranagar (J. L. No. 27), Baraduara (J. L. No. 32), Mahalia (J. L. No. 34), Sarasia (J. L. No. 35), Jungle Padua (J. L. No. 80), Dhalibila (J. L. No. 81), Andharmanik (J. L. No. 82), Charamba (J. L. No. 83), Maijbila (J. L. No. 105), Rajghata (J. L. No. 107), Paharchanda (J. L. No. 108), Gorasthan (J. L. No 109), Saraia (J. L. No. 113), Farenga (J. L. No. 112), Narischa (J. L. No. 111), Chanda (J. L. No. 96), Satgar (J. L. No. 95) and Chunati (J. L. No. 93) in police-station Satkania; Harbang (J. L. No. 18), Baraitali (J. L. No. 19), Nalbila (J. L. No. 25), Kakhara (J. L. No. 26), Faitang (J. L. No. 27), Manikpur (J. L. No. 30), Bamu (J. L. No. 28), Bilchhari (J. L. No. 29), Surajpur (J. L. No. 31), Ghunia (J. L. No. 32), Uchitarbil (J. L. No. 33), Ringbhang (J. L. No. 55), Bagachatar (J. L. No. 56), Paglirbil (J. L.

No. 57), Jungle Khuntakhali (J. L. No. 63) and Purnagram (J. L. No. 64) in police-station Chakaria; Idgar (J. L. No. 2), Garjania (J. L. No. 3), Kachhapia (J. L. No. 4), Dakshin Kachhapia (J L. No. 5), Manirjhil (J. L. No. 6), Sonaichhari (J. L. No. 24), Rajarkul (J. L. No. 25) and Jungle Dariardighi (J. L. No. 38) in police-station Ramu; Paglirbil (J. L. No. 6), Ratna Palong (J. L. No. 8), Uhala Palong (J. L. No. 10), Ukhia (J. L. No. 11), Reserve Ukhiarghat (J. L. No. 3) and Ukhiarghat (J. L. No. 12) in police-station Ukhia, as surveyed and defined in the Revisional Settlement of Chittagong district made in 1923-1931.

NOTE.—In this notification the villages named are included within the limits of the district of Chittagong.

Excluded Area.

NOTIFICATIONS.

Darjeeling. — No. 8756E.A. — 17th July 1931.—In exercise of the power conferred by clause (*1*) of section 5 of the Bengal Excise Act, 1909 (Bengal Act V of 1909), the Governor in Council is pleased to direct that the following amendment be made in paragraph 4 of notification No. 596S.R., dated the 30th March 1915, as subsequently amended, namely:—

For the entry showing limit of retail sale of undiluted pachwai against Darjeeling district, *substitute* the following:—

"Darjeeling district—12 seers."

Darjeeling. — No. 8757E.A. — 17th July 1931.—In exercise of the powers conferred by section 90 of the Bengal Excise Act, 1909 (Bengal Act V of 1909), the Governor in Council is pleased to direct that the following amendment be made in sub-clause (*ii*) of clause (*1*) of paragraph 37 of notification No. 596S.R., dated 30th March 1915, as subsequently amended, namely:—

For the words "excluding Darjeeling Municipality" *substitute* the words "excluding Darjeeling and Kurseong Municipalities and Kalimpong Bazar area."

H. C. V. PHILPOT,
Secy. to the Govt. of Bengal.

IRRIGATION DEPARTMENT.

Irrigation.

NOTIFICATION.

No. 16I.—17th July 1931.—The following draft of amendments, which, in exercise of the powers conferred by sections 6 and 11 of the Canals Act, 1864 (Bengal Act V of 1864), the Governor in Council intends to make, in the rules and schedule of rates of tolls for the Rampur Bil Khal joining the Gazipur Khal at Gazipur and Chechri on the north and Amua Done at Amua on the south in the district of Bakarganj (published in Bengal Government notification No. 13I., dated the 7th April 1931, at pages 450-51, Part I of the *Calcutta Gazette* of the 16th idem), is hereby published for the information of persons likely to be affected thereby.

2. The draft will be taken into consideration on or after the 10th September 1931, and any objections or suggestions received by the undersigned before that date will be considered:—

Draft amendments.

Schedule of rates of tolls.

Insert the words "and Chechri" after the words "at Amua" at the end of the last line of rule 12 of the said rules.

H. C. V. PHILPOT,
Secy. to the Govt. of Bengal.

LEGISLATIVE DEPARTMENT.

NOTIFICATION.

No 2160L.—20th July, 1931.—It is hereby notified, in pursuance of rule 14 (*9*) of the Bengal Electoral Rules, that Mr. J. M. Austin has been declared under rule 14 (*2*) of the aforesaid rules to have been duly elected by the Bengal Chamber of Commerce constituency to be a member of the Bengal Legislative Council.

J. BARTLEY,
Secy. to the Bengal Legis. Council.

SHERIFF'S OFFICE, THE 16TH JULY 1931.

Notice is hereby given that the Fourth Criminal Sessions of the year 1931 of the High Court of Judicature at Fort William in Bengal for the town of Calcutta and Factory of Fort William and the places subordinate thereto, will be held at the Court House, in the town of Calcutta, on Monday, the 3rd day of August next, at 11 o'clock in the forenoon, and thenceforward from day to day until the said sessions be over. And it is hereby proclaimed that all persons who are to prosecute any of the prisoners to be brought up for trial at the said sessions be present then and there to prosecute.

P. N. TAGORE, *Sheriff.*

সরিফ আফিস, সন ১৯৩১ সাল, তারিখ ১৬ই জুলাই।

সকলকে সমাচার দেওয়া যাইতেছে যে সুবে বাঙ্গালার ফোর্ট উইলিয়ম দুর্গের অধীন সহর কলিকাতায় ও অন্যান্য স্থানের ফৌজদারী বিচার নিষ্পত্তি জন্য আগামী সন ১৯৩১ সালের ৩রা আগষ্ট, সোমবার বেলা ১১ ঘটিকার সময় এবং যে পর্য্যন্ত সেশিয়ানের কার্য্য শেষ না হয় প্রতিদিন উক্ত সময়ে কলিকাতার হাইকোর্টের আপন আদালত ঘরে সন ১৯৩১ সালের চতুর্থ ক্রিমিনেল সেশিয়ান বসিবেক এবং এতদ্বারা প্রচার করা যাইতেছে যে, যে সকল ব্যক্তি কোন কয়েদির বিরুদ্ধে ফৌজদারী মিছিল করিবেক তাহারা উক্ত স্থানে উক্ত সময়ে হাজির থাকিয়া মোকদ্দমা করে, ইতি।

পি, এন, ঠাকুর,
সরিফ।

HIGH COURT NOTICE.

Original Side.

Calcutta, the 15th July 1931.

It is ordered that the following be passed and added to the Rules of the High Court, 1914 (3rd edition, 1930), with effect from 17th August 1931:—

I. That the following rules to be numbered 5A and 7A and be added to Chapter XXI:—

5A. In every order directing the appointment of the Official Receiver of immoveable property, there shall, unless otherwise ordered, be inserted a direction that the Official Receiver shall have all the powers provided for in O.XL, r.1 (*d*) of the Code, except that he shall not, without the leave of the Court, (1) grant leases for a term exceeding three years, or (2) bring suits except suits for rent or ejectment where the rents are in arrears for more than two months, or (3) institute an appeal in any Court (except from a decree in a rent suit or ejectment suit) where the value of appeal is over Rs. 1,000, or (4) expend on the repairs of any property, in any period of two years, more than half of the net annual rental of the property to be repaired, such rental being calculated at the amount at which the property to be repaired would let when in a fair state of repair.

7A. The order appointing Official Receiver shall be in Form 1A, or as the Court or Judge may direct.

II. That the following form to be numbered 1A and be added to Appendix F referred to in Chapter XXI:—

Appendix F.

Form No. 1A.

(Chapter XXI, rule 7A.)

It is ordered that the Official Receiver of this Court be and he is hereby appointed the receiver of the moveable property and of the rents, issues and profits of the immoveable property belonging to the estate of A.B., the intestate in the pleadings in this suit named, with power to get in and collect the outstanding debts and claims due to the estate of the said intestate and with all the powers provided for in O.XL, r.1 (*d*) of the Civil Procedure Code, except that he shall not, without the leave of the Court, (1) grant leases for a term exceeding three years or (2) bring suits except suits for rent or ejectment where the rents are in arrears for more than two months or (3) institute an appeal in any Court (except from a decree in a rent suit or ejectment suit) where the value of the appeal is over Rs. 1,000 or (4) expend on the repairs of any property, in any period of two years, more than half of the net annual rental of the property to be repaired, such rental being calculated at the amount at which the property to be repaired would let when in a fair state of repair. And it is further ordered that the defendants and all persons claiming under them do deliver up quiet possession of the said property, moveable and immoveable, of the said intestate together with all leases, agreements for lease, kabuliyats, accounts, books, papers, memoranda and writings relating thereto to the Official Receiver. And it is further ordered that the Official Receiver do take possession of the said property, moveable and immoveable, and collect the rents, issues and profits of the said immoveable property and that the tenants and occupiers do attorn and pay their rents in arrears and growing rents to the Official Receiver. And it is further ordered that the Official Receiver shall have power to bring and defend suits in his own name and shall also have power to use the names of the plaintiffs and defendants who are to be indemnified out of the estate and effect of the said intestate. And it is further ordered that the receipt or receipts of the Official Receiver shall be a sufficient discharge for all such sum or sums of money or property as shall be paid or delivered to him as such receiver as aforesaid. And it is further ordered (where an additional office establishment is required) that the Official Receiver shall be allowed to charge to the estate in addition to his own office establishment the following further establishment, namely,

By order of the Full Court,

MAURICE REMFRY, *Registrar.*

ORDERS BY THE COMMISSIONERS OF DIVISIONS.

Burdwan Division—Chinsura.

No. 1406L.S.-G.—16th July 1931.—The following draft amendments to the existing by-laws of the Howrah District Board confirmed by the Commissioner, Burdwan Division, in his notification, dated the 20th February 1912, and published at page 430, Part I of the *Calcutta Gazette*, dated 28th February 1912, as finally adopted by that Board at its meeting held on 20th December 1930, are published under rule 6 of the rules issued under Government notification No. 764T.M., dated 7th September 1910, for general information.

2. The proposed amendments will be taken into consideration on or after the 1st September 1931 for the purpose of confirmation, and any objection or suggestion which may be received by the undersigned before that date will be duly considered:—

Delete ";" after the word "Road" in clause 4 (*a*) of by-law No. 1 and *add* "or a road transferred to a union board under section 33 of the Village Self-Government Act, 1919".

No. 1023M.—15th July 1931.—It is hereby notified for general information that Saturday, the 29th August 1931, has been fixed for holding a by-election for the election of a Commissioner in Ward No. II of the Khirpai Municipality in the district of Midnapore, in place of Babu Rajendra Lal Adikary, deceased.

L. B. BURROWS, *Commissioner (offg.).*

Chittagong Division—Chittagong.

No. 2637G.—11th July 1931.—It is hereby notified for general information that, under section 9 of the Bengal Local Self-Government Act, III (B.C.) of 1885, Maulvi Abdul Rouf of village Jamsherpur has been duly elected as a member of the Brahmanbaria local board in place of Syed Fazlur Rahman, deceased.

No. 2708G.—18th July 1931.—Maulvi Samiruddin Shah, Sub-Deputy Collector, on leave, who has been posted to this division in Government notification No. 5448A., dated the 6th July 1931, is posted temporarily to Feni, in the district of Noakhali, to work as Circle Officer.

W. H. NELSON, *Commissioner.*

Dacca Division—Dacca.

No. 3661J.—14th July 1931.—It is hereby notified for general information that, under rule 20 (*b*) of the manual of rules for the management of charitable hospitals and dispensaries in Bengal, the following gentlemen are appointed to be members of the committee for the management of the charitable dispensary at Bajitpur in the district of Mymensingh:—

The Second Munsiff, Bajitpur (*ex-officio*).
Rai Sahib Surendra Nath Bose.
Babu Jogendra Nath Biswas.
Babu Golak Chandra Shaha.
Babu Rukshmini Raman Banik.
Babu Devendra Chandra Chowdhury.
Maulvi Syed A. H Muhammad Ali.
Maulvi Aftabuddin Ahmed.
Munshi Abdul Majid.
Maulvi Shamsuddin Ahmed.

No. 3703J.—16th July 1931.—In exercise of the power conferred on me by paragraph 2 of section 139 of the Bengal Local Self-Government Act (Bengal Act III of 1815), I propose to confirm the following amendments made by the district board of Dacca under paragraph 1 of the said section to their by-laws published by this office notification, dated the 4th May 1914, as subsequently amended.

2. The draft notification will be taken into consideration on the 1st September 1931. Any objection or suggestion received by the undersigned through the District Magistrate of Dacca before that date will be duly considered:—

Draft amendments to clauses (2) and (4) of by-law No. 1 of the Dacca District Board.

In clause (2) the words "or section 118A (*3*)" should be omitted and the following sub-clauses (*a*) and (*b*) should be added after the words "and includes any reservoir, or part of any river, khal or other channel, so set apart;":—

"(*a*) and any tank or well on which District Fund has been spent under section 79 of the Local Self-Government Act;

(*b*) or any other tank or well made over to the district board by private owners for the purpose of reservation of water for drinking and culinary purposes."

Clause (*4*). The words "or a Union Committee" occurring in clause (*d*) and in sub-clause (*e*) should be omitted and the following new sub-clause (*d*) should be added:—

"(*d*) Any such road transferred to a union board for management under section 33 of the Bengal Village Self-Government Act, 1919."

A. CASSELLS, *Commissioner (offg.).*

Dacca, the 20th July 1931.

No. 4764M.—It is hereby notified for general information that—

(*a*) Under sub-section (*2*) of section 6 of the Bengal Village Self-Government Act, 1919 (Bengal Act V of 1919), the following gentlemen have been duly elected to be members of the Barodi union board in police-station Baidyerbazar in the Narayanganj subdivision of the Dacca district:—

Babu Jitendra Nath Dhar.
Babu Rajendra Chandra Chanda.
Babu Hari Doyal Nandi.
Munshi Saizuddin Bhuia.
Munshi Kamaruddin Khalifa.
Babu Bishwambar Saha.

(*b*) Under sub-section (*3*) of section 6 of the Act, the following gentlemen have been appointed by me to be members of the said union board:—

Maulvi Abdus Sahad Mia.
Babu Devendra Chandra De Sarkar.
Munshi Asgar Ali.

R. M. CHAKRAVARTI, for *District Magistrate.*

Presidency Division—Calcutta.

No. 1332M.—16th July 1931.—It is hereby notified for general information that the next general elections of Commissioners of the Kanchrapara Municipality in the district of the 24-Parganas fixed for the 22nd August 1931 in this office notification No. 225M., dated the 7th February 1931, published at page 238, Part I of the *Calcutta Gazette* of the 19th February 1931, have been postponed to Saturday, the 20th February 1932.

No. 1899L.S.-G.—16th July 1931.—It is hereby notified for general information that, under section 13 of the Bengal Village Self-Government Act, 1919 (Bengal Act V of 1919), read with rule 35 of the rules for the election and appointment of members under the said Act, Babu Sitanath Biswas has been duly elected to be a member of Daibagyahati union board in Morrelganj police-station of the Bagerhat subdivision in the district of Khulna, *vice* Munshi Afezuddi Howladar, deceased.

No. 1339M.—18th July 1931.—It is hereby notified for general information that the following gentlemen have been duly elected to be Commissioners of the Kumarkhali Municipality in the district of Nadia at the last

general election of Commissioners held on the 29th June 1931:—

Ward No. I (Kumarkhali).

Babu Nanda Gopal Kundu.
Babu Mrityunjoy Kundu.

Ward No. II (Sherkandi).

Babu Mohendra Nath Roy.
Muhammad Eradali Meah.
Babu Pran Ballav Pramanick.

Ward No. III (Elongi).

Babu Gaurdas Kundu.
Babu Nishi Kanta Chakravartty.

Ward No. IV (Durgapur).

Babu Premdas Saha.

Ward No. V (Teberia).

Babu Sanjib Chandra Roy.
Babu Sarada Prasad Chaky.

No. 1342M.—18th July 1931.—It is hereby notified for general information that the following gentlemen have been duly elected to be Commissioners of the Baranagar Municipality in the district of the 24-Parganas at the last general election of Commissioners held on the 27th June 1931:—

Ward No. I.

Babu Nripendra Kumar Sen Gupta, B.L.
Babu Hira Lal Das.

Ward No. II.

Mr. J. R. Sword.
Babu Manick Lal Pramanic.
Babu Harinarayan Maitra, L.M.S.

Ward No. III.

Babu Ashutosh Pramanic.
Babu Panchu Gopal Chackerbutty.

Ward No. IV.

Babu Akshay Kumar Mukherji, B.L.
Captain N. N. Dutt.

F. W. ROBERTSON, *Commissioner (offg.)*.

24-Parganas, the 14th July 1931.

It is hereby notified for general information, under section 13 of the Bengal Village Self-Government Act, 1919 (Bengal Act V of 1919), read with rule 36 of the rules for the election and appointment of members, etc., of union boards under the said Act, that Babu Nripendra Nath Chakrabatty has been appointed by the District Magistrate, 24-Parganas, to be a member of the Kalikapur union board in police-station Protapnagar of the Sadar subdivision of the 24-Parganas district, in place of Babu Harinath Pal, deceased.

K. L. MUKHARJI, *Addl. Dist. Magistrate.*

Rajshahi Division—Jalpaiguri.

No. 2661J.—18th July 1931.—Under the provisions of rule 63 (2) of Chapter IV of the Bengal Jail Code, I appoint the following ladies to be non-official lady visitors of the Rangpur District Jail and Gaibandha Sub-Jail for a period of two years:—

Rangpur District Jail.

Mrs. S. G. Woollard

Gaibandha Sub-Jail.

Mrs. Violett Bartlett.

J. G. DRUMMOND, *Commissioner (offg.)*.

Rangpur, the 16th July 1931.

No. 4092J.—It is hereby notified for general information that, under section 13 of the Bengal Village Self-Government Act, 1919 (Bengal Act V of 1919), Babu Surendra Nath Chaudhury has been duly elected to be a member of Nageswari union board, police-station Nageswari, in Kurigram subdivision of the district of Rangpur, *vice* Munshi Golam Rahaman Sarcar, deceased.

T. M. DOW, *District Magistrate.*

The Calcutta Gazette

THURSDAY, JULY 23, 1931.

Part I A

Orders and Notifications by the Government of India republished for general information.

HOME DEPARTMENT.

NOTIFICATION.

PUBLIC.

Simla, the 9th July 1931.

No. F. 9/10/31.—In the Home Department Notification No. F. 215/23-Public, dated the 31st May 1923, regarding the use of uniforms by officers in civil employ, under the heading "Hot Weather Uniform" in the description of Civil Uniforms after the entry "Helmet, boots, etc., the coat" add the following entry:—

Gloves.—Gloves are not worn with the hot weather uniform.

S. N. ROY,
Joint Secy. to the Govt. of India (offg.).

FOREIGN AND POLITICAL DEPARTMENT.

NOTIFICATION.

Simla, the 8th July 1931.

No. 415-G.—The Governor-General in Council is pleased to recognise the appointment of Mr. J. Oyevaar, as Honorary Vice-Consul in charge of the Consulate-General for the Netherlands at Calcutta.

E. B. HOWELL,
Foreign Secy. to the Govt. of India.

FINANCE DEPARTMENT.

NOTIFICATIONS.

Simla, the 8th July 1931.

No. F. 67-III-Ex. I/31.—In exercise of the power conferred by rules 33, 37, 42 and 44 of the Civil Services (Classification, Control and Appeal) Rules, the Governor-General in Council is pleased to make the following rules to regulate the determination of domicile and the drawal of overseas pay.

1.—Domicile.

For the purposes of any rule made by the Governor-General in Council under rules 33, 37, 42 or 44 of the Civil Services (Classification, Control and Appeal) Rules the domicile of a Government servant shall, unless it be otherwise expressly provided in such rule, be determined in accordance with the following provisions, namely:—

1. A person can have only one domicile.
2. The domicile of origin of every person of legitimate birth is in the country in which at the time of his birth his father was domiciled, or, if he is a posthumous child, in the country in which his father was domiciled at the time of the father's death.
3. The domicile of origin of an illegitimate child is in the country in which at the time of his birth his mother was domiciled.
4. The domicile of origin prevails until a new domicile has been acquired, and a new domicile continues until the former domicile has been resumed or another has been acquired.
5. (1) A person acquires a new domicile by taking up his fixed habitation in a country which is not that of his domicile of origin.

(2) Any person may, if the law of any country so provides, and subject to any such provisions, acquire a domicile in that country by making, in accordance with the said provisions, a declaration of his desire to acquire such domicile.

Explanation 1.—A person is not to be considered as having taken up his fixed habitation in a country merely by reason of his residing there in His Majesty's civil or military service or in the exercise of any profession or calling.

Explanation 2.—A person does not acquire a new domicile in any country merely by reason of residing as part of the family or as a servant of any ambassador, consul, or other representative of the Government of another country.

6. The domicile of a minor follows the domicile of the parent from whom he derives his domicile of origin:

Provided that the domicile of a minor does not change with that of his parent if the minor is married or holds any office or employment in the service of His Majesty or has set up with the consent of the parent in any distinct business.

7. After marriage a woman acquires the domicile of her husband if she had not the same domicile before and her domicile during the marriage follows the domicile of her husband:

Provided that if the husband and wife are separated by the order of a competent court or if the husband is undergoing a sentence of transportation, the wife becomes capable of acquiring an independent domicile.

8. Save as otherwise provided above a person cannot during minority acquire a new domicile.

9. An insane person cannot acquire a new domicile in any other way than by his domicile following the domicile of another person.

10. Notwithstanding anything herein contained, a person who—

(*a*) was born, and has been educated exclusively, in Asia and had not at the date of his appointment resided out of Asia for a total period exceeding six months, or

(*b*) had before that date claimed and been deemed to be of Indian domicile for the purpose of his appointment to any office under the Government or of the conferment upon him by the Government of any scholarship, emoluments or other privilege,

shall be deemed to have had his domicile in Asia on that date, unless in the case of a person to whom clause (*a*) applies and clause (*b*) does not apply it is proved to the satisfaction of the appointing authority that he did not have his domicile in Asia on that date.

11. If any question arises as to the domicile of any officer at the time of his appointment, the decision thereon of the Governor-General in Council shall be final.

II.—Overseas Pay.

Where it is provided in a rule made by the Governor-General in Council under rules 33, 37, 42 or 44 of the Civil Services (Classification, Control and Appeal) Rules that the pay of a service or post shall include overseas pay, such overseas pay shall, unless it be otherwise expressly provided in such rule, be drawn only by a member of the service or an incumbent of the post whose domicile at the date of his first substantive appointment to the civil service of the Crown in India was elsewhere than in Asia.

No. F./12-XVII-R.II/31.—In exercise of the power conferred by rules 37 and 44 of the Civil Services (Classification, Control and Appeal) Rules, the Governor General in Council is pleased to make the following rule:—

RULE.

Indian Army reservists who, before they have earned a pension under Military rules for their military service, are appointed to the civil police of administrations under the Central Government, may, at the discretion of the head of the administration, and subject to the provisions contained in Article 356, Civil Service Regulations be allowed to count for civil pension all previous military service with the Colours and half of their reserve service.

H. DENNING,
Secy. to the Govt. of India.

LEAVE AND APPOINTMENTS.

The 3rd July 1931.

No. D.-4001-Ex. I.—* * *

Mr. J. C. Nixon, I.C.S., Officer on Special Duty in the Finance Department, is appointed temporary Joint Secretary with effect from the 4th July 1931.

W. R. TENNANT,
Deputy Secy. to the Govt. of India.

RESOLUTION.

The 9th July 1931.

No. D./4523-Ex. I/31.—Pending completion of the review of expenditure of the Government of India which is now proceeding, the Governor-General in Council has been pleased to decide, as an *ad interim* measure, that all appointments to any posts, permanent or temporary, made on or after the 16th July 1931, of persons not in Government service on the 15th July 1931, whose pay the Governor-General in Council is competent to determine under the Civil Services (Classification, Control and Appeal) Rules, 1930, shall be made on a provisional footing, that is to say, in an officiating capacity.

2. The above decision shall not apply to police establishment enrolled under the Police Act or to warders or head-warders (including female warders) in the Jail Department.

ORDERED that the Resolution be published in the *Gazette of India*.

H. DENNING,
Secy. to the Govt. of India.

DEPARTMENT OF INDUSTRIES AND LABOUR.

NOTIFICATION.

Simla, the 9th July 1931.

No. M.-1004.—The following draft of certain further amendments in the Indian Explosives Rules, 1914, which it is proposed to make in exercise of the powers conferred by section 5 of the Indian Explosives Act, 1884 (IV or 1884), is published as required by section 18 of the said Act for the information of all persons likely to be affected thereby, and notice is hereby given that the said draft will be taken into consideration on or after the 12th October 1931. Any objection or suggestion which may be received in respect of the said draft before the date specified will be considered by the Governor General in Council.

Draft amendments.

1. In rule 51 of the said Rules for sub-rule (*3*) the following sub-rule shall be substituted, namely:—

"(*3*) The following fees shall be charged for the amendment of a licence—

(*a*) In cases where the amendment relates to an increase in the quantity of explosives permitted by the original licence to be imported, manufactured, possessed or sold—

(*i*) If the original licence is in Form A, B, C or D.	A fee equal to the difference between the fee paid for the original licence and the fee which would have been payable had the original licence been granted for the increased quantity of explosives covered by the amended licence.
(*ii*) If the original licence is in Form E or E E.—	
When granted to cultivators.	*Nil.*
When granted to contractors or other persons.	Re. 1.
(*iii*) If the original licence is in any other Form.	Rs. 5.
(*b*) In all other cases ..	*Nil.*"

2. In rule 60 of the said Rules for sub-rule (*3*) the following sub-rule shall be substituted, namely:—

"(*3*) The fee chargeable on such new licence shall be five rupees or half the fee charged for the original licence, whichever is less:

Provided that no fee shall be charged on a new licence in Form 2 or in Form E or EE of Schedule III."

3. In rule 64 of the said Rules for the words "eight annas" the words "one rupee" shall be substituted.

4. In rule 68 of the said Rules after sub-rule (*2*) the following sub-rule shall be inserted, namely:—

"(*3*) The fee chargeable on such permit shall be five rupees."

5. After rule 71 of the said Rules the following rule shall be inserted, namely:—

"71A. A fee of one rupee shall be charged on a permit granted under rule 69, 70 or 71."

6. In Schedule II to the said Rules—

(*a*) In Article 1, for the letters and figures "Rs. 10" in column 6 the letters and figures "Rs. 20" shall be substituted.

(*b*) In Article 2, for the entry in column 6, the following shall be substituted, namely:—

"Rs. 20; but, where the explosives have been re-imported from any port for importation into which a licence has been granted under these rules, two rupees only."

(*c*) In Article 4, for the entry in column 6, the following shall be substituted, namely:—

—	"When the licence is for the explosives described in clause (*i*) in column 4.	When the licence is for the explosives described in clause (*ii*) or (*iii*) in column 4.
	Rs.	Rs.
Covering the maximum quantity of explosives allowed or any less quantity exceeding one-half such maximum.	40	30
Covering half such maximum or any less quantity exceeding one-fourth.	20	15
Covering one-fourth such maximum or any less quantity.	8	6

Where the applicant holds and produces a licence in Form XI of Schedule VIII of the Indian Arms Rules, 1924,—free of charge."

(*d*) In Article 5, for the entry in column 6, the following shall be substituted, namely:—

—	"When the licence is for the explosives described in clause (*i*) in column 4.	When the licence is for the explosives described in clause (*ii*) or (*iii*) in column 4.
	Rs.	Rs.
Covering the maximum quantity of explosives allowed or any less quantity exceeding one-half such maximum.	20	15
Covering half such maximum or any less quantity exceeding one-fourth.	10	7-8
Covering one-fourth such maximum or any less quantity.	4	3

Where the applicant holds and produces a licence in Form XI or Form XII of Schedule VIII of the Indian Arms Rules, 1924,—free of charge."

(*e*) In Article 6, for the entry in column 6, the following shall be substituted, namely:—

—	"When the licence is for the explosives described in clause (*i*) in column 4.	When the licence is for the explosives described in clause (*ii*) or (*iii*) in column 4.
	Rs.	Rs.
Covering the maximum quantity of explosives allowed or any less quantity exceeding one-half such maximum.	10	7/8
Covering half such maximum or any less quantity exceeding one-fourth.	5	3/8
Covering one-fourth such maximum or any less quantity.	2	1/8

Where the applicant holds and produces a licence in Form XI, Form XII or Form XIV of Schedule VIII of the Indian Arms Rules, 1924,—free of charge."

(*f*) In Article 7, for the entry in column 6, the following shall be substituted, namely:—

"Half the fees chargeable on the same explosive in the same quantity in Articles 4, 5 and 6, respectively."

(*g*) In Article 8, for the entry in column 6, the following shall be substituted, namely:—

"Free of charge to cultivators but Rs. 5 from contractors and other persons."

(*h*) In Article 9, for the entry in column 6, the following shall be substituted, namely:—

"Free of charge to cultivators but Rs. 2-8-0 from contractors and other persons."

(*i*) In Articles 12 to 17, for the entries in column 6, the following shall be substituted, respectively, namely:—

"Rs. 10
Rs. 45
Rs. 60
Rs. 40
Rs. 10
Rs. 15."

(*j*) In Article 17, for the entry in column 4, the following shall be substituted, namely:—

"Any explosive covered by the licence granted under Article 13 or 14, in any quantity."

J. A. SHILLIDY,
Secy. to the Govt. of India.

ARMY DEPARTMENT.

Simla, the 11th July 1931.

Part B.

No. 430.—The following appointments are made:—

* * * *

AUXILIARY FORCE, INDIA.

* * * *

The undermentioned officers designate of the Army in India Reserve of Officers are granted tempy. commissions for the periods noted against their names:—

Calcutta Light Horse.

To be Lt.

Newlyn Bywater. From 1st to 16th May 1931.

* * * *

No. 438.—The following transfer is made:—

AUXILIARY FORCE, INDIA.

Capt. A. M. Ballingall, M.C., V.D., from the Cal. Sco. to the Genl. List. Dated 7th Apl. 1931.

CANTONMENTS—REGULATIONS.

No. 439.—The following draft of certain further amendments to the Cantonment Fund Servants Rules, 1925, which it is proposed to make in exercise of the powers conferred by section 280 of the Cantonments Act, 1924 (II of 1924), is published as required by sub-section (1) of the said section for the information of all persons likely to be affected thereby, and notice is hereby given that the said draft will be taken into consideration on or after the 11th August 1931.

Any objection or suggestion which may be received from any person with respect to the draft before the said date will be considered by the Governor-General in Council.

Draft amendments.

1. In rule 19 of the said Rules—

(1) in sub-rule (2)—

(*a*) to clause (*d*) the word "or" shall be added; and

(*b*) after clause (*d*) the following clause shall be inserted, namely:—

"(*e*) a fidelity insurance policy approved by the Cantonment Authority and issued by an insurance company approved by the Governor-General in Council"; and

(2) after sub-rule (3) the following sub-rule shall be inserted, namely:—

"(4) The premia for the policy referred to in clause (*e*) of sub-rule (2) shall be paid by the Cantonment Authority and the amount thereof shall be deducted from the salary of the servant."

2. After Form D of the Forms included in Schedule I to the said Rules, the following Form shall be inserted, namely:—

"E

Form of Security Bond where a fidelity insurance policy is taken as security.

KNOW ALL MEN by these presents that I .....of.....am held and firmly bound unto the Cantonment Authority of.....in the sum of Rs.....to be paid to the said Cantonment Authority for which payment I bind myself my heirs executors administrators and legal representatives by these presents.

WHEREAS the above bounden..... was on the.....day of..... 19.....appointed to and now holds the office of.....in the Cantonment of..... in the..... District AND WHEREAS the said..... by virtue of such office is bound to keep true and faithful accounts of his dealings with all property and money which may come to his hands or possession or under his control. Such accounts to be kept in the form and manner that may from time to time be prescribed by duly constituted authority and also to prepare and submit such returns and accounts and other documents as may from time to time be required of him. AND WHEREAS to secure the due and faithful performance by the said .....of the duties of his office and of any other office which he may hold under the aforesaid Cantonment Authority, and to indemnify themselves against any loss injury or damage which the said Cantonment Authority may in any way suffer or sustain by reason of his misconduct neglect or oversight or otherwise through him or any person acting under or for him the aforesaid Cantonment Authority have entered into a Fidelity Insurance Policy for a sum of Rs..... with the.....Company of..... for a period of.....and the said..... has authorised the said Cantonment Authority to realise by monthly deductions from the salary that he may be drawing from time to time such sums as may be necessary to defray the cost of the premia to be paid on account of the aforesaid policy or on account of any other Policy of Insurance which the said Cantonment Authority may hereafter take out for the purpose of indemnifying themselves as aforesaid during the period of service with them of the said..... ..

Now the condition of the above written bond is such that if the said..... has whilst he has held the said office of..... .....as aforesaid always duly performed and fulfilled the duties of his said office and if he shall whilst he shall hold the said office or any other office to which he may be appointed or in which he may act always duly perform and fulfil all and every the duties thereof respectively and other the duties which may from time to time be required of him and shall also at all times indemnity and save harmless the said Cantonment Authority and Fund from all and every loss injury and damage which has been or shall or may at any times or time hereafter during the service or employment of the said..... in such office as aforesaid or in any such other offices aforesaid be sustained incurred or suffered by the said Cantonment Authority or Fund by reason of any act neglect failure misconduct default disobedience omission or insolvency of the said.....or of any person or persons acting under him or for whom he may be responsible or if the said Cantonment Authority have realised from the aforesaid Insurance Company or any other Insurance Company the amount of the Policy which the said Cantonment Authority may have taken out with such Insurance Company to indemnify themselves as aforesaid then this obligation shall be void and of no effect otherwise the same shall be and remain in full force. And it is hereby agreed that on the final termination of the service of the said..... this bond shall remain with the said Cantonment Authority for..... .....calendar months as security against any loss or injury or damage that may have been sustained or incurred by the said Cantonment Authority or Fund owing to the act neglect or default of the said.....or any such other person or persons as aforesaid and which may not have been discovered until after the termination of his said service and which is not covered by any Policy of Insurance as aforesaid and that his liability hereunder shall continue until the expiry of the said term of..... calendar months.

IN WITNESS whereof the said..... has hereunto set his hand and seal this..... day of.....19.....

Signed sealed and delivered by the abovenamed in the presence of—

G. M. YOUNG,

Secy. to the Govt. of India

The Calcutta Gazette

THURSDAY, JULY 23, 1931.

Part IB

Educational Notices.

Presidency Division.

NOTIFICATION.

40/1A, Free School Street, Calcutta, the 29th June 1931.

Test Examination of private candidates for the Matriculation Examination of 1932.

A Test Examination of private candidates will be held in the Senate Hall, Calcutta, from Monday, the 30th November 1931. *Such candidates only as reside in any of the districts of the Presidency Division, including Calcutta, will be admitted to the examination.* The term "private candidates" includes schoolmasters. A non-Bengali candidate should produce an affidavit sworn by his legal guardian before a Magistrate that the candidate has been in residence in any of the districts of the Presidency Division including Calcutta for at least one year before the date of the examination.

2. (*a*) Private candidates are those who have not attended any school, recognised or unrecognised, imparting general education for at least one year previous to the Matriculation Examination. They should produce proof that they have not attended any school for such period.

(*b*) They should also produce certificates of conduct and progress in studies from the authorities of the last school where they read, and also a certificate from other reliable authorities regarding conduct and progress in studies after leaving school.

(*c*) The transfer certificates granted to them by the authorities of the schools in which they studied last and the Registrar's receipt for the fee paid in the case of those candidates who previously appeared at the Entrance or the Matriculation Examination must be submitted in original along with the application for permission to appear at the Test Examination.

(*d*) A statement of the antecedents of the candidate should accompany his application. He should state whether he has read in any unrecognised school, and, if so, in what school and what year. A student, who failed to pass the annual examination for promotion to the first class at the end of the year 1930 and then left school, will in no circumstances be allowed to appear at the Test Examination of 1931.

3. *Bona fide* teachers employed in any of the schools in the Presidency Division may be admitted to the examination. They must produce certificates of service and character from their employers or from the District Inspector of Schools of the district concerned.

4. No one shall be admitted to the Matriculation Examination unless he has completed the age of fifteen years on the first day of the month in which the Matriculation Examination is held.

5. Each candidate should submit to the Inspector of Schools, Presidency Division, and *not to the undersigned personally*, not later than the 5th October 1931 (under no circumstances an application for permission to sit for the said examination will be entertained after the 3rd November 1931) his application for admission to the Test Examination, with the following particulars:—

(1) Age, (2) home district and residence, (3) father's name, (4) whether he appeared at any previous Entrance or Matriculation Examination, (5) classical language, (6) vernacular language, and (7) which two of the following optional subjects he has taken up:—

(*a*) Additional Mathematics.

(*b*) Additional paper in a classical language.

(*c*) History.

(*d*) Geography.

(*e*) Elementary Mechanics.

Candidates may only offer one of the following vernacular and classical subjects (compulsory or additional):—

Vernaculars—(*i*) Bengali, (*ii*) Hindi, (*iii*) Urdu, (*iv*) Alternative English for those whose vernacular is neither Bengali nor Hindi nor Urdu.

Classics (*i*) Sanskrit, (*ii*) Pali, (*iii*) Persian, (*iv*) Arabic.

6. The admission fee for the examination is Rs. 6 for each candidate. This must be remitted with the application on or before the prescribed date (5th October 1931), after which a fine of Rs. 2 will be imposed for each week's delay. This fee together with fine, if any, should be deposited into a Government Treasury or Sub-Treasury in Bengal and the chalan showing the deposit should be attached to the application which must reach this office on or before the prescribed date. *In no circumstances will the admission fee be refunded.* All examinees must obtain receipts for fees from the Inspector's office, which should be shown to the Superintendent of the Examination Hall on the first day of the examination.

7. No private student will be admitted to the Test Examination unless he is identified to the satisfaction of the Superintendent at the Examination Hall during the examination by a Government servant who is not in the inferior service or by a teacher in any recognised college or high school.

8. Candidates who are sent up by this office must appear at the Calcutta Examination centre.

9. Those who reside at a distance from Calcutta may, as special cases, be permitted to sit at the Test Examination at the nearest Government High English School. They will be supplied with printed question papers from this office to which their answer papers should be sent by the head master concerned.

10. The date of the Matriculation Examination in 1932 will be notified hereafter.

11. Applications and fees for admission to the examination must reach the office of the Registrar on or before the date to be fixed by the University.

12. Programme of Test Examination—

Monday, 30th November—

Morning—English Translation—10-30 a.m. to 1 p.m.

Afternoon—English Test and Grammar—1-30 p.m. to 4 p.m.

Tuesday, 1st December—

Morning—Compulsory Mathematics—10-30 a.m. to 1 p.m.

Afternoon—Vernacular language—1-30 p.m. to 4 p.m.

Wednesday, 2nd December—

Morning—Compulsory Classical language—10-30 a.m. to 1 p.m.

Afternoon—Additional Classical language—1-30 p.m. to 4 p.m.

Thursday, 3rd December—

Morning—History—10-30 a.m. to 1 p.m.

Afternoon—Additional Mathematics—1-30 p.m. to 4 p.m.

Friday, 4th December—

Morning—Geography—10-30 a.m. to 1 p.m.

Afternoon—Mechanics and Hygiene—1-30 p.m. to 4 p.m.

Intermediate and B.A. Examinations in 1932.

Subdivisional Inspectors, Sub-Inspectors and *bona fide* teachers of English schools in the Presidency Division, who have been employed as such for at least three years preceding the examination, will be admitted to the above examinations on production of certificates of character and length of service (with dates) from their employers. Laboratory assistants and demonstrators and librarians of affiliated colleges will be treated as teachers. *Their applications must reach this office on or before the 1st December 1931.*

1. In accordance with section 9, Chapter XV of the revised regulations dealing with the registration of University students, all candidates who intend to appear at any of the ensuing examinations of the University of Calcutta otherwise than as students of affiliated institutions, and who have applied for or have obtained the special permission of the Senate for the purpose, are required to apply to the Registrar of the Calcutta University for the registration of their names as University students. No person will be deemed a "University student" unless and until his name has been duly registered, and none but "University students" will be eligible for admission to any University examination other than the Matriculation. A registration fee of Rs. 2 must accompany every application.

2. Candidates for the B.A. Examination must send to the Inspector of Schools, Presidency Division, and *not to the undersigned personally*, their F.A., I.A., or I.Sc. certificates and candidates for the Intermediate Examination their Entrance and Matriculation certificates, together with a letter in original from the Senate of the Calcutta University, permitting them to appear at the examination.

3. Candidates should carefully read the printed form of application and supply all the information required by the University, including the Registrar's receipt in the case of those school-masters who were admitted to a previous examination of the same class.

4. The date of the Intermediate and B.A. Examinations in 1932 will be notified hereafter.

5. Applications with the countersignature of the undersigned and fees for admission to the above examinations must reach the *office of the Registrar on or before the dates to be fixed by the University*, and must be sent to that office by the candidates direct.

K. N. MITTER,
Inspector of Schools.

Burdwan Division.

Chinsura, the 7th July 1931.

Rules for the admission of Private Candidates to the Calcutta University Matriculation Examination, 1932.

1. Private students are those who have not attended any recognized or unrecognized High English School for at least one year previous to the Matriculation Examination. The term "private students" includes teachers of schools.

2. Private candidates must appear at the Test Examination to be held on Monday, the 14th December 1931, and the following days at any of the Government High Schools in the Burdwan Division.

3. Applications for admission to the Test Examination must be submitted through the head master of the school in which the applicant last read. The head master, in fowarding the application to this office, should note whether he recommends the application or not. If he does not, his reasons should be stated. The information to be given in, and the documents to be appended (in original) to, the application are the following:—

(*a*) Name of the school in which the candidate last studied.

(*b*) Transfer certificate (in original) granted to the candidate by the head master of the school in which he last read; or

In the case of a candidate who previously appeared at the Entrance or Matriculation Examination, the Registrar's receipt (in original) for the fee paid.

(*c*) Age of the candidate. No candidate is eligible who has not completed the age of fifteen years on the first day of the Matriculation Examination.

(*d*) In the case of school masters, a certificate of good conduct from the Secretary of the school in which the candidate is serving.

(*e*) A certificate from a respectable gentleman other than a relative to the effect that the candidate has prosecuted a regular course of study and has been subject to proper discipline, and that he has not read in any school since the last Matriculation Examination held in March 1931. Detailed information is needed under this head. The person granting the certificate should state his social or professional position.

(*f*) Names of subjects in which the candidate wishes to be examined.

(*g*) Postal address.

4. Each private candidate will have to pay a fee of Rs. 6, which should be remitted to the Inspector of Schools, Burdwan Division, Chinsura, along with his application for admission to the Test Examination by the 20th November 1931, after which date a fine of Rs. 2 will have to be paid for each week's delay. *Under no circumstance will the admission fee be refunded.* No private candidate will be admitted to the Test Examination, unless he is accompanied, for the purpose of identification, by some person known to the office of the Inspector of Schools, Burdwan Division, or to the staff of the Zilla School where he will appear. Those who are not *bonâ fide* residents of the Burdwan Division will not be admitted to the Test Examination.

5. **The fee for the Matriculation Examination should NOT be sent to this office.** It should be sent to the Registrar by the candidate himself, together with his countersigned application.

6. The Matriculation Examination for 1932 will be held on the 9th March 1932 and the following days or any other subsequent dates declared by the University.

INTERMEDIATE AND B.A. EXAMINATIONS.

1. Deputy Inspectors of Schools, Sub-Inspectors of Schools and *bonâ fide* teachers of English schools, who have served as such for the full period of three academical years preceding the examinations, will be admitted to the abovementioned examinations.

2. Candidates for the Intermediate and B.A. Examinations must produce certificates of character and length of service from the Secretaries of their respective schools. Candidates for the B.A. Examination must forward with their applications their F.A. or I.A. certificates, and those for the Intermediate Examination their Entrance or Matriculation certificates. Candidates admitted to a former examination must produce the Registrar's receipt in addition.

3. Under section 19 of the Indian Universities Act, candidates for the Intermediate and B.A. Examinations are informed that their applications for admission to these examinations will not be considered, unless they enclose with their applications to this office the sanction of the Senate to appear at the said examinations. Candidates, who have applied for or have obtained the special permission of the Senate for the purpose, are required, under section 9, Chapter XV of the Revised Regulations dealing with the registration of University students, to apply at once to the Registrar for the registration of their names as University students. No person will be deemed a "University student" unless and until his name has been duly registered, and none but "University students" will be eligible for admission to any University examination other than the Matriculation.

4. The printed form of application should be carefully and correctly filled in and submitted to this office on or before the 20th December 1931 at the latest, together with other papers as mentioned in rules 2 and 3, after which no application will be received.

5. The dates of Intermediate and B.A. Examinations of 1932 may be obtained from the Registrar, Calcutta University.

K. C. RAY,
Inspector of Schools.

NOTIFICATION.

Examination in the Art of Teaching, Burdwan Division.

Chinsura, the 29th June 1931.

An examination in the Art and Practice of Teaching for teachers of English subjects in Boys' Secondary Schools (aided and unaided) will be held at the Hooghly Training School, on Monday, the 7th September 1931, at 11 a.m., and on the following date, if necessary. The examination of teachers of vernacular subjects and oriental classical languages of the same schools will also be held on the same date and at the same place and hour.

2. The following teachers are eligible for the examinations:—

(*a*) Teachers of English subjects, who have passed (*i*) the Matriculation or some higher University Examination, or (*ii*) the Middle English Scholarship Examination or the terminal examination at the end of the middle stage of instruction. The examination of these teachers will be conducted in English.

(*b*) Teachers of vernacular subjects, who have passed the same examinations, or the Middle Vernacular Scholarship Examination, or the terminal examination at the end of the middle stage of instruction. The examination of these teachers will be conducted in vernacular.

(*c*) Pandits and Maulvis employed in teaching an oriental classical language other than Pandits in Sanskrit *tols* and Maulvis in Madrasahs. They must have passed the Sanskrit Title Examination or the Final Examination of a Senior Grade Madrasah. The examination in the case of these classes of teachers will be conducted either in English or vernacular at the option of the candidate.

3. The examination will consist of—

(*a*) A practical examination in class control, the candidate being required to keep a class of at least a dozen boys attentive and fully occupied throughout a lesson.

(*b*) A practical test of teaching ability, the candidate being required to give two lessons on any two of the subjects—English, Bengali, Sanskrit, Arabic, Persian, Urdu, History, Geography, Arithmetic, Algebra, Geometry, etc.

(*c*) An oral examination, in which the Inspector of Schools or other examiner will ask questions on the Art of Teaching, object lessons, class management, organisation and discipline.

4. The following books are recommended for study by the candidate:—

(*a*) For teachers of English subjects—

(1) Indian Teachers' Guide, by P. Wren, (2) Indian School Organisation, by P. Wren, (3) Suggestions for the consideration of Teachers (Board of Education, Whitehall), (4) Talks to Teachers (James), (5) Art of Teaching by D. Salmon, (6) Direct Method by Tate and Rajagopalchari.

(*b*) For teachers of vernacular subjects—

(1) বিবিধ বিধান by A. N. Adhikari, (2) Teachers' Manual by Khan Bahadur Bhasanullah, (3) পাঠটীকা লিখিবার পদ্ধতি by Jagannath Dey, (4) মনোবিজ্ঞান by S. C. Brahmachary, (5) ভূগোল শিক্ষা প্রণালী by I. Haque.

(*c*) Teachers of oriental classical languages may study any of the above sets of books.

5. Intending candidates from High Schools should submit their applications through the Headmasters and teachers of Middle Schools and Junior Madrasahs through the District Inspectors, so as to reach this office *not later than the 23rd August 1931.* Every candidate will produce at the time of the examination the certificate of his having passed the University or other examination, which admits him to the present examination. The following information should accompany the application:—

(1) Name (in full).

(2) Name of father (in full).

(3) Names of native village and district.

(4) Last examination passed.

(5) Year of passing.

(6) Period of service as a teacher.

(7) Present appointment with date (mention whether he is a teacher of English subjects or vernacular subjects or of oriental languages).

(8) Two class subjects in which he wishes to be examined.

(9) Signature of applicant with full address.

6. Every candidate must bring with him at the time of examination two lesson notes on the subjects in which he wishes to give lessons. These notes should be made over to the examiner at the time of the practical examination.

7. Candidates should state whether they sat for the examination previously; if so, how often, giving dates.

K. C. RAY,

Inspector of Schools, Burdwan Division.

State Medical Faculty of Bengal.

ADDENDUM.

The 17th July 1931.

No. 1350F.—In addition to the list of candidates declared to have passed the Final Licentiateship Examination of the Faculty held in April 1931, published in the *Calcutta Gazette*, dated the 18th June 1931, the undermentioned candidate is declared to have passed the Final Licentiateship Examination:—

National Medical Institute
Durga Dass Dougall

R M DAS, Secretary.

Calcutta University.

NOTICE.

Senate House, the 16th July 1931.

The next D. P. H. Examination in Parts I and II will commence on the following dates:—

D. P. H. Examination, Part I, will commence on Monday, the 17th August 1931.

D. P. H. Examination, Part II, will commence on Monday, the 14th September 1931.

Fees and applications for admissions to both the parts of the examination must reach the office of the Controller of Examinations on or before Monday, the 27th July 1931.

The M. L. Examination of 1931 will commence on Tuesday, the 8th December 1931.

Fees and applications for admission to the M. L. Examination must reach the office of the Controller of Examinations on or before Tuesday, the 8th September 1931.

N. SEN,
Controller of Examinations.

Orders by the Vice-Chancellor and Syndicate of the Calcutta University.

Senate House, the 9th July 1931.

NOTIFICATION No. T. 283.

The following pieces from the Intermediate Bengali Selections (published by the University) are prescribed to be read for Bengali Vernacular for the Intermediate Examinations in 1933:—

Prose.

Bhudeb Mukhopadhyay. Jatiyabhaba—Upakramanika.
Rajnarayan Basu. Sekal ar ekal.
Bankimchandra Chattopadhyay. Manushyatwa ki. Kapalkundala—Stup Shikhare and Samudra Tate.
Rajanikanta Gupta. Bangalir Biratwa.
Akshaychandra Sarkar. Hemchandra O Madhusudan.
Jogindranath Basu. Madhusudaner Kavyanurakti.
Akshaykumar Maitreya. Sekaler Sukh Duhkha.
Swami Vivekananda. Gangasagar Sangame.
Asutosh Mukhopadhyay. Banga Sahityer Bhabishyat.
Ramendrasundar Trivedi. Iswarchandra Vidyasagar.
Saratchandra Chattopadhyay. Shrikanter nishitha abhiyan.
Rabindranath Thakur. Swadeshi Samaj.
Khagendranath Mitra. Mahatma Gurudas Bandyopadhyay.
Jagadindranath Ray. Tajmahal.
Arabinda Ghosh. Kshamar Adarsha.

Poetry.

Brindaban Das. Gaurchandrika.
Michael Madhusudan Datta. Bangabhasha
Kasiram Das. Pramilar Chitarohan. Lakshman O Indrajit.
Bijaychandra Majumdar. Lakshya Pathe.
Hemchandra Bandyopadhyay. Britra Samhar (Sixth Canto).
Rabindranath Thakur. Bharat Lakshmi. Vairagya. Tajmahal.
Dwijendralal Ray. Bangabhasha.
Govindachandra Ray. Yamuna Lahari.
Najrul Islam. Daridrya
Jatindramohan Bagchi Andhabadhu.
Chittaranjan Das. Antaryami.
Akshaykumar Baral. Manab Bandana.

The following books are recommended as showing the standard up to which students will be expected to have read:—

Ramendrasundar Trivedi. Charitrakatha.
Vivekananda. Prachya O Paschatya.
Sisirkumar Ghosh. Narottamcharita.
Mankumari Basu. Birkumarbadha Kavya.
Mir Musraff Hossain. Bishad Sindhu.
Karunanidhan Banerjee. Sata nari.

NOTIFICATION No. T. 284.

The book entitled "Chiner Dhup" by Satyendranath Datta is omitted from the list of books prescribed in Bengali as Second Language for female candidates for the I.A. Examination in 1932 and the following pieces from *Kavya Sanchayan* (collection of poems by Satyendranath Datta, published by Messrs. M. C. Sarkar & Sons, Calcutta) are substituted for "Chiner Dhup" in the list of books prescribed to be read in Bengali as Second Language for female candidates for the I.A. Examination in 1933:—

Sagartarpan.
Amra.
Ganga-hrdi-Bangabhumi.
Samudrashtak.
Sindhu tandab.
Jatir panti.
Pranam.

NOTIFICATION No. Misc. R. 55.

Senate House, the 13th July 1931.

The following changes in Chapter LII of the Calcutta University Regulations relating to the Syllabus in Geology for candidates in Civil Engineering only at the B.E. Examination have been sanctioned by the Government of Bengal and will be given effect to from the Examination of 1933:—

Geology.

(For candidates in Civil Engineering only.)

(*a*) *General Geology.*—General characters of the simple rock types; igneous, sedimentary and mentamorphic rocks. Denudation by the weather, river, glaciers, and the sea; transportation and deposition of detritus; lamination; stratification, etc., consolidation; general description of grits, sandstones, shales, clays, conglomerates, lime-stone, etc., volcanoes; form structure, causes and products; earthquakes and secular movements of the earth's crust. Isostasy. Mode of occurrence of eruptive rocks; plutonic and hypabyssal rocks; batholiths, zenoliths, etc., sills and intrusive sheets, necks or pipes, dykes, veins, etc., Metamorphism; degrees of metamorphism; thermal or contact metamorphism; dynamic metamorphism; slaty cleavage; metamorphic rocks.

Details of rock structures; cleavage planes; joints dislocations; faults; conformable and unconformable strata; overlap; lateral variation in strata.

To be accompanied by exercises in the recognition of rocks from hand specimens.

(*b*) *Structural Geology.*—Results of earth movements, geosynclines, formation of basins, domes, folding, over-folding, etc., normal and reverse faults, hade throw and heave; dip and strike faults and their effects on outcrops; oblique faults, step, trough and ridge faults; origin of faults.

Outcrops, effects of topography on outcrops, tracing outcrops, thickness of strata and their measurement.

To be accompanied by exercises in constructing geological sections, solution of problems in geological structures and practice in the reading of geological maps.

(*c*) *Plæontological Geology.*—Fossils, their mode of preservation, rocks in which they occur; classification of the important genera of fossil animals and plants, importance of fossils in stratigraphical geology.

(*d*) *Stratigraphical Geology.* — Leading principles of stratigraphy. A general outline of Indian stratigraphy.

Petrography; essential and necessary constituents; classification of rocks; characters and essential constituents of the more important Indian rocks.

(*e*) *Crystallography.* — Systems. Simple forms and combinations. Isomorphism.

To be accompanied by examination of hand specimens.

(*f*) *Mineralogy.*—Physical properties of minerals in general. Particular description of the following:—

Elements—Graphite, Diamond, Gold.

Sulphides—Pyrites, galena, sphalerite, chalcopyrite.

Oxides—Gerundum, hematite, magnetite, quartz, cassiterite, limonite, manganese ores, bauxite.

Oxysalts—

(1) *Carbonates*—Calcite, dolomite, siderate, arabonite.

(2) *Sulphates*—Anhydrite, gypsum.

(3) *Phosphates*—Apatite.

(4) *Silicates*—Tourmaline, olivine, garnet, muscovite, biotite, talc, serpentine, pyroxene, amphibole, the felspars.

Halid salts—Halite, fluorite.

To be accompanied by exercises in the recognition of these minerals from hand specimens.

(*g*) *Ore deposits.*—Form. Outline of the modes of origin of ore deposits.

(*h*) *Engineering Geology.*—Road metal, ballast, building stones. Surface and underground water supply. Dams and reservoirs. Tunnels, and cuttings. Foundations, stability of hill slopes, building sites. Taking of bore-hole logs. Determination of under-ground structure from bore-hole data. Quarrying.

A. N. MUKHERJEE, *Registrar.*

Board of Intermediate and Secondary Education, Dacca.

NOTIFICATIONS.

Ramna, the 30th June 1931.

No. 3198.—The following students are awarded junior scholarships on the results of the High School Examination, 1931, conducted by the Board of Intermediate and Secondary Education, Dacca. The scholarships take effect from the 1st June 1931, and are tenable for two years.

(Principals of colleges are requested to report to the Secretary, Board of Intermediate and Secondary Education, Dacca, the names of the holders of scholarships as soon as they are admitted. No scholarship can be drawn until this information is available):—

One First Grade Scholarship of Rs. 20 a month.

Kamala Gupta, Eden Intermediate College.

One Second Grade Scholarship of Rs. 15 a month.

Mukundachandra Chakrabarti, Dacca Collegiate School.

Two Third Grade Scholarships of Rs. 10 a month each.

Asuram Sur, Pogose School.

Abu Sayid Muhiuddin Ahmad, Armenitola High School.

Special Junior Scholarship for Muhammadans.

No. 3199.—The following student is awarded the above scholarship for Muhammadans on the results of the High School Examination, 1931, conducted by the Board of Intermediate and Secondary Education, Dacca. The scholarship takes effect from the 1st June 1931, and is tenable for two years.

(The Principal of the college to which the scholarshipholder is admitted is requested to report the fact of his admission to the Secretary, Board of Intermediate and Secondary Education, Dacca. The scholarship cannot be drawn until this information is available):—

One Special Scholarship of Rs. 10 a month.

Khwaja Muhammad Idris, Moslem High School.

Three Special Junior Scholarships for Muhammadans, 1931.

No. 3200.—The following students are awarded the above scholarships for Muhammadans on the results of the High School Examination, 1931, conducted by the Board of Intermediate and Secondary Education, Dacca. The scholarships take effect from the 1st July 1931, and are tenable for two years at any institution within the Dacca University area.

(The head of the institution to which a scholarshipholder is admitted is requested to report the fact of his admission to the Secretary, Board of Intermediate and Secondary Education, Dacca. No scholarship can be drawn until this information is available):—

Three Special Scholarships of Rs. 10 a month each (for poor and deserving candidates).

Abu Salman Muhammad Fazlul Haq, Moslem High School.

Qazi Alaul Haq Dacca Collegiate School.

Muhammad Wajed Ali, Moslem High School.

J. N. ROY, *Secretary (offg.).*

Results of the Government Commercial Course Final Examination, 1931.

Calcutta, the 13th July 1931.

The following candidates have passed the Final Examination in the compulsory subjects and in the optional subject or subjects noted against each : —

(Arranged in order of merit.)

Government Commercial Institute, Calcutta.

1.	Mohit Kumer Ghosh	.. Typewriting (30 words per minute).
2.	Brojendra Krishna Mukerjee	.. Shorthand (80 words per minute). Typewriting (40 words per minute).
3.	Nisha Kanta Roy	.. Shorthand (80 words per minute). Typewriting (35 words per minute).
4.	V. Ranganathan	.. Shorthand (100 words per minute). Typewriting (45 words per minute).
5.	Tarak Nath Ghosh	.. Typewriting (30 words per minute).
6.	Profulla Kumar Bhattacharyya.	
7.	Gunendra Kumar Mitra	.. Typewriting (35 words per minute).
8.	Anil Kumar Mukherjee.	
9.	Bata Krishna Banarji.	
10.	Tulsi Das Ganguli.	
11.	Pulin Behari Raut	.. Typewriting (30 words per minute).
12.	Sudhansu Kumar Bose. Anath Kumar Bandyopadhyay Chandra Bushan Mukherji.	.. Shorthand (80 words per minute). Typewriting (30 words per minute).
13.	Haramohan Bhattacharyya.	
14.	Anil Kumar Banerjee	.. Typewriting (30 words per minute).
15.	Barindra Nath Pande.	
16.	Amiya Kumar Ghosh.	
17.	Badal Chandra Mookerjee	.. Typewriting (40 words per minute).
18.	Ataur Rahman.	
19.	Sailesh Chandra Sen Gupta	.. Typewriting (30 words per minute).
20.	Dwijendra Narayan Bhunia. Nalini Kanta Mukhopadhyay.	
21.	Prabir Kumar Sen.	
22.	Rajendra Nath Maitra	.. Typewriting (35 words per minute).
23.	Jehangir Kabeer.	
24.	Balai Chand Kundu	.. Typewriting (30 words per minute).
25.	Sudhir Kumar Dutta.	
26.	Sachindranath Chatterjee.	
27.	Nibaran Chandra Pande.	
28.	Sudhansu Kumer Banerjee.	
29.	Ramendra Nath Tagore.	
30.	Subodh Kumar Mitra.	
31.	Shib Chandra Sen	.. Typewriting (35 words per minute).

N.B.—V. Ranganathan has passed in Commercial Tamil instead of in Commercial Bengali.

Ataur Rahman has passed in Commercial Urdu instead of in Commercial Bengali.

M. K. GHOSH,

Secretary, Government Commercial Institute Board.

The Calcutta Gazette

THURSDAY, JULY 23, 1931.

Part II

Advertisements.

Notices.

Advertisements, Notices, etc., intended for insertion in this Part of the Gazette cannot be received after noon of Saturday.

IMPERIAL BANK OF INDIA.

Statement of the affairs of the Imperial Bank of India on the 10th July 1931.

LIABILITIES.

	Rs.	A.	P.
Subscribed Capital ..	11,25,00,000	0	0
Capital paid up ..	5,62,50,000	0	0
Reserve ..	5,40,00,000	0	0
Public Deposits ..	17,82,30,000	0	0
Other Deposits ..	64,82,24,000	0	0
Loans against securities per contra ..	....		
Loans from the Government of India under section 20 of the Paper Currency Act, against Inland bills discounted and purchased per contra ..	....		
Contingent liabilities ..	....		
Sundries ..	1,38,52,000	0	0
	95,05,65,000	0	0

ASSETS.

	Rs.	A.	P.
Government Securities ..	29,08,15,000	0	0
Other authorized securities under the Act ..	2,64,98,000	0	0
Ways and Means Advances to the Government of India ..	....		
Loans ..	9,78,16,000	0	0
Cash Credits ..	29,38,05,000	0	0
Inland bills discounted and purchased ..	3,59,59,000	0	0
Foreign bills discounted and purchased ..	40,21,000	0	0
Bullion ..	....		
Dead stock ..	2,72,05,000	0	0
Liability of constituents for contingent liabilities per contra ..	....		
Sundries ..	59,70,000	0	0
Balances with other Banks ..	29,04,000	0	0
	78,49,93,000	0	0
Cash ..	16,55,72,000	0	0
	95,05,65,000	0	0

The above balance sheet includes :—

	£
Deposits in London ..	1,003,100
Advances and Investments in London ..	916,000
Cash and balances at other Banks in London ..	219,000

Percentage 19·70.

Bank rate 6 per cent.

OSBORNE A. SMITH,
K. M. MACDONALD,
Managing Governors.

LAND SALE NOTICE.

Advertisement of sale.

NOTICE is hereby given that the proprietary right of Government, as specified in the condition of sale below, to the undermentioned estate situated in the district of Hooghly will be put up to sale at the Hooghly Collectorate on the 24th September 1931, corresponding to the 7th Aswin 1338 B S.

The purchaser will be subject to the following conditions of sale :—

Conditions of sale.

1st—The estate is to be sold to the highest bidder above the upset price, which will be fixed by the Collector at the time of sale. The purchaser of this estate will be considered as the proprietor of the estate, and the entire proprietary right of Government in such estate will be transferred to him revenue free.

2nd - The sale will be subject to the existing leases and to the right conferred by the settlement proceedings and by the laws in force and purchasers to be bound to respect the rights of resident cultivators who have signed the schedule of assessment prepared by the revenue authorities.

3rd—If the amount of purchase money do not exceed Rs. 100, the whole amount to be paid down at once.

4th—If the amount of purchase money exceeds Rs. 100, one-fourth of the amount bid to be immediately deposited. If the balance be not paid by the noon of the 15th day after the sale, reckoning the day of sale as one, or if that day be a close holiday, then by the noon of the first succeeding office day, the sale is to be cancelled (the sum deposited being forfeited to Government), and the estate to be again put up to sale at the risk of the defaulting purchaser, after issue of advertisement, as in the case of original sale.

Number on the district roll.	Name of estate and pargana.	Approximate area in acres.	Government revenue assessed.
			Rs. A. P.
4707	Shoakhala, pargana Balia	·00126	1 2 0
4150	Gholepura, pargana Habili	·75	1 12 0
4232	Satberia, pargana Jahanabad	·20	1 8 0
4246	Hamirbati, pargana Byrah	·07	2 0 0
4252	Serajabad *alias* Mayapur, pargana Jahanabad	·51	2 0 0
5014	Bali, pargana Byrah	·06	1 0 0

[ILLEGIBLE], *for* Collector.

Hooghly, the 10th July 1931.

SALE NOTICE.

In the Court of the 1st Sub-Judge, Pabna.

MORTGAGE EXECUTION CASE No. 51 of 1930.

Faridpur Loan Office, Limited, decree-holder,

versus

Suresh Chandra Saha Choudhuri and others, judgment-debtors.

IN the above mortgage execution case, the properties of the judgment-debtors, as detailed below, will be sold by the Nazir of the Pabna District Judge's Court at 12 noon on the 17th August 1931. The decretal amount including the costs of execution is Rs. 2,62,001 4 as. 3 pies.

Lot 1(*Ka*). Zamindari right in taraf Moram consisting of eight annas share of villages Nijamaram *alias* Idilpur Chak Laxmipur, Chak Maram Jalkar Chiknaadkanduha, Sota in river Atrai and four annas of Bildekshi and 1 anna 6½ gds. 2 karas share of Chandnna Hatmaram *alias* Idilpur and sixteen annas of Jagannathpur, Megharpara Jhabjhabia in tauzi No. 173, separate account No. 2, in pargana Shonabaju of Pabna Collectorate, Sub-Registry Chatmohar. Revenue Rs. 402 2 as. and police Rs. 4 6as., total Rs. 406 9 as.

(*Kha*). Putni right held under Monmohan Majumdar and others bearing a rental of Rs. 570-11-10 gds. standing in the name of Ram Lal Moitra, being eight annas share in village Idilpur, Chak Luxmipur, Chak Maram and four annas share of Jalkar Bildeksho and one anna 6½ gds. 2 kranti share of Hat Maram being mauza No. 207, khatian Nos. 66 chha, 73, 79 and 92.

Lot 2. Zamindari right of sixteen annas share in pargana Danthia Jahangirpur, tauzi No. 193, taluk Sanaidaha Kazipur and other villages of Pabna Collectorate, Sub-Registry Salanga. Revenue Rs. 260 12 as.

Lot 3. Zamindari right of sixteen annas in pargana Sonabaju, tauzi No. 276, separate account No. 2, Kismat Guakhara of Pabna Collectorate, Sub-Registry Chatmohar, mauza Negri Krishnarampur. Revenue Rs. 15.

Lot 4. Zamindari right of sixteen annas in pargana Sonabaju, tauzi No. 276, separate account No. 3, kismat Guakhara, mauza Pathrailhat *alias* Pathailhat, Pabna Collectorate, Sub-Registry Chatmohar. Revenue Rs. 43-14 annas.

Lot 5. Zamindari right of sixteen annas in pargana Katarmahal, tauzi No. 205, separate account No. 3, Gobindopur Chawk, mauza Sajnai and others, Sub-Registry Chatmohar, Pabna Collectorate. Revenue Rs. 62 8 annas.

Lot 6. Zamindari right of sixteen annas in pargana Katarmahal, tauzi No. 205, separate account No. 5, mauza Sajnai and others, Sub-Registry Chatmohar, Pabna Collectorate, bearing a rental of revenue of Rs. 31 4 annas.

Lot 7. Zamindari right of sixteen annas in pargana Sonabaju, tauzi No. 291, separate account No. 11, mauza Kashimpur *alias* Kashimpur Bhanguria and Khorda Harinbari and Choubaria within Sub-Registry Chatmohar, Pabna Collectorate. Revenue Rs. 1,350 7 annas.

Lot 8. Zamindari right of sixteen annas in pargana Sonabaju, tauzi No. 291, separate account No. 12, mauza Khalishakhali, Sub-Registry Chatmohar, Pabna Collectorate. Revenue Rs. 27 6 annas.

Lot 9. Zamindari right of sixteen annas in pargana Sonabaju, tauzi No. 291, separate account No. 81, sixteen annas of mauza Pusurpar of Sub-Registry Chatmohar, and 8 annas of mauza Arua Pangashi, Sub-Registry Ullapara. Revenue Rs. 118.

Lot 10. Zamindari right of sixteen annas in pargana Sonabaju, tauzi No. 291, separate account No. 83, eight annas of mauza Badaklolanpur, Sub-Registry Chatmohar, Pabna Collectorate. Revenue Rs. 19 12 annas.

Lot 11. Zamindari right of sixteen annas in Abadpoyra, tauzi No. 209/25/1, revenue-free lot No. 62/1/C, in 24-Parganas Collectorate, Sub-Registry Matla, in the Sundarbans, land measuring 4,180 bighas permanently settled by Government as revenue-free.

Lot 12. Sixteen annas share of a three-storied building with land measuring 10 cottahs, being premises at 19, Kumartuli Street, Calcutta.

Lot 13. Putni right of sixteen annas in tauzi No. 275 of pargana Sonabaju, Sub-Registry Chatmohar, Pabna Collectorate, mauza Parshadanga and Parabaludiara, including Jalkar held under Prasanna Nath Choudhuri of Haripur at a rental of Rs. 227 and under Girija Govinda Choudhuri of the same place at a rental of Rs. 80.

Lot 14. Putni right of sixteen annas in tauzi No. 495 of pargana Sonabaju, mauza Parshadanga and Parabaludiara including Jalkar held under Basanta Kumar Bagchi of Haripur at a rental of Rs. 48 and also zamindari right of same mauza, share 6 gds., the revenue of which is Rs. 67 9 as. (total revenue).

Lot 15. Putni right of eight annas in tauzi Nos. 494 and 495, pargana Sonabaju, mauza Parshadanga and Parabaludiara, including fishery right held under Haridas Talapatra of Guakhara at a rental of Rs. 125.

Lot 16. Putni right of sixteen annas in tauzi No. 496 of pargana Sonabaju, mauza Parshadanga and Para-Baludiara, including Jalkar held under Bhabani Charan Choudhuri of Haripur at a rental of Rs. 600 (Samil Jama in tauzi 882 in lot 17).

Lot 17. Putni right of sixteen annas in tauzi No. 882, pargana Sonabaju, mauza Parshadanga and Parabaludiara with Jalkar held under Bhabani Charan Choudhuri of Haripur at a rental of Rs. 600 (Samil Jama in tauzi 496 with lot 16).

Lot 18. Putni right of sixteen annas in tauzi No. 881, pargana Sonabaju, mauza Parshadanga and Parabaludiara held under Benimahab Choudhuri of Haripur at a rental of Rs. 160.

Lot 19. Putni right of sixteen annas in tauzi No. 883 of pargana Sonabaju, mauza Parshadanga and Parabaludiara, including Jalkar held under Bamasundari Debya of Haripur at a rental of Rs. 36 and under Baroda Charan Choudhuri of Haripur at a rental of Rs. 38 10 annas.

Lot 20. Eight annas putni right in tauzi No. 1930-31 in pargana Sonabaju, mauza Parshadanga and Parabaludiara, including Jalkar right held under Manindra Nath Lahiri of Haripur at a rental of Rs. 167 10 as. 6p.

Lot 20(*ka*). Eight annas share of pucca dwelling houses with tank, garden, canister-tin huts, etc., by Sarat Chandra Saha Choudhuri held on partition by the judgment-debtors in mauza Parshadanga held in putni right under Manindra Nath Lahiri of Haripur at a rental of Rs. 167 10as. 6p.

Lot 21. Permanent heritable tenure in mauza Chawk Ramjiban in tauzi No. 76, lot Sankarpur (pargana Santosh), Dinajpur Collectorate, Balurghat Sub-Registry, at a rental of Rs. 42-9-6 pies under Rajendra Nath Sanyal and Maharaj Sing, zamindars, on which one-storied building and other huts belonging to the judgment-debtors have been constructed.

J. N. SEN, Sub-Judge.

TARAK NATH MAITRA (Rai Sahib), B.L.,
Decree-holder's pleader.

Pabna, the 10th July 1931. (1452—1)

In the High Court of Judicature at Fort William in Bengal, in insolvency.

NOTICE OF ADJUDICATION ORDER.

No. 150 of 1931.

Re Kanaiyalal Khettry and Bholanath Khettry, lately carrying on business in co-partnership in piece-goods under the name and style of Kala Chand & Sons at No. 50, Clive Street, in the town of Calcutta. *Ex parte* the creditor.

Ghosh, Hazra & Co., creditor's solicitors.

ON the 3rd day of July 1931, an order was made by the High Court of Judicature at Fort William in Bengal in its insolvency jurisdiction adjudging the abovenamed as an insolvent.

NOTE.—All debts due to the estate should be paid to me.

Dated this 16th day of July 1931.

G. M. FALKNER, Official Assignee.

In the High Court of Judicature at Fort William in Bengal, in insolvency.

NOTICE OF ADJUDICATION ORDER.

No. 164 of 1931.

Re Nalin Chandra Chatterjee, residing at No. 72, Manicktolla Street, in the town of Calcutta, carrying on business in mustard oil at No 80-1, Oroy Street, in Calcutta aforesaid, under the name and style of Nalin Chandra Chatterjee, *ex parte* the debtor.

S. K. Kerr, debtor's solicitor.

ON the 3rd day of July 1931, an order was made by the High Court of Judicature at Fort William in Bengal in its insolvency jurisdiction adjudging the abovenamed as an insolvent.

NOTE.—All debts due to the estate should be paid to me.

Dated this 13th day of July 1931.

G. M. FALKNER, Official Assignee.

In the High Court of Judicature at Fort William in Bengal, in insolvency.

NOTICE OF ADJUDICATION ORDER.

No. 165 of 1931.

Re Anadi Nath Ganguli, residing and lately carrying on business under the name and style of A. N. Ganguli and Bros. at No. 41, Clive Street, in the town of Calcutta, as order-suppliers and at present of no occupation, *ex parte* the debtor.

Mitter and Bural, debtor's solicitors.

ON the 3rd day of July 1931, an order was made by the High Court of Judicature at Fort William in Bengal in its insolvency jurisdiction adjudging the abovenamed as an insolvent.

NOTE.—All debts due to the estate should be paid to me.

Dated this 13th day of July 1931.

G. M. FALKNER, Official Assignee.

In the High Court of Judicature at Fort William in Bengal, in insolvency.

NOTICE OF ADJUDICATION ORDER.

No. 166 of 1931.

Re Percy Paul, residing at No. 17, Sooterkins Street, in the town of Calcutta, a telegraphist in the Central Telegraph Office, Calcutta, *ex parte* the debtor in person.

ON the 6th day of July 1931, an order was made by the High Court of Judicature at Fort William in Bengal in its insolvency jurisdiction adjudging the abovenamed as an insolvent.

NOTE.—All debts due to the estate should be paid to me.

Dated this 13th day of July 1931.

G. M. FALKNER, Official Assignee.

In the High Court of Judicature at Fort William in Bengal, in insolvency.

NOTICE OF ADJUDICATION ORDER.

No. 168 of 1931.

Re Roy Goldie Upson, residing at 57-1, Free School Street, in the town of Calcutta, formerly an assistant at the "Daily Chronicle," Delhi, now unemployed, *ex parte* the debtor in person.

ON the 7th day of July 1931, an order was made by the High Court of Judicature at Fort William in Bengal in its insolvency jurisdiction adjudging the abovenamed as an insolvent.

NOTE.—All debts due to the estate should be paid to me.

Dated this 14th day of July 1931.

G. M. FALKNER, Official Assignee.

In the High Court of Judicature at Fort William in Bengal, in insolvency.

NOTICE OF ADJUDICATION ORDER.

No. 160 of 1931.

Re M. V. Mohamed Usoof, residing and lately carrying on business as commission agent and dealer in rice, chillies, grams and other country produce at No. 3, Balai Dutt Street, in the town of Calcutta, and at present having no employment, *ex parte* the debtor.

J. M. Chaudhuri, debtor's solicitor.

ON the 7th day of July 1931, an order was made by the High Court of Judicature at Fort William in Bengal in its insolvency jurisdiction adjudging the abovenamed as an insolvent.

NOTE.—All debts due to the estate should be paid to me.

Dated this 14th day of July 1931.

G. M. FALKNER, Official Assignee.

In the High Court of Judicature at Fort William in Bengal, in insolvency.

NOTICE OF ADJUDICATION ORDER

No. 170 of 1931.

Re Carlisle Douglas Mylne, residing at No. 15, Marsden Street, in the town of Calcutta, a draughtsman, *ex parte* the debtor in person.

ON the 8th day of July 1931, an order was made by the High Court of Judicature at Fort William in Bengal in its insolvency jurisdiction adjudging the abovenamed as an insolvent.

NOTE.—All debts due to the estate should be paid to me.

Dated this 14th day of July 1931.

G. M. FALKNER, Official Assignee.

In the Court of the Sub-Judge at Asansol.

Section 19(2) of the Provincial Insolvency Act, V of 1920.

INSOLVENCY CASE No. 40 of 1931.

NOTICE is hereby given to his creditors that the insolvency petition filed by T. A. Holmes, driver, East Indian Railway, Asansol, has been admitted and the 7th August 1931 has been fixed for hearing thereof.

A. K. CHAKRAVERTY, Sub-Judge.

Asansol, the 9th July 1931. (1482—1)

ORDER ANNULLING ADJUDICATION.

Section 35 of the Provincial Insolvency Act, V of 1920.

In the Court of the District Judge at Chittagong.

INSOLVENCY APPLICATION No. 6 of 1930.

Naju Mea, son of Arbanali of Chikandandi, police-station Hathazari, Chittagong, applicant.

THE insolvent not having appeared before the Court on the date fixed, it is ordered that the order of adjudication, dated 12th June 1931, against Naju Mea of Chikandandi, be and the same is hereby annulled.

Dated this 21st day of April 1931.

J. YOUNIS, District Judge.

(1353—1)

In the Court of the District Judge of Dacca.

INSOLVENCY CASES Nos. 20 AND 21 of 1931.

Pran Ballav Basak and others, petitioning creditors,

versus

Pramatha Nath Das, debtor, opposite party.

WHEREAS Pran Ballav Basak, son of late Chand Mohan Basak, Madan Mohan Basak, son of late Makhan Lal Basak, of Lalchand Makim's Lane, police-station Sutrapur, district Dacca, and Jagannath Revati Mohan Saha, firm of Chowk Bazar, police-station Lalbagh, district Dacca, creditors, have applied to this Court for adjudging Pramatha Nath Das, son of late Sita Nath Das, of Walter Road, police-station Sutrapur, district Dacca, an insolvent, the 10th August 1931 next has been fixed for the hearing of the aforesaid petition and objection by the debtor.

H. D. BENJAMIN, *for* District Judge.

Dacca, the 10th July 1931. (1496—1)

In the Court of the District Judge of Dacca.

INSOLVENCY CASE No. 27 of 1931.

Jnanendra Mohan Guha, petitioner.

WHEREAS Jnanendra Mohan Guha, son of late Hari Mohan Guha, resident of Outshahi, police-station Tongibari, district Dacca, at present resident of 3, Koilash Ghosh Lane, police-station Sutrapur, district Dacca, has applied to this Court to be adjudged an insolvent. The 11th August 1931 next has been fixed for the hearing of the aforesaid petition, examination of the petitioner and the creditors.

H. D. BENJAMIN, *for* District Judge.

Dacca, the 10th July 1931. (1497—1)

In the Court of the District Judge of Hooghly.

NOTICE is hereby given, under clause (2) of section 12 of the Provincial Insolvency Act, V of 1920, to his creditors that the insolvency petition of Ram Chandra Bandopadhya, son of Jogendra Nath Banerjee, of Atra, thana Jangipara, district Hooghly, has been admitted by this Court as No. 41 of 1931, and that the 8th August 1931 has been fixed for the hearing thereof.

S. SEN, District Judge.

Chinsura, the 8th July 1931. (1493—1—1502)

In the Court of the District Judge of Hooghly.

INSOLVENCY PETITION No. 74 OF 1930.

NOTICE is hereby given that Debendra Nath Nandy, son of late Durgadas Nandy of Hooghly-Bali, thana Chinsura, district Hooghly, was on the 19th day of June 1931 adjudged an insolvent. The 10th day of August 1931 has been fixed for framing a schedule and creditors are required to prove their claims on that day.

S. SEN, District Judge.

Chinsura, the 11th July 1931. (1504—1)

In the Court of the District Judge of Hooghly.

NOTICE is hereby given, under clause (2) of section 12 of the Provincial Insolvency Act, V of 1920, to his creditors that the insolvency petition of Kesore Missir, son of late Bhagwan Das Missir, of Bansberia, thana Magra, district Hooghly, has been admitted by this Court as No. 45 of 1931 and that the 8th August 1931 has been fixed for the hearing thereof.

S. SEN, District Judge.

Chinsura, the 10th July 1931. (1505—1—1507)

In the Court of the Addl. Sub-Judge, Malda.

INSOLVENCY CASE No. 3 OF 1931.

NOTICE is hereby given under the Provincial Insolvency Act V of 1920 to his creditor that the petition of Jageswar Singh, son of late Baneswar Singh, of Nagarai-Lakhipur, police-station Englishbazar, district Malda, has been admitted by this office in Insolvency Case No. 3 of 1931 and that the 25th day of July 1931 has been fixed for hearing thereof.

N. N. GUHA, Addl. Sub-Judge.

Malda, the 6th July 1931. (1531—1)

In the Court of the District Judge of Murshidabad.

INSOLVENCY CASE No. 26 OF 1931.

Krishna Dulal Dhar, petitioning creditor.

NOTICE is hereby given to all concerned that the abovenamed creditor has applied to this Court for an order of adjudication as insolvent against Shyama Charan Nath of Shibganj, now residing at Raghunathganj, police-station Raghunathganj, district Murshidabad, and that the 8th day of August 1931 has been fixed for hearing of the application.

A. F. M. RAHMAN, District Judge.

Berhampore, the 9th July 1931. (1468—1—1488)

In the Court of the District Judge of Mymensingh.

INSOLVENCY CASE No. 54 OF 1930.

NOTICE is hereby given that the order of adjudication, dated the 22nd day of November 1930, against Joy Chandra Chakravarti, son of late Chandra Nath Chakravarti, of Jasodal, police-station Kishoreganj, district Mymensingh, be and the same is hereby annulled.

R. F. LODGE, District Judge.

Mymensingh, the 13th July 1931. (1500—1)

In the Court of the District Judge of Rangpur.

INSOLVENCY CASE No. 12 OF 1931.

MANEY MAHMUD, son of late Amiruddin, of Amrulbari, police-station Jaldhaka in the district of Rangpur, was on the 11th day of July 1931 adjudged an insolvent by this Court. He will apply for discharge within six months.

A. M. AHMAD, District Judge.

Rangpur, the 14th July 1931. (1501—1)

In the Court of the District Judge of 24-Parganas.

INSOLVENCY CASE No. 36 OF 1931.

Rajendra Chandra Bhadra of 9, Debendra Ghose Road, Bhowanipore, 24-Parganas, applicant.

To Radhakissen Lone Koron of Khangraputty, Burrabazar, Calcutta, and others, creditors.

ON the 2nd day of July 1931, it was ordered that the matter of the petition of the applicant be heard on the 10th day of August 1931 and that the said applicant do attend to be examined by this Court on that date.

R. R. GARLICK, District Judge.

Alipore, the 4th July 1931. (1436—1—1491)

ORDER ANNULLING ADJUDICATION.

Section 43 of the Provincial Insolvency Act, V of 1920.

In the Court of the District Judge at Alipore.

INSOLVENCY APPLICATION No. 28 OF 1930.

Sukkhan Ram Shaw, applicant.

WHEREAS Sukkhan Ram Shaw of 5/3, Ramanath Paul Road, Kidderpore, 24-Parganas, debtor, does neither appear nor apply for his discharge within the specified time fixed for hearing, it is ordered that the order of adjudication, dated 16th June 1930, against the debtor be and the same is hereby annulled.

Dated this 29th day of June 1931.

R. R. GARLICK, District Judge.

ORDER ANNULLING ADJUDICATION.

Section 43 of the Provincial Insolvency Act, V of 1920.

In the 4th Court of the Sub-Judge at Alipore.

INSOLVENCY APPLICATION No. 46 OF 1928.

Narayan Chandra Mal, applicant.

WHEREAS Narayan Chandra Mal of 9, Gobinda Addya Road, Chetla, 24-Parganas, debtor, does neither appear nor apply for his discharge within the specified period fixed for hearing, it is ordered that the order of adjudication, dated 6th June 1928, against the debtor be and the same is hereby annulled.

Dated this 6th day of July 1931.

S. N. ROY, Sub-Judge.

ORDER ANNULLING ADJUDICATION.

Section 43 of the Provincial Insolvency Act, V of 1920.

In the 4th Court of the Sub-Judge at Alipore.

INSOLVENCY APPLICATION No. 240 OF 1930.

Kalika Chamar of Hazinagore, police-station Naihati, district 24-Parganas, applicant.

WHEREAS Kalika Chamar of Hazinagore, police-station Naihati, debtor, does neither appear nor apply for his discharge within the specified time fixed for hearing, it is ordered that the order of adjudication, dated 3rd January 1931, against the debtor be and the same is hereby annulled.

Dated this 3rd day of July 1931.

S. N. ROY, Sub-Judge.

ORDER ANNULLING ADJUDICATION.

Section 43 of the Provincial Insolvency Act, V of 1920.

In the 4th Court of the Sub-Judge at Alipore.

INSOLVENCY APPLICATION No. 242 OF 1930.

Messrs. Clarke Rawlins, Ker & Co., Solicitors, 6, Old Post Office Street, Calcutta, applicant.

WHEREAS Choteylal Agarwala of Khorda, 24-Parganas, debtor, does neither appear nor apply for his discharge within the specified time fixed for hearing, it is ordered that the order of adjudication, dated 3rd January 1931, against the debtor be and the same is hereby annulled.

Dated this 3rd day of July 1931.

S. N. ROY, Sub-Judge.

ORDER ANNULLING ADJUDICATION.

Section 43 of the Provincial Insolvency Act, V of 1920.

In the 4th Court of the Sub-Judge at Alipore.

INSOLVENCY APPLICATION No. 318 OF 1930.

Kishorymohan Roy Chaudhury, applicant.

WHEREAS Kishorymohan Roy Chaudhury of Saonta, Bagnan, at present 4, Pamar Bazar Road, Behaghata, 24-Parganas, debtor, does neither appear nor apply for his discharge within the specified time fixed for hearing, it is ordered that the order of adjudication, dated 3rd January 1931, against the debtor be and the same is hereby annulled.

Dated this 11th day of July 1931.

S. N. ROY, Sub-Judge.

ORDER OF ADJUDICATION.

Section 27 of the Provincial Insolvency Act, V of 1920.

In the 4th Court of the Sub-Judge at Alipore.

INSOLVENCY APPLICATION No. 433 OF 1930.

PURSUANT to a petition, dated 15th December 1930, filed by Ganpat Roy of Cossipore and Bisseswarlal of Alambazar, partners of the firm Ganpat Roy Bisseswarlal at Midnapore, debtors, and on the application of the debtors themselves and on reading their application and hearing their pleader, it is ordered that the debtors be and the said debtors are hereby adjudged insolvents.

It is further ordered that the debtors do apply for their discharge within six months from this date.

Dated this 19th day of May 1931.

S. N. ROY, Sub-Judge.

(1183—1—1492)

ORDER OF ADJUDICATION.

Section 27 of the Provincial Insolvency Act, V of 1920.

In the 4th Court of the Sub-Judge at Alipore.

INSOLVENCY APPLICATION No. 441 OF 1930.

PURSUANT to a petition, dated 18th December 1930, filed by Hari Bhushan Biswas of 8, Srish Chandra Chaudhury Lane, Chitpur, 24-Parganas, debtor, and on the application of the debtor himself and on reading his application and hearing his pleader, it is ordered that the debtor be and the said debtor is hereby adjudged insolvent.

It is further ordered that the debtor do apply for his discharge within six months from this date.

Dated this 19th day of May 1931.

S. N. ROY, Sub-Judge.

(1184—1—1493)

ORDER OF ADJUDICATION.

Section 27 of the Provincial Insolvency Act, V of 1920.

In the 4th Court of the Sub-Judge at Alipore.

INSOLVENCY APPLICATION No. 21 OF 1931.

PURSUANT to a petition, dated 14th January 1931, filed by Mullu Show of 20, Pamar Road, Entally, 24-Parganas, debtor, and on the application of the debtor himself and on reading his application and hearing his pleader, it is ordered that the debtor be and the said debtor is hereby adjudged insolvent.

It is further ordered that the debtor do apply for his discharge within six months from this date.

Dated this 19th day of May 1931.

S. N. ROY, Sub-Judge.

(1185—1—1494)

ORDER OF ADJUDICATION.

Section 27 of the Provincial Insolvency Act, V of 1920.

In the 4th Court of the Sub-Judge at Alipore.

INSOLVENCY APPLICATION No. 23 OF 1931.

PURSUANT to a petition, dated 14th January 1931, filed by Munshi Abdul Mannaf of 37, Pipe Road, Ekbalpore, 24-Parganas, debtor, and on the application of the debtor himself and on reading his application and hearing his pleader, it is ordered that the debtor be and the said debtor is hereby adjudged insolvent.

It is further ordered that the debtor do apply for his discharge within six months from this date.

Dated this 19th day of May 1931.

S. N. ROY, Sub-Judge.

(1186—1—1495)

ORDER OF ADJUDICATION.

Section 27 of the Provincial Insolvency Act, V of 1920.

In the 4th Court of the Sub-Judge at Alipore.

INSOLVENCY APPLICATION No. 59 OF 1931.

PURSUANT to a petition, dated 5th February 1931, filed by Asoke Kumar Mukherjee of Rajipur, Hasnabad, 24-Parganas, debtor, and on the application of the debtor himself and on reading his application and hearing his pleader, it is ordered that the debtor be and the said debtor is hereby adjudged insolvent.

It is further ordered that the debtor do apply for his discharge within six months from this date.

Dated this 19th day of May 1931.

S. N. ROY, Sub-Judge.

(1187—1—1496)

ORDER OF ADJUDICATION.

Section 27 of the Provincial Insolvency Act, V of 1920.

In the 4th Court of the Sub-Judge at Alipore.

INSOLVENCY APPLICATION No. 64 OF 1931.

PURSUANT to a petition, dated 9th February 1931, filed by Srimotty Golapmoni Dasi, wife of Lakshmon Chandra Singh, of Patipukur, Dum-Dum, 24-Parganas, debtor, and on the application of the debtor herself and on reading her application and hearing her pleader, it is ordered that the debtor be and the said debtor is hereby adjudged insolvent.

It is further ordered that the debtor do apply for her discharge within six months from this date.

Dated this 19th day of May 1931.

S. N. ROY, Sub-Judge.

(1188—1—1497)

ORDER OF ADJUDICATION.

Section 27 of the Provincial Insolvency Act, V of 1920.

In the 4th Court of the Sub-Judge at Alipore.

INSOLVENCY APPLICATION No. 65 of 1931.

PURSUANT to a petition, dated 9th February 1931, filed by Lakshman Chandra Sing of Patipukur, Dum Dum, 24-Parganas, debtor, and on the application of the debtor himself and on reading his application and hearing his pleader, it is ordered that the debtor be and the said debtor is hereby adjudged insolvent.

It is further ordered that the debtor do apply for his discharge within six months from this date.

Dated this 19th day of May 1931.

S. N. ROY, Sub-Judge.

(1189—1—1498)

ORDER OF ADJUDICATION.

Section 27 of the Provincial Insolvency Act, V of 1920.

In the 4th Court of the Sub-Judge at Alipore.

INSOLVENCY APPLICATION No. 66 of 1931.

PURSUANT to a petition, dated 9th February 1931, filed by Gourpada Nandy of 135-4, Manicktola Main Road, thana Beliaghata, 24-Parganas, debtor, and on the application of the debtor himself and on reading his application and hearing his pleader, it is ordered that the debtor be and the said debtor is hereby adjudged insolvent.

It is further ordered that the debtor do apply for his discharge within six months from this date.

Dated this 19th day of May 1931.

S. N. ROY, Sub-Judge.

(1190 1—1499)

ORDER OF ADJUDICATION.

Section 27 of the Provincial Insolvency Act, V of 1920.

In the 4th Court of the Sub-Judge at Alipore.

INSOLVENCY APPLICATION No. 76 of 1931.

PURSUANT to a petition, dated 17th February 1931, filed by Bibhuty Bhushan De of Pramanik Ghat Road, Cossipore, 24-Parganas, debtor, and on the application of the debtor himself and on reading his application and hearing his pleader, it is ordered that the debtor be and the said debtor is hereby adjudged insolvent.

It is further ordered that the debtor do apply for his discharge within six months from this date.

Dated this 19th day of May 1931.

S. N. ROY, Sub-Judge.

(1191—1—1500)

ORDER OF ADJUDICATION.

Section 27 of the Provincial Insolvency Act, V of 1920.

In the 4th Court of the Sub-Judge at Alipore.

INSOLVENCY APPLICATION No. 108 of 1931.

PURSUANT to a petition, dated 12th March 1931, filed by Abu Bakkar Molla of Satghora, 24-Parganas, debtor, and on the application of the debtor himself and on reading his application and hearing his pleader, it is ordered that the debtor be and the said debtor is hereby adjudged insolvent.

It is further ordered that the debtor do apply for his discharge within six months from this date.

Dated this 19th day of May 1931.

S. N. ROY, Sub-Judge.

(1192—1—1501)

NOTICE TO CREDITORS OF APPLICATION FOR DISCHARGE.

Section 41 (*1*) of the Provincial Insolvency Act, V of 1920.

In the 4th Court of the Sub-Judge at Alipore.

INSOLVENCY CASE No. 303 of 1930.

Haripada Choudhury, residing at Hossain Sardar's Garden, post office Alambazar, police-station Baranagore, district 24-Parganas, applicant.

TAKE notice that the abovenamed insolvent has applied at the Court for his discharge, and that the Court has fixed the 10th day of August 1931, at 11 o'clock, for hearing the application.

Dated this 6th day of July 1931.

S. N. ROY, Sub-Judge.

(1455—1—1513)

NOTICE TO CREDITORS OF APPLICATION FOR DISCHARGE.

Section 41 (*1*) of the Provincial Insolvency Act, V of 1920.

In the 4th Court of the Sub-Judge at Alipore.

INSOLVENCY CASE No. 306 of 1930.

Lalji Guor of Kanchrapara, 24-Parganas, applicant.

TAKE notice that the abovenamed insolvent has applied at the Court for his discharge, and that the Court has fixed the 10th day of August 1931, at 11 o'clock, for hearing the application.

Dated this 4th day of July 1931.

S. N. ROY, Sub-Judge.

(1456—1—1514)

NOTICE TO CREDITORS OF APPLICATION FOR DISCHARGE.

Section 41(*1*) of the Provincial Insolvency Act, V of 1920.

In the 4th Court of the Sub-Judge at Alipore.

INSOLVENCY CASE No. 315 of 1930.

Ram Chandra Dass of 7, Justice Dwarkanath Road, Bhowanipur, applicant.

TAKE notice that the abovenamed insolvent has applied at the Court for his discharge, and that the Court has fixed the 10th day of August 1931, at 11 o'clock for hearing the application.

Dated this 3rd day of July 1931.

S. N. ROY, Sub-Judge.

(1457—1—1515)

In the 4th Court of the Sub-Judge of 24-Parganas.

INSOLVENCY CASE No. 249 of 1931.

Kalipada Mukherjee, 15, Mahes Barik Lane, police-station Beliaghata, district 24-Parganas, applicant.

To Narsingha Agarwala, 23, Garanhatta Street, and others, creditors.

ON the 3rd day of July 1931 it was ordered that the matter of the petition of the applicant be heard on the 17th day of August 1931 and that the said applicant do attend to be examined by this Court on that date.

S. N. ROY, Sub-Judge.

Alipore, the 6th July 1931. (1458—1—1516)

In the 4th Court of the Sub-Judge of 24-Parganas.

INSOLVENCY CASE No. 251 of 1931.

Nathoo Mia, Gauripore, police-station Naihati, district 24-Parganas, applicant.

To Baldeo Sing of Gauripore, police-station Garifa, district 24-Parganas, and others, creditors.

ON the 4th day of July 1931 it was ordered that the matter of the petition of the applicant be heard on the 10th day of August 1931 and that the said applicant do attend to be examined by this Court on that date.

S. N. ROY, Sub-Judge.

Alipore, the 6th July 1931. (1459—1—1517)

In the 4th Court of the Sub-Judge of 24-Parganas.

INSOLVENCY CASE No. 252 OF 1931.

Moni Bhushan Mojumdar of 4, Indra Roy Road, Bhowanipore, 24-Parganas, applicant.

To Kanai Lal Ray of 4, Indra Roy Road, Bhowanipore, and others, creditors.

ON the 2nd day of July 1931 it was ordered that the matter of the petition of the applicant be heard on the 10th day of August 1931 and that the said applicant do attend to be examined by this Court on that date.

S. N. ROY, Sub-Judge.

Alipore, the 4th July 1931. (1460—1—1518)

In the 4th Court of the Sub-Judge of 24-Parganas.

INSOLVENCY CASE No. 253 OF 1931.

H. Fransz, Railway driver, of 12, Loco Quarters, Narikeldanga, 24-Parganas, applicant.

To Mohadeolal and Bros., of 1, Tikiapara Road, Howrah, and others, creditors.

ON the 2nd day of July 1931 it was ordered that the matter of the petition of the applicant be heard on the 10th day of August 1931 and that the said applicant do attend to be examined by this Court on that date.

S. N. ROY, Sub-Judge.

Alipore, the 4th July 1931. (1461—1—1519)

In the 4th Court of the Sub-Judge of 24-Parganas.

INSOLVENCY CASE No. 256 OF 1931.

Sheik Bhortu of 15, Bechulal Road, Entally, 24-Parganas, applicant.

To Hiralal Agorwala of 20, Manicktola Street, Calcutta, and others, creditors.

ON the 2nd day of July 1931 it was ordered that the matter of the petition of the applicant be heard on the 10th day of August 1931 and that the said applicant do attend to be examined by this Court on that date.

S. N. ROY, Sub-Judge.

Alipore, the 4th July 1931. (1462—1—1520)

In the 4th Court of the Sub-Judge of 24-Parganas.

INSOLVENCY CASE No. 257 OF 1931.

Abdul Gofur of 40, Watganj Street, Watganj, 24-Parganas, applicant.

To Ashor Mian of 11, Watganj Street, Kidderpore, Calcutta, and others, creditors.

ON the 2nd day of July 1931 it was ordered that the matter of the petition of the applicant be heard on the 10th day of August 1931 and that the said applicant do attend to be examined by this Court on that date.

S. N. ROY, Sub-Judge.

Alipore, the 4th July 1931. (1463—1—1521)

In the 4th Court of the Sub-Judge of 24-Parganas.

INSOLVENCY CASE No. 262 OF 1931.

Nowrang Chobey, Kharda, police-station Kharda, 24-Parganas, applicant.

To Ramjanam Sing police-station, post office and village Kharda, 24-Parganas, and others creditors.

ON the 6th day of July 1931, it was ordered that the matter of the petition of the applicant be heard on the 17th day of August 1931 and that the said applicant do attend to be examined by this Court on that date.

S. N. ROY, Sub-Judge.

Alipore, the 7th July 1931. (1469—1—1522)

In the 4th Court of the Sub-Judge of 24-Parganas.

INSOLVENCY CASE No. 264 OF 1931.

Shaikh Abdul Latiff, 11, Munshigunge Road, police-station Watgunge, 24-Parganas, applicant.

To Chhungur Sha, 28, Nanda Ghosh Road, post office Salik, Howrah, and others, creditors.

ON the 6th day of July 1931, it was ordered that the matter of the petition of the applicant be heard on the 17th day of August 1931 and that the said applicant do attend to be examined by this Court on that date.

S. N. ROY, Sub-Judge.

Alipore, the 7th July 1931. (1470—1—1523)

In the 4th Court of the Sub-Judge of 24-Parganas.

INSOLVENCY CASE No. 265 OF 1931.

Sew Nath Saw, 23, Cossipore Road, Bibibazar, police-station Chitpore, district 24-Parganas, applicant.

To Fool Chand Sha, 14-3, Pasupati Bose Lane, Calcutta, and others, creditors.

ON the 6th day of July 1931, it was ordered that the matter of the petition of the applicant be heard on the 17th day of August 1931 and that the said applicant do attend to be examined by this Court on that date.

S. N. ROY, Sub-Judge.

Alipore, the 7th July 1931. (1471—1—1524)

In the 4th Court of the Sub-Judge of 24-Parganas.

INSOLVENCY CASE No. 266 OF 1931.

Abdul Rashid, Barabagan, Mitatola, district 24-Parganas, applicant.

To Jamal Khan, Akra Road, Sashi Mistry's House, and others, creditors.

ON the 6th day of July 1931, it was ordered that the matter of the petition of the applicant be heard on the 17th day of August 1931 and that the said applicant do attend to be examined by this Court on that date.

S. N. ROY, Sub-Judge.

Alipore, the 7th July 1931. (1472—1—1525)

ORDER OF ADJUDICATION.

Section 27 of the Provincial Insolvency Act, V of 1920.

In the 4th Court of the Sub-Judge at Alipore.

INSOLVENCY APPLICATION No. 426 OF 1930.

PURSUANT to a petition, dated 9th December 1930, filed by J. H. D'Rozario of 31A, Convent Road, Entally, 24-Parganas, debtor, and on the application of the debtor himself and on reading his application and hearing his pleader, it is ordered that the debtor be and the said debtor is hereby adjudged insolvent.

It is further ordered that the debtor do apply for his discharge within six months from this date.

Dated this 7th day of July 1931.

S. N. ROY, Sub-Judge.

(1473—1—1526)

ORDER OF ADJUDICATION.

Section 27 of the Provincial Insolvency Act, V of 1920.

In the 4th Court of the Sub-Judge at Alipore.

INSOLVENCY APPLICATION No. 101 OF 1931.

PURSUANT to a petition, dated 9th March 1931, filed by Lachmi Shaw of 3/11, Kasinath Dutt Road, Cossipore, 24-Parganas, debtor, and on the application of the debtor himself and on reading his application and hearing his pleader, it is ordered that the debtor be and the said debtor is hereby adjudged insolvent.

It is further ordered that the debtor do apply for his discharge within six months from this date.

Dated this 7th day of July 1931.

S. N. ROY, Sub-Judge.

(1474—1—1527)

ORDER OF ADJUDICATION.

Section 27 of the Provincial Insolvency Act, V of 1920.

In the 4th Court of the Sub-Judge at Alipore.

INSOLVENCY APPLICATION No. 119 OF 1931.

PURSUANT to a petition, dated the 25th March 1931, filed by Abdul Razak of Puranabazar, Titagarh, 24-Parganas, debtor, and on the application of the debtor himself and on reading his application and hearing his pleader, it is ordered that the debtor be and the said debtor is hereby adjudged insolvent.

It is further ordered that the debtor do apply for his discharge within six months from this date.

Dated this 7th day of July 1931.

S. N. ROY, Sub-Judge.

(1475—1—1528)

ORDER OF ADJUDICATION.

Section 27 of the Provincial Insolvency Act, V of 1920.

In the 4th Court of the Sub-Judge at Alipore.

INSOLVENCY APPLICATION No. 156 OF 1931.

PURSUANT to a petition, dated 21st April 1931, filed by Jitendra Kumar Biswas of 12/1, Fakir Haldar Lane, Kalighat, 24-Parganas, debtor, and on the application of the debtor himself and on reading his application and hearing his pleader, it is ordered that the debtor be and the said debtor is hereby adjudged insolvent.

It is further ordered that the debtor do apply for his discharge within six months from this date.

Dated this 30th day of June 1931.

S. N. ROY, Sub-Judge.

(1476—1—1529)

ORDER OF ADJUDICATION.

Section 27 of the Provincial Insolvency Act, V of 1920.

In the 4th Court of the Sub-Judge at Alipore.

INSOLVENCY APPLICATION No. 190 OF 1931.

PURSUANT to a petition, dated 13th May 1931, filed by 'John A. Artin of 5, Linton Street, Entally, 24-Parganas, debtor, and on the application of the debtor himself and on reading his application and hearing his pleader, it is ordered that the debtor be and the said debtor is hereby adjudged insolvent.

It is further ordered that the debtor do apply for his discharge within six months from this date.'

Dated this 7th day of July 1931.

S. N. ROY, Sub-Judge.

(1477—1—1530)

BABU JITENDRANATH GUHA, M.A., B.L., intends to be enrolled as an Advocate, High Court, Calcutta.

(1478—4—1470)

JOGESCHANDRA DE, B.L., intends to practise as an Advocate, Calcutta High Court.

(1487—4—1489)

KALYAN KUMAR BASU, M.A., B.L., intends to be enrolled as an Advocate, Calcutta High Court.

(1488—4—1504)

MR. NRIPENDRANATH DUTTA RAY, B.SC., B.L., wants to be enrolled as an Advocate of the High Court.

(1485—4—1487)

MR. KAMALES CHANDRA SEN, M.A., B.L., intends to enroll himself as an Advocate, Calcutta High Court

(1498—4—1508)

MR. MONINDRA CHANDRA NIYOGY intends to be enrolled as an Advocate of the Calcutta High Court.

(1502—4—1512)

MR. RAMKRISHNA PAL, B.L., intends to be enrolled as an Advocate of the Calcutta High Court.

(1509—4—1509)

MR. KASHI NATH MITTER intends to practise as an Advocate in the High Court, Calcutta.

(1510—4—1510)

MR. SAMBHU NATH BANERJEE, M.A., B.L., wants to be enrolled as an Advocate of the Calcutta High Court.

(1511—4—1531)

APPLICATIONS are invited for the post of Confidential Clerk and Stenographer under the District Magistrate of Faridpur on a scale of pay of Rs. 80—4—140—5—160 per mensem. Candidates must be capable of taking down shorthand notes from dictation at the rate of 120 words a minute. Preference will be given to graduates who have passed the final examination in shorthand from the Government Commercial Institute, Calcutta, and who have office experience. Applications with testimonials will be received by the undersigned up to the 31st July 1931. Selected candidates may be called for an interview.

A. C. DATTA, District Magistrate.

Faridpur, the 3rd July 1931.

APPLICATIONS are invited for the post of Superintendent, Reformatory and Industrial Schools, Alipore. The necessary qualifications for the post are—

"Broad education with clearly established interest in social work. Special knowledge either in workshop training or teaching with special qualifications in vocational work."

Candidates should be acquainted with the Literature of juvenile delinquency and abnormal mentality, must be of the highest personal character and be in sympathy with this type of boy.

The scale of pay sanctioned for the post is Rs. 250—250—300—40-2—500—50-2—800 with efficiency bars at Rs. 460 and Rs. 650.

Applications should be submitted in quadruplicate with necessary testimonials to the Director of Public Instruction, Bengal, Writers' Buildings, Calcutta, before 31st July 1931.

WANTED a temporary Professor of Philosophy for the Bethune College, Calcutta, in the Women's Branch of the Bengal Educational Service in the scale of Rs. 200—200—25-2—325 (efficiency bar)—25-2—500.

2. Candidates, who should be British subjects, should hold a first or second class M. A. degree in Philosophy of an Indian University, or a good Honours degree of a European University and should have satisfactory evidence of teaching experience.

3. Applications with documentary evidence of the qualifications possessed will be received up to the 20th August 1931 by the Principal, Bethune College, Calcutta.

WANTED a head master for a Government High School in Bengal in the Men's Branch of the Bengal Educational Service.

2. Candidates, who should be British subjects and not over 45 years of age, must possess a first class degree as M. A. or M. Sc. of an Indian University, or Honours degree (or corresponding qualification) of a European or American University. They must also possess a degree in teaching of an Indian University or a diploma or degree in teaching of a European or American University.

3. Candidates must produce evidence of an outstanding capacity for developing the corporate life of a school, of power of maintaining discipline, of capacity for control, and of a satisfactory record of teaching experience.

4. Canvassing will be regarded as a disqualification.

5. Applications with documentary evidence of the qualifications possessed will be received up to 30th August 1931 by the Assistant Director of Public Instruction, Bengal, Writers' Buildings, Calcutta.

WANTED a Professor of English for the Bethune College, Calcutta, in the Women's branch of the Bengal Educational Service.

Candidates should be British subjects and either be First or Second Class M. A. of an Indian University or should hold a good Honours degree of a European University and should have satisfactory teaching experience.

Applications supported by documentary evidence of the qualifications possessed will be received up to the 15th August 1931 by the Principal, Bethune College, Calcutta.

THE Bengal and Madras Service Family Pension Fund which is provisionally managed and assisted by Government has for its object the provision of monthly pensions for the maintenance of the widows and children of subscribers and is open, with certain exceptions, to all active and pensioned members of the Uncovenanted service of Government (except those serving under the Government of Bombay), and to Local Fund servants earning pensions from Government. Some of the special features of the fund are—(1) that widowed daughters incapable of remarriage or children labouring under such mental or bodily infirmities as incapacitate them from earning their livelihood or preclude the possibility of marriage (in caseof a daughter) are admitted to its benefits; and (2) that subscribers to the Widows' and Daughters' branches are entitled to a refund of 30 per cent. of the premia paid, should the nominee predecease them after five years of admission. The second quinquennial valuation of the Fund has been completed by the actuary to the Government of India, and his report discloses very favourable results. For forms of application and rules of the Fund apply to the Accountant-General, Bengal, Imperial Secretariat Buildings, Calcutta.

WHEREAS under sections 7 and 35 of the Wards' Act IX (B.C.) of 1879, as amended up to date, the Court of Wards has assumed charge of the private properties of Babu Satyendra Chandra Chaudhuri, proprietor of the Golokpur Ward's Estate.

Notice is hereby given under section 10A of the said Act that all creditors having claims against the said proprietor or his private immovable property are hereby required to submit the same in writing to the Collector of Mymensingh at his office at Mymensingh within six months from the date of publication of this notice.

Creditors are also hereby warned that claims not submitted as required by this notice are liable to be deemed to have been duly discharged/ceased to carry interest.

H. GRAHAM, Collector of Mymensingh.

Mymensingh, the 17th June 1931. (1405—3)

Notice to Creditors.

Estate Colonel John Edward Broadbent, deceased.

PURSUANT to section 360 of Act XXXIX of 1925 and section 42 of Act XXVIII of 1866, the creditors and all persons interested in the estate of Colonel John Edward Broadbent, late of Fynesbury, Southcote Road, Reading, Berks, England, who died at that address on or about the 7th day of January 1931, and Letters of Administration, with copy Will annexed, to whose estate were, on the 29th day of June 1931, granted by the High Court, Calcutta, with effect within the Province of Bengal, to Douglas Horsford Wilmer, of Standard Buildings, 32, Dalhousie Square, South, Calcutta, are hereby required to submit particulars of their claims, with supporting vouchers, to the undersigned on or before the 24th day of August 1931, after which date the Administrator will proceed to distribute the assets of the estate, having regard only to the claims of which notice shall then have been received. All persons indebted to the estate are requested to make payment of their respective debts without delay.

ORR, DIGNAM & Co.,

Solicitors to the Administrator abovenamed.

32, Dalhousie Square, South, Calcutta, 10th July 1931.

(1465—1—1511)

The Commissioners for the Port of Calcutta.

NOTIFICATION No. 93.

IT is hereby notified for general information under the provisions of section 107 of the Calcutta Port Act III (B. C.) of 1890, and with the approval of Government, that as on and after the 14th July 1931 the Commissioners will not, until further notice, supply labour or cranes for night work at the Calcutta Jetties, the charge of Rs. 2-8 per crane or derrick per hour now payable by any vessel working at the Calcutta Jetties between the hours of 6 p. m. of one day and 6 a. m. on the following day will be reduced to 4 as. per derrick per hour.

By order of the Commissioners,

C. W. T. HOOK, Secretary (offg.).

Calcutta, the 14th July 1931. (1508—1)

NOTICE is hereby given that Mr. Bhuramal Agrawal, of No. 19, Tarachand Dutt Street, Calcutta, who was lately under Articles of Clerkship to Mr. Sanat Kumar Chatterji, Advocate, intends to apply to be admitted as an Advocate of the High Court of Judicature at Fort William in Bengal.

Dated this 17th day of July 1931.

(1535—4—1535)

Currency Note.

A PORTION of the following Currency note of the Calcutta Circle of issue is stated to have been destroyed and payment of its value has been claimed by the person whose name is shown against the number.

Any other person claiming a right to it is warned to communicate at once with the undersigned :—

Regtd. No.	Note No.	Value.	Name and address of the claimant.
		Rs.	
W.D. 6 of 31-32.	S/64, 154930	100	Kanai Laul Ghosh, 5, Chatterji Lane, Bowbazar, Calcutta.

B. C. DUTT, Currency Officer.

Currency Office, Calcutta, the 3rd July 1931.

Currency Notes.

PORTIONS of the following Notes of the Calcutta Circle of issue are stated to have been destroyed and payment of their value has been claimed by the person whose name is shown against the numbers.

Any other person claiming a right to them is warned to communicate at once with the undersigned.

Registered No.	Note No.	Value.	Name and address of the claimant.
		Rs.	
WD. 7 of 31-32.	S-44,463698	100	Sadhu Charan Dey, 8, Shibu Thakur Lane, Barrabazar, Calcutta.
	S-44,730754	100	
	S-44,730755	100	
	S-44,833625	100	
	S-41,805014	100	
	S-52,294760	100	

B. C. DUTT, Currency Officer.

Currency Office, Calcutta, the 3rd June 1931.

Currency Note.

A PORTION of the following Currency note of the Calcutta circle of issue is stated to have been destroyed and payment of its value has been claimed by the person whose name is shown against the number.

Any other person claiming a right to it is warned to communicate at once with the undersigned—

Regd. No.	Note No.	Value.	Name and address of the claimant.
		Rs.	
WD 8 of 31-32.	S/36,914033	100	Suresh Chandra Dass, of Messrs. Dass & Co., Janiganj Bazar, Silchar P. O.

B. C. DUTT, Currency Officer.

Currency Office, Calcutta, the 10th July 1931.

Currency Notes.

PORTIONS of the following Currency Notes of the Calcutta Circle of issue are stated to have been destroyed and payment of their value has been claimed by the person whose name is shown against the numbers.

Any other person claiming a right to them is warned to communicate at once with the undersigned :—

Regd. No.	Note No.	Value.	Name and address of the claimant.
		Rs.	
WD. 9 of 31-32.	S/29, 959428	100	Krishna Hari Barman, Gobnahati, Shitakuchi post-office Cooch Behar.
	S/19, 598674	100	

B. C. DUTT, Currency Officer.

Currency Office, Calcutta, the 10th July 1931.

Lost.

THE Government Promissory Note No. 310127 of the 3½ per cent. loan of 1865 for Rs. 3,000, originally standing in the name of Kedar Nath Das (now deceased), the proprietor, by whom it was never endorsed to any other person, having been lost, notice is hereby given that payment of the above note and the interest thereupon have been stopped at the Public Debt Office, Imperial Bank of India, Calcutta, and that application is about to be made for the issue of duplicate in favour of Tulsicharan Das and Sambhucharan Das, certificate holders to the estate of the abovenamed deceased. The public are cautioned against purchasing or otherwise dealing with the abovementioned security.

Name of the advertiser—Tulshicharan Das and Sambhucharan Das.

Address—241, Grand Trunk Road, Sibpur, Howrah.

(1270—3—1383)

Lost.

THE Calcutta Municipal Debenture Nos. 1068, 1081, 1086 of the 4 per cent. loan of 1901-02 for Rs. 5,000, originally standing in the name of Prosad Das Boral & Bros., and last endorsed to Rai Bahadur Ram Taran Banerjee, the proprietor, by whom they were never endorsed to any other person, having been lost, notice is hereby given that payment of the above debenture and the interest thereupon have been stopped at the Public Debt Office, Imperial Bank of India, Calcutta, and that application is about to be made for the issue of duplicates in favour of the proprietor. The public are cautioned against purchasing or otherwise dealing with the abovementioned debentures.

Name of the advertiser—Ram Taran Banerjee.

Residence—16, Hazra Road, p. o. Kalighat, Calcutta.

(1442—3—1469)

Stolen.

THE Government Promissory Note No. F001912 of the 6 per cent. Bonds, 1930, for Rs. 500, originally standing in the name of the Accountant-General, Posts and Telegraphs, and last endorsed to Basanta Kumari Dasi (now deceased), the proprietress, by whom it was never endorsed to any other person, having been stolen, notice is hereby given that payment of the above note and the interest thereupon have been stopped at the Public Debt Office, Imperial Bank of India, Calcutta, and that application is about to be made for the issue of duplicate in favour of Nikhilesh Chandra Das, minor, under the guardianship of Pramatha Nath Das. The public are cautioned against purchasing or otherwise dealing with the abovementioned security.

Name of the Advertiser—Pramatha Nath Das.

Residence—Panchakote Raj post-office (Manbhum).

(1344—3—1384)

In the matter of the Indian Companies Act, 1913, and

In the matter of the Karatipara Mozumdar Estate, Ltd.

BY an order made by the High Court of Judicature at Fort William in Bengal in the above matters and dated the 1st day of June 1931 on the petition of Srimati Krishna Promada Dassi of No. 87/88, Kansaripara Road in Bhowanipur in the suburbs of the town of Calcutta, it was ordered that the said Company be wound up by this Court under the provisions of the Indian Companies Act, 1913, and that Mr. S. N. Mukherjee the provisional liquidator should continue to act as such liquidator of the said Company.

G. C. CHUNDER & Co.,
Attorneys for the petitioner.

6, Old Post Office Street, Calcutta, the 14th July 1931.

(1499—1—1505)

IN THE HIGH COURT OF JUDICATURE AT FORT WILLIAM IN BENGAL.

ORDINARY ORIGINAL CIVIL JURISDICTION.

In the matter of the Indian Companies Act, VII of 1913, and

In the matter of the Eastern Tavoy Minerals Corporation, Limited.

NOTICE is hereby given that a petition for the winding up of the abovenamed Corporation by the High Court of Judicature at Fort William in Bengal was on the 13th day of July 1931 presented to the said Court by Probhat Chandra Ghosh of 23, Beniapukor Lane, Calcutta, who is a contributory of the said Eastern Tavoy Minerals Corporation, Limited; and that the said petition is directed to be heard before the Court on the 17th day of August 1931; and any creditor or contributory of the said Eastern Tavoy Minerals Corporation, Limited, desirous of opposing an order for the winding up of the said Corporation under the above Act should appear at the time of hearing by himself or his attorney or advocate for that purpose; and a copy of the petition will be furnished to any creditor or contributory of the said Corporation requiring the same by the undersigned on payment of the prescribed charge for the same.

CLARKE, RAWLINS, KER & Co.,
Attorneys for the petitioner.

6, Old Post Office Street, Calcutta, the 14th July 1931.

NOTE.—Rule 41 provides that any person who intends to appear on the hearing of the said petition must serve on or send by post to the abovenamed notice in writing of his intention so to do. The notice must state the name and address of the person, or if a firm, the name and address of the firm, and must be signed by the person or firm, or his or their attorney (if any), and must be served, or if posted, must be sent by post in sufficient time to reach the abovenamed not later than two clear days before the 17th day of August 1931.

(1494—1—1490)

In the matter of the Indian Companies Act, 1913, and

In the matter of Prudential Bank (India), Limited (in liquidation).

NOTICE is hereby given that, at an extraordinary general meeting of the Company held on 30th June and continued on the 1st July last, the following resolution was passed :—

That it has been proved to the entire satisfaction of the meeting that the Company, by reason of its liabilities, is unable to carry on business and that it is advisable to wind up the same and that accordingly the Company be wound up and Mr. N. C. Sen, proprietor, Sakha Press, 34, Mussalmanpara Lane, be appointed voluntary liquidator for the purpose of such winding up.

H. N. BOSE, Chairman.

(1479—1—1486)

In the matter of the Indian Companies Act, VII of 1913, and

In the matter of the Bijou, Limited (in liquidation).

NOTICE is hereby given, pursuant to section 217 of the Indian Companies Act, VII of 1913, that a general meeting of the members of the abovenamed Company will be held on Friday, the 21st day of August 1931, at 3 p.m., at 22, Strand Road, Calcutta, in order that there may be laid before the said Company an account showing the manner in which the winding up has been conducted and the property of the Company disposed of, and to pass an extraordinary resolution as to the disposal of the books, accounts and documents of the Company and in order that the said Company may hear any explanation that may be given by the liquidator.

A. C. WILD, Liquidator.

Calcutta, the 13th July 1931.

(1489—1—1503)

In the matter of the Indian Companies Act, 1913 (VII of 1913), and

In the matter of The Calcutta Model Works, Limited.

NOTICE is hereby given that, on the expiration of three months from date, the name of The Calcutta Model Works, Limited, will, unless cause is shown to the contrary, be struck off the Register, and the Company will be dissolved.

F. C. GREENWAY, Registrar of Companies
under Act VII of 1913.

Calcutta, the 13th July 1931.

In the matter of the Indian Companies Act, 1913 (VII of 1913), and

In the matter of The Calcutta Milk Association, Limited.

NOTICE is hereby given that, on the expiration of three months from date, the name of The Calcutta Milk Association, Limited, will, unless cause is shown to the contrary, be struck off the Register, and the Company will be dissolved.

F. C. GREENWAY, Registrar of Companies
under Act VII of 1913.

Calcutta, the 13th July 1931.

In the matter of the Indian Companies Act, 1913 (VII of 1913), and

In the matter of Stuartganj Loan Company, Limited.

NOTICE is hereby given that, on the expiration of three months from date, the name of Stuartganj Loan Company, Limited, will, unless cause is shown to the contrary, be struck off the Register, and the Company will be dissolved.

F. C. GREENWAY, Registrar of Companies
under Act VII of 1913.

Calcutta, the 13th July 1931.

Imperial Library.

(Secretariat Buildings, 6, Esplanade East, Calcutta.)
Open on—

Weekdays and Saturdays from 10 A.M. to 7 P.M.
Sundays and Gazetted holidays from 2 P.M. to 5 P.M.

THE Imperial Library is also a Lending Library. It is free to all except children. There is no subscription to pay.

K. M. ASADULLAH, Librarian.

Descriptive Catalogue of Sanskrit Manuscripts.

PARTS I, II and III of a Descriptive Catalogue of the Sanskrit Manuscripts in the Library of the Calcutta Sanskrit College, prepared by Pandit Hrishikesh Sastri and Babu Siva Chandra Gui, M.A., B.L., of that College, are offered to the public for sale. The Catalogue having to be completed in 23 parts the price of each part is 12 annas a copy exclusive of postage. Copies can be obtained from the Principal of the Sanskrit College, Calcutta.

CINCHONA FACTORY PRODUCTS.

By order of the Government of Bengal Cinchona Factory Products as manufactured and packed at the Cinchona Factory, Mungpoo, Darjeeling district, will be sold and distributed by the **Superintendent, Presidency Jail,** *in original packages* as received from the Mungpoo Factory at the rates noted below **from the 1st May 1926 :—**

Quinine Sulphate.

For 60 lbs. and upwards at a time	..	Rs. 18 per lb.
For 6 lbs. and over but less than 60 lbs. at a time	..	„ 19 „
For any quantity less than 6 lbs.	..	„ 20 „

Quinine Hydrochloride.

For 60 lbs. and upwards at a time	..	Rs. 23 per lb.
For 6 lbs. and over but less than 60 lbs. at a time	..	„ 24 „
For any quantity less than 6 lbs.	..	„ 25 „

Quinine Di-Hydrochlor.

For 60 lbs. and upwards at a time	..	Rs. 25 per lb.
For 6 lbs. and over but less than 60 lbs. at a time	..	„ 26 „
For any quantity less than 6 lbs.	..	„ 27 „

Quinidine Sulphate.

For 60 lbs. and upwards at a time	..	Rs. 20 per lb.
For 6 lbs. and over but less than 60 lbs. at a time	..	„ 21 „
For any quantity less than 6 lbs.	..	„ 22 „

Cinchonidine Sulphate.

For 60 lbs. and upwards at a time	..	Rs. 25 per lb.
For 6 lbs. and over but less than 60 lbs. at a time	..	„ 26 „
For any quantity less than 6 lbs	..	„ 27 „

Cinchonine Sulphate.

For 60 lbs. and upwards at a time	..	Rs. 12 per lb.
For 6 lbs. and over but less than 60 lbs. at a time	..	„ 13 „
For any quantity less than 6 lbs.	..	„ 14 „

Cinchona Febrifuge (Powder).

For 6 lbs. and over at a time	..	Rs. 9 per lb
For any quantity less than 6 lbs.	..	„ 10 „

Cinchona Febrifuge (Tablets).

For 6 lbs. and over at a time	..	Rs. 10 per lb.
For any quantity less than 6 lbs.	..	„ 11 „

Quinoidine (Tablets).

For 6 lbs. and over at a time	..	Rs. 5 per lb.
For any quantity less than 6 lbs.	..	„ 6 „

Quinoidine (in Mass).

For 6 lbs. and over at a time	..	Rs. 4 per lb.
For any quantity less than 6 lbs.	..	„ 5 „

Cinchona Bark (in 50 pound original bags).

Per bag	.. ..	.. Rs 25.

Transit charges extra in every case.

Quinine Sulphate is for sale to Government Institutions and Missionaries only. It is not for sale to Private Firms or the General Public.

Cinchona Febrifuge in Powder and Tablet form (when in stock) is for sale to Government Institutions, Missionaries and the General Public.

Quinine Sulphate will be supplied to Hospitals and Dispensaries of this Presidency only at the wholesale rate of Rs. 18 per lb., irrespective of quantities. For all other purchasers the rates given above will apply.

Provinces other than Bengal, Bihar and Orissa and Assam will get their supplies of Sulph. Quinine from the Director, Botanical Survey of India, Sibpur, Howrah.

Local sale at the jail gate from 2 to 4 p.m.

The system of payment is by—*Cash in advance*—by "*Treasury Chalans*," which should accompany the order or indent.

In cases where this is not possible, payment should be made by "*Remittance Transfer Receipts*" or crossed "*Cheques.*"

Indents unaccompanied by cash in advance will be sent Value Payable Post. Credit sale is not allowed except under special circumstances.

In the case of *Government officers* payment will be recovered by *Book Transfer, i.e., Countersigned Invoices* in the event of *Cash* not accompanying the indent by "*Treasury Chalans,*" *Remittance Transfer Receipts* or *Cheque.*

2. Price and postage must accompany the price of the drug (when the drug is required by post).

3. The name of the Railway and Steamer Station or Post Office must be written distinctly when the parcels are required by Rail, Steamer or Post. *Railway parcels are sent by passenger train only.*

4. A scale of postage is given below :—

For ¼ lb. 4 annas, ½ lb. 5 annas, 1 lb. 8 annas, 1½ lbs. 11 annas, 2 lbs. 14 annas, 2½ lbs. Re. 1-1, 3 lbs. Re. 1-1, 3½ lbs. Re. 1-4, 4 lbs. Re. 1-7, 5 lbs. Re. 1-13, 5½ lbs. Re. 1-13, 6 lbs. Rs. 2.

Two different drugs are not packed in the same parcel and postage must be paid separately for each kind.

N.B.—Postage stamps are not accepted as revenue.

Government reserve the right to alter the price without notice.

Registered No. C207 *No. 30 of 1931*

The Calcutta Gazette

THURSDAY, JULY 23, 1931.

CONTENTS:

	PAGE.		PAGE.
Statement under the Cotton Ginning and Pressing Factories Act, 1925 ..	953	Weather and Crop Report for the week ending 15th July 1931	973—976
Daily rainfall recorded in Bengal for the month of June 1931	954—969	Statement showing the daily gauge-readings of certain rivers for the week ending 9th July 1931	977—983
Vital Statistics for the towns of Bengal for the week ending 11th July 1931 ..	970	Statements of weekly gauge readings of certain rivers in Bengal	984—985
Abstract statement showing traffic and tollage on Canals in Bengal classed as Major and Minor Works and Navigation for the month of April 1931 ..	971	Resolution on the Annual Report of the Bengal Smoke Nuisances Commission for the year 1930	986
Monthly Weather and Crop Report of Bengal for June 1931	972	Resolution on the Report on the Police Administration in the town of Calcutta and its suburbs for the year 1930 ..	987—989

Supplement.

Official Papers.

FORM C—BENGAL.

STATEMENT OF COTTON PRESSED IN THE BENGAL PRESIDENCY FOR THE WEEK ENDING 10th JULY 1931.

[Section 5 (2) of the Cotton Ginning and Pressing Factories Act, 1925.]

Name of Division or block.	Number of bales pressed.				District included in the block.
	During the week.	During the corresponding week, last year.	Since 1st September 1930 (the date prescribed by the Local Government as the commencement of the season).	During the corresponding period, last year.	
The Bengal Presidency	1,061 or 1,055·4 bales of 400 lbs. each.	667	30,811	30,372	All districts in the Presidency.

J. B. McBRIDE,
Chief Inspector of Factories, Bengal (offg.).

DAILY RAINFALL RECORDED IN BENGAL

NOTE.—The total and the average rainfall for all districts have been

Division and district.	Station.	1	2	3	4	5	6	7
PRESIDENCY.								
24-Parganas ..	Saugor Island (Observatory) ..	..	..	..	..	..	..	..
	Diamond Harbour ..	..	..	..	..	..	..	..
	Budge-Budge	..	..	..	..	..	..	..
	Canning Town	..	..	..	..	..	..	..
	Alipore (Observatory) ..	..	..	..	..	..	..	..
	Barrackpore	..	..	..	..	..	..	..
	Dum-Dum	..	..	..	..	..	..	..
	Baraset	0·90	..	..	..	..	..	..
	Basirhat	..	..	..	..	..	..	..
	Gosaba*							
Nadia ..	Ranaghat	..	..	..	..	..	..	..
	Krishnagar (Observatory) ..	..	..	..	..	..	..	1·69
	Chuadanga	..	..	..	..	..	..	..
	Meherpore	..	..	..	..	..	0·13	..
	Kushtia	..	..	..	..	..	..	..
	Haringhata . ..	..	..	..	..	..	..	..
Murshidabad ..	Kandi	..	..	..	..	..	..	0·27
	Berhampore (Observatory) ..	..	..	..	..	..	..	0·61
	Lalbagh	..	..	..	..	..	0 55	..
	Azimganj	..	..	..	..	..	0·17	..
	Jangipur	..	..	..	..	..	..	0·05
	Lalgola	..	..	..	..	..	0·12	..
	Akriganj	..	..	..	..	..	0·08	..
	Patkabari	..	..	..	..	..	0·85	..
	Dumkal	..	..	..	..	..	..	0·49
	Kallyanganj (Ishanpur) ..	..	..	..	..	..	..	1·26
	Khargram	..	..	..	..	..	0·68	..
	Bharatpur	..	..	..	..	..	0·50	..
Jessore ..	Narail	..	..	..	..	..	..	..
	Jessore (Observatory) ..	..	..	..	..	..	..	..
	Jhenida	..	..	..	..	..	0·30	..
	Magura	..	..	..	..	..	..	..
	Bongaon	..	..	..	..	..	0·26	..
Khulna ..	Satkhira (Observatory) ..	..	..	..	..	..	..	..
	Bagerhat*							
	Khulna (Observatory) ..	..	..	..	..	..	..	..
	Kaliganj	..	..	..	..	..	..	..
	Nakipur	..	..	..	..	..	..	..
	Dumuria	..	..	..	..	..	..	..
	Rampal	..	..	..	..	..	..	..
	Kalaroa	..	..	..	..	..	..	..
	Paikgachha (Raruli) ..	..	..	..	..	..	..	..
	Mollahat	..	..	..	.	..	..	..
	Morelganj	..	..	..	..	..	..	..
	Ismailkati	.	..	..	..	..	..	..
BURDWAN.								
Burdwan ..	Kalna	..	..	..	..	..	..	..
	Burdwan (Observatory) ..	..	..	..	..	..	..	..
	Katwa	..	..	..	..	..	..	..
	Asansol (Observatory) ..	..	..	..	..	..	..	..
	Mankar	..	..	..	..	..	..	..
	Mangalkot*							
	Royna*							
	Monteswar*							
Birbhum ..	Suri	..	..	..	..	..	..	..
	Hetampur	..	..	..	..	..	..	..
	Rampurhat	..	..	..	..	..	0·14	..
	Bolpur	..	..	..	..	..	..	..
	Murarai	..	..	..	..	..	1·15	..
	Labpur	..	..	..	..	..	..	.

* Not reported.

FOR THE MONTH OF JUNE 1931.

calculated, using the data of only those stations for which normals are available.

8	9	10	11	12	13	14	15	16	17	18	19	20
..	..	..	0·50	0·04	..	..	0·12	5·95	0·21	..	1·39	0·02
..	..	..	..	0·31	..	1·15	..	2·53	0·12	..	..	..
..	..	..	..	..	..	0·40	1·19	2·97	0·49	..	0·41	..
..	..	..	..	..	..	0·50	0·17	0·60	1·05	..	..	..
..	..	..	..	..	..	0·52	0·67	1·34	1·18	..	..	..
..	..	..	..	..	..	1·22	1·80	0·94	0·47	..	0·49	0·52
..	..	..	..	..	1·32	1·52	2·02	0·62	..	..	..	0·49
..	..	..	..	..	0·43	0·80	..	1·50	..	..	..	0·80
..	..	..	..	..	..	0·36	1·04	1·54	..	..	1·50	..
..	..	..	..	..	0·27	..	0·20	1·40	0·25	..	..	.
..	..	..	..	..	..	0·48	0·42	0·22	0·62	..	..	..
..	..	..	..	..	0·65	1·64	0·03	0·17	0·57	..	..	
..	..	..	..	0·70	0·85	0·24	0·40	1·10	..	..	..	0·46
..	0·15	..	..	0·24	0·35	0·65	2·90	0·40	..	..	..	0·22
..	..	..	..	1·26	1·94	0·85	1·11	0·28	..	2·65	0·17	.
..	..	..	0·05	..	0·08	0·12	1·74	0·24	0·19	..	0·79	..
..	..	0·40	..	..	0·14	0·22	0·50	0·21	0·27	..	..	..
..	0·26	..	0·54	..	1·92	1·94	2·07	0·60	..	..	..	..
..	0·32	0·50	..	0·36	0·85	1·37	2·93	0·85	..	..	..	0·23
..	..	0·12	0·31	..	..	0·36	3·70	1·97	0·65	..	..	..
..	0·29	0·70	..	..	0·37	0·70	1·80	2·72	..	..	..	0·27
..	0·91	1·80	..	..	0·10	..	3·00	3·38	0·38	..	..	..
..	..	..	..	0·32	0·56	0·34	0·76	0·50	..	..	..	0·35
..	..	2·23	0·78	..	1·05	1·12	2·21	1·58	1·08	..	..	..
..	..	0·72	..	..	0·13	0·54	0·61	1·86	0·23	..	..	..
..	..	0·26	..	..	..	..	0·94	0·32	..	..	..	..
..	..	..	..	0·40	..	..	0·40	..	0·02	..	..	..
..	..	..	..	..	..	0·85	0·12	0·70	..	..	..	..
..	..	..	..	..	0·12	1·62	2·24	1·65	0·03	..	0·17	0·05
..	..	..	..	2·00	0·49	1·06	0·40	..	..	..	0·25	..
..	..	..	..	1·35	..	..	1·05	0·27	0·10	..	..	..
..	..	..	..	..	0·06	0·35	2·06	1·65	0·01	..	0·44	..
..	..	..	..	..	0·46	0·41	1·32	0·49	0·02	..	1·04	..
..	..	..	..	..	1·13	0·37	0·27	0·45	0·04	0·23	0·14	..
..	..	..	..	..	..	1·63	0·05	..	..	..	..	0·50
..	..	..	..	..	..	0·30	..	..	0·20	..	0·05	0·50
..	..	..	..	1·15	0·55	0·97	0·50	..	..	..	..	..
..	..	..	..	..	1·00	1·32	2·28	0·16	..	..	..	0·10
..	..	..	..	1·31	0·52	1·20	0·13	1·39	..	..	..	..
..	..	..	..	..	..	1·80	..	..	..	..	0·10	1·50
..	..	..	..	..	..	0·28	0·11	0·36	..	..	..	..
..	..	..	..	..	2·46	1·40	0·21	0·76	..	..	0·30	0·64
..	..	..	..	..	1·04	0·61	2·50	0·19	..	..	1·13	..
..	..	..	..	..	..	0·75	0·42	1·18	..	0·46	..	..
..	..	..	..	..	1·42	..	0·02	0·92	1·30	..	..	..
..	..	..	..	0·65	..	..	..	0·32	1·42	..	1·11	..
..	..	..	..	..	..	0·30	0·10	0·70	..	..	0·05	..
..	..	..	..	..	..	..	..	..	..	..	..	..
..	..	..	..	..	0·13	0·20	0·26	0·20	0·15	..	0·21	0·41
..	..	..	..	..	..	0·70	0·31	0·19	1·37	..	1·03	..
..	..	..	..	..	1·86	1·31	0·80	0·52	..	..	..	0 16
..	..	..	..	..	0·24	0·52	0·11	0·41	0·04	..	0·68	1·13
..	..	..	..	..	0·45	2·15	2·30	0·50	..	..	..	..
..	0·33	0·36	0·04	0·03	1·05	0.49	0·24	0·18	1·05	..	..	..
..	..	..	..	..								

DAILY RAINFALL RECORDED IN BENGAL

Division and district.	Station.	21	22	23	24	25	26	27
PRESIDENCY.								
24-Parganas ..	Saugor Island (Observatory) ..	0·24	1·33	1·77	0 04	0·02	0·16	..
	Diamond Harbour ..	2·06	0·97	0·32	..	2·43	0·44	0·04
	Budge-Budge	..	0·10	..	0·03	0·59	0·48	1·23
	Canning Town	0.42	0·45	..	..	0·66	0·85	1·08
	Alipore (Observatory) ..	0·77	0·08	0·01	0·15	0·34	0·16	0·76
	Barrackpore .. .	0·20	..	..	..	0·22	0·08	0·98
	Dum Dum	..	..	..	0·32	0·50	1·72	..
	Barasat	..	0·50	..	1·20	..	..	0·18
	Basirhat . ..	0·32	..	..	1·03	0·30	0·52	1·11
	Gosaba*							
Nadia	Ranaghat	1·30	0·50	..	..	..	..	2·75
	Krishnagar (Observatory) ..	0·79	0·35	..	..	0·18	0·50	2·40
	Chuadanga	0·28	..	..	0.10	0·03	1·12	2·76
	Meherpore	0·05	..	..	..	7·20	0·12	..
	Kushtia	..	0·80	..	..	4·92	1·40	..
	Haringhata	..	..	..	0·60	..	..	..
Murshidabad ..	Kandi	0·28	..	..	..	..	..	0·75
	Berhampore (Observatory) ..	0·52	0·15	0·29	0·18	..	1·89	..
	Lalbagh	..	..	0·25	0·34	1·01	0·12	0·84
	Azimganj	..	..	0·42	0·61	0·14	..	..
	Jangipur	0·86	0·09	0·24	1 46	..	1·95	0·04
	Lalgola	0·39	..	..	0·22	0·10	0·10	1·30
	Akriganj	0·38	..	..	0·17	0·18	..	1·78
	Patkabari	0·45	..	1·24	0·33	1·70	0·27	..
	Dunkal	0·21	0·06	..	..	1·05	1·21	..
	Kallyanganj (Ishanpur) ..	0·41	..	0·28	..	..	0·17	..
	Khargram	..	..	0·20	..	1·55	..	..
	Bharatpur . ..	0·06	..	..	..	0·05	..	..
Jessore	Narail	..	..	0·23	..	1·50	0·40	1·52
	Jessore (Observatory) ..	0·02	..	0·62	1·15	0·28	0·16	0·45
	Jhenida	0·04	..	0·65	0·20	0·28	..	..
	Magura	..	..	..	1·05	..	4·17	..
	Bongaon	0·20	0·25	0·14	0·05	0·26	0·20	1·53
Khulna ..	Satkhira (Observatory) ..	0·03	0·06	0·30	0·17	0·21	0·84	1·38
	Bagerhat*							
	Khulna (Observatory) ..	0·11	..	0·18	0·21	0·15	0·60	2·66
	Kaliganj	..	0·58	1·05	..	0·58	0·42	0·58
	Nakipur	..	..	..	..	..	2·60	..
	Dumuria	0·33	0·07	..	0·08	2·50	1·48	..
	Rampal	0·55	0·14	0·20	0·10	..	0·32	0·10
	Kalaroa	0·20	0·30	1·10	0·15	1·05	1·46	0·88
	Paikgachha (Raruli) ..	..	..	..	..	..	2·60	..
	Mollahat	0·19	..	..	..	..	0·25	..
	Morelganj	0·34	0·29	0·31	0·84	..	0·74	0·10
	Ismailkati	..	0·22	1·46	..	0·30	0·96	1·11
BURDWAN.								
Burdwan ..	Kalna	0·82	0·31	..	..	0·72	0·36	..
	Burdwan (Observatory) ..	0·40	0·10	0·61	0·04	..	0·55	0·50
	Katwa	0·92	1·20	..	0·26	0·87	2·30	0·26
	Asansol (Observatory) ..	0·57	0·13	..	..	..	0·05	0·22
	Mankar	0·39	0·14	0·10	..	..	..	0·49
	Mangalkot*							
	Royna*							
	Monteswar*							
Birbhum ..	Suri	0·88	0·21	0·24	..	..	2·36	0·21
	Hetampur	..	..	..	..	..	1 22	..
	Rampurhat	..	0 20	..	..	0·24	0·13	0·24
	Bolpur	..	0·20	..	..	0·12	0·60	..
	Murarai	..	..	..	1·20	1·40	1·10	..
	Labpur	0·72	0·10	0·14	0·22	0·12	1·20	0·04

* Not reported.

FOR THE MONTH OF JUNE 1931.

28	29	30	31	Number of rainy days.	Average number of rainy days.	Total rainfall for the month.	Normal rainfall for the month.	Heaviest rainfall during the month.	Total rainfall from 1st to 30th June 1931.	Normal rainfall from 1st to 30th June 1931.
0·02	0 18	0·02		10	12·3	12·01	11·54	5·95	12·01	11·54
..	..	..		9	12·1	10 37	11·68	2 53	10·37	11·68
..	..	..		9	14·2	7 89	12·79	2·97	7·89	12·79
..	..	..		9	13·3	5 78	11·87	1·08	5·78	11·87
0·04	..	..		9	13·3	5·99	11 90	1·34	5·99	11·90
..	..	..		9	12·0	6·92	10·42	1·80	6·92	10·42
..	..	1 06		9	12·4	9·57	11·38	2·02	9 57	11·38
0·52	0·48	..		10	12·6	7 31	10·53	1·50	7·31	10·53
..	0·26	..		10	13·0	7·98	12·01	1·51	7·98	12·01
					(*)		(*)			(*)
1·00	..	..		8	12·7	7·67	10 03	2·75	7·67	10·03
..	..	..		10	13·0	7·65	10 66	2 40	7·65	10·66
..	..	..		9	13·2	7·95	10·59	2·76	7 95	10·59
..	0 02	..		9	13·0	11·27	10 30	7.20	11·27	10·30
..	..	..		10	13·7	12 03	10 85	4 92	12·03	10·85
..	..	0·10		9	10·3	8·96	7 27	2·65	8·96	7·27
..	..	..		9	12·8	5·11	10·51	0 79	5.11	10·51
..	..	..		12	12·3	5·38	10·04	1·80	5 38	10·04
..	..	..		12	12·1	9·44	10·51	2 07	9 44	10·51
..	..	0·34		13	12·2	9 09	10·31	2 93	9·09	10·31
0 32	..	..		11	12·1	12 12	10·35	3·70	12.12	10·36
..	..	..		13	12 0	8·99	10·06	2·72	8·99	10·06
..	..	..		10	12·5	12·16	11·35	3·38	12·16	11·35
..	..	..		12	10·9	7·67	9·55	1·70	7·67	9·55
..	..	..		11	12·1	13·07	10·57	2.23	13 07	10·57
..	..	..		10	12·9	6·21	11 98	1·86	6·21	11·98
..	..	..		6	(*)	3·95	(*)	1 55	3·95	(*)
..	..	..		3	(*)	1·45	(*)	0·50	1 45	(*)
..	..	..		7	14·3	5·32	12 04	1·52	..	12·04
..	0·31	..		11	14·3	8·87	12 67	2·24	..	12·67
..	0·10	..		10	14·3	5·77	12·51	2·00	..	12·51
1·30	1·07	..		8	14·0	10·36	11·48	4·17	..	11·48
..	..	..		11	13·3	7·49	10·81	2·06	..	10·81
..	0·55	0·03		11	14·0	7·31	12·40	1 38	7·31	12·40
					15·7		14·14			14·14
..	0·03	..		12	15·4	6·57	12·73	2·06	6·57	12·73
..	..	0·05		8	13·7	6·04	14·62	1·63	6 04	14 62
..	..	..		4	13·0	3·65	13·31	2·60	3·65	13·31
..	..	0·96		8	14·4	8·59	13 08	2·50	8·59	13·08
0·40	0 49	..		13	14·4	7·16	12·60	2·28	7·16	12·60
..	0·39	..		13	14·3	10·08	11·47	1 46	10·08	11·47
..	..	..		4	14·0	6·00	12·71	2·60	6·00	12·71
..	..	..		5	14·5	1·19	14·49	0·36	1·19	14·49
..	..	0·08		12	16·1	8·47	15·81	2 46	8·47	15·81
..	1·41	..		11	13·1	10·93	11·95	2·50	10·93	11·95
..	..	..		8	12·2	5 02	10·32	1·18	5 02	10·32
..	..	..		8	12·8	5 86	10·24	1·42	5·86	10·24
..	..	..		10	12·0	9.31	10·02	2·30	9.31	10·02
..	..	..		7	12·6	2·67	9·93	0·70	2·67	9·93
0·55	..	..		5	10·9	1·64	9·60	0·52	1·64	9·60
0·52	..	..			14·0		12·86			12·86
					13·7		10·86			10·86
					13·6		12·61			12·61
0·78	..	..		13	12·2	6.24	10·73	2·36	6·24	10·73
..	..	..		6	12·7	4·82	10·35	1·37	4·82	10·35
..	..	..		10	11·8	5·60	10·57	1 86	5·60	10·57
..	..	..		9	11·5	4·05	9·43	1·13	4·05	9·43
..	..	..		10	12·5	11 01	12·23	2·30	11·01	12·23
..	..	..		11	12·6	5·64	10·49	1·29	5·64	10·49

(*) Not ascertained.

DAILY RAINFALL RECORDED IN BENGAL

Division and district.	Station.	1	2	3	4	5	6	7
BURDWAN—*concld.*								
Bankura ..	Bankura (Observatory) ..	..	..	..	..	..	..	..
	Vishnupur	..	..	..	..	..	..	..
	Maliara	..	..	..	..	..	..	..
	Khatra	..	..	..	..	..	..	..
	Indas	..	..	..	..	..	..	..
	Kotalpur	..	..	..	..	..	..	..
	Onda*							
	Gangajalghati	..	..	..	..	..	..	..
	Raipur	..	..	..	..	..	..	..
	Sonamukhi	..	..	..	..	..	..	..
	Taldangra	..	..	..	..	..	..	..
	Saranga	..	..	..	..	..	..	..
	Indpur	..	..	..	..	..	..	..
	Arhara	..	..	..	..	..	..	..
	Barjora	..	..	..	..	..	..	..
	Simlapal	..	..	..	..	..	..	..
	Mejia	..	..	..	..	..	..	..
	Siromanipur	..	..	..	..	..	..	..
	Palasdanga*							
	Chatna	..	..	..	..	..	..	..
	Ranibandh	..	..	..	..	..	..	..
	Saltora	..	..	..	..	..	..	..
	Joypur	..	..	..	..	..	..	..
	Ambikanagar*							
	Joyrampur	..	..	..	..	..	..	..
Midnapore ..	Contai	..	..	..	..	..	..	..
	Tamluk	..	..	..	..	..	..	..
	Midnapore (Observatory) ..	..	..	..	..	..	..	..
	Ghatal	..	..	..	..	..	..	..
	Kukrahati	..	..	..	..	..	..	..
	Amlagora	..	..	..	..	..	..	..
	Panskura	..	..	..	..	..	..	..
	Dantan	..	..	..	..	..	..	..
	Chandrakona*							
	Pachet*							
	Bhagwanpur	..	0·37	..	..	..	..	..
	Kashiary*							
	Nayabasan	..	..	..	..	..	..	..
	Silda (Belpahari)	..	..	..	..	..	..	..
	Kharagpur	..	..	..	..	..	..	..
	Goaltore	..	..	..	..	..	..	..
	Salboni	..	..	..	..	..	..	..
	Narayangarh	..	..	..	..	..	..	..
	Ramnagar	..	..	..	..	..	..	..
	Mohanpur	..	..	..	..	..	..	..
	Jenka (Khajri)	..	..	..	..	..	..	..
	Nandigram	..	..	..	..	..	..	..
	Moyna	..	..	..	..	..	..	..
	Pingla	..	..	..	..	..	..	..
	Narajole	..	..	..	..	..	..	..
	Kolaghat (Dainun)* ..							
	Balichak	..	..	..	..	..	..	..
	Jhargram	..	..	..	..	..	..	..
Hooghly ..	Serampore	..	..	..	..	..	..	..
	Hooghly	..	..	..	..	..	..	..
	Arambagh	..	..	..	..	..	..	..
	Chanditala	..	..	..	..	..	..	..
	Tentulia	..	..	..	..	..	..	0·02
	Boinchee*							
	Khanakul	..	..	..	..	..	..	..
	Tarakeswar	..	..	..	..	..	..	..
Howrah ..	Howrah	..	..	..	..	..	..	..
	Maheseroka	..	..	..	..	..	..	..
	Uluberia	..	..	..	..	..	..	..
	Amta	..	..	..	..	..	..	..
RAJSHAHI.								
Boalia ..	Boalia (Observatory) ..	..	..	..	..	..	..	0·13
	Nator	..	..	..	..	..	..	..
	Naogaon	..	..	..	..	..	..	..
	Lalpur	..	..	..	..	..	..	..
	Manda	..	..	..	..	..	..	..
	Mahadebpur	..	..	..	..	..	..	..
	Tanor	..	..	..	..	..	..	..
	Chaugram*							
	Joari*							
	Badalgachi	..	..	..	..	..	..	..

* Not reported.

FOR THE MONTH OF JUNE 1931.

8	9	10	11	12	13	14	15	16	17	18	19	20
..	..	..	..	..	..	..	0·22	0 35	..	..	0·76	..
..	..	..	..	..	..	..	0·46	0 50	1·12	..	0·45	..
..	..	..	..	..	..	..	..	0·35	..	..	0·51	..
..	..	..	..	..	..	..	0 15	1·06	..	..	..	1·12
..	..	..	..	..	0·89	..	..	0·80	0·37	..	0·19	..
..	..	..	..	..	..	0·13	1·20	1 10	..	0·30	..	..
..	..	..	..	..	..	..	0·04	0·34	..	..	0·71	..
..	..	..	..	..	..	..	0·28	3·41	..	..	..	0·77
..	..	..	..	0·35	..	..	0 18	0·08	..	..	..	..
..	..	..	..	..	..	1·53	2·15	..	..	.	0·20	..
..	..	..	..	..	0·02	..	1·60	..	..	..	..	..
..	..	..	..	..	..	0·20	..	0 15	..	..	..	..
..	..	..	..	..	..	..	0·60	..	..	..	..	0 10
..	..	..	..	0·17	..	0·14	0·34	..	..	1·78	..	..
..	..	..	..	..	..	1·30	1·10	..	..	..	0·15	..
..	..	..	..	..	..	..	0·30	0·21	..	..	0·70	..
..	..	..	..	..	..	..	0·03	..	1·05	0·07	0·27	1·35
..	..	..	..	..	..	0·09	0·49	..	..	0·35	..	0·10
..	..	..	..	..	..	..	0·18	..	..	..	..	1·50
..	..	..	..	..	..	..	0·50	0·26	..	..	..	..
..	0·22	..	..	..	..	0·24	0·65	0·85	..	..	..	0·75
..	..	..	..	..	.	0 15	0 40	1·05	..	0·07	..	..
..	..	..	0·26	0·14	..	..	0·02	1·60	0·03	0·17	0·42	0·04
..	..	..	..	..	..	..	0·20	..	..	0·40	..	..
..	..	..	..	..	..	..	0·90	0 97	..	0·49	1·27	..
..	..	..	..	..	..	..	0.40	1·02	0·33	..	..	..
..	..	..	0·74	..	1·05	..	3·30	0·06	..	..	..	0·82
..	..	..	..	..	..	..	0 35	1 30	..	..	..	..
..	..	..	..	..	..	..	0·10	0·08	1·68	..	0·08	..
..	..	..	0·14	..	..	..	0·82	0·35	1·27	0 36	..	..
..	..	..	..	..	..	..	0·10	0·70	0·10	0·30	0·80	..
..	..	..	..	..	..	..	..	..	..	1·05	..	0·15
..	..	..	.	..	..	1 38	1·90	0 14	0·06	0·14	..	0 31
..	..	..	0·33	..	0·25	..	0·52	..	..	2·65	..	0·88
..	..	..	..	..	..	..	0·21	1 32	0·35	..	0·07	0·62
..	..	..	..	.	..	..	2·50	..	..	0·02	..	0·70
..	0·70	..	..	..	..	..	0·10	0·90	..	..	1·50	0 60
..	..	..	0·31	..	..	..	4.41	0·03	0·06	0·06	..	..
..	..	..	..	..	..	..	1·10	0·25	0·01	..	1 50	1·20
..	..	..	0·05	0·50	..	..	..	3 75	0·05	..	0 36	0 40
..	..	..	..	..	..	..	4·00	1·40	0 50	0 53	..	2·50
..	..	..	0·27	..	..	..	0·17	1·60	..	0·90	..	2·17
..	..	..	..	0·10	..	..	0·15	..	0·30	0·50	0·05	0·45
..	..	..	..	..	..	..	0·60	..	..	..	..	..
..	..	..	..	..	..	1·73	0·37	..	0·43	0·25	0·70	0·49
..	..	..	0·59	0·30	..	..	0·95	0·73	0·09	..	..	..
..	..	..	..	..	..	1·53	1·00	1·05	0·42	..	0 54	..
..	..	..	..	..	0·35	1·20	0·72	1·00	0·20	..	..	..
..	..	..	..	..	..	..	0 07	1 80	1·05	..	1·14	..
..	..	..	..	..	..	2·50	0·00	..	0 95	..	0·91	..
..	..	..	..	0·59	0·57	0·11	1·17	0·41	..	..	..	0·14
..	..	..	..	..	..	0·30	0·58	1·20	..	0·48	..	0·76
..	..	..	..	..	0·30	0·20	1·10	0·60	..	0·30	..	0·70
..	..	..	..	..	..	0·72	0·60	1·91	0·77	..	0·04	..
..	..	..	..	..	..	0.70	0·85	0·20	0·95	..	..	0·25
..	..	..	..	..	..	1·58	1·25	0·60	1·15	..	1·45	..
..	..	..	..	..	..	0·30	1·90	0·12	1·00	..	0·80	0·20
..	..	0·24	0·29	..	..	0·48	2·25	3·33	1·18	..	..	..
..	..	1·10	0·55	..	..	0·60	3 25	2·02	1·02	..	..	0·20
..	..	0·12	..	0·28	..	0·18	2·18	1 10	1·09	..	..	..
..	0·46	0·19	..	0·50	..	2·50	4·10	3·33	1·00	..	..	..
..	0.10	0·40	1·40	0·05	0·02	0·07	1·42	..	..	..	..	..
..	..	0·17	0·37	..	..	..	1·32	1·28	..	..	..	..
..	0·50	0·80	0·18	..	0·71	..	1·82	0·82	..	..	..	..
..	..	..	..	..	..	..	..	2·10	4·10	..	..	0·25

DAILY RAINFALL RECORDED IN BENGAL

Division and district.	Station.	21	22	23	24	25	26	27
BURDWAN—*concld.*								
Bankura ..	Bankura (Observatory) ..	1·03	..	..	0·11	0·67	0·16	0·15
	Vishnupur	0·67	0·03	0·14	..	0·03	1·53	1·22
	Mahara	0·31	0·20	..	..	0·08	0·94	1·21
	Khatra	0·21	0·48	..	..	1·07	0·20	..
	Indas	1·40	..	..	..	..	0·27	0·97
	Kotalpur	2·40	..	..	..	0·16	0·20	0·40
	Onda*							
	Gangajalghati	0·33	0·24	0·10	..	0·09	0·82	1·08
	Raipur	1·09	0·05	0·23	..	0·34	0·05	0·60
	Sonamukhi	..	..	..	..	0·55	0·24	..
	Taldangra	1·75	..	..	0·60	1·30	0·32	..
	Saranga	..	..	..	..	0·41	0·01	..
	Indpur	0·30	..	0·45	..	1·00	0·30	0·15
	Arhara	..	0·55	..	0·25	..	..	0·75
	Barjora	..	0·10	..	..	2·60	0·83	..
	Simlapal	..	..	..	0·80	0·30	0·30	..
	Mejia	0·60	0·05	0·15	..	..	0·70	..
	Siromanipur	..	..	..	..	0·13	0·62	..
	Palasdanga*							
	Chatna	..	0·41	..	0·09	0·07	1·11	0·24
	Ranibandh	0·11	0·15	0·15	2·25	0·10	..	..
	Saltora	0·60	0·26	..	..	..	1·16	..
	Joypur	..	0·26		0·04	1·08	0·26	..
	Ambikanagar*							
	Joyrampur	..	..	..	..	1·67	0·34	..
Midnapore ..	Contai	1·06	1·23	0·48	0·08	..	1·40	..
	Tamluk .	1·10	.	0·64	0·40	0·20	..	..
	Midnapore (Observatory) ..	0·26	.	..	0·02	0·37	0·10	0·02
	Ghatal	2·35	..	..	0·05	0·14	0·78	0·11
	Kukrahati	..	.	0·15	0·33	0·47	1·04	..
	Amlagura	0·15	..	0·20	..	0·10	0·40	0·25
	Panskura	0·25	0·16	..	0·07	4·09	0·57	0·12
	Dantan	0·71	0·12	0·59	..	1·09	..	..
	Chandrakona*							
	Pachet*							
	Bhagwanpur	..	0·23	..	0·15	0·20	0·70	..
	Kashiary*							
	Nayabasan	1·42	.	..	..	..	..	..
	Silda (Belpahari)	..	..	..	0·40	0·21	..	..
	Kharagpur	.	.	..	0·37	1·55	..	..
	Goaltore	0·46	..	..	..	0·48	..	0·04
	Salboni	..	..	..	0·01	..	..	..
	Narayangarh	..	..	0·30	0·10	0·25	..	..
	Ramnagar	2·30	0·48	0·19	0·69	1·54	..	0·01
	Mohanpur	..	0·15	0·05	0·25	1·25	..	..
	Jonka (Khajri) ..	2·45	0·45	0·55	0·25	0·05	0·30	0·05
	Nandigram .. .	0·60	..	..	0·70	1·50	..	..
	Moyna	0·09	..	0·16	0·52	0·23	..	..
	Pingla	..	..	..	0·70	0·60	..	..
	Narajole	..	..	..	1·00	0·20	0·20	0·60
	Kolaghat (Dainan)* ..							
	Balichak . ..	0·12	..	0·47	0·42	1·45	0·05	..
	Jhargram	1·84	..	..	..	0·40	0·50	0·07
Hooghly ..	Serampore	0·08	0·38	..	..	0·26	..	0·98
	Hooghly	0·30	0·20	0·30	..	0·18	0·10	0·90
	Arambagh . ..	0·31	0·09	0·03	0·76	0·29	0·24	0·89
	Chanditala	..	..	..		..	..	1·36
	Tentulia	0·25	0·79	..	0·24	1·00	0·77	..
	Boinchee*							
	Khanakul	0·07	..	..	0·02	1·42	0·90	..
	Tarakeswar	0·01	0·30	..	1·05	0·20	1·30	..
Howrah ..	Howrah	1·06	..	0·08	0·10	0·19	0·55	1·48
	Maheseroka	..	..	0·30	..	0·70	1·29	0·25
	Uluberia	..	0·30	..	0·12	0·07	0·10	1·42
	Amta	..	0·23	..	0·45	0·70	0·75	0·72
RAJSHAHI.								
Bogra	Boalia (Observatory) ..	0·13	0·09	0·21	0·41	0·77	0·43	...
	Nator	..	..	..	..	1·05	0·37	..
	Naogaon	0·41	0·97	..	0 23	0·47	0·04	..
	Lalpur	..	0·14	..	0·21	0·90	1·35	..
	Manda . ..	..	..	..	1·45	2·06	..	0·15
	Mahadebpur	0·46	0·38	1·22	0·10	0·56	1·22	0·70
	Tanor	0·60	..	0·80	0·15	0·05	0·10	0·11
	Chaugram*							
	Joari*							
	Badalgachi	0·37	..	..	0·11	0·15	0·19	0·09

Not reported.

FOR THE MONTH OF JUNE 1931.

28	29	30	31	Number of rainy days.	Average number of rainy days.	Total rainfall for the month.	Normal rainfall for the month.	Heaviest rainfall during the month.	Total rainfall from 1st to 30th June 1931.	Normal rainfall 1st to 30th June 1931
..	..	..		8	11·9	3·45	11·09	1·03	3·45	11·09
..	..	..		8	11·9	6·15	10·02	1·53	6·15	10·02
..	..	..		6	12·1	3·60	10·06	1·21	3·60	10·06
0·22	..	..		8	12·3	4·51	11·01	1·12	4·51	11·01
..	..	..		7	11·7	4 98	9·36	1·49	4·98	9·36
..	..	..		8	10·9	5·98	10·02	2·40	5·98	10·02
					10·7		8·20			8·30
..	..	..		7	1·4	3·75	10·62	1·08	3·75	10·62
..	..	..		7	12·1	5 82	10·18	2 41	5 82	10·18
..	..	0·07		4	10 9	1·47	0·77	0 55	1·47	0·77
..	..	..		7	11·0	7·85	8·40	2·15	7·85	8·40
..	..	..		3	11·2	2·04	11·05	1 60	2·04	11·05
0·25	..	..		8	11·2	2·08	8·78	1·00	2·08	8·78
..	..	..		5	(n)	2·25	(n)	0·75	2·25	(n)
..	..	..		7	(n)	5·96	(n)	2·60	5·96	(n)
..	..	0·08		6	(n)	4·03	(n)	1·30	4·03	(n)
..	..	..		6	(n)	2·77	(n)	0·70	2·77	(n)
..	..	..		5	(n)	3·52	(n)	1 35	3·52	(n)
					(n)		(n)			(n)
..	..	..		6	(n)	2·95	(n)	1·11	2·95	(n)
0·95	..	..		8	(n)	5·39	(n)	2·25	5·39	(n)
..	..	..		5	(n)	2·78	(n)	1·16	2·78	(n)
..	..	..		8	(n)	4·36	(n)	1·08	4·36	(n)
					(n)		(n)			(n)
..	..	..		5	(n)	3·68	(n)	1·67	3·68	(n)
..	..	..		9	11·2	6·93	10·48	1·60	6·93	10·48
..	..	..		6	11·6	2·94	10·62	1·10	2·94	10·62
..	..	..		7	12·3	4·40	10·04	1·27	4·40	10·04
..	..	..		7	12·0	5·18	10·13	2·35	5·18	10·13
..	..	..		8	11·8	7·96	12·31	3·30	7·96	12·31
..	..	..		7	11·7	2·85	10·34	1 30	2 85	10·34
..	..	..		7	12·6	4·20	10·92	1 68	4·20	10·92
..	..	..		9	11·6	5·45	10·44	1·27	5·45	10 44
					12·5		12·58			12·58
					12·1		11·82			11·82
..	..	..		10	14·1	3·65	14·26	0·80	3·65	14·26
					10·4		10·64			10·64
..	..	..		3	11·1	2·62	10·65	1·42	2·62	10·65
..	..	..		7	12·8	4·54	10·67	1·90	4·54	10·67
..	..	0·32		8	(n)	6·87	(n)	2·65	6·87	(n)
..	..	..		6	13·3	3·55	10·81	1·32	3·55	10·81
..	..	..		2	12·6	3·26	12·30	2·50	3·26	12 30
..	..	0·10		9	13·9	4·55	13·27	1·50	4·55	13·27
0·04	..	0·95		9	11·9	11·67	13·87	4·41	11·67	13·87
..	..	..		7	11·3	5·76	11 01	1·50	5·76	11·01
..	0·09	0·10		10	14·3	10·41	14·85	3·75	10·41	14·85
..	..	..		8	14·7	11·73	13·78	4·00	11·73	13·78
..	..	0·70		9	11·3	6·81	11·28	2·17	6·81	11·28
..	..	0·70		8	12·3	3·55	11·83	0·70	3·55	11·83
..	..	0·20		6	12·6	2·80	14·62	1·00	2·80	14·62
					(n)		(n)			(n)
		0·60		11	(n)	7·08	(n)	1·73	7·08	(n)
..	..	..		7	(n)	5·47	(n)	1·84	5·47	(n)
..	..	..		8	12·5	6·24	9·94	1·53	6·24	9·94
..	..	..		11	12·5	5·45	9·87	1·20	5·45	9·87
..	..	..		8	12·5	6·67	9·90	1·80	6·67	9·90
..	..	..		5	(n)	6·32	(n)	2·60	6·32	(n)
..	..	..		11	(n)	6·06	(n)	1·17	6·06	(n)
					(n)		(n)			(n)
..	..	0·23		9	(n)	6·86	(n)	1·40	6·86	(n)
..	..	0·70		12	(n)	5·76	(n)	1·30	5·76	(n)
..	..	..		9	12·7	7·50	11·21	1·91	7·50	11·21
1·10	..	..		10	12·7	6·59	11·99	1·29	6·59	11·99
..	..	..		9	13·9	8·04	11·20	1·58	8·04	11·20
..	..	..		11	12·9	7·17	12·54	1·90	7·17	12·54
0·71	..	..		13	13·1	10·65	11·17	3·33	10·65	
..	0·58	..		10	12·3	10·74	11·10	3·25	10·74	11·17
0·58	..	..		11	12·9	7·65	12·76	2·18	7·65	11·10
..	..	..		11	11·9	14·68	10·92	4·10	14·68	12·76
..	..	..		7	11·9	7·12	10·99	2·06	7·12	10·99
..	..	..		11	13·0	7·78	11·80	1·32	7·78	10·99
..	..	0·10		12	12·3	6·74	(n)	1·82	6·74	11·80
					(n)		(n)			(n)
					(n)		(n)			(n)
0·25	..	..		9	(n)	9·51		4·10	9·51	(n)

(n) Not ascertained.

DAILY RAINFALL RECORDED IN BENGAL

Division and district.	Station.	1	2	3	4	5	6	7
RAJSHAHI—*concld.*								
Dinajpur ..	Nithpur	..	..	..	..	..	..	..
	Nawabganj ..	..	..	..	..	..	..	0·57
	Gangarampur	..	..	..	..	..	..	..
	Churamon	..	..	..	..	..	..	..
	Raiganj	..	..	..	..	..	..	..
	Dinajpur (Observatory) ..	..	..	..	..	..	0·08	..
	Balurghat	..	..	..	..	..	..	..
	Thakurgaon	..	..	..	..	..	3·32	..
	Setabganj	..	..	..	..	..	..	..
	Ramganj	..	..	..	..	..	..	..
	Atwari	..	..	..	0·08	0·75	0·50	1·35
	Birganj	..	..	..	..	..	2·52	..
	Parbatipur	..	..	..	..	..	1·95	..
	Patnitola	..	..	..	..	..	..	..
	Sapahar	..	..	..	..	..	..	..
Jalpaiguri ..	Jalpaiguri (Observatory) ..	..	..	..	0·30	0·70	0·40	3·10
	Alipur Duars	4·44	0·08	..	2·22	0·78	0·05	0·52
	Falakata	..	..	..	1·57	1·05	..	2·84
	Debiganj	..	..	..	..	1·05	2·00	..
	Buxa*							
	Kalchini	1·65	1·82	0·71	0·45	1·61	0·04	0·34
	Kumargram	1·57	1·40	3·73	0·06	1·21	..	..
Darjeeling ..	Siliguri	..	..	..	0·46	1·32	0·22	..
	Darjeeling (Observatory) ..	..	..	..	..	..	0·97	1·50
	Kalimpong	..	..	..	..	..	0·21	0·58
	Mongpoo	0·01	..	..	..	0·12	0·79	1·80
	Kurseong	..	..	..	..	0·05	0·09	0·16
	Pedong	..	0·08	..	..	..	0·90	1·08
Rangpur ..	Bhawaniganj (Gaibandha) ..	..	..	..	..	..	..	..
	Rangpur (Observatory) ..	.	..	..	..	1·32	1·68	0·07
	Pirganj	..	..	..	..	..	..	..
	Kurigaon	..	..	..	..	1·24	..	..
	Gobindganj	..	..	..	..	0·45	..	..
	Bagdogra (Nilphamari) ..	..	..	..	0·10	3·15	..	2·23
	Ulipur	..	..	..	..	2 05	0·82	..
	Sunderganj	..	..	..	..	0·86	1·82	..
	Saidpur	..	..	..	..	1·96	..	4·08
Bogra ..	Sherpur*							
	Nowkhilla*							
	Bogra (Observatory) ..	..	..	..	..	..	..	..
	Panchbibi	..	..	..	..	..	..	..
	Khetlal	..	..	..	..	..	..	0·13
	Adamdighi	..	..	..	..	0·35	..	..
	Dubchanchia	..	..	..	..	..	..	..
Pabna ..	Shazadpur	..	..	..	..	.	..	..
	Pabna	..	..	..	..	..	..	0·18
	Sirajganj (Observatory) ..	..	..	..	..	..	..	..
	Iswardi	..	..	..	..	..	..	0·74
Malda ..	Malda (Observatory) ..	..	..	..	..	..	..	..
	Chanchal	..	..	..	..	..	..	..
	Gazol	..	..	..	..	..	..	..
	Sibganj	..	..	..	..	..	..	..
	Gomastapur	..	..	..	..	..	..	..
	Nawabganj*							
DACCA.								
Dacca ..	Munshiganj	..	..	..	..	..	..	..
	Dacca	..	..	..	..	..	..	..
	Nawabganj	..	..	..	..	..	..	..
	Narayanganj (Observatory) ..	..	..	..	..	..	..	..
	Narsingdi	..	..	..	..	..	..	..
	Manikganj	..	..	..	..	..	..	..
	Joydebpur	..	..	..	..	..	..	..
	Kapasia	..	..	..	..	..	..	..

*Not reported.

FOR THE MONTH OF JUNE 1931.

8	9	10	11	12	13	14	15	16	17	18	19	20
..	..	..	..	..	..	..	0·45	1·36	0·59	..	..	..
..	2·30	..	..	0·51	..	..	3·65	..	..	..	..	0·20
..	..	..	..	..	..	0·14	0·35	..	..	..	..	..
..	..	..	..	..	0·14	..	0·55	..	..	..	..	0·55
..	..	..	..	..	..	0·42	0·25	0·25	..	..	..	..
0·45	..	..	0·12	..	..	0·35	0·15	2·30	..	..	..	..
0·06	..	..	..	0·45	..	..	0·20	2·05	1·56	..	..	..
0·17	0·94	..	..	0·03	..	0·28	..	4·29	..	..	..	0·11
..	..	..	..	..	..	0·10	0·30	1·10	..	..	..	..
..	..	..	..	..	..	..	0·19	4·50	..	..	..	..
2·00	0·45	..	0·75	0·50	0·60	0·20	1·20	..	..	..		..
1·15	0·20	..	..	0·90	..	..	..	3·70	..	..	..	0·12
3·75	..	..	..	..	..	..	..	2·50	..	..	..	..
..	..	..	..	..	..	..	0·53	1·40	0·02	..	..	..
..	..	..	..	0·15	..	..	..	2·00	0·53	..	..	..
2·70	0·10	1·80	0·90	0·75	0 10	1·35	0·10	1·95	0·10	..	..	..
1·62	1·00	1·07	2·24	1·48	1·62	0·74	..	2·32	0·05	..	..	..
0·45	0·65	1·80	0·04	1·05	..	3·70	0·10	2·17	..	..	..	..
1·50	4·00	0·02	..	0·85	0·05	..	..	4·15	..	..	..	..
0·21	0·04	0 48	1·88	1·06	0·43	2·39	3·28	2·21	0·03	0·02	..	..
0·18	0·26	0·99	6·02	2·08	0·04	5·72	0·60	1·72	..	..	..	..
0·32	1·20	..	0·14	0·95	..	0·84	4·12	1·27	..	1·76	1·41	..
0·58	0·10	0·27	0·10	0·16	..	..	0·09	1·97	0·58	0·10	0·42	..
0·14	0·02	0·07	..	..	..	0·03	0·24	0·75	1·03	..	..	..
0·46	0·20	0·05	0·02	0·47	0·02	0·46	0·23	1·01	2·40	..	..	..
0·22	0·02	..	..	0·14	0·02	0·13	0·11	0·86	0·32	..	..	..
0·31	0·20	0·17	0·10	0·03	..	0·17	0·15	1·37	0·27	0·03	..	..
0·20	..	..	..	0·70	..	..	..	1·40	1·90	0·20	..	..
1·00	1·48	0·09	0·40	0·04	0·06	..	0·14	3·52	0·02	0·37	..	0·16
..	..	..	2·45	..	..	..	4·20	..	..	..	..	..
0·56	2·48	0·23	0·13	0·56	0·05	0·18	..	2·76	0·56	0·02	..	0·65
..	..	0·50	..	0·60	..	2·00	2·10	..	..	..	..	..
0·76	0·35	..	..	0·15	..	0·04	10·93	..	..	0·28	..	..
0·75	0·60	0·20	..	0·50	..	..	..	3·30	0·91	..	..	0·32
0·48	0·22	0·03	0·35	..	..	..	..	1·62	1·09	..	..	..
..	..	..	..	..	..	0·43	5·24	..	..	..	..	..
..	..	0·39	0·02	0·04	..	..	0·28	1·81	1·18	..	..	..
..	..	..	..	..	0·23	..	0·15	1·38	..	..	..	..
..	..	..	0·38	..	..	..	..	5·82	..	..	..	..
..	0·30	..	0·50	..	0·32	..	2·20	1·85	..	..	0·15	..
..	..	..	..	0·04	..	..	..	1·74	0·38	..	..	..
..	..	0·20	0·60	0·37	0·28	0·10	4·35	0·38	..	..	..	0·13
..	..	0·50	0·12	0·05	0·50	0·15	0·69	3·35	0·79	..	..	0·13
..	..	0·24	0·06	1·59	..	0·08	0·18	2·11	1·15	0 79	..	..
..	..	0·65	0·36	..	0·48	1·82	3·94	3·17	0·69	..	..	..
..	..	..	..	0·06	..	..	0·20	1·27	0·02	..	..	..
..	..	..	..	..	..	..	..	1·65	..	..	..	..
..	..	..	..	..	0·26	0·14	1·00	..	..	..	..	0·10
..	..	..	..	..	..	..	..	2·20	..	..	..	..
..	0·40	0·04	..	0·72	..	..	0·64	0·80	0·17	..	..	..
..	..	0·10	0·36	0·32	2·24	0·28	0·65	0·43	0·24	..	..	0·30
..	..	..	0·60	0·32	0·04	0·03	0·12	1·00	0·48	..	..	0·24
..	..	0·03	0·43	0·02	0·31	0·07	..	0·07	1·95	0·05	..	0·12
..	..	0·01	0·76	0·46	2·56	0·03	0·18	0·73	0·34	0·07	..	0·03
..	..	..	1·10	..	..	..	..	0·35	0·09	..	..	..
..	..	0·10	0·15	0·07	..	0·95	0·15	0·02	1·50	..	..	..
..	0·34	0·07	0·76	0·09	0·85	0·55	0·75	2·02	1·67	0·01	0·35	0·57
..	..	..	1·20	1·04	..	0·30	1·82	1·05	7·26	1·75	..	..

DAILY RAINFALL RECORDED IN BENGAL

Division and district.	Station.	21	22	23	24	25	26	27
RAJSHAHI—*concld.*								
Dinajpur	Nithpur	0·18	0·45	0·39	1·20	..	3·18	0·42
	Nawabganj	0·90	0·29	0·28	..	1·10	..	..
	Gangarampur	1·41	0·14	0·41	..	..	0·61	0·41
	Churaman	0·50	..	..	..	2·45	0·45	2·07
	Raiganj	..	..	2·75	..	..	2·22	..
	Dinajpur (Observatory)	..	0·55	0·21	..	1·20	0·20	0·02
	Balurghat	..	..	0·44	0·43	0·36	0·21	0·06
	Thakurgaon	..	..	1·30	0·14	0·52	0·12	0·06
	Setabganj	..	0·10	0·05	0·20	0·70	0·80	1·60
	Ramganj	..	..	0·79	..	..	..	0·50
	Atwari	..	3·50	0·50	0·80	1·05	0·30	1·00
	Birganj	0·50	0·80	0·76	0·46	0·74	0·84	0·82
	Parbatipur	..	..	0·35	1·50	0·50	2·00	..
	Patnitola	0·35	0·24	..	0·56	..	1·44	0·36
	Sapahar	..	0·42	..	1·75	0·12	0·51	0·50
Jalpaiguri	Jalpaiguri (Observatory)	..	0·10	1·30	1·70	0·65	0·40	1·60
	Alipur Duars	1·42	0·08	0·06	1·05	2·12	0·32	2·38
	Falakata	1·40	0·70	1·20	1·58	0·30	0·62	2·20
	Dobiganj	..	..	2·30	0·80	0·52	2·50	0·75
	Buxa*	..	..					
	Kalchini	0·06	0·67	0·33	2·82	3·29	0·11	1·05
	Kumargram	0·19	..	..	5·13	2·44	1·28	1·11
Darjeeling	Siliguri	0·16	0·18	2·56	4·45	3·70	1·59	1·25
	Darjeeling (Observatory)	0·38	0·28	2·14	1·04	0·35	3·16	1·09
	Kalimpong	..	..	1·80	0·24	0·33	1·43	1·31
	Mongpoo	0·93	0·01	1·69	0·70	0·27	2·56	4·83
	Kurseong	4·83	0·12	1·10	1·57	0·58	3·18	2·29
	Pedong	0·22	0·19	2·05	0·42	0·70	0·92	1·67
Rangpur	Bhawaniganj (Gaibandha)	..	..	0·50	0·70	1·70	..	0·21
	Rangpur (Observatory)	0·02	0·01	..	0·74	1·12	2·14	0·33
	Pirganj	..	2·45	..	0·20	0·85	1·35	..
	Kurigaon	..	..	..	0·73	0·40	0·91	2·16
	Gobindganj	..	0·75	..	0·26	1·80	1·00	0·60
	Bagdogra (Nilphamari)	0·05	0·03	0·72	1·62	..	0·34	0·37
	Ulipur	..	0·44	0·21	..	0·60	2·37	0·14
	Sunderganj	..	..	0·12	0·54	..	2·60	0·08
	Saidpur	..	0·20	0·29	2·40	0·06	4·68	..
Bogra	Sherpur*							
	Nowkhilla*							
	Bogra (Observatory)	0·08	..	..	0·09	0·34	0·93	1·42
	Panchbibi	0·21	..	1·15	0·42	0·47	1·02	0·17
	Khetlal	0·08	0·09	..	..	0·15	..	..
	Adamdighi	..	..	..	0·35	0·25	0·50	1·35
	Dubchanchia	..	..	..	0·04	0·60	1·10	..
Pabna	Shazadpur	..	0·34	0·11	0·02	1·13	0·37	..
	Pabna	0·09	..	..	0·15	0·50	2·35	0·95
	Sirajganj (Observatory)	0·60	0·13	0·02	..	0·28	0·64	2·65
	Iswardi	0·34	0·05	0·19	0·20	2·24	0·68	..
Malda	Malda (Observatory)	0·04	0·97	..	0·07	..	..	0·22
	Chanchal	3·10	0·63	0·82	..	..	1·80	0·72
	Gazol	0·05	0·10	..	..	..	..	1·20
	Sibganj	0·80	..	..	1·80	..	..	..
	Gomastapur	..	0·40	0·35	1·33	..	..	1·23
	Nawabganj*							
DACCA.								
Dacca	Munshiganj	0·71	..	0·10	0·27	0·47	1·11	0·05
	Dacca	0·52	0·74	..	0·04	0·38	0·92	..
	Nawabganj	..	0·09	..	0·03	0·81	1·30	0·40
	Narayanganj (Observatory)	..	0·47	0·15	0·69	1·38	0·77	..
	Narsingdi	..	0·15	..	..	..	..	..
	Manikganj	..	0·90	..	..	0·05	1·71	..
	Joydebpur	0·25	0·10	0·01	0·35	1·00	0·14	0·03
	Kapasia	0·14	..	0·13	..	0·08	0·64	0·28

*Not reported.

FOR THE MONTH OF JUNE 1931.

28	29	30	31	Number of rainy days.	Average number of rainy days.	Total rainfall for the month.	Normal rainfall for the month.	Heaviest rainfall during month.	Total rainfall from 1st to 30th June 1931.	Normal rainfall from 1st to 30th June 1931.
..	..	0·32		10	11·1	8·54	11·27	3 18	8·54	11 27
.	..	..		9	13·4	9·81	15·13	3·65	9·81	15 13
..	..	0·61		8	13·2	4·11	12·91	1 41	4·11	12·91
..	..	..		7	11·9	6·71	11·56	2·45	6·71	11 56
..	.	0·45		6	12·1	6·34	12 77	2·75	6·34	12·77
..	..	..		9	14·1	4·63	14·05	2·30	4·63	14·05
0·16	..	0·17		10	13·2	6·15	11·98	2·05	6·15	11 98
..	1 60	0·11		12	13·9	12·99	17·00	4·29	12·99	17 00
..	..	..		8	13·1	4·95	15·12	1·60	4·95	15·12
..	..	..		4	14·2	6·38	16 00	4 90	6·38	16 00
3·00	1·10	..		17	15·4	19·63	20·85	3·50	19·63	20 85
0·22	0·14	..		15	14·6	13·87	16·60	3·70	13·87	16·60
..	..	..		7	14·8	12·55	14·71	3·75	12·55	14·71
0·35	..	..		8	(a)	5·25	(a)	1·44	5·25	(a)
0·25	..	..		9	(a)	6·31	(a)	2·00	6·31	(a)
2·20	2·10	3·22		23	17·9	27·62	23·73	3·22	27·62	23 73
2·25	6·12	0·68		20	17·6	37·31	30·66	6·12	37·31	30·66
0·30	3·97	0·31		21	16·7	28·60	23·86	3·97	28·60	23·86
0·15	5·80	0·31		15	16·3	28·15	19·95	5 80	28·15	19·95
					22·7		30·00			30·00
0·73	0·37	0·48		23	20·6	28·56	28·73	3·29	28·56	28·73
1·34	6·73	0·16		20	19·5	43·96	32·91	6 73	43·96	32·91
3·58	0·74	0·83		22	19·7	30·05	25·40	4·45	30·05	25·40
0·21	0·81	0·34		21	20·8	16·64	24·86	3·16	16·64	24 86
0·05	..	..		11	16·9	8·23	17·48	1·80	8·23	17·48
0·32	1·07	0·03		18	20·0	20·45	26·06	4·83	20·45	20·06
0·11	0·95	0·16		17	22·5	17·05	32·87	4·83	17·05	32·87
1·07	0·76	0·39		20	22·8	13·25	19·70	2·05	13·25	19·70
1·35	..	..		10	14·3	8·86	15·47	1·90	8·86	15·47
0·52	0·07	..		14	16·0	15·30	17·61	3·52	15·30	17·61
..	2·55	..		7	13·7	14·05	16·52	4·20	14·05	16·52
0·87	0·07	0·03		15	15·7	14.59	22·20	2·76	14·59	22·20
..	..	0·55		11	14·0	10·61	14·31	2·10	10·61	14·31
0·42	..	..		13	15·5	21·54	19·85	10 93	21·54	19·85
0·62	..	0·12		16	15·2	13·95	18·95	3·30	13·95	18·95
0·55	0·52	..		12	13·9	10·88	15 88	2·60	10·88	15·88
..	..	..		8	13·9	19·44	15·90	5·24	19·44	15·90
					13·4		11·78			11·78
					13·5		13·43			13 43
0·02	..	..		7	14·7	6·60	14·03	1·81	6·60	14·03
0·25	..	..		10	12·6	5·45	11·90	1 38	5·45	11·90
1·40	..	..		5	13·7	8·05	8·45	5·82	8·05	8·45
..	..	..		11	(a)	8·12	(a)	2·20	8·12	(a)
0·92	0·21	..		6	(a)	5·03	(a)	1·74	5·03	(a)
0·21	..	0·03		13	12·4	8·52	10·60	4·35	8·52	10·60
0·04	..	..		13	13·9	10·54	11·33	3·35	10·54	11·33
..	0·21	..		12	14·7	10·82	12·41	2·65	10·82	12·41
..	..	..		13	13·5	15·46	10·96	3·94	15·46	10·96
0·91	0·02	..		5	11·6	3·78	10·35	1·27	3·78	10 35
0·91	..	..		7	11·6	9·03	11·37	3·10	9·03	11·37
2·50	..	..		7	11·7	5·35	10·36	2·50	5·35	10·36
0·83	..	..		4	11·6	5·63	9·72	2·20	5·63	9·72
..	..	..		9	10·9	6·08	10·48	1·33	6·08	10·48
					11·4		11·78			11·78
..	..	..		14	15·8	7·72	14·50	2·24	.	14 50
..	..	0·22		11	15·3	5 65	13·56	1·00	..	13·56
..	..	0·15		8	13·3	5·83	15·52	1·95	..	15·52
..	..	0·04		11	14·8	8·67	12·95	2·56	..	12·95
..	..	..		3	14 8	1·69	14·92	1·10	..	14·92
..	..	..		10	13·7	6·80	11·54	1·71	..	11 54
0·50	..	0·10		16	15·5	10·72	14·04	2·02	..	14·04
0·02		0·19		11	15·9	15·69	15·13	7·26	..	15·13
..		..								

(a) Not ascertained.

DAILY RAINFALL RECORDED IN BENGAL

Division and district.	Station.	1	2	3	4	5	6	7
DACCA—*concld.*								
Mymensingh	Kishorganj	..	..	..	..	..	..	0·63
	Atia (Tangail)	..	..	..	..	..	..	..
	Sarisabari	..	..	..	..	..	..	..
	Mymensingh (Observatory)	..	.	..	..	..	0·68	0·71
	Jamalpur	..	..	..	..	..	0·42	0·10
	Netrokona	..	0·40	..	..	..	0·19	..
	Pingna	..	..	..	..	..	..	..
	Durgapur	..	..	..	..	..	..	..
	Sherpur (Town)	..	..	..	..	..	1·60	..
	Dewanganj	..	..	..	..	0·44	..	..
	Nalitabari	..	..	..	..	..	0·50	..
Faridpur	Madaripur	..	..	..	..	..	..	..
	Faridpur (Observatory)	..	..	..	..	..	..	..
	Rajbari (Goalundo)	..	..	..	..	..	..	1·53
	Haridaspur	..	..	..	..	..	..	..
	Takerhat	..	..	..	..	..	..	..
	Bhanga	..	..	.	..	..	..	..
	Pangsa	..	..	..	..	..	..	0·65
	Baliakandi	..	..	..	..	..	..	..
	Bhusna	..	..	..	..	..	..	..
	Palong	..	..	..	..	..	..	..
Bakarganj	Patuakhali	..	..	..	..	..	..	..
	Barguna	..	..	..	..	..	..	..
	Pirojpur	..	..	..	..	..	..	..
	Barisal (Observatory)	..	..	..	..	..	..	..
	Gaurnadi*	..	..					
	Bhola	..	..	..	..	..	..	..
	Daulatkhan	..	..	..	..	..	..	..
	Bauphal	..	..	..	..	..	..	..
CHITTAGONG.								
Chittagong	Cox's Bazar (Observatory)	..	0·06	..	..	..	..	..
	Chittagong (Observatory)	..	..	..	..	..	..	..
	Kutubdia	..	..	..	..	..	..	..
	Satkania	..	..	..	..	..	..	..
	Kodala*	..						
	Mirsarai	..	..	..	..	..	..	..
Tippera	Comilla (Observatory)	..	..	..	..	..	..	..
	Chandpur	..	..	..	..	..	..	..
	Brahmanbaria	..	..	..	..	..	..	..
	Ramchandrapur	..	..	..	..	..	..	..
	Nasirnagar*	..						
	Daudkandi	..	..	..	..	..	..	..
	Kasba	..	..	..	..	..	..	..
	Laksam	..	..	..	..	..	..	..
Noakhali	Noakhali (Observatory)	..	..	..	..	..	..	..
	Feni	..	..	..	..	..	..	..
	Harishpur	..	..	..	..	..	..	..
	Ramganj	..	..	..	..	..	..	..
	Chhagalnaya	..	..	..	..	..	..	..
	Hatiya	..	..	..	..	..	..	..
	Lakhimpur	..	..	..	..	..	..	..
Chittagong Hill Tracts	Rangamati	..	0·11	..	..	..	..	..
	Bandarban	..	0·05	..	..	..	..	..
	Barkal	..	0·25	..	..	..	..	..
	Mahalchari	..	..	..	..	..	..	..
	Lama	..	0·07	..	..	..	..	..
	Ramgarh	..	..	..	..	..	..	..
	Manikseri	..	..	..	..	..	..	..
	Dighinala*	..						
	Mainmukh	..	..	..	..	..	..	..
	Kaptai	..	0·29	..	..	..	..	..
	Panchhari	..	..	..	..	..	..	..
	Nakhyongchhari	..	..	..	..	..	..	..
Hill Tippera	Agartala	..	..	..	..	..	..	..
Cooch Behar	Dinhata	..	0·04	.	..	3·68	..	0·12
	Cooch Behar (Observatory)	..	0·11	..	0·67	0·72	..	4·07
	Mickliganj	..	..	..	..	3·30	2·01	3·00
	Mathabhanga	..	..	..	0·24	0·85	0·99	2·47
	Fulbaria (Tufanganj)	2·00	3·11	..	3·35	0·60	..	1·85

* Not reported.

FOR THE MONTH OF JUNE 1931.

8	9	10	11	12	13	14	15	16	17	18	19	20
..	..	..	..	2·02	..	0·15	3·28	0·48	0·73	..	..	0·36
..	..	..	1·26	0·80	..	0·32	1·00	..	0·15	..	..	0·45
..	..	..	..	..	..	..	2·25	2·06	1·54	..	.	..
..	..	0·30	..	1·63	0·30	0·03	1·65	1·26	0·96	0·71	..	0·52
..	..	1·38	..	0·76	..	..	0·44	3·54	1·50	..	..	0·22
..	..	0·07	..	3·05	..	..	0·43	1·62	2·87	0·80	..	0·83
..	0·15	..	0·45	..	..	0·60	1·80	..	..	.	..	1·60
..	0·75	0·30	0 40	0·50	0·50	1·22	1·78	1·50	2·80	..	0·30	0·20
..	..	..	..	1·70	..	..	1·90	3·10	1·45	0·15	..	0·21
..	..	0·32	0·85	..	..	0·11	2·56	2·61	..	..	..	..
..	..	..	..	1·50	0·70	0·50	0·50	1·00	1·70	..	..	0·50
..	..	..	..	..	6·15	0·07	0·11	0·12	0·47	..	..	..
..	..	0·24	0·43	0·10	1·10	0·04	0·18	1·20	0·05	..	..	0·03
..	..	0·52	0·69	..	0·74	0·10	0·22	3·02	0·02	..	..	..
..	..	..	..	0·13	0·05	0·15	..	0·90	..	1·22	..	0·13
..	..	..	..	1·55	0·21	0·25	0·07	0·41	..	..	..	..
..	0·05	..	..	0·85	..	0·35	0·30	0·50	..	..	..	..
..	..	..	..	0·25	0·87	0·95	0·62	0·45	..	..	..	..
..	0·13	0·27	0·67	0·95	0·06	..	0·07	1·98	..	..	..	..
..	..	..	..	..	1·20	..	..	..	..	..	..	..
..	..	..	..	..	1·51	..	0·10	..	..	..	.	..
..	..	..	..	..	2·01	2·30	1·10	0·18	0·62	0·10	..	0·50
..	..	..	..	..	0·15	1·90	2·03	0·17	1·30	..	..	0·22
..	..	0·02	..	..	1·00	1·04	3·22	3·21	0·97	0·13	0·65	0·19
..	..	..	..	..	0·35	0·20	1·93	..	1·54	..	..	0·28
..	..	..	..	..	1·67	0·29	0·55	0·03	0·27	0·02	0·27	0·22
..	..	..	..	..	0·36	0·50	7·50	0·25	1·09	1·27	0·55	0·45
..	0·60	..	..	0·84	..	1·00	..	0·80	0·21	..	..	1·11
..	..	0·07	..	0·12	2·51	0·07	1·18	..	4·15	0·62	0·36	0·14
..	..	..	0·02	0·26	3·62	..	0·04	0·32	2·53	0·58	0·02	0·50
..	..	..	..	..	4·37	0·20	0·41	..	3·35	0·30	0·10	..
..	..	..	..	0·50	0·45	0·75	0·40	1·85	1·10	0·50	0·67	0·45
0·50	..	..	0·15	1·75	..	1·20	0·55	2·05	0·75	..	..	..
..	..	..	0·11	1·16	0·90	..	0·50	2·12	1·08	..	..	..
..	..	0·00	..	0·22	0·82	0·04	0·06	..	0·61	..	..	0·41
..	..	0·06	0·37	2·50	0·05	..	2·32	0·37	1·28	..	0·05	0·64
..	..	..	0·85	1·05	0·18	..	..	1·75	..	..	..	..
..	..	0·25	..	0·19	2·64	0·45	0·23	0·43	1·81	1·23	0·17	..
..	..	..	0·05	1·30	..	0·10	2·45	1·60	0·65	0·05	0·03	..
..	..	..	0·05	0·03	0·35	..	..	0·08	0·30	..	..	..
..	..	..	0·02	0·02	1·16	0·03	0·15	0·50	0·90	0·88	0·30	0·10
..	..	..	..	2·61	1·13	..	0·17	0·23	1·53	0·74	..	..
..	..	..	0·12	..	3·75	..	1·07	0·28	3·71	1·06	..	..
..	..	..	..	..	1·80	..	0·08	0·16	1·18	0·15	..	..
..	..	2·35	1·56	..	0·08	0·78	0·11	1·51	0·27	..	0·07	..
..	..	..	2·55	1·65	..	..	0·55	..	1·40	0·65	..	0·55
..	..	..	..	0·38	2·70	..	..	1·30	..	..	..	1·38
..	..	0·26	0·54	1·53	1·66	0·03	0·70	..	0·80	0·10	0·50	0·46
..	..	..	..	..	3·80	0·01	0·40	..	0·91	0·27	0·79	0·05
..	1·20	2·26	1·81	..	0·30	0·90	..	0·31	0·23	0·22	0·32	0·09
..	0·15	0·17	2·45	0·47	0·65	2·50	0·34	0·60	1·00	0·13	..	1·14
..	..	..	..	..	3·50	..	0·92	0·47	3·38	..	..	..
..	..	..	..	4·25	2·38	..	1·05	0·03	1·43	0·20	0·05	0·24
..	..	..	4·00	2·55	..	3·63	0·11	1·65	..	..	0·25	..
..	..	0·55	..	2·23	1·40	..	2·76	0·12	1·40	0·05	..	0·15
..	0·53	..	0·66	1·50	..	0·50	..	0·90	0·40	0·22	0·95	0·05
..	..	0·85	..	1·85	1·21	..	1·34	0·24	0·60	..	..	0·10
..	..	..	..	0·38	2·30	..	0·40	..	2·70	0·21	0·90	..
..	..	0·35	3·85	0·08	..	3·04	1·10	0·85	..	0·03	..	0·18
2·06	4·24	2·46	0·24	2·86	0·02	0·06	..	4·24	1·26	..	..	..
3·67	0·96	1·90	0·52	1·40	0·03	..	..	2·25	0·13	..	..	0·12
3·96	1·07	1·00	0·97	2·00	..	..	..	3·10	..	..	..	0·14
1·50	2·44	1·25	0·61	2·84	0·02	0·09	..	3·19	0·06	..	..	0·31
1·86	1·69	2·50	0·88	1·82	0·03	0·64	..	3·06	0·48	..	..	..

DAILY RAINFALL RECORDED IN BENGAL

Division and district.	Station.	21	22	23	24	25	26	27
DACCA—*concld.*								
Mymensingh ..	Kishorganj	..	0·09	0·39	0·13	0·20	4·78	3·71
	Atia (Tangail)	..	0·15	..	0·28	1·22	0·42	..
	Sarisabari	0·91	0·67	0·45	0 14	0·08	0·49	0·19
	Mymensingh (Observatory) ..	0·07	..	0·64	0·07	0·08	1·83	1·64
	Jamalpur	0·13	0·59	0·29	0·37	0·07	0·62	0·72
	Netrokona	0·28	0·65	0·50	1·06	0·03	5·10	2·70
	Pingna	..	..	..	..	1·30	1·80	..
	Durgapur	1·30	1·40	2·50	2·16	3·25	1·25	1·23
	Sherpur (Town)	0·54	0·18	0·68	0·36	0·68	1·20	0·90
	Dewanganj	0·31	..	..	0·17	2·13	..	0·10
	Nalitabari	0·15	0·25	0·40	0 60	0·50	1·25	..
Faridpur ..	Madaripur	..	0·08	0·43	0·38	0·08	0.07	..
	Faridpur (Observatory) ..	0·15	..	..	..	0·20	0·98	5·30
	Itajbari (Goalundo) ..	0·07	0·04	0·20	0·56	1·00	0·75	2·26
	Hardaspur	0·04	0·07	0·33	0·06	0·07	0·08	..
	Takerhat	0·02	..	0·12	0·54	0·11	0·64	..
	Bhanga	..	..	0·33	0·07	0·35	..	0·07
	Pangsa	..	..	..	0·60	0·50	0·68	0·70
	Baliakandi	..	..	..	..	1·36	0·26	1·17
	Bhusna	..	..	0·30	0·24	0·10	0·15	..
	Palong .. .	1·15	..	..	..	0·62	..	..
Bakarganj ..	Patuakhali	1·20	1·87	1·38	1·52	0·67	1·10	1·18
	Barguna	.	0·32	0·19	0·05	0·09	0·16	0·57
	Pirojpur	0·68	0·09	0·65	0·85	1·05	1·09	..
	Barisal (Observatory) ..	..	0·77	..	..	0·39	2·54	0·78
	Gaurnadi*							
	Bhola	3·60	1·70	..	0·23	0·32	0·69	1·37
	Daulatkhan	0·95	1·40	0·80	0·54	0·70	0·24	..
	Bauphal	1·70	..	1·20	..	0 50	..	..
CHITTAGONG.								
Chittagong ..	Cox's Bazar (Observatory) ..	..	0·39	0·05	0·03	2·60	0·76	..
	Chittagong (Observatory) ..	..	0·53	..	0·04	0·06	1·60	..
	Kutubdia	..	..	0·23	0·78	1·02	..	..
	Satkania	0·15	..	..	0·18	1·75	0·25	0·40
	Kodala*							
	Mirsarai	0·19	..	2·60	1·24	0·45	0·75	..
Tippera ..	Comilla (Observatory) ..	0·05	0·35	0·03	0·78	1·22	1·10	0·85
	Chandpur	0·10	0·35	0·08	..	1·58	0·20	0·33
	Brahmanbaria .. .	0·10	0·14	0·08	0·09	0·66	0·15	0·78
	Ramchandrapur	..	..	0·45	0·80	0·52	0·30	..
	Nasirnagar*							
	Daudkandi	0·29	1·13	0·37	1·14	..	0·35	0·43
	Kasba	..	..	..	0·03	0·50	1·62	..
	Laksam	0·63	0·32	0·15	..	0·60	1·00	0·30
Noakhali ..	Noakhali (Observatory) ..	0·06	0·92	0·10	0·16	1·33	1·40	0·32
	Feni	0·18	..	..	3·02	5·29	2·31	0·88
	Harishpur	0·12	0·10	..	0·60	1 30	1·22	0·30
	Ramganj	..	0·40	1·10	0·60	0·90	1·20	0·55
	Chhagalnaya	0·65	.	0·15	0·19	1·08	3·55	2·53
	Hatiya	1·32	0·15	..	0·75	0·86	2·55	0·86
	Lakhimpur	..	..	1·00	..	0·72	1·85	0·68
Chittagong Hill Tracts	Rangamati	0·10	0·80	1·37	0·14	0·66	0·11	0·13
	Bandarban	..	0·09	0·94	0·06	0·25	0·27	0·36
	Barkal	0·16	0·25	0·41	0·08	0·06	0·40	0·32
	Mahalchari	1·00	0·70	0·13	0·14	1·23	0·14	..
	Lama	..	..	0·20	0·31	0·52	0·04	0·45
	Ramgarh	0·44	0·31	0·03	1·51	0·71	2·51	0·23
	Manikseri	0·35	0·30	0·10	0·30	2·20	..	..
	Dighinala*							
	Mainmukh	0·30	0·75	0·60	0·13	0·75	1·00	0·73
	Kaptai	0·10	0·42	0·05	..	..	1·20	0·95
	Panchhari	0·13	0·37	0·11	0·62	0·65	1·15	0·44
	Nakhyongchhari	0·26	..	..	..	1·10	..	0·49
Hill Tippera ..	Agartala	..	0·08	0·17	0·16	1·23	2·27	..
Cooch Behar ..	Dinhata	..	..	..	0·46	1·14	2·04	2·58
	Cooch Behar (Observatory) ..	0·11	..	..	1·17	1 83	0·81	2·53
	Mekliganj	..	0·70	0·84	1·54	0 10	1·90	2·45
	Mathabhanga	..	0·27	1·83	2·01	0·62	2·87	2·90
	Fulbaria (Tufanganj) ..	0·14	..	0·02	2·13	1·10	0·72	3.66

* Not reported.

DACCA, *the 14th July 1931.*

FOR THE MONTH OF JUNE 1931.

28	29	30	31	Number of rainy days.	Average number of rainy days.	Total rainfall for the month.	Normal rainfall for the month.	Heaviest rainfall during the month.	Total rainfall from 1st to 30th June 1931.	Normal rainfall from 1st to 30th June 1931.
0·20	..	..		13	16·9	17·15	19·29	4·78	17·15	19·29
..	..	..		10	13·2	6·04	12·00	1·25	6·04	12·00
..	..	..		9	15·0	9·38	13·09	2·66	9·38	13·09
2·15	1·38	0·11		16	18·2	16·72	18·71	2·15	16·72	18·71
0·07	..	0·45		15	15·5	11·69	15·36	3·54	11·69	15·36
0·75	0·64	0·55		18	19·5	23·12	23·66	5·10	23·12	23·66
..	..	..		7	14·2	6·70	13·75	1·80	6·70	13·75
0·70	0·64	..		20	18·4	24·68	26·99	3·25	24·68	26·99
0·04	..	..		14	16·2	14·69	15·35	3·10	14·69	15·35
..	..	..		10	13·9	9·60	16·23	2·61	9·60	16·28
..	..	..		14	17·0	10·05	21·71	1·70	10·05	21·71
..	..	..		7	15·4	8·56	13·12	6·15	8·56	13·12
..	0·72	..		11	15·4	10·72	13·36	5·30	10·72	13·36
..	0·58	..		13	14·5	12 30	12·30	3·02	12.30	12·30
..	..	0·13		7	16·3	2·36	13·25	0·90	2·36	13·25
..	..	0·68		8	17·5	4·00	17·41	1·55	4·00	17·41
0·09	..	0·25		7	17·4	3·21	13·98	0 85	3·21	13 98
..	..	..		10	16·7	6·27	15·17	0·95	6·27	15·17
..	0·18	..		9	16·6	7·10	15·01	1·98	7·10	15·01
..	0·35	..		6	15·8	2·34	12·89	1·20	2·34	12·89
0·31	..	..		5	17·8	3·69	18·74	1·51	3·69	18·74
0·11	0·92	0·04		16	17·9	17.13	21·94	2·30	17·13	21·94
0·10	0·38	..		12	18·1	7.63	21·70	2·08	7·63	21·70
0·08	0·09	0·06		13	16·4	15·07	15·29	3·22	15·07	15·29
..	0·12	0·03		10	17·2	8·93	16·33	2·54	8·93	16·33
					15·5		13·77			13.77
0·12	0·28	..		14	17·9	11·63	18·68	2·60	11.63	18·68
0·21	0·23	0·12		17	18·1	17·22	21·22	7·50	17·22	21·22
0·49	0·05	0·35		11	17·1	8·85	18·08	1·70	8·85	18·08
0·66	0·72	0·91		13	20·1	15·34	31·73	4·15	15·34	31·73
..	0·10	0·13		10	16·6	10·35	20·79	3·62	10·35	20·79
0·59	0·68	0·56		12	16·8	12·60	24·24	4·37	12·60	24·24
0·20	0·45	..		16	17·3	10·05	20·41	1·85	10·05	20·41
					17·4		18·12			18·12
0·62	..	0·35		14	17·9	14·05	23·38	2·95	14·05	23·38
0·05	0·35	0·42		13	17·3	11·67	18·22	2 12	11·67	18·22
..	0·31	0·05		10	16 9	5·25	15.57	1·58	5·25	15.57
..	0·05	0·04		11	15·8	9·73	15·75	2·50	9·73	15·75
..	..	0·30		9	13·8	6·20	16·73	1·75	6.20	16·73
					14·6		15·59			15·59
2·21	0·16	0·05		17	14·8	13·53	14·39	2·64	13·53	14·39
..	..	0·13		8	16·0	8·51	15·30	2·45	8·51	15·30
0·08	0·15	0·20		9	15·0	4·24	16·57	1·00	4·24	16 57
0·10	1·45	0·52		16	18·5	10·42	23·27	1·45	10·42	23·27
0·54	0·05	..		12	17·7	18·68	22·89	5·29	18·68	22·89
0·03	1·37	0·28		14	17·1	15·31	21·68	3.75	15.31	21·68
..	0·35	0·20		12	16·6	8·67	17·15	1·89	8·67	17·15
0·80	0·99	..		14	17·7	16·67	20·51	3·55	16·67	20·51
0·15	..	0·32		14	18·8	14·31	22·66	2·55	14·31	22·66
..	..	..		8	18·4	10·01	20·80	2·70	10·01	20·80
0·46	0·26	0·27		20	19·7	10·99	17·85	1·66	10·99	17·85
..	0·42	0·87		11	19·3	9·54	20·07	3·80	9·54	20·07
0·07	1·00	..		15	20·9	10·73	18·64	2·66	10·73	18·64
0·31	0·05	0·15		20	19·0	13·45	15·39	2·50	13·45	15·39
1·74	0·04	0·11		10	20·8	11·75	26·80	3·50	11·75	26·80
0·21	0·05	0·44		14	19·6	16·16	17·33	4·25	16·16	17·33
..	..	0·80		12	(n)	16·24	(n)	4·00	16·24	(n)
					(n)		(n)			(n)
1·00	1·02	0·90		17	(n)	15·84	(n)	2·76	15·84	(n)
0·05	0·40	0·20		14	(n)	9·37	(n)	1·50	9·37	(n)
..	..	0·29		15	(n)	10·04	(n)	1·85	10·04	(n)
0·37	0·30	0·80		12	(n)	10·21	(n)	2·70	10·21	(n)
..	..	0·15		11	15·5	13·54	15·41	3·85	13·54	15·41
2·04	4·84	..		15	17·7	34·38	25·99	4·84	34·38	25·99
2·31	3·53	0·59		20	19·0	29·52	32·70	4·07	29·52	32·70
0·65	6·80	0·20		19	17·8	35·82	25·06	6·80	35 82	25·06
0·47	6·90	0·27		20	18·0	35·00	28·28	6·90	35·00	28·28
2·60	3·40	0·46		21	18·5	41·10	29·10	4·85	41·10	29·10

(n) Not ascertained.

J. C. ROY, for *Director of Agriculture, Bengal.*

Vital statistics of towns with a population of 50,000 and over of the Bengal Presidency for the week ending Saturday, the 11th July 1931.

District.	No.	Towns.	Population under registration according to Census of 1921.			Births registered.		Deaths registered.																						
			Male	Female.	Total	Number registered (excluding still-births).	Still-births registered.	Cholera.	Small-pox.	Plague	Malaria	Enteric fever.	Measles.	Relapsing fever.	Kala-azar.	Other fevers.	Dysentery.	Diarrhœa	Influenza.	Pneumonia	Phthisis	Other respiratory diseases	Injuries including suicide	Deaths from child-birth	Other causes.	Total of all causes.			Total of corresponding week of the previous year.		
																									Male.	Female.	Total	Male	Female	Total.
Calcutta. ..	1	Calcutta ..	724,248	353,016	1,077,264	422	31	34	4	..	6	12	3	..	8	28	26	4	12	29	58	77	16	2	211	316	214	530	298	229	527
Burdwan ..	2	Asansol Mining Settlement	176,814	152,539	329,353	188	2	..	..	..	2	..	..	..	..	27	4	..	..	13	..	9	2	..	48	47	58	105	35	36	71
Howrah ..	3	Howrah .	128,472	66,829	195,301	80	2	3	2	..	..	3	..	.	1	5	5	9	..	15	7	14	4	1	32	53	48	101	50	56	106
Dacca ..	4	Dacca ..	67,333	52,117	119,450	45	1	..	..	..	..	2	..	..	3	7	6	3	1	6	3	5	2	..	18	29	27	56	35	13	48
24-Parganas	5	Bhatpara .	45,723	19,886	65,609	18	..	..	1	..	..	..	..	..	..	9	1	1	..	..	..	1	..	..	4	9	8	17	11	5	16
	6	Titagarh ..	36,533	15,918	52,451	8	2	..	..	..	..	..	..	..	..	13	1	1	..	..	..	..	..	..	..	5	10	15	7	6	13

R. B. KHAMBATA, M.R.C.S. (Eng.), L.R.C.P. (Lond.), D.P.H. (Camb.), *Director of Public Health, Bengal (offg.).*

CALCUTTA, *the 18th July 1931.*

IRRIGATION DEPARTMENT, BENGAL.

Abstract statement showing the approximate volume of traffic and the tollage on canals in Bengal classed as Major Works and Minor Works and Navigation for the month of April 1931 as compared with the corresponding month of the previous year.

Canals.	1931-32					
	Weight of cargo.		Rafts.		Tollage.	
	During the month.	To end of the month	During the month	To end of the month	During the month.	To end of the month.
	Tons.	Tons.	No.	No.	Rs.	Rs
Major Works.						
Midnapore Canal	2,060	2,060	....	....	2,149	2,149
Hijili Tidal Canal	7,026	7,026	300	300	9,979	9,979
Total ..	9,086	9,086	300	300	12,128	12,128
Minor Works and Navigation.						
Calcutta and Eastern Canals ..	25,718	25,718	1,190	1,190	17,806	17,806
Tolly's Nala	25,575	25,575	19,960	19,960	8,179	8,179
Madaripur Bil Route	13,839	13,839	2,560	2,560	8,145	8,145
Total ..	65,132	65,132	23,710	23,710	34,130	34,130
Magrahat Channels	4,317	4,317	560	560	648	648
Orissa Coast Canal	3,817	3,817	5,675	5,675	2,882	2,882
GRAND TOTAL ..	73,266	73,266	29,945	29,945	37,660	37,660

Canals.	1930-31.					
	Weight of cargo.		Rafts.		Tollage.	
	During the month.	To end of the month.	During the month.	To end of the month.	During the month.	To end of the month.
	Tons.	Tons.	No.	No.	Rs.	Rs.
Major Works.						
Midnapore Canal	3,602	3,602	1,475	1,475	3,577	3,577
Hijili Tidal Canal	529	529	95	95	796	796
Total ..	4,131	4,131	1,570	1,570	4,373	4,373
Minor Works and Navigation.						
Calcutta and Eastern Canals ..	30,627	30,627	42,251	42,251	21,699	21,699
Tolly's Nala	20,643	20,643	18,700	18,700	6,606	6,606
Madaripur Bil Route	11,478	11,478	1,010	1,010	6,581	6,581
Total ..	62,748	62,748	61,961	61,961	34,886	34,886
Magrahat Channels	2,647	2,647	1,844	1,844	579	579
Orissa Coast Canal	2,242	2,242	5,200	5,200	2,124	2,124
GRAND TOTAL ..	67,637	67,637	69,005	69,005	37,589	37,589

Canal.	April 1931.			
	Tollage, 1931-32		Tollage, 1930-31.	
	During the month.	To end of the month.	During the month.	To end of the month
	Rs	Rs.	Rs.	Rs.
Sundarbans Steamer Route ..	4,52)	4,52)	4,392	4,392

B. L. SUBARWAL,

Personal Assistant to the Chief Engineer to the Government of Bengal.

CALCUTTA, *the 11th July 1931.*

DEPARTMENT OF AGRICULTURE, BENGAL.

Dacca, the 18th July 1931.

Monthly Weather and Crop Report of Bengal for June 1931.

I. **Character of the season.**—During the month under review, the rainfall was below the average, except in Pabna and Cooch-Behar State where it was above the normal. The usual rainfall statement is appended.

II. **Progress of agricultural operations.**—Preparatory tillage for winter paddy and sowing of the same in nurseries continued favourably. Harvesting of autumn paddy and lowland jute commenced in parts of East Bengal during the month. Transplantation of winter rice commenced in some districts.

III. **State of standing crops.**—The condition of standing crops was reported to be generally satisfactory.

IV. **Prospects and probable outturn.**—The prospects of deep water paddy, sugarcane and other standing crops were reported to be generally promising.

V. **Damage to standing crops.**—Some damage to standing autumn crops by heavy rain was reported from parts of East Bengal.

VI. **Condition of agricultural stock.**—The condition of live-stock was, on the whole, fair. Sporadic cases of cattle-disease, however, were reported from nine districts of the Province.

VII. **Failure of pasturage and fodder.**—The supply of fodder was reported to be generally sufficient.

VIII. **Prices of food-grains.**—During the second fortnight of the month, the retail prices of common rice of the cheapest quality rose in five districts, fell in nine and remained stationary in the rest of the Presidency. The prices varied from 13½ seers per rupee in Midnapore to 9 seers in Faridpur.

IX. **Condition of agricultural population.**—The condition of agricultural population is not satisfactory owing to fall in the prices of jute and other staples. Distress continues to prevail in parts of Nadia, Bogra, Rangpur and Pabna where distribution of agricultural loans and test relief works are being continued.

J. C. Roy,

for *Director of Agriculture, Bengal.*

Statement showing the normal and actual rainfall in each district during June 1931.

Division.	District.	Normal district rainfall for the month of June.	Actual district rainfall for the month of June 1931.	Variation from the normal.	Division.	District.	Normal district rainfall for the month of June.	Actual district rainfall for the month of June 1931.	Variation from the normal.
		Inches.	Inches.	Inches.			Inches.	Inches.	Inches.
Presidency ..	24-Parganas ..	11·57	8·31	−3·26	Rajshahi—*concld.*	Rangpur ..	17·41	14·36	−3·05
	Nadia ..	9·95	9·26	−0·69		Bogra ..	11·92	6·70	−5·22
	Murshidabad ..	10·52	8·64	−1 88		Pabna ..	11·33	11·34	+0·01
	Jessore ..	11·90	7·56	−4·34		Malda ..	10·68	6·09	−4 59
	Khulna ..	13·28	6·91	−6·37					
Burdwan ..	Burdwan ..	10·81	4·90	−5·91	Dacca ..	Dacca ..	14·02	7·85	−6·17
	Birbhum ..	10·65	5·27	−5·38		Mymensingh ..	17·83	13·62	−4·21
	Bankura ..	9·89	4·56	−5·33		Faridpur ..	14·52	6·32	−8·20
	Midnapore ..	11·83	5·47	−6·36		Bakarganj ..	18·38	12·35	−6·03
	Hooghly ..	9·90	6·12	−3·78	Chittagong ..	Chittagong ..	23·11	13·09	−10·02
	Howrah ..	11·73	7·33	−4·40		Tippera ..	16·01	8·45	−7·56
Rajshahi ..	Rajshahi ..	11·30	9·34	−1·96		Noakhali ..	21·28	14·22	−7·06
	Dinajpur ..	14·61	9·19	−5·42		Chittagong Hill Tracts.	19·35	12·10	−7·25
	Jalpaiguri ..	28·25	12·14	−16·11	Cooch Behar ..	.. ..	28·23	35·16	+6·93
	Darjeeling ..	24·39	17·61	−6·78	Tripura State ..	.. ..	15·41	13·54	−1·87

DISTRICT REPORTS ON WEATHER AND CROPS.

For the week ending on the 15th July 1931.

Summary.—During the week the rainfall was generally light to moderate in North and East Bengal while elsewhere it was only light. Weeding of autumn crops is over. Harvesting of autumn paddy and jute continues in the low land tracts of East and North Bengal. Transplantation of winter paddy seedlings is progressing favourably. Condition of standing crops is reported to be satisfactory on the whole. Distress continues in parts of Nadia, Murshidabad, Rangpur, Bogra and Pabna, the number of persons attending the test relief works in the different centres of these districts being 1,467, 703, 63, 73 and 3,239 respectively. The number of persons gratuitously relieved at Rangpur and Bogra was 94 and 75 respectively. The average price of common rice for the Province has risen by about 0·17 per cent. as compared with that of the previous week.

Serial No.	District and subdivision.	Rainfall.	Price of common rice, in seers, per rupee.		Character of the weather, condition of crops, etc.
			This week.	Previous week.	
1	2	3	4	5	6
		Inches.			
1	24-Parganas ..	2·75	9	9¼	Weather seasonable. Condition and prospects of jute are satisfactory. Steeping water is ample. Height of jute plants is six feet in Barrackpore and seven feet in Baraset subdivisions. Height of rivers is normal. Harvesting of jute has not yet commenced. Fodder and water are sufficient.
	Diamond Harbour.	4·20	10½	10½	
	Barrackpore ..	2·13	8½	8½	
	Baraset ..	3·75	9	9	
	Basirhat ..	8·21	9	9	
2	Nadia ..	1·25	9½	9½	Weather seasonable. Prospects of standing crops are good. Distribution of agricultural loans continues. 1,467 persons attended test works in six centres during the week ending on the 11th July.
	Kushtia ..	1·42	10	10	
	Meherpur ..	1·95	8 13/16	8 13/16	
	Chuadanga ..	0·96	10	10	
	Ranaghat ..	1·98	10	10	
3	Murshidabad ..	2·15	11	11	Weather seasonable. Prospects of crops are favourable. Fodder and water are sufficient. 703 persons attended test works on the 11th July in Jellingi thana. Cattle-disease is reported from Suti thana Condition of jute is not very healthy. Steeping water is sufficient. Height of jute plant varies from one foot to five feet. Harvesting of jute has not yet commenced. Height of rivers is the same as last year.
	Lalbagh ..	3·10	10	10	
	Jangipur ..	1·52	11	11	
	Kandi ..	1·40	12	12	
4	Jessore ..	2·74	9	9	Weather seasonable. Prospects of standing crops are good. Jute plants are healthy. No damage. Rainfall normal. Steeping water is not yet ample. Height of jute plants is five feet approximately. Rivers are about two inches higher. Harvesting of jute has not commenced. Sowing of jute and *aus* paddy is over. Fodder and water are sufficient.
	Jhenidah ..	0·29	9	9	
	Magura ..	2·95	9	9	
	Narail ..	4·15	9½	10	
	Bongaon ..	0·65	9½	9½	
5	Khulna ..	1·92	10½	10½	Weather seasonable; its effects on crops are fair. Fodder and water are sufficient. Export and import of rice continue slowly. Cattle-disease is reported from Morrelganj thana. Growth of jute is good. No damage. Steeping water is ample. Rainfall is normal. Height of jute is 4 feet. Harvesting has not commenced.
	Satkhira ..	(n)	(n)	9⅞	
	Bagerhat ..	1·71	8½	8½	

(n) Not reported.

Serial No.	District and subdivision.	Rainfall.	Price of common rice, in seers, per rupee.		Character of the weather, condition of crops, etc.
			This week.	Previous week.	
1	2	3	4	5	6
		Inches.			
6	Burdwan ..	0·80	12	10	Fodder and water are sufficient Jute plants are healthy. No damage. Steeping water is ample. Height of jute plant is 2 feet. Rainfall and and height of rivers are normal. Harvesting has not commenced.
	Asansol ..	3·01	9	9	
	Katwa ..	2·13	12	12	
	Kalna ..	3·70	11	11½	
7	Birbhum ..	3·83	13	12½	Weather seasonable. Cattle-disease is reported from Bolpur thana. Fodder and water are sufficient.
	Rampurhat ..	1·12	12½	12½	
8	Bankura ..	0·15	10½	10 8/16	Weather hot and cloudy. Prospects of standing crops are fair. Fodder and water are sufficient.
	Vishnupur ..	2·92	11¼	11¼	
9	Midnapore ..	4·98	13⅜	13 8/16	Weather seasonable. Fodder and water are sufficient. Jute plants are healthy. Growth is unsatisfactory. Water is insufficient. Height of jute plants is 3 feet.
	Contai ..	1·98	12	11	
	Tamluk ..	2·67	10	10	
	Ghatal ..	3·28	12½	12½	
	Jhargram ..	3·87	11¾	11¾	
10	Hooghly ..	1·15	10	10	Weather seasonable. Transplantation of *aman* paddy continues. Fodder is sufficient. Prospects of jute are fair
	Serampore ..	2·63	10	9¾	
	Arambagh ..	2·27	12½	12½	
11	Howrah ..	2·98	8	8	Weather seasonable; its effects on agricultural operations and to standing crops are favourable. No import or export, Fodder and water are sufficient. Jute plant is healthy. No damage. Steeping water is sufficient. Height of jute plants is 1½ to 3 inches.
	Uluberia ..	7·72	9¾	10¾	
12	Rajshahi (Rampur-Boalia).	2·93	10½	10½	Growth of jute is satisfactory. No damage. Height of jute plants is 4 feet. Harvesting of jute has not yet commenced. Height of rivers is the same as last year. Rainfall is moderate. Fodder and water are sufficient.
	Naogaon ..	(*n*)	(*n*)	12	
	Nator ..	0·70	9⅝	9 11/16	
13	Dinajpur ..	4·30	10½	10½	Weather seasonable; its effects on agricultural operations are favourable. Prospects of standing crops are fair in parts of Nawabganj and Ghoraghat police-stations. Sowing of seedlings of *aman* crops is held up for continued drought. Cattle-disease is reported from Kamarganj police-station. Fodder and water are sufficient. Condition of jute plants is not so healthy. Growth is fair. No damage. Steeping water is insufficient. Height of plants is two-half to three-half cubits. Harvesting of jute has not yet commenced River level is lower. Rainfall is insufficient.
	Thakurgaon ..	2·38	11	12	
	Balurghat ..	1·09	12	12	
14	Jalpaiguri ..	5·30	7	7	Transplantation of *haimanti* paddy has commenced. Weather is not favourable for jute and other *bhadoi* crops. Growth of jute plants is staunted owing to heavy rain. Fodder and water are sufficient.
	Alipur ..	6·02	7	7	
15	Darjeeling ..	7·09	7	7	Potatoes and maize are being harvested. Fodder and water are sufficient. Cattle-disease exists at places. Transplantation of paddy seedlings is going on.
	Kurseong ..	6·42	7	7	
	Siliguri ..	6·91	9	10	
	Kalimpong ..	5·86	7	8	

(*n*) Not reported.

Serial No.	District and subdivision.	Rainfall.	Price of common rice, in seers, per rupee.		Character of the weather, condition of crops, etc.
			This week.	Previous week.	
1	2	3	4	5	6
		Inches.			
16	Rangpur ..	5·55	9	9	Prospects of standing crops are fair. Fodder and water are sufficient. 63 persons attended the test relief works. Number of persons receiving gratuitous relief was 94. Jute plants are fairly healthy. Hail storm has damaged jute in Nilphamari and Gaibandha subdivisions. Harvesting of jute has commenced. Steeping water is ample. Height of jute plants is 4 to 5 feet. River level is lower than last year.
	Nilphamari ..	4·07	11	10½	
	Kurigram ..	6·02	11½	10 11/16	
	Gaibandha ..	5·37	10	10	
17	Bogra ..	4·82	11½	11½	Distress continues in the western part of the district. Agricultural loan for rupees 20,000 is urgently required Test relief works are going on in the affected parts. Number of persons attending the test relief works amounts to 73. Number of persons gratuitously relieved is 75. Condition of jute plants is fair No damage. Steeping water is ample Height of plants is six feet. Height of rivers is 1½ feet lower. Rainfall short. 2-anna crop is harvested.
18	Pabna ..	2·03	9½	9½	Fodder and water are sufficient. Prospects of standing crops and jute are fair. 3,239 persons attended the test relief works during the week ending 11th July 1931. Total amount paid up to date Rs. 29,513-10 only.
	Sirajganj ..	4·04	11	10	
19	Malda ..	0·50	10½	10½	Weather seasonable. Prospects of standing crops are fair. Fodder and water are sufficient. Condition of jute plants is healthy. No damage. Steeping water is ample. Height of jute plants is 3 feet. Harvesting has not commenced Height of river is higher. Rainfall moderate.
20	Cooch Behar ..	4·14	10	11 7/16	Weather seasonable. Transplantation of *haimanti* paddy seedlings and harvesting of autumn paddy are progressing. Fodder is sufficient. Cattle-disease is reported from Sitalkuchi police-station. Cutting and steeping of jute have commenced. Growth is staunted. No damage. Steeping water is sufficient. Height of plants is 3 to 4 cubits. About ¼ anna crop is harvested.
21	Dacca ..	5·08	8½	8½	Rainfall at North Sadar (Kapasia) 7·30. Weather seasonable. Condition of jute and other standing crops is fair. Harvesting of *aus* paddy is nearing completion but that of jute has commenced in the low lands Damage to certain extent to the jute crop due to hail storm during the growth is reported from the Manikganj subdivision. Fodder and water are sufficient.
	Manikganj ..	3·11	9½	9½	
	Narayanganj	4·48	9	9	
	Munshiganj ..	5·11	10	10	
22	Mymensingh ..	7·62	9	9	Weather seasonable. Prospects of standing crops are fair. Fodder and water are adequate. Condition of jute is almost healthy and satisfactory. No damage. Steeping water is ample. Height of jute is 4 to 5 cubits. River level is higher than last year by 9 inches. Rainfall is moderate. 4-anna crop is harvested.
	Jamalpur ..	2·83	10½	10	
	Tangail ..	2·61	9	9	
	Netrakona ..	7·97	11	10	
	Kishorganj ..	5·74	10	10	

Serial No.	District and subdivision.	Rainfall.	Price of common rice, in seers, per rupee.		Character of the weather, condition of crops, etc.
			This week.	Previous week.	
1	2	3	4	5	6
		Inches.			
23	Faridpur ..	2·88	9½	9½	Weather seasonable and favourable. Prospects of standing crops are fair. No large import or export. Fodder and water are sufficient. Growth of jute is not satisfactory. No appreciable damage. Steeping water is not ample. Average height of jute is 4½ feet. Rainfall not excessive. One-anna crop in the lowland tracts is harvested.
	Goalundo (Rajbari).	3·66	9	9	
	Madaripur ..	5·45	10	9½	
	Gopalganj (*a*)	2·51	8½	8½	
24	Bakarganj (Barisal).	4·54	9	9	Weather seasonable. Fodder and water are sufficient. Prospects of standing crops are good.
	Pirojpur ..	2·71	9	9½	
	Patuakhali ..	12·89	10	10	
	Dakshin Shabazpur (Bhola).	3·63	9½	9½	
25	Chittagong ..	3·94	10 11*	10 11*	Weather seasonable. Prospects of standing *aus* crops are favourable. Fodder and water are sufficient. *Panga* salt sells at 16 seers per rupee at Sadar and at 13 seers per rupee at Cox's Bazar.
	Cox's Bazar ..	7·52	9	9	
26	Tippera (Comilla).	7·50	10	10	Growth of jute is satisfactory. Height of jute is 3 to 4 cubits. One-anna crop is harvested.
	Brahmanbaria	1·50	10	10	
	Chandpur ..	3·46	9½	10	
27	Noakhali ..	3·19	10	10	Condition of jute is fair. No damage. Harvesting has not commenced.
	Feni ..	5·86	9	9	
28	Chittagong Hill Tracts.	2·56	13	13	Weather seasonable.
29	Tripura State ..	5·50	9½	9½	Weather seasonable. Fodder and water are sufficient. Cleansed cotton sells at Rs. 6 to Rs. 13 per maund and jute at Rs. 2 to Rs. 5 per maund.

* Burma rice.

(*a*) The rainfall at Harikaspur, which is very near to Gopalganj, is not shown here.

DACCA, *the 18th July 1931.*

J. C. ROY, for *Director of Agriculture, Bengal.*

Statement showing the daily gauge readings of certain rivers at the stations named below for the 3rd July 1931.

Name of river and place where readings are taken.	Hour.	Reading on gauge.	Value of zero referred to P. W. D. datum.	Height above P. W. D. datum.	Compared with previous day's height		Height above P. W. D. datum on same date in—	
					Rise.	Fall.	1930.	1929.
Ganges .. Monghyr	6 a.m. ..	104·70	0·00′	104·70′	0·60′	..	103 40′	109·50′
Ganges .. Rajmahal	6 „ ..	65·30′	—0·12′	65·18′	0·30′	..	63·70′	70·50′
Ganges .. Goalundo	8-54 „ ..	24·00′	1·409′	25·409′	0·30′	..	23 209′	23·709′
Bhagirathi .. Swarupganj	10 a.m. ..	5·40′	0·00′	5 40′	2·37′	..	7·93′	9·01′
Brahmaputra .. Dibrugarh	8 a.m. ..	31·60′	*301·50′	333·10′	..	0·50′	..	339·86′
Brahmaputra .. Gauhati	....	23·50′	136·958′	160·458′	..	0·40′	156·058′	160·758′
Brahmaputra .. Serajganj	12-24 p.m. ..	38·70′	1·509′	40·209′	0·20′	..	39·709′	40 009′
Dhaleswari .. Sabhar	7 a.m. ..	18·30′	0·00′	18·30′	0·20′	..	19·10′	..
Meghna .. Fenchuganj	7 a.m. ..	28·00′	1·509′	29·509′	0·05′	..	32·209	..
Meghna .. Bhairab Bazar	6-24 „ ..	16·33′	1·61′	17·94′	0·42′	..	21·65′	21·28′
Meghna .. Chandpur	7-24 „ ..	10·83′	1·61′	12·44′	Steady.		12·11′	11·28′
Lakhya .. Narayanganj	7 a.m. ..	21·17′	—5·59′	15·58′	0·09′	..	16·24′	15·74′
Madaripur Bil Route .. Takerhat	4-24 p.m. ..	9·50′	0·00′	9·50′	0·20′	..	10·10′	10·00′
Damodar .. Edilpur	6 a.m. ..	7·67′	92·58′	100·25′	7·92′	..	96·08′	96·66′

* Zero of gauge has been altered from 5th June 1931.

Statement showing the daily gauge readings of certain rivers at the stations named below for the 4th July 1931.

Name of river and place where readings are taken.	Hour.	Reading on gauge.	Value of zero referred to P. W. D. datum.	Height above P. W. D. datum.	Compared with previous day's height.		Height above P. W. D. datum on same date in—	
					Rise.	Fall.	1930.	1929.
Ganges .. Monghyr ..	6 a.m. ..	105·50′	0·00′	105·50′	0·80′	..	103·40′	109·50′
Ganges .. Rajmahal ..	6 „ ..	65·70′	−0·12′	65·58′	0·20′	..	63·80′	71·00′
Ganges .. Goalundo ..	8-54 „ ..	24·10′	1·409′	25·509′	0·10′	..	23·409′	24·209′
Bhagirathi .. Swarupganj ..	11 a.m. ..	6·56′	0·00′	6·56′	1·16′	..	7·92′	9·10′
Brahmaputra .. Dibrugarh ..	8 a.m. ..	31·30′	*301·50′	332·80′	..	0·30′	333·00′	..
Brahmaputra .. Gauhati ..	....	22·90′	136·958′	159 858′	..	0·60′	154·958′	161·258′
Brahmaputra .. Serajganj ..	12-24 p.m. ..	38·80′	1·509′	40·309′	0·10′	..	40·109′	40·709′
Dhaleswari .. Sabhar ..	7 a.m. ..	18·90′	0·00′	18·90′	0·60′	..	19·30′	..
Meghna .. Fenchuganj ..	7 a.m. ..	28·00′	1·509′	29·509′	Steady		32·009′	..
Meghna .. Bhairab Bazar ..	6-24 „ ..	16·75′	1·61′	18·36′	0·42′	..	21·65′	21·36′
Meghna .. Chandpur ..	7-40 „ ..	10·92′	1·61′	12·53′	0·08′	..	11·78′	11·28′
Lakhya .. Narayanganj ..	7 a.m. ..	21·33′	−5·59′	15·74′	0·16′	..	16·16′	..
Madaripur Bil Route .. Takerhat ..	4-44 p.m. ..	9·55′	0·00′	9·55′	0·05′	..	10·10′	10·10′
Damodar .. Edilpur ..	6 a.m. ..	9·08′	92·58′	101·66′	1·41′	..	97·16′	96·08′

* Zero of gauge has been altered from 5th June 1931.

Statement showing the daily gauge readings of certain rivers at the stations named below for the 5th July 1931.

Name of river and place where readings are taken.	Hour.	Reading on gauge.	Value of zero referred to P. W. D. datum.	Height above P. W. D. datum.	Compared with previous day's height.		Height above P. W. D. datum on same date in—	
					Rise.	Fall.	1930.	1929.
Ganges .. Monghyr	6 a.m.	104·70′	0·00′	104·70′	..	0·80′	103·80′	109·40′
Ganges .. Rajmahal	6 „	66·10′	—0·12′	65·98′	0·40′	..	63·90′	71·60′
Ganges .. Goalundo	8-54 „	24·20′	1·409′	25·609′	0·10′	..	23·309′	24·809′
Bhagirathi .. Swarupganj	12 noon	7·10′	0·00′	7·10′	0·54′	..	7·27′	9·46′
Brahmaputra .. Dibrugarh	8 a.m	31·60′	*301·50′	333·10′	0·30′	..	333·30′	339·71′
Brahmaputra .. Gauhati	....	22·70′	136·958′	159·658′	0·20′	..	153·958′	162·058′
Brahmaputra .. Serajganj	12-24 p.m.	38·80′	1·509′	40·3.9′	Steady.		39·209′	41·409′
Dhaleswari .. Sabhar	7 a.m.	19·10′	0·00′	19·10′	0·20′	..	19·50′	19·50′
Meghna .. Fenchuganj	7 a.m.	28·00′	1·509′	29·509′	Steady.		31·809′	..
Meghna .. Bhairab Bazar	6-24 „	17·08′	1·61′	18·69′	0·33′	..	21·40′	21·36′
Meghna .. Chandpur	8-30 „	10·92′	1·61′	12·53′	Steady.		11·44′	11·36′
Lakhya .. Narayanganj	7 a.m.	21·30′	—5·59′	15·71′	..	0·03′	15·91′	16·37′
Madaripur Bil Route .. Takerhat	5-4 p.m.	9·70′	0·00′	9·70′	0·15′	..	10·00′	10·30′
Damodar .. Edilpur	6 a.m.	10·42′	92·58′	103·09′	1·34′	..	97·58′	97·70′

* Zero of gauge has been altered from 5th June 1931.

Statement showing the daily gauge readings of certain rivers at the stations named below for the 6th July 1931.

Name of river and place where readings are taken.	Hour.	Reading on gauge.	Value of zero referred to P. W. D. datum.	Height above P.W.D. datum.	Compared with previous day's height.		Height above P. W. D. datum on same date in—	
					Rise.	Fall.	1930.	1929.
Ganges .. Monghyr ..	6 a.m. ..	106 60′	0·00′	106·60′	1·90′	..	104·50′	110·30′
Ganges .. Rajmahal ..	6 „ ..	66·60′	—0·12′	66 48′	0·50′	..	64·10′	72·10′
Ganges .. Goalundo ..	8-54 „ ..	24·20′	1·409′	25·609′	Steady.		22·809′	25·109′
Bhagirathi .. Swarupganj ..	12 noon ..	9·12′	0·00′	9·12′	2·02′	..	7·23′	10·34′
Brahmaputra .. Dibrugarh ..	8 a.m. ..	32·50′	*301·50′	334·00′	0·90′	..	333·50′	338·76′
Brahmaputra .. Gauhati ..	....	22 10′	136·958′	159·058′	..	0·60′	153·958′	162·258′
Brahmaputra .. Sirajganj ..	12-24 p.m. ..	38·70′	1·509′	40·209′	..	0·10′	38·409′	41·609′
Dhaleswari .. Sabhar ..	7 a.m. ..	19·30′	0·00′	19·30′	0·20′	..	19·60′	19·80′
Meghna .. Fenchuganj ..	7 a.m. ..	27·90′	1·509′	29·409′	..	0·10′	31·609′	..
Meghna .. Bhairab Bazar ..	6-24 „ ..	17·87′	1·61′	19 48′	0·79′	..	21·32′	21·44′
Meghna .. Chandpur ..	9-25 „ ..	10·50′	1·61′	12·11′	..	0·42′	10·28′	11·61′
Lakhya .. Narayanganj ..	7 a.m. ..	21·25′	—5·59′	15·66′	..	0·05′	15·74′	17·16′
Madaripur Bil Route .. Takerhat ..	5-14 p.m. ..	9·75′	0·00′	9·75′	0·05′	..	9·95′	10·95′
Damodar .. Edilpur ..	6 a.m. ..	7·50′	92·58′	100 08′	..	2·92′	97·83′	98·2.′

* Zero of gauge has been altered from 5th June 1931.

Statement showing the daily gauge readings of certain rivers at the stations named below for the 7th July 1931.

Name of river and place where readings are taken.	Hour.	Reading on gauge.	Value of zero referred to P.W.D. datum.	Height above P. W. D. datum.	Compared with previous day's height.		Height above P. W. D. datum on same date in—	
					Rise.	Fall.	1930.	1929.
Ganges .. Monghyr ..	6 a.m. ..	108·70′	0·00′	108·70′	2·10′	..	105·40′	112·20′
Ganges .. Rajmahal ..	6 „ ..	67·00′	−0·12′	66·88′	0·40′	..	64·60′	72·92′
Ganges .. Goalundo ..	8-54 „ ..	24·10′	1·409′	25·509′	..	0·10′	22·409′	26·009′
Bhagirathi .. Swarupganj ..	1 p.m. ..	8·97′	0·00′	8·97′	..	0·15′	7·32′	11·70′
Brahmaputra .. Dibrugarh ..	8 a.m. ..	32·90′	*301·50′	334·40′	0·40′	..	334·80′	338·21′
Brahmaputra .. Gauhati ..	....	22·00′	136·958′	158·958′	..	0·10′	155·458′	162·658′
Brahmaputra .. Serajganj ..	12-24 p.m. ..	38·50′	1·509′	40·009′	..	0·20′	38·109′	41·709′
Dhaleswari .. Sabhar ..	7 a.m. ..	19·40′	0·00′	19·40′	0·10′	..	19·50′	20·20′
Meghna .. Fenchuganj ..	7 a.m. ..	27·85′	1·509′	29·359′	..	0·05*	31·409′	..
Meghna .. Bhairab Bazar ..	6-24 „ ..	18·08′	1·61′	19·69′	0·21′	..	21·32′	21·36′
Meghna .. Chandpur ..	10-30 ..	10·25′	1·61′	11·86′	..	0·25′	10·44′	12·11′
Lakhya .. Narayanganj ..	7 a.m. ..	21·33′	−5·59′	15·74′	0·08′	..	15·78′	16·99′
Madaripur Bil Route .. Takerhat ..	5-44 p.m. ..	9·85′	0·00′	9·85′	0·10′	..	9·95	11·10′
Damodar .. Edilpur ..	6 a.m. ..	6·33′	92·58′	98·91′	..	1·17′	97·83′	98·16′

* Zero of gauge has been altered from 5th June 1931.

Statement showing the daily gauge readings of certain rivers at the stations named below for the 8th July 1931.

Name of river and place where readings are taken.	Hour.	Reading on gauge.	Value of zero referred to P. W. D. datum.	Height above P. W. D. datum.	Compared with previous day's height.		Height above P. W. D. datum on same date in —	
					Rise.	Fall.	1930.	1929.
Ganges .. Monghyr	6 a.m.	109·00′	0·00′	109·00′	0·30′	..	106·40′	113·20′
Ganges .. Rajmahal	6 „	68·20′	−0·12′	68·08′	1·20′	..	65·10′	73·32′
Ganges .. Goalundo	8-54 „	24·10′	1·409′	25·509′	Steady.		22·109′	26·209′
Bhagirathi .. Swarupganj	2 p.m.	8·29′	0·00′	8·29′	..	0·68′	7·42′	12·51′
Brahmaputra .. Dibrugarh	8 a.m.	33·50′	*301·50′	335·00′	0·60′	..	334·90′	338·06′
Brahmaputra .. Gauhati	....	21·80′	136·958′	158·758′	..	0·20′	155·558′	162·858′
Brahmaputra .. Serajganj	12-24 p.m.	38·50′	1·509′	40·009′	Steady.		38·309′	41·609′
Dhaleswari .. Sabhar	7 a.m.	19·50′	0·00′	19·50′	0·10′	..	19·40′	20·40′
Meghna .. Fenchuganj	7 a.m.	27·70′	1·509′	29·209′	..	0·15′	31·209′	..
Meghna .. Bhairab Bazar	6-24 „	18·08′	1·61′	19·69′	Steady.		21·32′	21·44′
Meghna .. Chandpur	11-15 „	10·17′	1·61′	11·78′	..	0·08′	10·53′	12·61′
Lakhya .. Narayanganj	7 a.m.	21·25′	−5·59′	15·66′	..	0·08′	15·76′	17·20′
Madaripur Bil Route .. Takerhat	6-24 a.m.	9·85′	0·00′	9·85′	Steady.		9·90′	11·20′
Damodar .. Edilpur	6 a.m.	5·00′	92·58′	97·58′	..	1·33′	99·66′	97·91′

*Zero of gauge has been altered from 5th June 1931.

Statement showing the daily gauge readings of certain rivers at the stations named below for the 9th July 1931.

Name of river and place where readings are taken.	Hour.	Reading on gauge.	Value of zero referred to P. W. D. datum.	Height above P. W. D. datum.	Compared with previous day's height.		Height above P. W. D. datum on same date in—	
					Rise.	Fall.	1930.	1929.
Ganges .. Monghyr ..	6 a.m. ..	109·00′	0·00′	109·00′	Steady.		107·30′	113·60′
Ganges .. Rajmahal ..	6 „ ..	69·20′	—0·12′	69 08′	1·00′	..	67·50′	74·60′
Ganges .. Goalundo ..	8-54 „ ..	24·10′	1·409′	25·509′	Steady.		22·109′	26·309′
Bhagirathi .. Swarupganj ..	6 a.m. ..	7·69′	0·00′	7 69′	0·60′	0·60′	9·16′	13·15′
Brahmaputra .. Dibrugarh ..	8 a.m. ..	36·40′	*301·50′	337·90′	2·90′	..	333·80′	337·26′
Brahmaputra .. Gauhati ..	....	22·40′	136·958′	159·358′	0·60′	..	154·958′	162·758′
Brahmaputra .. Serajganj ..	12-24 p m. ..	38·50′	1·509′	40·009′	Steady.		38·309′	41·809′
Dhaleswari .. Sabhar ..	7 a.m. ..	19·60′	0·00′	19·60′	0·10′	..	19·30′	20·80′
Meghna .. Fenchuganj ..	7 a.m. ..	27·60′	1·509′	29·109′	..	0·10′	30·959′	..
Meghna .. Bhairab Bazar ..	6-24 „ ..	18·08′	1·61′	19·69′	Steady.		21·23′	21·44′
Meghna .. Chandpur ..	12 noon ..	10·00′	1·61′	11·61′	..	0·17′	11·19′	12·78′
Lakhya .. Narayanganj ..	7 a.m. ..	21·33′	—5·59′	15·74′	0·08′	..	15·74′	17·39′
Madaripur Bil Route .. Takerhat ..	6-45 „ ..	9·90′	0·00′	9·90′	0·05′	..	10·00′	11·40′
Damodar .. Edilpur ..	6 „ ..	4·92′	92·58′	97·50′	* ..	0·08′	106·66′	101·25′

* Zero of gauge has been altered from 5th June 1931.

Statement of weekly gauge readings on the river Ganges at Rampur Boalia for the week ending the 11th July 1931.

Date.	Hour.	Height of surface above zero of gauge.	Height of surface above P. W. D. datum.	Height of surface above P. W. D. datum on the same date of last year.	Remarks.
1931.					
5th July ..	7 a.m.	....	42·30	41·20	Value of zero = 0·00 P. W. D.
6th „ ..	7 „	....	42·70	41·35	
7th „ ..	7 „	....	43·10	41·50	Zero of gauge referred to B. M. on Rajshahi College step; value 64·73.
8th „ ..	7 „	....	43·65	42·20	
9th „ ..	7 „	....	44·55	43·50	
10th „ ..	7 „	....	45·30	44·80	
11th „ ..	7 „	....	45·75	45·70	

Highest recorded level on 26-8-1879=64·24.

Lowest recorded level on 25-4-1884=32·62.

P. C. Basu, *Subdivisional Officer,*
Irrigation Department, Rajshahi.

Rampur Boalia, *the 12th July 1931.*

Statement showing the gauge readings at Dacca Waterworks on the river Buriganga for the week ending 11th July 1931.

Date.	At highest water.		At lowest water.		Commencement of—		Remarks.	
	Time.	Reading.	Time.	Reading.	Ebb tide.	Flow tide.	At 7 a.m.	At 5 p.m.
1931.								
5th July ..	Tide is not perceptible.						14·75	14·8
6th „ ..							14·8	14·8
7th „ ..							14·8	14·8
8th „ ..							14·85	14·9
9th „ ..							15·0	15 0
10th „ ..							15·1	15·15
11th „ ..							15·3	15 4

B. M. on settling tank 39·49 O. M. S. L. Zero is at O. M. S. L.

Notable high and low water-levels of previous years.

		Taken at high tide.				Taken at low tide.
27th August	1906 ..	70·5		23rd February	1907 ..	51·06
5th September	1909 ..	66·86		13th „	1908 ..	51·06
10th August	1910 ..	69·86		12th March	1912 ..	51·06
1st „	1911 ..	68·46		6th „	1914 ..	50·60
13th „	1912 ..	67·16		22nd February	1915 ..	50·30
31st „	1915 ..	69·7		15th „	1916 ..	50·60
8th „	1916 ..	68·1		3rd March	1917 ..	51·0
12th „	1917 ..	67·1		21st February	1918 ..	51·40
13th „	1918 ..	69·12		26th „	1919 ..	50·4
2nd „	1919 ..	66·8		18th „	1920 ..	50·9
8th September	1920 ..	66·9		19th „	1921 ..	50·9
28th July	1921 ..	68·4		8th March	1922 ..	51·05
10th August	1922 ..	68·00		14th „	1923 ..	50·8
31st July	1923 ..	66·15		16th February	1924 ..	50·50
29th August	1924 ..	68·82		5th March	1925 ..	50·9
8th September	1925 ..	68·52		9th February	1926 ..	2·2
15th August	1926 ..	19·6		27th „	1927 ..	2·10
17th September	1927 ..	18·70		16th „	1928 ..	2·2
22nd August	1928 ..	20·0		21st „	1929 ..	2·0
13th July	1929 ..	17·8		24th „	1930 ..	2 3
12th September	1930 ..	18·65				

N. B.—Zero of the gauge at Dacca Waterworks prior to 11 a.m. on the 8th January 1926= −48·51 with reference to P. W. D. datum.

Zero of the gauge at Dacca Waterworks since 11 p.m. on the 8th January 1926=0·00 with reference to P. W. D. datum.

[ILLEGIBLE], for *Executive Engineer,*
Khulna Division.

KHULNA, *the 16th July 1931.*

Resolution on the Annual Report of the Bengal Smoke Nuisances Commission for the year 1930.

GOVERNMENT OF BENGAL.

Commerce Department.

CALCUTTA, THE 16TH JULY 1931.

RESOLUTION —No. 3425Com.

Read—

The Annual Report of the Bengal Smoke Nuisances Commission for the year 1930.

The report records another year's steady progress in the removal of smoke from the air of Calcutta and its immediate environs. During the year a 27 per cent. reduction of daily black smoke was brought about by the efforts of the Commission. The average emission from each factory chimney during the previous year was the equivalent of ·3 minutes of dense black smoke per hour; during the year under report it was reduced to ·18 minutes, which is by far the lowest recorded figure so far. The progress recorded during the year was all the more satisfactory in view of the fact that it was achieved during a period of abnormal trade depression, when manufacturers were not unnaturally hesitant in undertaking new commitments. The Governor in Council notes with pleasure the successful action of the Commission in aiding rice-husking mills and brickfields. The progress achieved in each of these cases during the year under report has been particularly noteworthy and reflects great credit on the Commission and its technical staff.

2. Unfortunately, owing to financial stringency, Government have not been able to give effect to several recommendations made to them by the Commission, particularly with respect to the appointment of smoke observers and to the provision of further finance. The proposals made by the Commission have been sympathetically received, but their fulfilment, like that of many other proposals, must await better times.

3. The Governor in Council, in thanking the Commission for its useful work, desires particularly to mention the work of Mr. John Robson, who has been Chief Inspector and Secretary of the Commission for twenty-five years, and who is due to retire this year. The measure of his service to the public of Calcutta may be judged from the remark in the report under review, namely, that while in 1906 the daily emission of black smoke was about 2,00,000 minutes, at the end of 1930 it had dropped to under 2,000 minutes. Mr. Robson's services have been retained several years beyond the normal time limit of retirement for Government servants, but Government have now decided to release him at his own request. In losing him the local Government and the public served by the Bengal Smoke Nuisances Commission lose an expert and enthusiastic officer, and the Governor in Council wishes to place on record his high appreciation of his long and valuable service.

Order—Ordered that the resolution be published in the *Calcutta Gazette*.

Ordered also that a copy of the resolution be forwarded to the Chief Inspector and Secretary, Bengal Smoke Nuisances Commission, for information.

By order of the Governor in Council,

E N BLANDY,
Secy. to the Govt. of Bengal.

Resolution on the Report on the Police Administration in the town of Calcutta and its suburbs for the year 1930.

GOVERNMENT OF BENGAL.

Police Department.

CALCUTTA, THE 18TH JULY, 1931.

RESOLUTION—No. 3144 Pl.

Read—

The Report on the Police Administration in the town of Calcutta and its suburbs for the year 1930.

The office of the Commissioner of Police was held throughout the year by Sir Charles Tegart, Kt., C.S.I., C.I.E., M.V.O.

2. **Strength.**—The sanctioned strength of the Calcutta Police at the close of the year was 5,747, a decrease of 3 on the previous year. The number of resignations during the year was 51 as against 46 in the preceding year. There was, however, a decrease of 13 in the number of vacancies at the end of the year, and the Governor in Council notes with satisfaction that the increased rate of pay in the rank of constable has given a stimulus to recruitment and enabled a better type of recruit to be secured. His Excellency in Council is pleased to see that the improvement in the health of the force has been maintained in spite of the great strain placed on all ranks by the civil disobedience movement.

3. **Housing.**—His Excellency in Council is alive to the need of improved police accommodation in the suburban areas, and regrets that it has not yet been possible to take this work in hand owing to severe financial stringency.

4. **Discipline.**—His Excellency in Council has noticed with pleasure the large decrease in the number of judicial punishments inflicted on members of the force and also in the number of dismissals and degradations.

5. **Crime Statistics.**—There was a substantial fall in the total number of cognizable cases reported to the police, but a great increase in the number of rioting cases, a fact which is to be ascribed to the civil disobedience movement. The same increase is found in the figures of other crimes of violence which, as the Commissioner of Police points out, have a tendency to be more prevalent during periods of excitement or civil commotion. As against this, it is satisfactory to note that the number of true cases of burglary, theft and receiving stolen property showed a marked decrease. The effects of the civil disobedience campaign are reflected in an increase of 50 per cent. over the previous year in the number of persons detained in police lock-ups, 21,085 as against 14,239.

The Detective Department was as usual engaged in tracing out various fraudulent activities and attained very successful results. The activities of a number of swindling agencies under the guise of banks have already been brought to the notice of His Excellency in Council and the matter is engaging his attention.

6. **Revolutionary crime, seditious speeches and writings.**—The terrorist party made itself felt by a series of political outrages which began in August with the attempt to assassinate the Commissioner of Police. Fortunately this was unsuccessful and His Excellency in Council takes this opportunity to congratulate Sir Charles Tegart on his providential escape. Shortly after this incident, bombs were thrown on the Jorabagan Court building and the roof of the Eden Garden outpost, causing injuries to a number of people, one of whom died. This was followed in December by the cowardly murder of Lt.-Col. Simpson, the Inspector-General of Prisons, in his office in Writers' Buildings.

As a result of investigations in connection with the first three outrages, a terrorist conspiracy was unearthed and 13 Bengalis were sent up for trial, 8 of them being convicted and sentenced to terms ranging from transportation for 20 years to 10 years' rigorous imprisonment.

Throughout the civil disobedience movement, the Congress had the vigorous support of the Indian Press,

practically the whole of which devoted itself to the spread of an anti-Government propaganda as false as it was sensational. The number of prosecutions for seditious speeches was inevitably high, while two persons were convicted of attempts to tamper with the loyalty of the police. Prosecutions were instituted in a number of cases under sections 124A and 153A of the Indian Penal Code, and there was a large increase in the number of publications which it was found necessary to proscribe under section 99A of the Criminal Procedure Code. When, with the promulgation of the Indian Press Ordinance, it became possible to demand security from the keepers of printing presses and printers and publishers of newspapers, the Congress resorted to the publication of unauthorised newssheets, bulletins, leaflets and pamphlets which were met by the institution of numerous prosecutions under the Press and Registration of Books Act, the Police Act, the Picketing Ordinance and various sections of the Indian Penal Code.

7. **Public Order.**—The situation resulting from the civil disobedience movement and the activities of the terrorists subjected the Calcutta Police to the heaviest strain the force has yet had to bear. Street rioting—of which the most serious was that of 15th April in Bhowanipore when tramcars were set on fire, officers and men of the Fire Brigade injured and fire engines damaged—hartals, unlawful processions and meetings, and picketing combined with intimidation and violence, entailed long and harassing hours of duty and were a severe test of the fortitude of the force. Insidious attempts were made to tamper with the loyalty of the Indian ranks, but this did not deflect them from their duty, and all ranks faced the situation and performed the difficult task of maintaining order with an alacrity and cheerfulness, and a patience and restraint which do the highest credit to the force. His Excellency in Council takes this opportunity to place on record his high appreciation of the loyalty, courage and devotion to duty of all ranks during one of the most trying periods in the history of the Calcutta Police.

8. **Labour.**—There was a great deal of labour unrest during the year, but His Excellency in Council is glad to be able to record that there was only one occasion on which the situation became serious, when, on April 1st, the resentment felt by the carters and transport workers at the enforcement of certain rules made under the Bengal Cruelty to Animals Act (Bengal Act I of 1920) culminated in fierce rioting on Howrah bridge and the neighbourhood, in the course of which the police had several times to fire. The situation was competently and resolutely handled and brought under control without delay. There were eight industrial strikes during the year.

9. **Traffic.**—His Excellency in Council is pleased to notice the many improvements effected in the working of the Motor Vehicles Department, particularly the arrangements made to expedite the issue of licences and registration certificates, the introduction of the English system of the Public Service Vehicles licence, and the measures taken to deal with the "horn nuisance." He trusts that it may be found possible at an early date to effect further improvements in connection with other nuisances which still persist. His Excellency in Council is concerned to see that over two thousand cases under the Motor Vehicles Act were pending at the close of the year, and trusts that every effort will be made to deal with these cases as expeditiously as possible. He regrets that the proposal to form a "Traffic Bureau" cannot be proceeded with at present owing to the financial situation. In the meantime the question of amending the Motor Vehicles Act to provide for the composition of offences is engaging the attention of the Government of India.

10 **Commendation of officers.**—His Excellency in Council is gratified to read the tributes paid by Sir Charles Tegart to his Deputy Commissioners, Assistant Commissioners and other subordinate officers. In congratulating the Commissioner of Police on the efficiency and fine sense of duty displayed by the whole force during a year of unprecedented strain, he wishes to place on record his deep appreciation of the signal services that the officers and men of the Calcutta Police rendered to the State in combating a movement whose aim was the subversion of law and order and good government. He would add that the implicit confidence in the ability

and courage of Sir Charles Tegart himself which was felt not only by his subordinates but by the citizens of Calcutta generally contributed in no small degree to the success with which the stormy days of 1930 were weathered. In this commendation the Governor in Council would wish to include the members of the Special Constabulary who, though actually mobilised on only one occasion, constituted a very valuable potential support to the police in times of emergency.

Order—Ordered that a copy of this resolution be forwarded to the Commissioner of Police, Calcutta, the Chief Presidency Magistrate, Calcutta, and the Commissioner of the Presidency Division, for information.

Ordered also that a copy of the report be submitted to the Government of India in the Home Department.

Ordered also that the resolution be published in the *Calcutta Gazette*.

By order of the Governor in Council,

R. N. REID,

Chief Secy. to the Govt. of Bengal (*offg.*).

Printed at the Bengal Government Press, Alipore, and published by the Bengal Secretariat Book Depot, Writers' Buildings, in the City of Calcutta, on the 23rd July 1931.

Registered No. C207

The Calcutta Gazette

Extraordinary

WEDNESDAY, JULY 29, 1931.

GOVERNMENT OF BENGAL.

Appointment Department.

CALCUTTA, THE 29TH JULY 1931.

RESOLUTION—No. 6826A.

The Governor in Council regrets to have to record another senseless crime through which Mr. R. R. Garlick, I.C.S., District Judge of the 24-Parganas, lost his life at the hand of an assassin. Mr. Garlick was shot while at work in his Court at Alipore on the 27th of July.

Mr. Garlick, who was a little over 55 years of age, came out to India in 1900, and with the exception of two years as Subdivisional Officer of Samastipur in Bihar, spent the whole of his service in Bengal. He elected the Judicial branch of the Service and was employed on judicial work in various districts practically continuously from 1909 until the day of his death. During the last twelve months he was selected to preside over several Special Tribunals convened to try cases in which the revolutionaries were concerned, and it is undoubtedly on this account that he was marked down for assassination.

A man of retiring nature, he devoted himself to his work with remarkable industry and discharged his judicial duties with great ability and without fear or favour. By his death the Government of Bengal have lost a zealous and an upright Judge and a devoted public servant. To his widow and his children who survive him the Governor in Council desires to extend a sincere expression of his sympathy.

By order of the Governor in Council,

R. N. REID,
Chief Secy. to the Govt. of Bengal (offg.).

Printed at the Bengal Government Press, Alipore, and published by the Bengal Secretariat Book Depot, Writers' Buildings, in the City of Calcutta, on the 29th July 1931.

Registered No. C207 *No. 31 of 1931*

BENGAL SECRETARIAT LIBRARY

The Calcutta Gazette

THURSDAY, JULY 30, 1931.

CONTENTS:

	PAGE.		PAGE.
PART I.—Orders and Notifications by the Governor of Bengal, the Government of Bengal, the High Court, Government Treasury, etc.	895—907	PART V.—Acts of the Indian Legislature assented to by the Governor General and Ordinances promulgated under section 72 of the Government of India Act ..	*Nil*
PART IA.—Orders and Notifications by the Government of India republished for general information	211—219	PART VI.—Bills introduced in the Council of State and Legislative Assembly, Reports of Select Committees presented to the Council and Assembly and Bills published under Rule 18 of the Indian Legislative Rules	*Nil*
PART IB.—Educational Notices ..	817—821		
PART II.—Advertisements	685—692		
PART III.—Acts of the Bengal Legislative Council	*Nil*	SUPPLEMENT No. 31— Cotton Ginning and Pressing—Weekly Vital Statistics—Weekly gauge-readings Weekly Weather and Crop Report—Prices-current—Daily gauge-readings	991—1009
PART IV.—Bills introduced in the Bengal Legislative Council, Reports of Select Committees presented or to be presented to that Council, and Bills published before introduction in that Council ..	*Nil*		

Part I

Orders and Notifications by the Governor of Bengal, the Government of Bengal, the High Court, Government Treasury, etc.

ORDERS BY HIS EXCELLENCY THE GOVERNOR OF BENGAL.

Tour Programme of His Excellency the Governor of Bengal during August 1931.

Government House, Calcutta, the 24th July 1931.

His Excellency the Governor of Bengal will leave Calcutta on the evening of Sunday, the 2nd August, and will arrive at Dacca on the following afternoon. He will again leave Dacca on the morning of the 17th idem and arrive at Calcutta on the next morning. His Excellency's departure from Dacca will be public. All other arrivals and departures will be private.

The party accompanying His Excellency will be—

The Hon'ble Lady Jackson.
J. D. Tyson, Esq., I.C.S., Private Secretary.
Lieut.-Colonel W. A. K. Fraser, C.B.E., D.S.O., M.V.O., M.C., Military Secretary.
Major H. Hingston, I.M.S., Surgeon.
Captain J. V. Gordon, Aide-de-Camp.
Captain J. F. Ross, Aide-de-Camp.
Captain A. C. Maynard, Aide-de-Camp.
Captain J. F. Milburne, Aide-de-Camp.

All communications intended to reach His Excellency and party should be addressed to Governor's Camp, Bengal, *without the addition of any post town.*

W. A. K. FRASER, LIEUT.-COLONEL,
Mily. Secy. to H. E. the Governor of Bengal.

ORDERS BY THE GOVERNMENT OF BENGAL.

No. 6210A.

Appointments and Transfers.

GENERAL.

Birbhum-Midnapore.—No. 6048A. — 20th July 1931. Mr. Sudhansu Kumar Haldar, I.C.S., Joint Magistrate and Deputy Collector, Rampurhat, Birbhum, is transferred temporarily to the headquarters station of the Midnapore district.

Bankura-Rajshahi.—No. 6050A.—20th July 1931.—Mr. Annada Sankar Ray, I.C.S., Assistant Magistrate and Collector, Bankura, is appointed to have charge of the Naogaon subdivision of the Rajshahi district.

This cancels the orders contained in notification No. 5715A., dated the 9th July 1931, appointing him to have charge of the Vishnupur subdivision of the Bankura district.

Hooghly-Mymensingh.—No. 6095A.—22nd July 1931.—Mr. Motiram Khusiram Kirpalani, I.C.S., Joint Magistrate and Deputy Collector, Serampore, Hooghly, is transferred to the headquarters station of the Mymensingh district.

Mymensingh-Jessore.—No. 6098A.—22nd July 1931.—Mr. Rabindra Kumar Mitra, I.C.S., Assistant Magistrate and Collector, Mymensingh, is appointed to have charge of the Narail subdivision of the Jessore district.

Chittagong Divn.—No. 6129A. — 23rd July 1931.—Maulvi Muhammad Ali Husain Bhuiyan, Sub-Deputy Collector, on leave, is posted to the Chittagong Division.

Jalpaiguri-Bakarganj.—No. 6145A. — 24th July 1931.—The orders of the 16th July 1931, transferring Babu Bishnupada Bhattacharji, Deputy Magistrate and Deputy Collector, Jalpaiguri, to the Pirojpur subdivision of the Bakarganj district, are cancelled.

Midnapore-Bakarganj.—No. 6158A. — 24th July 1931.—Babu Binay Bhusan Das Gupta, Deputy Magistrate and Deputy Collector, Midnapore, is transferred to the Pirojpur subdivision of the Bakarganj district.

Jessore-Chittagong. — No. 6161A. — 24th July 1931.—Babu Surendra Mohan Bhaumik, Deputy Magistrate and Deputy Collector, Narail, Jessore, is transferred to the headquarters station of the Chittagong district.

Chittagong-Howrah. — No. 6164A. — 24th July 1931.—Babu Jogendra Lal Nandi, Deputy Magistrate and Deputy Collector, Chittagong, is transferred to the headquarters station of the Howrah district

Rajshahi-Midnapore.—No. 6167A. — 24th July 1931.—Babu Girija Bhusan Ghoshal, Deputy Magistrate and Deputy Collector, Naogaon, Rajshahi, is transferred to the headquarters station of the Midnapore district.

24-Parganas.—No. 6170A.—24th July 1931. —Babu Sukesh Chandra Deb Ray, Deputy Magistrate and Deputy Collector, on leave, is posted to the headquarters station of the 24-Parganas district.

POLICE.

Rajshahi-Faridpur-Hooghly.—No. 6006A.—20th July 1931. The Probationary Assistant Superintendents of Police, named below, are posted to the headquarters station of the districts noted against their names, on the termination of their training at the Police Training College, Sardah, Rajshahi:—

Mr. Pershotam Lal Mehta ... Faridpur.
Mr. Muhammad Aboo Abdullah Hooghly.

Calcutta.—No. 6084A. 22nd July 1931.—Babu Provat Nath Mukharji (No. 1), an Inspector of the Calcutta Police, was appointed to act as an Assistant Commissioner of Police, Calcutta, *vice* Babu Saktipada Chakrabatti, granted leave.

ECCLESIASTICAL.

Calcutta.—No. 6060A.—21st July 1931.—In exercise of the powers conferred on him by section 3 of Act V (B.C.) of 1881, the Governor in Council is pleased to appoint Reverend Herbert Anderson as a member of the Christian Burial Board for the town and suburbs of Calcutta.

Confirmation.

GENERAL.

No. 6076A.—22nd July 1931.—Mr. J. B. Kindersley, I.C.S., officiating Director of Land Records, Bengal, is confirmed in that appointment.

POLICE.

No. 6088A.—22nd July 1931.—The officiating Deputy Superintendents of Police, named below, are confirmed in the Bengal Police Service, with effect from the date mentioned against each:—

Rai Sahib Anath Bandhu Chakrabatti—16th June 1931.
Mr. E. S. Jones—1st July 1931.

Dacca.—No. 6132A.—23rd July 1931.—Lt.-Col. E. D. Dallas-Smith, officiating Commandant, Eastern Frontier Rifles (Bengal Battalion), Dacca, is confirmed in that appointment, with effect from the 7th May 1931, *vice* Lt.-Col. D. I. Macpherson, O.B.E., retired.

Leave.

GENERAL.

No. 6004A.—20th July 1931.—Babu Sisir Kumar Har, Sub-Deputy Collector, is allowed leave on average pay for six weeks, under rule 81 (*b*) (*ii*) of the Fundamental Rules, in extension of the leave granted to him under the orders of the 18th May 1931.

Rajshahi.—No. 6062A.—21st July 1931.—The orders of the 18th June 1931, granting leave to Babu Suresh Chandra Ghosh (II), Sub-Deputy Collector, Nator, Rajshahi, are cancelled.

No. 6126A.—23rd July 1931.—Babu Sailesh Chandra Chaudhuri, Sub-Deputy Collector, is allowed leave on average pay, under rule 81 (*b*) (*ii*) of the Fundamental Rules, from the 1st September 1931, or any subsequent date on which he may be relieved of his duties in the Settlement Department, up to the 30th November 1931.

No. 6135A.—23rd July 1931.—Maulvi Ibrahim Ali Khan, Sub-Deputy Collector, is allowed leave on average pay for one month and twenty days, under rule 81 (*b*) (*ii*) of the Fundamental Rules, in extension of the leave granted to him under the orders of the 31st May 1931.

POLICE.

Dacca.—No. 6064A.—21st July 1931.—Lieutenant-Colonel D. I. Macpherson, O.B.E., Commandant, Eastern Frontier Rifles (Bengal Battalion), Dacca, has been granted by the High Commissioner for India an extension of leave on average pay for one month and six days.

Calcutta.—No. 6081A.—22nd July 1931.—Babu Saktipada Chakrabatti, an Assistant Commissioner of Police, Calcutta, was allowed leave on average pay for three weeks, under rule 81 (*b*) (*ii*) of the Fundamental Rules, with effect from the 2nd July 1931

R. N. REID,
Chief Secy. to the Govt. of Bengal (offg.).

POLITICAL DEPARTMENT.

Political.

NOTIFICATIONS.

No. 12049P.—22nd July 1931.—In exercise of the power conferred by section 99A of the Code of Criminal Procedure, 1898 (Act V of 1898), the Governor in Council hereby declares to be forfeited to His Majesty all copies, wherever found, of a pamphlet in Bengali entitled "Bilati Bastra Barjan Kariba Kena" by Jnananjan Neogi, printed and published by Brojendra Nath Bhadra at the Service Printing Company, 20A, Gopi Bose Lane, Calcutta, on the ground that the said pamphlet contains matter which promotes or attempts to promote feelings of enmity or hatred between different classes of His Majesty's subjects, the publication of which is punishable under section 153A of the Indian Penal Code.

No. 12194P.—23rd July 1931.—In exercise of the power conferred by section 99A of the Code of Criminal Procedure, 1898 (Act V of 1898), the Governor in Council hereby declares to be forfeited to His Majesty all copies, wherever found, of the following pictures, on the ground that the said pictures contain matters which bring or attempt to bring into hatred or contempt and excite or attempt to excite disaffection towards the Government established by law in British India, the publication of which is punishable under section 124A of the Indian Penal Code:—

(1) Group of Sukdev, Rajguru and Bhagat Singh handcuffed, fettered and led towards the gallows by a Jail Superintendent with inscription "Going to be hanged with pleasure"—printed by Arorbans Press, blockmakers and printers, and published by the Punjab Dharmik Manufacturing Company, Anarkali, Lahore.

(2) Group of Lahore Conspiracy Case prisoners with inscription "Lahore Conspiracy Case Decision" and final orders passed against each prisoner—printed by Arorbans Press, blockmakers and printers, Anarkali, Lahore.

(3) One picture entitled "Sahidadi Arati" in Urdu showing chains of Mother India being broken at the sacrifice of Sukdev, Rajguru and Bhagat Singh while she is performing *Arati*. The souls of these martyrs are shown proceeding heavenwards in the direction of Jatin Das—printed by Mehta Art Press and Blockmakers Mehta Half-tone Company, Anarkali, Lahore, and published by Brij Lal Artist, Nisbat Road, Lahore.

(4) One picture entitled "Mother's stabbed heart" showing a big stab wound on the chest of Mother India who is bleeding profusely. Three martyrs Sukdev, Rajguru and Bhagat Singh are shown inside the wound. Blood falling from the wound kindles a fire below—printed at Ravi Fine Art Printing Works, Anarkali, Lahore, and published by Poor Friends' Society, 6, Goalmundi, Lahore.

(5) Group of Bhagat Singh, Rajguru and Sukdev with inscription "Mr. Bhagat Singh, Rajguru and Sukdev hearing the sentence of hanging with pleasure"—printed by Arorbans Press, blockmakers and printers, Anarkali, Lahore.

No. 12260P.—23rd July 1931.—Whereas the magic lantern slides described below appear to the Governor in Council to contain matter the publication of which is punishable under section 124A of the Indian Penal Code, inasmuch as the said slides bring or attempt to bring into hatred or contempt and excite or attempt to excite disaffection towards the Government established by law in British India:

Now, therefore, in exercise of the power conferred by section 99A of the Code of Criminal Procedure, 1898 (Act V of 1898), the Governor in Council hereby declares to be forfeited to His Majesty every copy of the said lantern slides, namely:—

1. A slide with entries in English as follows:—"These hoards, the savings of millions of human beings for centuries, the English seized and took to London, as the Romans had taken the spoils of Greece and Ponteers to Italy. What the value of the treasure was no man can estimate, but it must have been many millions of Pounds—a vast

sum in proportion to the stock of the previous metals then owned by the Europeans:—

Brooks Adams in the Law of Civilisation and Decay—page 305."

2. A slide with entry in Bengali as follows:—"India was not allowed to follow the path of self-protection. India being under subjugation of England, could not have her revenge for England's enequity. England, by the irregular use of her political power, kept down India, her rival in the cloth trade, and subsequently throttled to death the rival with whom it was impossible for England to compete on equal terms."

3. A slide with entries as follows:—"The Directors of the Company were compelled to admit, in the clearest terms, 'We think vast fortunes acquired in inland trade have been obtained by a scene of the most tyrannic and oppressive conduct that was ever known in any age or country'."

4. A slide containing a figure of a European and a skeleton on a map of India with the remark below:—"India must be bled" Lord Salisbury 1875.

5. A slide containing the figure of a lion with a charka under its paws, with the remark in English "Death of the Charka under British Rule."

6. A slide with the following entries in Bengali:—"The condition of Bengal—No food to eat; no work to do; no cloth to wear; no industry at home; we subsist on articles of foreigners; for this fever is in body and fear in mind; wanted work + food = strength."

7. A slide containing a map of India with a figure of a man, bare of body, carrying a bundle and a lathi, with the following entries in Bengali:—"Where are you now? Within the last 150 years, your country of riches has been turned into a pauper: over that the tax on the poor is increasing day by day. Tax has been imposed even on salt, which is of essential necessity to you."

8. A slide with entries in Bengali:—"Monopoly being created on all the articles, everywhere in the country oppression was increasing on every industry. The state of things turned into such a pass that the weavers for selling cloth to others, and the brokers and the wholesale dealers for helping the weavers were being constantly seized by men of the Company, imprisoned, chained, whipped, and treated by the most nefarious means. Bolt's Consideration."

No. 12318P.—24th July 1931.—In exercise of the power conferred by section 99A of the Code of Criminal Procedure, 1898 (Act V of 1898), the Governor in Council hereby declares to be forfeited to His Majesty all copies, wherever found, of a book in Bengali entitled "Samyabad" by Somenath Lahiri printed by Biswa Ranjan Chattarji at the Golap Printing Works, 12, Hurtuky Bagan Lane, Calcutta, and published by Mrityunjoy Chattarji from the same address, on the ground that the said book contains matter which brings or attempts to bring into hatred or contempt and excites or attempts to excite disaffection towards the Government established by law in British India, the publication of which is punishable under section 124A of the Indian Penal Code.

No. 12431P.—24th July 1931.—In exercise of the power conferred by section 99A of the Code of Criminal Procedure, 1898 (Act V of 1898), the Governor in Council hereby declares to be forfeited to His Majesty all copies, wherever found, of the leaflet in English entitled "Message of the Martyrs"—A call to Arms with pictures of Rajguru, Bhagat Singh and Sukdev published by Hindusthan Gadar Party, 5, Wood Street, San Francisco, on the ground that the said leaflet contains matter which brings or attempts to bring into hatred or contempt and excites or attempts to excite disaffection towards the Government established by law in British India, the publication of which is punishable under section 124A of the Indian Penal Code.

No. 12541P.—25th July 1931.—In exercise of the power conferred by section 99A of the Code of Criminal Procedure, 1898 (Act V of 1898), the Governor in Council hereby declares to be forfeited to His Majesty all copies, wherever found, of a book in Bengali entitled "Mukti Pathe" (on the way to Freedom) by Prabhat Mohan Bandopadhyah, published by the author from Mahishathan and printed by Sajani Kanta Das at the Prabasi Press at 120/2, Upper Circular Road, Calcutta, on the ground that the said book contains matter which brings or attempts to bring into hatred or contempt and excites or attempts to excite disaffection towards the Government established by law in British India, the publication of which is punishable under section 124A of the Indian Penal Code.

No. 12620P.—27th July 1931.—In exercise of the power conferred by section 99A of the Code of Criminal Procedure, 1898 (Act V of 1898), the Governor in Council hereby declares to be forfeited to His Majesty all copies, wherever found, of a poster containing the photograph of Ram Krishna Biswas with a poem in Bengali and with the following words in English:—Accused in the Chittagong Armoury Raid—Sentenced to death in the Chandpur Inspector Murder Case—1931, on the ground that the said poster contains matter which brings or attempts to bring into hatred or contempt and excites or attempts to excite disaffection towards the Government established by law in British India, the publication of which is punishable under section 124A of the Indian Penal Code.

R. N. REID,
Chief Secy. to the Govt. of Bengal (offg.).

Jails.

Orders by the Inspector-General of Prisons, Bengal.

No. 19905.—24th July 1931.—Major N. C. Kapur, I.M.S., made over charge of the Berhampore Jail to Major S. Nag, I.M.S., on the forenoon of the 6th July 1931.

R. E. FLOWERDEW, LT.-COL., I.M.S.,
Inspr.-Genl. of Prisons, Bengal.

JUDICIAL DEPARTMENT.

No. 6211A.

Powers.

Bakarganj.—No. 6079A.—22nd July 1931.—Maulvi Kazi Fazlul Karim, Sub-Deputy Magistrate, Dakshin Shahbazpur, Bakarganj, is vested with the powers of a Magistrate of the second class.

Faridpur.—No. 6141A. — 24th July 1931.—Maulvi Muhammad Husain Ali (II), Sub-Deputy Magistrate, on probation, Faridpur, is vested with the powers of a Magistrate of the third class.

R. N. REID,
Chief Secy. to the Govt. of Bengal (offg.).

Appointments and Transfers.

Hooghly.—No. 5487J.—18th July 1931.—In exercise of the powers conferred by sections 14 and 15 and the proviso to section 357 of the Code of Criminal Procedure, 1898 (Act V of 1898), the Governor in Council is pleased—

(*a*) to confer upon each of the gentlemen named below the powers of a Magistrate of the third class, in the district of Hooghly, for a period of three years from the date of this notification,

(*b*) to direct him to sit as a member of the Sadar bench in the said district, and

(*c*) to direct him to take down evidence in the English language—

Babu Prosad Das Mallik.
Babu Abani Nath Nandi.
Babu Monmohan Singh Ray.
Khan Sahib Maulvi Chaudhuri Mohammad Abdulla.

Murshidabad-Hooghly.—No. 5521J. — 21st July 1931 – Babu Satya Charan Mukharji, Subordinate Judge, Murshidabad, is appointed to be Subordinate Judge of Hooghly, *vice* Babu Gyan Chandra Banarji.

Mymensingh-Murshidabad.—No. 5523J. — 21st July 1931.—Maulvi Sayidur Rahman, officiating Additional Subordinate Judge, Mymensingh, is appointed to act, until further orders, as Subordinate Judge of Murshidabad, *vice* Babu Satya Charan Mukharji.

Mymensingh.—No. 5525J.—21st July 1931.—In exercise of the powers conferred by sections 14 and 15 and the proviso to section 357 of the Code of Criminal Procedure, 1898 (Act V of 1898), the Governor in Council is pleased—

(*a*) to confer upon Lieutenant Sayed Muhammad Hosain Chaudhuri the powers of a Magistrate of the first class, in the district of Mymensingh, for a period of three years from the 20th August 1931, in respect to such cases as may be made over to him within the limits of the Tangail subdivision of the said district,

(*b*) to direct that he shall, in addition to sitting singly, sit as a member of the Tangail bench in the said district, and

(*c*) to direct him to take down evidence in the English language.

Rajshahi.—No. 5536J.—21st July 1931.—In exercise of the powers conferred by sections 14 and 15 and the proviso to section 357 of the Code of Criminal Procedure, 1898 (Act V of 1898), the Governor in Council is pleased—

(*a*) to confer upon Babu Jamini Kanta Bhaduri the powers of a Magistrate of the second class, in the district of Rajshahi, for a period of three years from the 31st August 1931, in respect to such cases as may be made over to him within the limits of the Nator subdivision of the said district,

(*b*) to direct that he shall, in addition to sitting singly, sit as a member of the Nator bench in the said district, and

(*c*) to direct him to take down evidence in the English language.

He is also empowered, under section 164, sub-section (*1*) of the Code of Criminal Procedure, 1898 (Act V of 1898), to record any statement or confession made to him in the course of an investigation under Chapter XIV of the said Code or at any time afterwards before the commencement of the enquiry or trial.

24-Parganas.—No. 5548J.—22nd July 1931.—In exercise of the powers conferred by sections 14 and 15 of the Code of Criminal Procedure, 1898 (Act V of 1898), the Governor in Council is pleased—

(*a*) to confer upon Mr. Robert Davidson Nicolson the powers of a Magistrate of the third class, in the district of the 24-Parganas, for a period of three years from the date of this notification, and

(*b*) to direct him to sit as a member of the Titagarh bench in the said district.

24-Parganas.— No. 5550J.—22nd July 1931.—In exercise of the powers conferred by sections 14 and 15 and the proviso to section 357 of the Code of Criminal Procedure, 1898 (Act V of 1898), the Governor in Council is pleased—

(*a*) to confer upon Babu Tarak Nath Chatarji the powers of a Magistrate of the third class, in the district of the 24-Parganas, for a period of three years from the date of this notification,

(*b*) to direct him to sit as a member of the Titagarh bench in the said district, and

(*c*) to direct him to take down evidence in the English language.

Leave.

Hooghly.—No. 5513J.—21st July 1931.—Babu Gyan Chandra Banarji, Subordinate Judge, Hooghly, is allowed leave on average pay for the period from the 2nd August 1931 to the 10th October 1931, under rules 81 (*b*) (*ii*) and 82 (*b*) of the Fundamental Rules.

NOTIFICATIONS.

Bankura.—No. 5561J.—23rd July 1931.—In exercise of the power conferred by section 65 of the Bengal Village Self-Government Act, 1919 (Bengal Act V of 1919), the Governor in Council is pleased to appoint Babu Kulada Prasad Karak, a member of the Kustia union board within the Bankura police-station in the Sadar subdivision of the Bankura district, to be, during his term of office as such member, a member of the union bench within the jurisdiction of the said union board for the purposes of that section, *vice* Babu Abinash Chandra Karak, resigned.

Bankura.—No. 5562J.—23rd July 1931.—In exercise of the power conferred by section 73 of the Bengal Village Self-Government Act, 1919 (Bengal Act V of 1919), the Governor in Council is pleased to appoint Babu Kulada Prasad Karak, a member of the Kustia union board within the Bankura police-station in the Sadar subdivision of the Bankura district, to be, during his term of office as such member, a member of the union court within the jurisdiction of the said union board for the purposes of that section, *vice* Babu Abinash Chandra Karak, resigned.

Tippera.—No. 5564J.—23rd July 1931.—In exercise of the power conferred by section 65 of the Bengal Village Self-Government Act, 1919 (Bengal Act V of 1919), the Governor in Council is pleased to appoint Munshi Abdul Majid Sarkar, a member of the Dharkhar union board within the Kasba police-station in the Brahmanbaria subdivision of the Tippera district, to be, during his term of office as such member, a member of the union bench within the jurisdiction of the said union board for the purposes of that section, *vice* Munshi Enayetulla Meah, deceased.

Tippera.—No. 5565J.—23rd July 1931.—In exercise of the power conferred by section 73 of the Bengal Village Self-Government Act, 1919 (Bengal Act V of 1919), the Governor in Council is pleased to appoint Munshi Abdul Majid Sarkar, a member of the Dharkhar union board within the Kasba police-station in the Brahmanbaria subdivision of the Tippera district, to be, during his term of office as such member, a member of the union court within the jurisdiction of the said union board for the purposes of that section, *vice* Munshi Enayetulla Meah, deceased.

Tippera.—No. 5567J.—23rd July 1931.—In exercise of the power conferred by section 65 of the Bengal Village Self-Government Act, 1919 (Bengal Act V of 1919), the Governor in Council is pleased to appoint Munshi Akamat Ali Bhuiya, a member of the Debidwar union board within the Debidwar police-station in the Sadar (North) subdivision of the Tippera district, to be, during his term of office as such member, a member of the union bench within the jurisdiction of the said union board for the purposes of that section, *vice* Babu Sreekanta Chakrabatti, resigned.

Tippera.—No. 5568J.—23rd July 1931.—In exercise of the power conferred by section 73 of the Bengal Village Self-Government Act, 1919 (Bengal Act V of 1919), the Governor in Council is pleased to appoint Munshi Akamat Ali Bhuiya, a member of the Debidwar union board within the Debidwar police-station in the Sadar (North) subdivision of the Tippera district, to be, during his term of office as such member, a member of the union court within the jurisdiction of the said union board for the purposes of that section, *vice* Babu Sreekanta Chakrabatti, resigned.

J. W. NELSON,
Secy. to the Govt. of Bengal.

LOCAL SELF-GOVERNMENT DEPARTMENT.

Public Health.

NOTIFICATION.

Minister-in-charge: The Hon'ble Mr. Bijoy Prasad Singh Roy.

No. 1692P.H.—22nd July 1931.—The following draft of amendments, which the Government of Bengal (Ministry of Public Health) intend to make, in exercise of the power conferred by section 69B (*ii*) of the Bengal Municipal Act, 1884 (Bengal Act III of 1884), in the rules published under notification No. 1501P. H., dated the 2nd August 1926, for the guidance of Commissioners of municipalities in matters connected with the carrying out of the purposes of section 69(*1*) (*ii*) of that Act, so far as they relate to the supply of water, is published for the information of persons likely to be affected thereby.

II. The draft will be taken into consideration on the 21st September 1931, and any objection or suggestion which is received by the undersigned through the District Magistrate before that date will be duly considered :—

Draft amendments.

(*1*) *For* rule 3 *substitute* the following :—

3. The Commissioners shall frame the annual budget of income and expenditure on account of the waterworks in P. H. D. Form No. 8 (Appendix A), and in this budget all income and expenditure on the waterworks shall be shown. Copies of this budget shall be submitted in duplicate to the Chief Engineers, Public Health

Department (hereinafter called "the Chief Engineer") not later than the 31st January for any remarks he may consider necessary. The Chief Engineer shall communicate his remarks to the Chairman of the Municipality not later than the 14th February, and shall also send a copy of the budget with a copy of his remarks to the Divisional Commissioner for consideration when scrutinising the general budget of the municipality.

(2) After P.H.D. Form No. 7 in Appendix A *insert* the following :—

P. H. D. Form No. 8.

.....Municipality.

Budget Estimate of waterworks fund for the year 193 -193 .

INCOME.				EXPENDITURE.				
Heads of receipt.	Actuals of previous year.	Actuals of current year (9 months).	Estimate for ensuing year.		Actuals of previous year.	Actuals of current year (9 months).	Estimate for ensuing year.	Remarks.
1	2	3	4	5	6	7	8	9
	Rs.	Rs.	Rs.		Rs.	Rs.	Rs.	
(a) Arrear water-rate ..				(a) Arrear charges				
(b) Current water-rate ..				(b) Capital outlay—				
(c) Interest on investments ..				(1) Extension of machinery ..				
(d) (1) Excess water charges (arrear).				(2) Extension of distribution system ..				
(2) Excess water charges (current).				(3) Extension of buildings ..				
				(4) Tools and plant				
(e) Warrant fees				(5) Miscellaneous				
(f) Grant and loans—				(c) Establishment—				
(1) Grant from Government ..								
(2) Loan from Government ..					No.	Rate of monthly pay.	Period employed in months.	Provident fund.
(3) Donations								
(4) Loan from other sources ..								
(g) House-connection fees ..				(1) Superintendent				
(h) Charge against road watering				(2) Clerk ..				
(i) Charge against conservancy and private latrines.				(3) Driver ..				
				(4) Assistant driver				
(j) Fine, etc.				(5) Stoker ..				
(k) Miscellaneous				(6) Greaser ..				
				(7) Khalasis ..				
				(8) Durwan ..				
				(9) Fitter ..				
				(10) Plumber ..				
				(d) Stores—				
				(1) Alum				
				(2) Bleaching powder				
				(3) Perchloron				
				(4) Fuel oil				
				(5) Coal				
				(6) Lubricating oil				
				(7) Miscellaneous stores ..				
				(8) Spare parts				
				(e) Repairs				
				(f) Cost of water purchased ..				
				(g) Repayment of loan—				
				(1) Capital				
				(2) Interest				
				(h) Proportionate cost of collection and supervision.				
				$\frac{X}{Y} \times Z$				
				N.B.—				
				X = amount of water-rate collected.				
				Y = amount of collection from all sources.				
				Z = Total collection charges.				
				(i) Machinery inspection fees ..				
				(j) Water analysis fees				
				(k) Depreciation Fund—				
				(1) Machinery and filter ..				
				(2) Tube-wells				
				(3) Engine house				
				(4) Distribution system ..				
Total Receipts ..				Total Expenditure ..				
Probable credit balance at the commencement of the year.				Probable surplus at the end of the year				
GRAND TOTAL ..				GRAND TOTAL ..				

Chairman, Municipality.

C. W. GURNER,
Secy. to the Govt. of Bengal.

Orders by the Surgeon-General with the Government of Bengal.

ERRATUM.

For "Lt.-Col., I.M.S." against the name of W. V. Coppinger in this department notification No. 8054, dated 7th May 1931, published in the *Calcutta Gazette* of 14th May 1931, *read* "Major-General, I.M.S."

W. V. COPPINGER, MAJOR-GENL., I.M.S.,
Surgn.-Genl. with the Govt. of Bengal.

EDUCATION DEPARTMENT.

NOTIFICATIONS.

Minister-in-charge: The Hon'ble Mr. K. Nazim-ud-Din, C.I.E.

Calcutta.—No. 1950Edn.—20th July 1931.—Dr. Jyotirmaya Ghosh is appointed, until further orders, as a temporary Professor of Mathematics, Presidency College, Calcutta, with effect from the 2nd July 1931, or any subsequent date on which he joins the appointment.

Chittagong-Hooghly-Rajshahi.—No. 1967-Edn.—22nd July 1931.—Mr. Praphulla Kumar Chatarji, Professor, Chittagong College, now officiating Professor, Hooghly College, is appointed to be a Professor, Rajshahi College, *vice* Babu Kausik Nath Bhattacharji, transferred, but he will continue in his present officiating appointment at the Hooghly College, until further orders.

Calcutta-Chittagong-Rajshahi.—No. 1968-Edn.—22nd July 1931.—Mr. Satish Chandra Basu, District Inspector of Schools, Calcutta, now officiating Professor, Chittagong College, is appointed to act as a Professor, Rajshahi College, with effect from the date on which he joins the appointment, *vice* Mr. Praphulla Kumar Chatarji on deputation, or until further orders.

Rajshahi-Chittagong.—No. 1969Edn.—22nd July 1931.—Babu Kausik Nath Bhattacharji, Lecturer, Rajshahi College, in the Bengal Educational Service, is appointed to be a Lecturer, Chittagong College, with effect from the date on which he joins the appointment, *vice* Mr. Praphulla Kumar Chatarji, transferred.

Registration.

NOTIFICATIONS.

Minister-in-charge: The Hon'ble Mr. K. Nazim-ud-Din, C.I.E.

Faridpur.—No. 606Regn.—21st July 1931.—In exercise of the power conferred by section 3 of the Bengal Muhammadan Marriages and Divorces Registration Act, 1876 (Bengal Act I of 1876), the Government of Bengal (Ministry of Education) are pleased to appoint Maulvi Muhammad Fazlal Haq temporarily to be a Muhammadan Registrar within the police-station of Bhanga, in the district of Faridpur, during the absence, on leave, of Maulvi Fasihuddin Ahmad, or until further orders.

Faridpur.—No. 607Regn.—21st July 1931.—In exercise of the power conferred by section 2 of the Kazis' Act, 1880 (Act XII of 1880), the Government of Bengal (Ministry of Education) are pleased to appoint Maulvi Muhammad Fazlal Haq temporarily to be the Kazi for the celebration of marriages and the performance of other rites and ceremonies within the police-station of Bhanga, in the district of Faridpur, during the absence, on leave, of Maulvi Fasihuddin Ahmad, or until further orders.

Faridpur.—No. 612Regn.—21st July 1931.—In exercise of the power conferred by section 3 of the Bengal Muhammadan Marriages and Divorces Registration Act, 1876 (Bengal Act I of 1876), the Government of Bengal (Ministry of Education) are pleased to appoint Maulvi Kazi Abdul Mannan temporarily to be a Muhammadan Registrar within unions Nos. I, II, V to VIII and XIII of the police-station of Madaripur, in the district of Faridpur, during the absence, on leave, of Maulvi Ainuddin Ahmed, or until further orders.

Faridpur.—No. 613Regn.—21st July 1931.—In exercise of the power conferred by section 2 of the Kazis' Act, 1880 (Act XII of 1880), the Government of Bengal (Ministry of Education) are pleased to appoint Maulvi Kazi Abdul Mannan temporarily to be the Kazi for the celebration of marriages and the performance of other rites and ceremonies within unions Nos. I, II, V to VIII and XIII of the police-station of Madaripur, in the district or Faridpur, during the absence, on leave, of Maulvi Ainuddin Ahmed, or until further orders.

Pabna.—No. 618Regn.—21st July 1931.—In exercise of the power conferred by section 3 of the Bengal Muhammadan Marriages and Divorces Registration Act, 1876 (Bengal Act I of 1876), the Government of Bengal (Ministry of Education) are pleased to appoint Maulvi Muhammad Bazlur Rahman temporarily to be a Muhammadan Registrar within the police-station of Raiganj, in the district of Pabna, during the absence, on leave, of Maulvi Siraj-ul Haq, or until further orders.

Pabna.—No. 619Regn.—21st July 1931.—In exercise of the power conferred by section 2 of the Kazis' Act, 1880 (Act XII of 1880), the Government of Bengal (Ministry of Education) are pleased to appoint Maulvi Muhammad Bazlur Rahman temporarily to be the Kazi for the celebration of marriages and the performance of other rites and ceremonies within the police-station of Raiganj, in the district of Pabna, during the absence, on leave, or Maulvi Siraj-ul Haq, or until further orders.

Jalpaiguri.—No. 624Regn.—21st July 1931.—In exercise of the power conferred by section 3 of the Bengal Muhammadan Marriages and Divorces Registration Act, 1876 (Bengal Act I of 1876), the Government of Bengal (Ministry of Education) are pleased to appoint Maulvi Amir Uddin Prodhan temporarily to be a Muhammadan Registrar within the police-station of Debiganj, in the district of Jalpaiguri, during the absence, on leave, of Maulvi Muhammad Younus, or until further orders.

Jalpaiguri.—No. 625Regn.—21st July 1931.—In exercise of the power conferred by section 2 of the Kazis' Act, 1880 (Act XII of 1880), the Government of Bengal (Ministry of Education) are pleased to appoint Maulvi Amir Uddin Prodhan temporarily to be the Kazi for the celebration of marriages and the performance of other rites and ceremonies within the police-station of Debiganj, in the district of Jalpaiguri, during the absence, on leave, of Maulvi Muhammad Younus, or until further orders.

Mymensingh.—No. 632Regn.—23rd July 1931.—Babu Binod Kanta Banarji Chaudhuri, Sadar Sub-Registrar of Mymensingh, was allowed leave on average pay for fifteen days, under rule 81 (*b*) (*ii*) of the Fundamental Rules, in extension of the leave already granted to him.

A. J. DASH,
Secy. to the Govt. of Bengal.

Orders by the Director of Public Instruction, Bengal.

BENGAL EDUCATIONAL SERVICE.

Chittagong Divn.—No. 22B.—6th July 1931.—Maulvi Abdul Halim, Assistant Inspector of Schools for Muhammadan Education, Chittagong Division, in the Bengal Educational Service, is granted leave on average pay, on medical certificate, for a period of four months, with effect from the 1st June 1931, under the proviso to Fundamental Rule 81 (*b*) (*ii*).

J. M. BOTTOMLEY,
Director of Public Instrn., Bengal (offg.).

Orders by the Inspector-General of Registration, Bengal.

Noakhali.—No. 479.—20th July 1931.—Maulvi Farid Bakht Mazumdar, Sub-Registrar of Senbagh, in the district of Noakhali, is allowed leave on average pay for two days, viz., on the 22nd and 23rd May 1931, under rule 81 (*b*) (*ii*) of the Fundamental Rules.

Dinajpur.—No. 480.—20th July 1931.—Babu Ramesh Chandra Chakrabatti, Sadar Joint Sub-Registrar of Dinajpur, is allowed leave on average pay for twenty-three days, under rule 81 (*b*) (*ii*) of the Fundamental Rules, with effect from the 8th April 1931.

Dinajpur.—No. 481.—20th July 1931.—Maulvi Tazuddin Ahmad, Probationary Sub-Registrar of Dinajpur, acted as Sadar Joint Sub-Registrar of Dinajpur from the 8th to 30th April 1931, during the absence, on leave, of Babu Ramesh Chandra Chakrabatti, Sadar Joint Sub-Registrar of Dinajpur.

24-Parganas.—No. 882.—20th July 1931.—Babu Kunja Bihari Chakrabatti, Sub-Registrar of Naihati, in the district of the 24-Parganas, is allowed leave on average pay for fifteen days, under rule 81 (*b*) (*ii*) of the Fundamental Rules, in extension of the leave granted to him in this department notification No. 366, dated the 30th May 1931.

Bakarganj.—No. 883.—20th July 1931.—Maulvi Muhammad Ismail, Sub-Registrar of Patuakhali, in the district of Bakarganj, is allowed leave on average pay for the 27th May 1931, under rule 81 (*b*) (*ii*) of the Fundamental Rules.

Rajshahi.—No. 884.—20th July 1931.—Maulvi Muhammad Sarwarjan, Sub-Registrar of Natore, in the district of Rajshahi, is allowed leave on average pay for fifteen days, under rule 81 (*b*) (*ii*) of the Fundamental Rules, with effect from the afternoon of the 18th May 1931.

Rajshahi.—No. 885.—20th July 1931.—Babu Manindra Kumar Maitra, Probationary Sub-Registrar of Rajshahi, acted as Sub-Registrar of Natore in the same district from the afternoon of the 18th May 1931 to the 2nd June 1931.

Mymensingh.—No. 886.—20th July 1931.—Maulvi Abul Husain, No. 1, Sub-Registrar attached to Mymensingh, is allowed leave on average pay for two months, under rule 81 (*b*). (*ii*) of the Fundamental Rules, with effect from the 10th June 1931.

Mymensingh.—No. 887.—20th July 1931.—Babu Sadananda Sen, Sub-Registrar of Jamalpur, in the district of Mymensingh, is allowed leave on average pay for two months, under rule 81 (*b*) (*ii*) of the Fundamental Rules, in extension of the leave granted to him in this department notification No. 469, dated the 15th July 1931.

24-Parganas.—No. 888.—20th July 1931.—Babu Jamini Mohan Chakrabatti, Sub-Registrar attached to Alipore, 24-Parganas, is allowed leave on average pay for fifteen days, under rule 81 (*b*) (*ii*) of the Fundamental Rules, with effect from the date on which he avails himself of it.

Dacca-Rangpur-Bakarganj.—No. 889.—20th July 1931.—Maulvi Naziruddin Muhammad, No. II, Sub-Registrar of Manohardi, in the district of Dacca, on leave, is appointed to be Sub-Registrar of Chilmari, in the district of Rangpur.

This cancels this department notification No. 464, dated the 13th July 1931, appointing Maulvi Naziruddin Muhammad, No. II, Sub-Registrar of Manohardi, Dacca, on leave, as Sub-Registrar of Nazirpur, Bakarganj.

Bogra.—No. 490.—22nd July 1931.—Maulvi Dilwar Ali Khan, Sub-Registrar of Shariakandi, in the district of Bogra, is allowed leave on average pay for two months, under rule 81 (*b*) (*ii*) of the Fundamental Rules, in extension of the leave granted to him in this department notification No. 357, dated the 25th May 1931.

S. AHMED,
Inspector-General of Regn., Bengal.

PUBLIC WORKS DEPARTMENT.

Orders by the Superintending Engineer, Northern Circle, Darjeeling.

Darjeeling, the 22nd July 1931.

Babu Romesh Chandra Guha, Upper Subordinate, is, in the interest of the public service, transferred from the Duars Roads Division to the Darjeeling Division.

A. F. L. H. HARRISON,
Superintending Engineer.

DEPARTMENT OF AGRICULTURE AND INDUSTRIES.

Veterinary.

NOTIFICATIONS.

Minister-in-charge: The Hon'ble Khan Bahadur Maulvi K. G. M. Faroqui.

Calcutta.—No. 3128Vety.—23rd July 1931.—Rai Sahib Nripendra Nath Mazumdar, Assistant Director, Civil Veterinary Department, was on leave on half average pay for the period from 1st to 6th July 1931, both days inclusive, under rule 81 (*d*) of the Fundamental Rules, in extension of the leave granted to him under the orders of the 19th June 1931.

Calcutta.—No. 3131Vety.—23rd July 1931.—Rai Sahib Nripendra Nath Mazumdar was permitted to resume charge of his duties as Assistant Director, Civil Veterinary Department, Western Range, on the expiry of his leave granted in notifications No. 264T.A.I., dated the 19th June 1931, and No. 3128 Vety., dated the 23rd July 1931.

Excise.

NOTIFICATIONS.

Minister-in-charge: The Hon'ble Mr. Bijoy Prasad Singh Roy.

Calcutta.—No. 3159Ex.—24th July 1931.—Rai Sahib Tarakeswar Bhattacharji, Deputy Commissioner of Excise and Salt, Bengal, is allowed leave on average pay for two months and twenty-four days, under rule 81 (*b*) (*ii*) of the Fundamental Rules, with effect from the 21st July 1931.

Calcutta.—No. 3160Ex.—24th July 1931.—Maulvi Mabinuddin Ahmad, now officiating as Deputy Commissioner of Excise and Salt, Bengal, will continue to act as such, during the absence, on leave, of Rai Sahib Tarakeswar Bhattacharji, or until further orders.

Miscellaneous.

NOTIFICATIONS.

Minister-in-charge: The Hon'ble Khan Bahadur Maulvi K. G. M. Faroqui.

Calcutta.—No. 3114Mis.—22nd July 1931.—Mr. J. C. Sen, Assistant Secretary to the Government of Bengal, Department of Agriculture and Industries, is allowed leave on average pay for fifteen days, under rule 81 (*b*) (*ii*) of the Fundamental Rules, with effect from the 13th July 1931.

Calcutta.—No. 3115Mis.—22nd July 1931.—Babu Jatindra Mohan Ganguly, Head Assistant, Industries Branch, is appointed to act as Assistant Secretary to the Government of Bengal, Department of Agriculture and Industries, during the absence, on leave, of Mr. J. C. Sen, or until further orders.

L. R. FAWCUS,
Secy. to the Govt. of Bengal.

IRRIGATION DEPARTMENT.

Irrigation.

NOTIFICATION.

No. 16I.—17th July 1931.—The following draft of amendments, which, in exercise of the powers conferred by sections 6 and 11 of the Canals Act, 1864 (Bengal Act V of 1864), the Governor in Council intends to make, in the rules and schedule of rates of tolls for the Rampur Bil Khal joining the Gazipur Khal at Gazipur and Chechri on the north and Amua Done at Amua on the south in the district of Bakarganj (published in Bengal Government notification No. 13I., dated the 7th April 1931, at pages 450-51, Part I of the *Calcutta Gazette* of the 16th idem), is hereby published for the information of persons likely to be affected thereby.

2. The draft will be taken into consideration on or after the 10th September 1931, and any objections or suggestions received by the undersigned before that date will be considered:—

Draft amendments.

Schedule of rates of tolls.

Insert the words "and Chechri" after the words "at Amua" at the end of the last line of rule 12 of the said rules.

H. C. V. PHILPOT,
Secy. to the Govt. of Bengal.

BOARD OF REVENUE, BENGAL.

NOTIFICATION.

Malda.—No. 7331C.P.—21st July 1931.—In exercise of the powers conferred by clause 2 of section 8 of the Bengal Land Revenue (Assistant Collectors) Regulations, 1821 (IV

of 1821), the Board of Revenue authorises Babu Sudhanshu Ranjan De, Sub-Deputy Collector and Assistant Settlement Officer, Malda, who has been placed on duty in connection with the maintenance for the purposes of section 158A of the Bengal Tenancy Act, 1885, of the record-of-rights of the Mathurapur Estate in the district of Malda, belonging to the Mathurapur Zamindari Company, Limited, to exercise and perform within the local limits of the said estate any of the powers and duties vested in the Collectors of Land Revenue under any enactment in force therein for the purpose of the said work of maintenance of the record-of-rights.

D. MACPHERSON,

Secy. to the Board of Revenue, Bengal.

TREASURY NOTICE.

Burdwan, the 20th July 1931.

Uncovenanted Deputy Collector Babu Kshitish Chandra Gangooli is placed in charge of the Burdwan Treasury with effect from the afternoon of the 18th July 1931, and is authorised to draw bills on other Treasuries, *vice* Babu Phani Bhusan Chakravarti, transferred.

H. C. BOSE, *Collector.*

SHERIFF'S OFFICE, THE 16TH JULY 1931.

Notice is hereby given that the Fourth Criminal Sessions of the year 1931 of the High Court of Judicature at Fort William in Bengal for the town of Calcutta and Factory of Fort William and the places subordinate thereto, will be held at the Court House, in the town of Calcutta, on Monday, the 3rd day of August next, at 11 o'clock in the forenoon, and thenceforward from day to day until the said sessions be over. And it is hereby proclaimed that all persons who are to prosecute any of the prisoners to be brought up for trial at the said sessions be present then and there to prosecute.

P. N. TAGORE, *Sheriff.*

সরিফ আফিস, সন ১৯৩১ সাল, তারিখ ১৬ই জুলাই।

সকলকে সমাচার দেওয়া যাইতেছে যে সুবে বাঙ্গালার ফোর্ট উইলিয়ম দুর্গের অধীন সহর কলিকাতার ও অন্যান্য স্থানের ফৌজদারী বিচার নিষ্পত্তি জন্য আগামী সন ১৯৩১ সালের ৩রা আগাষ্ট, সোমবার বেলা ১১ ঘটিকার সময় এবং যে পর্য্যন্ত সেশিয়ানের কার্য্য শেষ না হয় প্রতিদিন উক্ত সময়ে কলিকাতার হাইকোর্টের আপন আদালত ঘরে সন ১৯৩১ সালের চতুর্থ ক্রিমিনেল সেশিয়ান বসিবেক এবং এতদ্বারা প্রচার করা যাইতেছে যে, যে সকল ব্যক্তি কোন কয়েদির বিরুদ্ধে ফৌজদারী মিছিল করিবেক তাহারা উক্ত স্থানে উক্ত সময়ে হাজির থাকিয়া মোকদ্দমা করে, ইতি।

পি, এন, ঠাকুর,
সরিফ।

HIGH COURT NOTICES.

Civil.

The 20th July 1931.

No. 9491A.—Babu Sailendra Nath Mitra, munsif of Jangipur, in the district of Murshidabad, is vested with the powers of a Judge of a Court of Small Causes for the trial of suits cognizable by such a Court up to the value of Rs. 100 within the local limits of the Jangipur munsifi.

By order of the High Court,

W. MCC. SHARPE, *Registrar.*

Calcutta Bar Council.

The 23rd July 1931.

The rules prescribed by clauses 2, 20 (*i*), 20 (*iii*) and 20 (*iv*) framed by the High Court of Judicature at Fort William in Bengal under clause (*2*) of section 6 of the Indian Bar Councils Act, 1926 (XXXVIII of 1926), and published in the *Calcutta Gazette* of 1st March 1928 and in the *Assam Gazette* of 7th March 1928, are amended by the Bar Council with the previous sanction of the High Court of Judicature at Fort William in Bengal, as follows:—

(*a*) That rule 2 be amended by substituting the word "two" in place of "one" appearing in the said rule.

(*b*) That to rule 20 (*i*) between the words "Bar Council" and "and annually" there be added the words "all elected members."

(*c*) That to rule 20 (*iii*) between the words "of office" and "or the balance" there be added the word "annually," and that from the same sub-section of the same section, there be deleted the words "shall be ascertained. . . . . members go out of office."

(*d*) That the words " by reason of his retirement or" be deleted from rule 20 (*iv*).

S. K. DUTT,

for *Secy., Calcutta Bar Council.*

ORDERS BY COMMISSIONERS OF DIVISIONS.

Burdwan Division—Chinsura.

No. 2124J.G.—16th July 1931.—In accordance with the provisions of rule 63 (*2*), Chapter IV of the Bengal Jail Code, Volume I, I hereby re-appoint Raja Manilall Singh Roy, C.I.E., and Rai Tara Prasanna Mukherjee Bahadur, C.I.E., to be non-official visitors of the Sadar Jail in the district of Burdwan for a period of two years with effect from the 5th April 1931.

No. 1046M.—17th July 1931.—It is hereby notified for general information that, under rule 20 (*b*) of the rules for the management of charitable hospitals and dispensaries in Bengal, the following gentlemen have been appointed to be members of the committee for

the management of the charitable dispensary at Sonamukhi in the district of Bankura:—

Subdivisional Officer of Vishnupur (*ex-officio*).
Civil Surgeon of Bankura (*ex-officio*).
Babu Tinkari Banarjee.
Babu Bishnupada Ghosh.
Babu Haripada De.
Babu Ram Prasad Dutt.
Maulvi Dilwar Hossain.
Syed Dilwar Ali Mirja.
Babu Bibhuti Bhusan Mukherjee.
Babu Suresh Chandra Naik.

No. 1055M.—21st July 1931.—It is hereby notified for general information that, under rule 20 (*b*) of the rules for the management of charitable hospitals and dispensaries in Bengal, the following gentlemen have been appointed to be members of the committee for the management of the charitable dispensary at Tamluk in the district of Midnapore:—

The Subdivisional Officer, Tamluk (*ex-officio*).
The Senior Munsif, Tamluk (*ex-officio*).
The Assistant Surgeon, Tamluk (*ex-officio*).
Babu Nagendra Nath Roy, B.L., Municipal Commissioner.
Rai Sahib Sasadhar Das, Honorary Magistrate, Chairman.
Babu Lalit Mohan Mitra, B.L., Municipal Commissioner.
Babu Rajani Kanta Misra, L.M.P., Municipal Commissioner.
Babu Manmatha Nath Bose, Municipal Commissioner.
Babu Rajani Kanta Chakravarty, Vice-Chairman.
Babu Baranasi Adhikary, L.M.P., Municipal Commissioner.
Babu Pramatha Nath Chakraverty, Muktear.
Babu Bankim Chandra Bhaumik, Pleader.

L. B. BURROWS, *Commissioner* (*offg.*).

Burdwan, the 13th July 1931.

It is hereby notified for general information that, under section 13 of the Bengal Village Self-Government Act, 1919 (Bengal Act V of 1919), read with rule 36 of the rules for the election and appointment of members of union boards, etc., Maulvi Daudar Rahman, B.A., B.T., has been appointed by me to be a member of the Kusumgram union board in police-station Monteswar in the Kalna subdivision of Burdwan district, *vice* Munshi Md. Musha Khan, deceased.

Burdwan, the 17th July 1931.

It is hereby notified for general information that, under section 13 of the Bengal Village Self-Government Act, 1919 (Bengal Act V of 1919), read with rule 36 of the rules for the election and appointment of members of union boards, etc., Babu Ram Saday Ghosh has been appointed by me to be a member of the Dignagar union board in police-station Ausgram in the district of Burdwan, *vice* Babu Sachinandan Dutta, deceased.

It is hereby notified for general information that, under section 13 of the Bengal Village Self-Government Act, 1919 (Bengal Act V of 1919), read with rule 36 of the rules for the election and appointment of members of union boards, etc., Maulvi Syed Abul Fazel *alias* Abu Taher has been appointed by me to be a member of the Gopalbera union board in police-station Khandoghosh in the district of Burdwan, *vice* Munshi Tafzillur Rahim, removed.

Burdwan, the 21st July 1931.

It is hereby notified for general information that, under section 13 of the Bengal Village Self-Government Act, 1919 (Bengal Act V of 1919), read with rule 36 of the rules for the election and appointment of members of union boards, etc., Babu Monindra Nath Chatterji has been appointed by me to be a member of the Kuchut union board in police-station Memari in the district of Burdwan, *vice* Babu Probodh Chandra Sarkar, resigned.

H. C. BOSE, *District Magistrate* (*offg.*).

Dacca Division—Dacca.

Corrigendum.—No. 3734J. — 20th July 1931.—In this office notification No. 585J., dated the 11th May 1931, publishing the names of elected and appointed members of the Baldhara union board in police-station Singair in the Manikganj subdivision of the Dacca district at page 573 of Part I of the *Calcutta Gazette*, dated the 14th idem, *for* "Najibuddin Khan" *read* "Najibuddin Ahamed."

No. 3753J.—21st July 1931.—Maulvi Dalil-uddin Ahmed, Sub-Deputy Collector and Circle Officer, West Circle, Manikganj, in the district of Dacca, was allowed leave on average pay for fifteen days, under rule 81 (*b*) (*n*) of the Fundamental Rules, with effect from the 1st July 1931.

No. 3758J.—21st July 1931.—Maulvi Muhammad Husain Ali, No II, Sub-Deputy Collector, on probation, Faridpur, was allowed leave on average pay for ten days, under rule 81 (*b*) (*ii*) of the Fundamental Rules, with effect from the 2nd July 1931.

A. CASSELLS, *Commissioner* (*offg.*).

Dacca, the 20th July 1931.

No. 5366M.—It is hereby notified for general information that, under section 13 of the Bengal Village Self-Government Act, V of 1919, Babu Revati Mohan Gupta has been appointed to be a member of the Madhyapara union board in Sherajdikhan police-station in Munshiganj subdivision of the district of Dacca, *vice* Babu Jatindra Lal Chakravarty, deceased.

No. 5368M.—It is hereby notified for general information that, under section 13 of the Bengal Village Self-Government Act, V of 1919, Munshi Sahebali Sarker has been elected to be a member of the Gosinga union board in Sripur police-station in Sadar (North) subdivision of the district of Dacca, *vice* Munshi Muhammad Ashu Khan, deceased.

L. G. DURNO, *District Magistrate*.

Presidency Division—Calcutta.

No. 1209R.G.—18th July 1931.—Babu Promode Ranjan Das Gupta, Sub-Deputy Collector and Circle Officer, Narail, Jessore, is transferred to the Jhenidah subdivision of that district as Circle Officer.

No. 1214R.G.—18th July 1931.—Maulvi Enamul Kabir, Sub-Deputy Collector and Circle Officer, Jhenidah, Jessore, is transferred to the Narail subdivision of that district as Circle Officer.

No. 1905L.S.-G.—20th July 1931.—It is hereby notified for general information that, under rule 23 of the dispensary rules, Babu Srish Chandra Pariel has been appointed by the district board of the 24-Parganas to be a member of the committee for the management of the charitable dispensary at Habra in the district of the 24-Parganas, in place of Babu Atul Chandra Pariel, deceased.

No. 1908L.S.-G.—20th July 1931.—In exercise of the powers conferred upon me by section 25 of the Bengal Local Self-Government Act, III (B.C.) of 1885, as amended, I approve the election of the following gentlemen as Chairman of the local boards named below in the district of Khulna:—

Bagerhat local board.

Babu Suk Lal Nag Majumdar.

Khulna Sadar local board.

Babu Hem Nath Banerjee.

Satkhira local board.

Maulvi Abdur Rauf Khan Chowdhury.

No. 1246R.G.—22nd July 1931.—Babu Nripendra Kumar Sen, Sub-Deputy Collector and Circle Officer, Satkhira, Khulna, is granted leave on average pay for three weeks, under rule 81 (*b*) (*ii*) of the Fundamental Rules, with effect from the 10th July 1931, or from any subsequent date on which he avails himself of it.

No. 1234R.G.—23rd July 1931.—Babu Satyendra Nath Banerji, Sub-Deputy Collector, is temporarily posted to Sadar, 24-Parganas, on relinquishing charge of his duties in the Settlement Department.

No. 1240R.G.—23rd July 1931.—Babu Rai Charan Pal, Sub-Deputy Collector, on leave, is posted temporarily to the Sadar station of the district of Khulna.

F. W. ROBERTSON, *Commissioner (offg.)*.

Alipore, the 20th July 1931.

It is hereby notified for general information that, under section 13 of the Bengal Village Self-Government Act V of 1919, read with rule 35 of the rules for the election and appointment of members of union boards, Munshi Mobarak Ali Biswas has been duly elected as a member of the Habra union board in Ward No. III in police-station Habra in the district of the 24-Parganas, *vice* Muhammad Mobarak Ali, deceased.

K. L. MUKHERJI,
Addl. District Magistrate, 24-Parganas.

Rajshahi Division—Jalpaiguri.

No. 2582M.—20th July 1931.—It is hereby notified for general information that at the general and at the fresh elections held on the 9th December 1930 and on the 7th July 1931, respectively, the following gentlemen have been duly elected as Commissioners of the Sherpur Municipality in the district of Bogra:—

Ward No. I.

Babu Surendra Mohon Maitra.
Babu Prafulla Chandra Tarafdar.
Babu Moni Gopal Datta.

Ward No. II.

Babu Shyama Kishore Munshi.
Babu Jadu Gopal Karmakar.
Babu Anath Bandhu Saha.

Ward No. III.

Babu Gobinda Lal Kundu.
Babu Amulya Chandra Sanyal.

No. 339P.W.—21st July 1931.—It is hereby notified for general information that in exercise of the powers delegated to me by Bengal Government notification No. 3403-L.S.-G., dated the 1st February 1904, I order the establishment, under section 6 (*c*) of the Bengal Ferries Act, I of 1885, of a new public ferry to be called Lakhipore Dudua ferry over the river Dudua at Lakhipore at the terminus of Salbari-Lakhipore road in Dhupguri-Falakata thanas in the district of Jalpaiguri.

2. In exercise of the power delegated to me by Bengal Government notification No. 217L.S.-G., dated the 12th January 1905, I also direct, under section 35 of the said Act, that the above-mentioned ferry shall be managed by the district board of Jalpaiguri and that all the proceeds of the said ferry and all the fines levied and the compensation received under the said Act in respect thereof shall be paid into the District Fund with effect from the date of this notification.

J. G. DRUMMOND, *Commissioner (offg.)*.

Dinajpur, the 21st July 1931.

No. 4242J.—It is hereby notified for general information that, under section 13 of the Bengal Village Self-Government Act, 1919 (Bengal Act V of 1919), Maulvi Nehaluddin Ahmmed of Daroil has been appointed to be a member of the Dhamoir union board No. 4 in the police-station Birol in the Sadar subdivision of the district of Dinajpur, *vice* Pear Mohammed Choudhury of Daroil, deceased.

No. 4243J.—It is hereby notified for general information that, under section 13 of the Bengal Village Self-Government Act, 1919 (Bengal Act V of 1919), Maulvi Nasiruddin Ahmmed Sarker of Bajnahar has been appointed to be a member of the Dhamoir union board No. 4 in the police-station Birol in the Sadar subdivision of the district of Dinajpur, *vice* Haidar Hazi of Kashidanga, deceased.

L. C. GUHA, *District Magistrate.*

The Calcutta Gazette

THURSDAY, JULY 30, 1931

Part I A

Orders and Notifications by the Government of India republished for general information.

FOREIGN AND POLITICAL DEPARTMENT.

NOTIFICATIONS.

Simla, the 14th July 1931.

No. 423-I.—With the sanction of His Majesty's Government, the Governor-General in Council is pleased to recognise the appointment of Dr. Eduard von Selzam as Vice-Consul for Germany at Calcutta.

The 15th July 1931

No. 427-I.—With the sanction of His Majesty's Government, the Governor-General in Council is pleased to recognise provisionally the appointment of Senhor Murillo Martins de Souza as Consul for Brazil at Calcutta.

E. B. Howell,

Foreign Secy. to the Govt of India.

DEPARTMENT OF EDUCATION, HEALTH AND LANDS.

NOTIFICATION.

H. (G.).

Simla, the 16th July 1931.

No 1276.—In exercise of the powers conferred by sub-section (1) of section 213 of the Indian Merchant Shipping Act, 1923 (XXI of 1923) the Governor General in Council is pleased to make the following rules to regulate fire extinguishing appliances on pilgrim ships, the same having been previously published as required by sub-section (3) of the said section, namely:—

Rules.

1. (1) **Title and extent of application.**—These rules may be called the Fire Extinguishing Appliances (Pilgrim Ships) Rules, 1931.

(2) They apply to pilgrim ships, and shall come into force on the 1st day of September 1931, from which date rules 11 to 15 of the rules published with the notification of the Government of India in the Home Department No. 1902 (Sanitary), dated the 14th October 1910, shall be cancelled.

Provided that these rules shall not apply, and rules 11 to 15 of the rules published with the said notification shall continue to apply to pilgrim ships with regard to which a certificate of survey was granted before the 1st day of September 1931, under section 136 or section 144 of the Indian Merchant Shipping Act, 1923, while such certificate is in force

2 **Definition.**—In these rules "approved" means approved by the Governor General in Council.

3. (1) **Spaces occupied by passengers and crew.**—On every ship of more than 4,000 tons gross tonnage, at least three, and on every other ship at least two, steam or equivalent pumps shall be available for the spaces occupied by passengers and crew: provided that more than two pumps shall not be required

on ships whose keels were laid before the 1st September 1931. Each such pump shall be capable of providing a full supply of water, in accordance with the requirements specified in sub-rule (1) of rule 6, to one or more ranges of water service pipes. The service pipes shall be of metal, with branches so arranged that the fire hoses may be coupled thereto, and two powerful jets of water may be rapidly and simultaneously brought to bear, by means of single lengths of hose from each branch, upon any part of each deck space occupied by passengers or crew, when the watertight and fire doors are closed. Where the water service is on an exposed deck, the branches necessary to comply with the foregoing requirements shall, in the case of vessels whose keels are laid after the 1st September 1931, be fitted on both sides of the deck.

Provided that in the case of vessels whose keels were laid before the 1st September 1931, the main engine sanitary pump shall be allowed to count as one of the pumps required to be available if it is so fitted as to be capable of serving the purpose of such pump.

(2) Every ship shall carry an efficient portable hand pump with suction and hose complete.

(3) Portable chemical fire extinguishers of an approved pattern shall be carried in every compartment wherein passengers and crew are accommodated. There shall be two extinguishers in each such compartment, and when passengers are carried in enclosed spaces above the upper deck, there shall be at least one extinguisher on each side of such spaces at intervals of not more than 60 feet.

4. **Cargo spaces.**—On every ship arrangements shall be made whereby two powerful jets of water may be rapidly and simultaneously directed into any cargo compartment, and, save in the case of a ship of less than 1,000 tons gross tonnage, satisfactory means shall also be provided whereby steam or other gas incapable of supporting combustion may be conveyed to each such compartment.

5. (1) **Machinery and bunker spaces.**—Arrangements shall be made in ships which use coal as fuel whereby two powerful jets of water can be rapidly and simultaneously directed into any part of the coal bunker spaces, boiler rooms and machinery spaces.

(2) In ships in which the main boilers are oil fired the following additional arrangements shall be made:—

(*a*) The fire hoses in the machinery spaces shall be provided with additional conductors suitable for spraying water on oil without undue disturbance of the surface.

(*b*) In each firing space there shall be placed a receptacle containing 10 cubic feet of sand, sawdust impregnated with soda, or other approved dry material; and scoops for distributing the same.

(*c*) In each boiler room, and in each of the machinery spaces in which a part of the oil fuel installation is situated, there shall be provided two approved portable chemical extinguishers of a type discharging froth or other approved medium suitable for quenching oil fires.

(*d*) Means shall be provided whereby froth may be rapidly discharged and distributed over the whole of the lower parts of any boiler room, or of any machinery space in which oil fuel units or settling tanks may be situated. The quantity of froth which can be discharged should be amply sufficient to cover up to a depth of 6 inches the whole area of the plating formed in any one compartment by the inner bottom plating, or by the shell plating of the vessel if there is no double bottom tank. If the engine and boiler rooms are not entirely separate, and fuel oil can drain from the boiler room bilges into the engine room, the combined engine and boiler rooms shall be treated as one compartment. Provided that if other effective means are available for combating fire and the apparatus can be controlled from outside the compartment in which fire may occur, the Governor General in Council may exempt from the requirements of this clause ships whose keels were laid before the 1st September 1931 on which it would not be reasonable to require the fitting of large froth installations.

(*e*) There shall further be provided one extinguisher of at least 30 gallons capacity in ships having one boiler room, and two such extinguishers in ships with more than one boiler room. These extinguishers shall be provided with hoses on reels suitable for reaching any part of the boiler rooms and spaces containing oil fuel pumping units. Provided that the Governor General in Council may permit the fitting of any other equally efficient apparatus in place of the 30 gallons extinguisher.

(*f*) All containers and valves by which they are operated shall be easily accessible and so placed that they will not readily be cut off from use in case of fire.

6. (1) **Pumps.**—In all ships each of the steam or equivalent pumps shall be capable of supplying simultaneously two powerful jets of water for use in any part of the vessel. The pumps shall be worked by steam or by some other equally efficient motive power, and shall always be available for immediate use at all reasonable times when the vessel is in commission.

(2) All steam or equivalent pumps shall be provided with effective escape valves suitably adjusted and so placed as to prevent excessive pressure in any part of the water service system.

7. **Water service pipes.**—The main water service pipes shall be made of wrought material, and, if of iron or steel, shall in the case of vessels whose keels were laid after the 1st September 1931, be galvanised. They shall be sufficiently large in diameter for the adequate supply of water to the fire hoses which shall be secured to them for simultaneous operation. The branches shall be so placed that the fire hoses may be conveniently coupled to them, and cocks or valves shall be fitted where required to admit of any hose being removed, if desired, while the pumps are at work.

8. (1) **Fire Hoses.** The fire hoses shall be of leather, seamless hemp, flax canvas of first-class quality, or other approved material.

They shall be provided with suitable metal unions and conductors, and with gooseneck connections where necessary.

(2) A sufficient number of fire hoses with attachments and conductors shall be suitably distributed about different decks in the ship so as to be readily available for rapid use in any space occupied by passengers or crew, and not less than three hoses and attachments shall be provided in any vessel.

(3) The fire hoses and the conductors, and other apparatus referred to in sub-rules (1) and (2), together with coupling wrenches if required, shall be kept ready for use in conspicuous positions near the water service hydrants or connections. They shall be used only for the purposes of extinguishing fires or for testing the fire extinguishing apparatus at fire drills and surveys, and not for washing decks.

9. **Arrangements for injecting steam or other gas into Cargo Spaces and Boiler Rooms.**—Where provision is made for the injection of steam or other gas into the cargo spaces and boiler rooms for fire extinguishing purposes the necessary pipes for conveying the steam or gas to holds or other compartments shall be provided with controlling valves or cocks readily accessible from the deck and so marked as to indicate clearly the compartments to which the pipes are respectively led. Suitable provision shall be made for locking these valves or cocks so as to prevent inadvertent admission of the steam or gas to any compartment. If any pipe is led to a space to which passengers have access, it shall be furnished with an additional stop valve or cock also capable of being locked. Provided that the Governor General in Council may permit the substitution of any other equally efficient safety device giving the requisite security from danger.

10. (1) **Fluid Fire Extinguishers.**—A sufficient number of approved portable fluid fire extinguishers discharging water shall be provided in accordance with the requirements of rules 3 and 5. For ordinary purposes not specifically referred to in these rules, the capacity of portable extinguishers shall be not more than three imperial gallons, and not less than two imperial gallons, provided the Governor General in Council may, in his discretion, permit the use of an extinguisher of less than two gallons capacity in special circumstances.

(2) An approved type of portable extinguisher discharging a medium other than water may in the case of not more than 20 per cent. of the total number of extinguishers required to be carried be substituted for the ordinary water-discharging extinguisher.

(3) The portable hand fluid fire extinguishers (apart from those supplied in boiler rooms, etc., specially for use in connection with oil fuel) shall not be of more than two types in any one ship.

(4) All extinguishers, whether portable or otherwise, shall be placed in positions where they are readily accessible.

11. **Smoke Helmets and Safety Lamps.**—At least two smoke helmets and two safety lamps of approved types shall be included in the fire extinguishing equipment of every vessel and the helmets shall be stowed separately. The members of the crew shall be practised regularly in their use.

12. **Emergency Appliances.**—The necessary emergency fire appliances such as knives, axes, and crowbars shall be kept in a place readily accessible at all times from different parts of the ship.

13. **Fire Drill.**—Fire drill shall be observed at least once a week on board all vessels and during such drill all fire appliances shall be put into use and the fact entered in the Log Book. The great utility of woollen or asbestos blankets for smothering small fires shall always be impressed on all persons taking part in a fire drill.

14. (1) **Custody of fire apparatus and fire patrol.**—The fire apparatus shall be placed by the master under the special charge of one of the principal officers of the ship and of the ship's carpenter, who shall both be held responsible that the apparatus is kept in a state fit for immediate use. As soon as possible after leaving port, the officers and crew shall be divided into parties and assigned to stations in case of fire.

(2) A continuous patrol system shall be organised so that any outbreak of fire may be promptly detected.

15. (1) **Stowage of cargo and disposal of inflammables.**—The cargo of every ship shall, before she leaves port, be properly stowed away, and the decks shall be cleared of any loose straw, hay and other inflammable material. Any goods which are dangerous by reason of their inflammability or liability to explosion shall be stowed, subject to the provisions of any law or rules in force, in such manner as to safeguard the ship from danger of fire or explosion. The tanks of motor cars carried on the ship shall be drained before loading.

(2) Before a ship leaves port, every passenger shall deliver up any lucifer matches, gun-powder or other inflammable article in his possession.

16. **Use of naked lights and spirits.**—Naked lights shall not be used in the holds or store rooms or between decks, except under trustworthy superintendence. No person shall read in bed with a naked light. Casks or drums containing spirit shall not be opened in the hold but shall be hoisted on deck for the purpose.

17. **Relaxation of rules.**—In the case of a small vessel under 200 feet in length when it is shown to be unreasonable to require full compliance with any of the provisions of these rules, such relaxation shall be granted as the Governor General in Council may, having regard to all the circumstances of the case, direct.

18. **Penalty.**—Whoever does any act in contravention of any of the provisions of these rules shall be punishable with fine which may extend to two hundred rupees.

A. B. REID,

Joint Secy. to the Govt. of India (offg.).

DEPARTMENT OF COMMERCE.

NOTIFICATIONS.

MERCHANT SHIPPING.

Simla, the 18th July 1931.

No. 31-M.I./31.—In exercise of the powers conferred by clauses (*a*) and (*b*) of sub-section (*4*) of section 136 of the Indian Merchant Shipping Act, 1923 (XXI of 1923), and in supersession of the Notification of the Government of India in the Department of Commerce, No. 31-M.I. (3)/30, dated the 25th October 1930, and of all other previous orders on the subject, the Governor-General in Council is pleased to delegate in respect of the ports specified in the first column of the Schedule annexed hereto—

(1) to the officers specified in the corresponding entry in the second column of the said Schedule the function assigned to the Governor-General in Council by sub-section (*1*) of the said section of granting certificates of survey of steamships,

(2) to the officers specified in the corresponding entry in the third column of the said Schedule the function assigned to the Governor-General in Council by sub-section (*3*) of the said section of causing notice to be given that a certificate of survey of a steamship is ready for delivery.

Schedule.

1	2	3
Ports.	Officers to whom the function of granting certificates of survey is delegated.	Officers to whom the function of giving notice of the readiness of such certificates for delivery is delegated.
* * * * *		
Calcutta ..	The Principal Officer, Mercantile Marine Department, Calcutta District, Calcutta.	The Principal Officer, Mercantile Marine Department, Calcutta District, Calcutta.
Chittagong		The Nautical Surveyor, Mercantile Marine Department, Chittagong.
* * * * *		

No. 31-M.I./31.—In pursuance of sub-section (*1*) of section 136 of the Indian Merchant Shipping Act, 1923 (XXI of 1923), and in supersession of all previous orders on the subject, the Governor-General in Council is pleased to appoint the officers specified in the second column of the annexed Schedule to be the officers through whom the certificates of survey referred to in the said sub-section shall be delivered at the port specified in the corresponding entry in the first column of the said Schedule:—

Schedule.

Ports	Officers.
* * * * *	
Chittagong ..	The Nautical Surveyor, Mercantile Marine Department, Chittagong.
* * * * *	

PORTS.

The 18th July 1931.

No. 219-P. & L./31.—In supersession of the Notification by this Department, No. 219-P. & L./31, dated the 9th May 1931, and in pursuance of Sections 88 (2) and 87 (4) of the Chittagong Port Act, 1914, as amended up to date, the following abstracts of the revised budget estimates for the year 1930-31 and the budget estimates for the year 1931-32 of receipts and expenditure of the Commissioners for the Port of Chittagong are published for general information:—

	Revised estimates for 1930-31.	Budget estimates for 1931-32.
	Rs.	Rs.
(*a*) CHITTAGONG PORT FUND.		
(*i*) *Revenue Account.*		
Opening balance on the 1st April	3,61,850	444
Total estimated receipts ..	12,02,968	13,78,250
Total ..	15,64,818	13,78,694
Total estimated charges ..	15,64,374	13,75,890
Closing balance on the 31st March	444	2,804
(*ii*) *Capital Account.*		
Opening balance on the 1st April	8,583	8,583
Total estimated receipts ..	8,17,422	5,49,550
Total ..	8,26,005	5,58,133
Total estimated charges ..	8,17,422	5,54,550
Closing balance on the 31st March	8,583	3,583
(*b*) CHITTAGONG PILOTAGE FUND.		
(*i*) *Revenue Account.*		
Opening balance on the 1st April (including Rs. 9,909 invested in Government Promissory Notes)	1,48,076	1,56,388
Total estimated receipts ..	81,250	80,250
Total ..	2,29,326	2,36,638
Total estimated charges ..	72,938	1,23,089
Closing balance on the 31st March (including Rs. 9,909 invested in Government Promissory Notes) ..	1,56,388	1,13,549

	Revised estimates for 1930-31	Budget estimates for 1931-32.
	Rs.	Rs.
(ii) *Capital Account.*		
Opening balance on the 1st April	..	..
Total estimated receipts ..	1,800	400
Total ..	1,800	400
Total estimated charges ..	1,800	400
Closing balance on the 31st March	..	..
(c) MISCELLANEOUS RESERVE FUNDS.		
(i) *Depreciation Fund.*		
Opening balance on the 1st April	5,23,946	5,18,438
Total estimated receipts ..	84,492	86,863
Total ..	6,08,438	6,05,301
Total estimated charges ..	90,000	..
Closing balance on the 31st March	5,18,438	6,05,301
(ii) *Revenue Reserve Fund.*		
Opening balance on the 1st April	1,69,359	87,147
Total estimated receipts ..	..	..
Total ..	1,69,359	87,147
Total estimated charges ..	82,212	82,212
Closing balance on the 31st March	87,147	4,935
(iii) *General Reserve Fund.*		
Opening balance on the 1st April	88,156	88,156
Total estimated receipts ..	..	..
Total ..	88,156	88,156
Total estimated charges ..	..	20,000
Closing balance on the 31st March	88,156	68,156
(iv) *Pilotage Miscellaneous (Depreciation) Fund.*		
Opening balance on the 1st April	17,148	20,444
Total estimated receipts ..	3,296	3,296
Total ..	20,444	23,740
Total estimated charges ..	..	..
Closing balance on the 31st March	20,444	23,740

A. RAISMAN,

Joint Secy. to the Govt. of India (offg.).

TARIFFS.

The 18th July 1931.

No. 155-T. (3).—In pursuance of item 34-A of Schedule II to the Indian Tariff Act, 1894 (VIII of 1894), the Governor-General in Council is pleased to declare that the following substances are of a like nature or use to saccharine, namely:—

(1) Toluene ortho sulphonic acid;

(2) Toluene ortho sulphon chloride or Toluene ortho sulphonyl chloride or Toluene ortho chlorsulphonic acid;

(3) Toluene ortho sulphonamide or Toluene ortho sulphamide;

(4) Ortho-sulpho benzoic acid and derivatives;

(5) Benzamide ortho sulphonic acid and derivatives;

(6) Ortho-sulphonamide benzoic acid or ortho-sulphamido benzoic acid or ortho-sulphamine benzoic acid;

(7) Toluene ortho-sulphinic acid; and

(8) Sweetol, sucrose; crystallose; gluside, saccharol, saxin; glycosine; sykose; glusimide; garantose; glycophenol, saccharinol and saccharinose.

J. C. B. DRAKE,

Secy. to the Govt. of India (offg.).

RESOLUTION.

BENGAL PILOT SERVICE.

Simla, the 13th July 1931.

No. 226-P. & L./31.—The Governor-General in Council is pleased to nominate Mr. R. H. Hasluck of Messrs. Mackinnon Mackenzie and Company as the representative of European Commerce in Calcutta on the Advisory Pilot Committee, Bengal, *vice* Mr. A. O. Brown resigned.

ORDERED that this Resolution be published in the *Gazette of India*.

A. RAISMAN,

Joint Secy. to the Govt. of India (offg.).

ARMY DEPARTMENT.

Simla, the 18th July 1931.

Part B.

No. 445.—The following appointments are made:—

* * * *

The undermentioned officer designate of the Army in India Reserve of Officers is granted a temporary commission for the period noted against his name:—

The Calcutta Scottish.

To be Lt.

Lawrence George Burns. From 1st to 16th June 1931.

* * * *

CANTONMENTS—REGULATIONS.

No. 453.—The following draft of certain further amendments to the Cantonment Land Administration Rules, 1925, which it is proposed to make in exercise of the powers conferred by section 280 of the Cantonments Act, 1924 (II of 1924), is published as required by sub-section (1) of the said section for the information of all persons likely to be affected thereby, and notice is hereby given that the said draft will be taken into consideration on or after the 17th August 1931.

Any objection or suggestion which may be received from any person with respect to the draft before the said date will be considered by the Governor-General in Council.

Draft amendments.

(1) In rule 13 of the said Rules, after clause (13) the following clause shall be inserted, namely:—

"(13-A). **Grant of lease for construction of bungalows to be available for military officers.** —Notwithstanding anything contained in clauses (2) to (11) the Cantonment Authority may, with the previous sanction of the Government of India, or of such authority as the Government of India may appoint for this purpose, grant a lease of land in class B (4) by private treaty for the construction of a bungalow which will be suitable and always available for military officers. Applications for the grant of such lease shall be submitted to the Executive Officer of the Cantonment in the form prescribed in Schedule IV-A, and if the application is approved the applicant shall be required forthwith to execute a lease for the site in the form prescribed in Schedule VI-A."

(2) In clause (1) of rule 14 of the said Rules after the brackets and figures "(13)" the brackets, figures and letter "(13-A)" shall be inserted.

(3) After Schedule IV to the said Rules the following schedule shall be inserted, namely:—

SURVEY No.

SCHEDULE IV-A.

CANTONMENT AUTHORITY'S / MILITARY ESTATES OFFICER'S GRANT REGISTER.

(BUILDING SITES.)

(Form of application for land to be filled in by applicant.)

To

The Executive Officer,/The Military Estates Officer,

.....Cantonment.

Dated .....

SIR,

I have the honour to apply for the grant of (4000) acres/square feet of land situated in .....for the purpose of building a residential house.

A ground plan and description of the proposed building is attached.

I hold the following lands in the Cantonment.

I am prepared to abide by such conditions regarding the disposal of the land as the Cantonment Authority/Military Estates Officer may lay down, and to deposit the cost, if any, of surveying and demarcating the land, on the understanding that if the land is eventually granted to any other person the amount of my deposit will be refunded to me.

I request that the land may be granted to me by private agreement (without any preliminary auction) at Rs..... .....per acre/per square foot and I undertake to utilise the land for building bungalows which will be suitable and always available for Military officers and in consideration of this concession I agree to execute in respect of the land the special form of lease prescribed by Schedule VI-A, of the Cantonment Land Administration Rules, 1925.

I have the honour to be,

SIR,

Your most obedient Servant,

(Sd.) A. B. C.

NOTE.—The grant of this application does not carry with it sanction to erect a building. That sanction must be sought from the Cantonment Authority in accordance with the provisions of the Cantonments Act, 1924, and of any applicable bye-laws thereunder.

GRANTS REGISTER—BUILDING SITES.

(To be filled in by the prescribed authority, not the applicant.)

Survey No. and/or situation.	Class of land.	Total area of survey No., if any.

1. Date of application ..
2. Extent applied for ..
3. Name and address of applicant.
4. Purpose for which applied for.
5. Opinion of the Cantonment Authority./Military Estates Officer.

President./Military Estates Officer.

6. Date and cost of survey and demarcation and date of deposit of cost.
7. Annual rent fixed ..
8. Premium on lease ..
9. Opinion of Collector ..

Collector.

10. Order by G. O. C.-in-Chief/Govt. of India if value exceeds Rs. 5,000/Rs. 10,000.

G. O. C.-in-Chief .....Command./ Secretary to the Government of India, Army Department.

11. Date and No. of lease ..

Executive Officer /Military Estates Officer

PLAN OF THE SITE.

(Survey No. .)

(Sub-division .)

Area—

Surveyed and demarcated on the ground.

Cantonment Survey Officer.

(Sub-division entered in the Cantonment Map.)

Executive Officer/Military Estates Officer.

(4) After Schedule VI to the said Rules the following schedule shall be inserted, namely:—

SCHEDULE VI-A.

(Lease for construction of bungalows to be available for military officers.)

THIS INDENTURE made the day of BETWEEN THE SECRETARY OF STATE FOR INDIA IN COUNCIL (hereinafter called the Secretary of State) of the one part and (hereinafter called the lessee/lessees) of the other part WHEREAS by virtue of rules made under section 280 of the Cantonments Act, 1924, the Cantonment Authority/Military Estates Officer of Cantonment (hereinafter called the Cantonment Authority/Military Estates Officer) has agreed on behalf of the Secretary of State with the confirmation of to demise the plot of land hereinafter described to the lessee/lessees in manner hereinafter appearing, AND WHEREAS the said land is to be demised to the lessee/lessees on specially favourable terms on his undertaking that a house suitable for the residence of a military officer will be erected thereon by the lessee/lessees in accordance with the terms and conditions hereof and that the same will always be made available for the residence of a military officer if required and requisitioned under the provisions of the Cantonments (House-Accommodation) Act. NOW THIS INDENTURE WITNESSETH in consideration of the premium of Rs. paid on or before the execution of these presents (the receipt whereof the Secretary of State hereby acknowledges) and of the rent hereinafter reserved and of the covenants on the part of the lessee/lessees hereinafter contained the Secretary of State doth hereby demise unto the lessee/lessees ALL THAT plot of land containing by admeasurement situate at in the Cantonment of which said plot of land is more particularly described in the Schedule hereunder written and with the boundaries thereof is delineated on the plan annexed to these presents and thereon coloured TOGETHER with all rights easements and appurtenances whatsoever to the said plot of land belonging or in any wise appertaining EXCEPTING AND RESERVING unto the Secretary of State all mines minerals mineral substances of every description sand and clay in or under the premises hereby demised with full right and liberty at all times to do all acts and things which may be necessary or expedient for the purpose of searching for digging working obtaining removing and enjoying the same making the lessee/lessees reasonable compensation for all damage done and also all timber fruit-trees and other trees (but not the fruit or leaves or fallen branches of trees or branches of trees cut down with the written consent of the Cantonment Authority/Military Estates Officer) with right of entry to mark fell cut and carry away the same TO HOLD the premises hereby demised unto the lessee/lessees

for the term of thirty years from the
day of rendering therefor during
the said term the yearly rent of Rs.
clear of all deductions by equal half-yearly
payments on the
day of and the
day of
in each year at the office of the Cantonment Authority or such other place as the Cantonment Authority/Military Estates Officer shall from time to time appoint in this behalf the first of such payments to be made on the
day of
next

I. AND THE Lessee doth/Lessees do hereby covenant with the Secretary of State—

(1) To pay unto the Secretary of State during the term hereby granted the yearly rent hereby reserved on the days and in the manner hereinbefore appointed.

(2) From time to time and at all times during the said term to pay and discharge all rates taxes charges and assessments of every description which are now or may at any time hereafter during the said term be imposed charged or assessed upon the premises hereby demised or the buildings to be erected thereupon or the landlord or tenant in respect thereof.

(3) Not to cut down any of the timber fruit-trees or other trees now or at any time hereafter growing or standing on the premises hereby demised without the previous consent in writing of the Cantonment Authority/Military Estates Officer but to preserve the same in good order.

(4) Not to make any excavations in the land hereby demised or remove any minerals mineral substances of any description sand or clay from the said land without the consent in writing of and in accordance with the terms and conditions prescribed by the Cantonment Authority/Military Estates Officer.

(5) Within calendar months next after the date of these presents at his/their own cost to erect and finish fit for habitation/use on the premises hereby demised a *dwelling house* together with all necessary out-houses sewers drains and other appurtenances in accordance with a plan or plans to be approved in writing by the Cantonment Authority and not to erect or suffer to be erected on any part of the premises hereby demised any building other than and except the *dwelling house* hereby covenanted to be erected without the previous consent in writing of the Cantonment Authority.

(6) Not to make any alterations in the plan or elevation of the said *dwelling house* without such consent as aforesaid nor to use the same or permit the same to be used for any purpose other than that of a *dwelling house* without the consent of the Cantonment Authority/Military Estates Officer.

(7) At all times during the said term to keep the said *dwelling house* and premises in good and substantial repair and on the expiration or sooner determination of the said term peaceably to yield up the same in such good and substantial repair unto the Secretary of State.

(8) (Not to assign transfer or underlet the premises hereby demised or any part thereof without the consent in writing of the Cantonment Authority/Military Estates Officer and) upon every assignment transfer or sub-lease of the premises hereby demised or any part thereof or within one calendar month thereafter to deliver a notice of such assignment transfer or sub-lease to the Military Estates Officer setting forth the names and descriptions of the parties to every such assignment transfer or sub-lease and the particulars and effect thereof.

(9) Not to occupy the said *dwelling house* himself/themselves or allow others to occupy the same on his/their behalf to the intent that the same can always be requisitioned under the provisions of the Cantonments (House-Accommodation) Act for the time being in force.

II. PROVIDED ALWAYS that if any part of the rent hereby reserved shall be in arrear or unpaid for one calendar month next after any of the days whereon the same shall have become due whether the same shall have been demanded or not or it there shall have been in the opinion of the Cantonment Authority/Military Estates Officer any breach by the lessee/lessees or by any person claiming through or under him/them of any of the covenants or conditions hereinbefore contained then and in such case the Secretary of State may notwithstanding the waiver of any previous cause or right of re-entry enter upon any part of the premises hereby demised or of the buildings thereon in the name of the whole and thereupon the said premises and buildings shall remain to the use of and be vested in the Secretary of State and this demise shall absolutely determine and the lessee/lessees shall not be entitled to any compensation whatever.

III. PROVIDED ALSO that the Secretary of State will at the request and cost of the lessee/lessees at the end of the term of years hereby granted and so on from time to time thereafter at the end of each such successive further term of years as shall be granted execute to the lessee a new lease of the premises hereby demised by way of renewal for a term not exceeding thirty years but such renewed term of years as shall be granted shall not with the original term of years exceed in the aggregate the period of ninety years and such renewed leases shall be granted only at such rents within a percentage of enhancement of

fifty per cent. of the rent which shall have been reserved by any lease either original or renewed immediately preceding the renewed lease to be for the time being granted as the Secretary of State shall determine and save as to the amount of the rent to be thereby reserved and as to the term to be thereby granted every renewed lease of the said premises hereby demised shall contain such of the covenants provisions and conditions in these presents contained as shall be applicable.

IV. PROVIDED ALSO that the expressions "Secretary of State" and the lessee/lessees hereinbefore used shall unless such an interpretation be inconsistent with the context include in the case of the former his successors and assigns and in the case of the latter his heirs executors administrators representatives and assigns.

IN WITNESS whereof the parties have hereto set their hands the day and year first written above.

THE SCHEDULE above referred to.

(Name and description of officer signing.)	Signed by.....	Signature of officer signing.
	.....	
	.....	
	by the order and direction of the Governor General of India in Council acting in the premises for and on behalf of the Secretary of State in the presence of	
(Witness—Signature, Address, Description.)	.....	
	.....	
	.....	
(Name or names of lessee or lessees.)	Signed by the abovenamed.....	Signature(s) of lessee(s).
	.. ..	
	.....	
	.....	
	.....	
(First witness—Signature, Address, Description.)	in the presence of.....	
	.....	
	.....	
(Second witness—Signature, Address, Description.)	and.....	
	.....	
	.....	

G. M. YOUNG,
Secy. to the Govt. of India.

RAILWAY DEPARTMENT.

(RAILWAY BOARD.)

NOTIFICATION.

Simla, the 14th July 1931.

No. 7837-F.—In pursuance of sub-section (1) of Section 135 of the Indian Railways Act, 1890 (IX of 1890) the Governor General in Council is pleased to declare that the administration of the Eastern Bengal Railway shall be liable to pay in aid of the funds of the local authorities set out in the first column of the schedule annexed hereto the tax specified in the second column thereof.

Schedule.

Local authority.			Tax.
District.	Police-station.	Name of union board.	
Rajshahi ..	Godagari ..	Pakri.	
Do. ..	Do. ..	Matikata ..	Union rate.

J. F. BLACKWOOD,
Secretary, Railway Board.

The Calcutta Gazette

THURSDAY, JULY 30, 1931.

Part IB

Educational Notices.

Presidency Division.

NOTIFICATION.

40/1A, Free School Street, Calcutta, the 29th June 1931.

Test Examination of private candidates for the Matriculation Examination of 1932.

A Test Examination of private candidates will be held in the Senate Hall, Calcutta, from Monday, the 30th November 1931. *Such candidates only as reside in any of the districts of the Presidency Division, including Calcutta, will be admitted to the examination.* The term "private candidates" includes schoolmasters. A non-Bengali candidate should produce an affidavit sworn by his legal guardian before a Magistrate that the candidate has been in residence in any of the districts of the Presidency Division including Calcutta for at least one year before the date of the examination.

2. (*a*) Private candidates are those who have not attended any school, recognised or unrecognised, imparting general education for at least one year previous to the Matriculation Examination. They should produce proof that they have not attended any school for such period.

(*b*) They should also produce certificates of conduct and progress in studies from the authorities of the last school where they read, and also a certificate from other reliable authorities regarding conduct and progress in studies after leaving school.

(*c*) The transfer certificates granted to them by the authorities of the schools in which they studied last and the Registrar's receipt for the fee paid in the case of those candidates who previously appeared at the Entrance or the Matriculation Examination must be submitted in original along with the application for permission to appear at the Test Examination.

(*d*) A statement of the antecedents of the candidate should accompany his application. He should state whether he has read in any unrecognised school, and, if so, in what school and what year. A student, who failed to pass the annual examination for promotion to the first class at the end of the year 1930 and then left school, will in no circumstances be allowed to appear at the Test Examination of 1931.

3. *Bona fide* teachers employed in any of the schools in the Presidency Division may be admitted to the examination. They must produce certificates of service and character from their employers or from the District Inspector of Schools of the district concerned.

4. No one shall be admitted to the Matriculation Examination unless he has completed the age of fifteen years on the first day of the month in which the Matriculation Examination is held.

5. Each candidate should submit to the Inspector of Schools, Presidency Division, and *not to the undersigned personally*, not later than the 5th October 1931 (under no circumstances an application for permission to sit for the said examination will be entertained after the 3rd November 1931) his application for admission to the Test Examination, with the following particulars:—

(1) Age, (2) home district and residence, (3) father's name, (4) whether he appeared at any previous Entrance or Matriculation Examination, (5) classical language, (6) vernacular language, and (7) which two of the following optional subjects he has taken up:—

(*a*) Additional Mathematics.

(*b*) Additional paper in a classical language.

(*c*) History.

(*d*) Geography.

(*e*) Elementary Mechanics.

Candidates may only offer one of the following vernacular and classical subjects (compulsory or additional):—

Vernaculars—(*i*) Bengali, (*ii*) Hindi, (*iii*) Urdu, (*iv*) Alternative English for those whose vernacular is neither Bengali nor Hindi nor Urdu.

Classics (*i*) Sanskrit, (*ii*) Pali, (*iii*) Persian, (*iv*) Arabic.

6. The admission fee for the examination is Rs. 6 for each candidate. This must be remitted with the application on or before the prescribed date (5th October 1931), after which a fine of Rs. 2 will be imposed for each week's delay. This fee together with fine, if any, should be deposited into a Government Treasury or Sub-Treasury in Bengal and the chalan showing the deposit should be attached to the application which must reach this office on or before the prescribed date. *In no circumstances will the admission fee be refunded.* All examinees must obtain receipts for fees from the Inspector's office, which should be shown to the Superintendent of the Examination Hall on the first day of the examination.

7. No private student will be admitted to the Test Examination unless he is identified to the satisfaction of the Superintendent at the Examination Hall during the examination by a Government servant who is not in the inferior service or by a teacher in any recognised college or high school.

8. Candidates who are sent up by this office must appear at the Calcutta Examination centre.

9. Those who reside at a distance from Calcutta may, as special cases, be permitted to sit at the Test Examination at the nearest Government High English School. They will be supplied with printed question papers from this office to which their answer papers should be sent by the head master concerned.

10. The date of the Matriculation Examination in 1932 will be notified hereafter.

11. Applications and fees for admission to the examination must reach the office of the Registrar on or before the date to be fixed by the University.

12. Programme of Test Examination—

Monday, 30th November—

Morning—English Translation—10-30 a.m. to 1 p.m.

Afternoon—English Test and Grammar—1-30 p.m. to 4 p.m.

Tuesday, 1st December—

Morning—Compulsory Mathematics—10-30 a.m. to 1 p.m.

Afternoon—Vernacular language—1-30 p.m. to 4 p.m.

Wednesday, 2nd December—

Morning—Compulsory Classical language—10-30 a.m. to 1 p.m.

Afternoon—Additional Classical language—1-30 p.m. to 4 p.m.

Thursday, 3rd December—

Morning—History—10-30 a.m. to 1 p.m.

Afternoon—Additional Mathematics—1-30 p.m. to 4 p.m.

Friday, 4th December—

Morning—Geography—10-30 a.m. to 1 p.m.

Afternoon—Mechanics and Hygiene—1-30 p.m. to 4 p.m.

Intermediate and B.A. Examinations in 1932.

Subdivisional Inspectors, Sub-Inspectors and *bona fide* teachers of English schools in the Presidency Division, who have been employed as such for at least three years preceding the examination, will be admitted to the above examinations on production of certificates of character and length of service (with dates) from their employers. Laboratory assistants and demonstrators and librarians of affiliated colleges will be treated as teachers. *Their applications must reach this office on or before the 1st December 1931.*

1. In accordance with section 9, Chapter XV of the revised regulations dealing with the registration of University students, all candidates who intend to appear at any of the ensuing examinations of the University of Calcutta otherwise than as students of affiliated institutions, and who have applied for or have obtained the special permission of the Senate for the purpose, are required to apply to the Registrar of the Calcutta University for the registration of their names as University students. No person will be deemed a "University student" unless and until his name has been duly registered, and none but "University students" will be eligible for admission to any University examination other than the Matriculation. A registration fee of Rs. 2 must accompany every application.

2. Candidates for the B.A. Examination must send to the Inspector of Schools, Presidency Division, and *not to the undersigned personally*, their F.A., I.A., or I.Sc. certificates and candidates for the Intermediate Examination their Entrance and Matriculation certificates, together with a letter in original from the Senate of the Calcutta University, permitting them to appear at the examination.

3. Candidates should carefully read the printed form of application and supply all the information required by the University, including the Registrar's receipt in the case of those school-masters who were admitted to a previous examination of the same class.

4. The date of the Intermediate and B.A. Examinations in 1932 will be notified hereafter.

5. Applications with the countersignature of the undersigned and fees for admission to the above examinations must reach the *office of the Registrar on or before the dates to be fixed by the University*, and must be sent to that office by the candidates direct.

K. N. MITTER,
Inspector of Schools.

Burdwan Division.

Chinsura, the 7th July 1931.

Rules for the admission of Private Candidates to the Calcutta University Matriculation Examination, 1932.

1. Private students are those who have not attended any recognized or unrecognized High English School for at least one year previous to the Matriculation Examination. The term "private students" includes teachers of schools.

2. Private candidates must appear at the Test Examination to be held on Monday, the 14th December 1931, and the following days at any of the Government High Schools in the Burdwan Division.

3. Applications for admission to the Test Examination must be submitted through the head master of the school in which the applicant last read. The head master, in fowarding the application to this office, should note whether he recommends the application or not. If he does not, his reasons should be stated. The information to be given in, and the documents to be appended (in original) to, the application are the following:—

(*a*) Name of the school in which the candidate last studied.

(*b*) Transfer certificate (in original) granted to the candidate by the head master of the school in which he last read; or

In the case of a candidate who previously appeared at the Entrance or Matriculation Examination, the Registrar's receipt (in original) for the fee paid.

(*c*) Age of the candidate. No candidate is eligible who has not completed the age of fifteen years on the first day of the Matriculation Examination.

(*d*) In the case of school masters, a certificate of good conduct from the Secretary of the school in which the candidate is serving.

(*e*) A certificate from a respectable gentleman other than a relative to the effect that the candidate has prosecuted a regular course of study and has been subject to proper discipline, and that he has not read in any school since the last Matriculation Examination held in March 1931. Detailed information is needed under this head. The person granting the certificate should state his social or professional position.

(*f*) Names of subjects in which the candidate wishes to be examined.

(*g*) Postal address.

4. Each private candidate will have to pay a fee of Rs. 6, which should be remitted to the Inspector of Schools, Burdwan Division, Chinsura, along with his application for admission to the Test Examination by the 20th November 1931, after which date a fine of Rs. 2 will have to be paid for each week's delay. *Under no circumstance will the admission fee be refunded.* No private candidate will be admitted to the Test Examination, unless he is accompanied, for the purpose of identification, by some person known to the office of the Inspector of Schools, Burdwan Division, or to the staff of the Zilla School where he will appear. Those who are not *bonâ fide* residents of the Burdwan Division will not be admitted to the Test Examination.

5. **The fee for the Matriculation Examination should NOT be sent to this office.** It should be sent to the Registrar by the candidate himself, together with his countersigned application.

6. The Matriculation Examination for 1932 will be held on the 9th March 1932 and the following days or any other subsequent dates declared by the University.

INTERMEDIATE AND B.A. EXAMINATIONS.

1. Deputy Inspectors of Schools, Sub-Inspectors of Schools and *bonâ fide* teachers of English schools, who have served as such for the full period of three academical years preceding the examinations, will be admitted to the abovementioned examinations.

2. Candidates for the Intermediate and B.A. Examinations must produce certificates of character and length of service from the Secretaries of their respective schools. Candidates for the B.A. Examination must forward with their applications their F.A. or I.A. certificates, and those for the Intermediate Examination their Entrance or Matriculation certificates. Candidates admitted to a former examination must produce the Registrar's receipt in addition.

3. Under section 19 of the Indian Universities Act, candidates for the Intermediate and B.A. Examinations are informed that their applications for admission to these examinations will not be considered, unless they enclose with their applications to this office the sanction of the Senate to appear at the said examinations. Candidates, who have applied for or have obtained the special permission of the Senate for the purpose, are required, under section 9, Chapter XV of the Revised Regulations dealing with the registration of University students, to apply at once to the Registrar for the registration of their names as University students. No person will be deemed a "University student" unless and until his name has been duly registered, and none but "University students" will be eligible for admission to any University examination other than the Matriculation.

4. The printed form of application should be carefully and correctly filled in and submitted to this office on or before the 20th December 1931 at the latest, together with other papers as mentioned in rules 2 and 3, after which no application will be received.

5. The dates of Intermediate and B.A. Examinations of 1932 may be obtained from the Registrar, Calcutta University.

K. C. RAY,
Inspector of Schools.

Bengal Public Health Department.

NOTIFICATION No. 10140-A.

Calcutta, the 20th July 1931.

The undermentioned candidates are declared to have passed the Sanitary Inspectorship examination held in June 1931 and to be duly qualified for employment as Sanitary Inspectors in the Presidency of Bengal :—

(In order of merit.)

1 Hira Lal Mukhuti.
2 Shambhu Nath Mukharji.
3 Sailendra Prasad Ukil.
4 Ramani Ranjan Shaha.
5 Mana Ranjan Khan.
6 Jagadananda Konar.
7 Sishir Kumar Mukharji.
8 Bireswar Banarji
9 Shyama Kinkar Mukharji
10 Hemendra Nath Chattarji.
11 Suresh Chandra Biswas.
12 Purna Govinda Chaudhury.
Ram Ballav Chakravarti.
14 Sukumar Basu
15 Kali Charan Banarji.
16 Rajendra Mohan Nath.
17 Ritendra Nath Ray.
18 Kali Prasad Bhattacharji.
Hemanga Bhushan Chakravarti.
20 Rajani Kanta Chattarji.
Bimal Kumar Ghosh.
22 Sailaja Ranjan Mukharji.
23 Sudhanshu Bikash Batabyal.
24 Muhammad Abdul Ghani.
25 Sachindra Nath Mukhuti.
26 Bibhuti Bhushan Ghosh
27 Tarak Bandhu Bhaumik.
28 Jyotirmay Sarkar.
29 Kumarendra Kumar Trivedi.
30 Kishori Lal Khan Karmakar.
31 Satya Ranjan Das Gupta.
32 Sachindra Bijay Chaudhury.
33 Mir Muhammad Israil.
34 Panchanan Mukharji.
35 Muhammad Rahimuddin Talukdar.
36 Jamini Bhushan Sarkar.
37 Ramsingh Mukhya.
38 Amalendu Lal Ray.

R. B. KHAMBATA, M.R.C.S. (Eng.), L.R.C.P. (Lond.), D.P.H. (Camb.),

Director of Public Health, Bengal (offg.).

Orders by the Vice-Chancellor and Syndicate of the Calcutta University.

NOTICE.

Senate House, the 23rd July 1931.

The following are the subjects selected for the essays in competition for the Jubilee Research Prizes in Arts and Science for 1933 :—

Literary Subject.

"Popular Rights and Royal Prerogatives in Ancient India."

Scientific Subject.

"Chemical and Physical study of coal of Bengal, Behar, Orissa and Chota-Nagpur."

Two prizes shall ordinarily be awarded every year. Each prize shall consist of a gold medal of the value of Rs. 150 and a sum of Rs. 350 in cash. One prize shall be awarded for research in the Arts subject and another for research in the Science subject.

The prizes will be open to all persons who have at any time been admitted to a degree of this University.

The theses for the above prizes for 1933 are to be sent privately to the undersigned not later than the 30th June 1933. Every thesis must bear a motto, but not the name of the candidate, and must be accompanied by sealed envelope bearing the same motto outside and containing inside the name and address of the candidate.

Every candidate shall indicate, generally in a preface to his thesis and specially in notes, the sources from which his information is taken, the extent to which he has availed himself of the work of others, and the portions of the thesis which he claims as original; he shall further state whether his research has been conducted independently, under advice, or in co-operation with others and in what respects his investigations appear to him to tend to the advancement of knowledge.

No thesis which has been approved previously for any other degree, prize or medal will be accepted.

N. SEN,

Controller of Examinations.

NOTIFICATION

Senate House, the 17th July 1931.

It is hereby notified for general information that the Government of Bengal, in the Ministry of Education, are pleased to order that, with effect from the commencement of the session 1930-31, the College Dupleix, Chandernagore, shall be affiliated to the Calcutta University in English, Bengali, French, Sanskrit, History, Logic, Elements of Civics, Physics, Chemistry and Mathematics to the I.A. and I.Sc. Standards.

A. N. MUKHERJEE, *Registrar.*

Board of Intermediate and Secondary Education, Dacca.

NOTIFICATIONS.

Ramna, Dacca, the 10th July 1931.

No. 3438.—It is hereby notified for the information of authors and publishers that the Standing Committee in Islamic Studies of the Board is likely to meet about the middle of August next to consider text-books in Urdu, Arabic Literature (prose and poetry), Arabic Grammar and Composition, Islamic History, Fiqh and Aqaid for classes VII and VIII of High Madrasas in Bengal for the year 1932. They are invited to forward to this office five copies of any books that they may have to offer for consideration of the Committee as text-books.

No. 3450.—It is hereby notified for the information of authors and publishers that the various Standing Committees of the Board are likely to meet this year about the middle of August next to consider text-books for the High School and Intermediate Examinations to be conducted by the Board in 1934. They are invited to forward to this office five copies of any books that they may have to offer for consideration of the Committees either as text-books or as books recommended for guidance.

Ramna, Dacca, the 8th July 1931.

No. 3401.—The following students are awarded Junior Scholarships on the results of the High School Examination, 1931, conducted by the Board of Intermediate and Secondary Education, Dacca. The scholarships take effect from the 1st June 1931, and are tenable for two years.

(Principals of Colleges are requested to report to the Secretary, Board of Intermediate and Secondary Education, Dacca, the names of the holders of scholarships as soon as they are admitted. No scholarship can be drawn until this information is available):—

Special Scholarships for girls.

One of Rs. 20 a month.

Kamrunnessa Girls' School.

Banalata Guha.

One of Rs. 15 a month.

Eden Intermediate College.

Subrata Sengupta.

Two of Rs. 10 a month each.

Eden Intermediate College.

Manika Ray.
Bibharani Sengupta.

Ramna, Dacca, the 14th July 1931.

Special Scholarships, 1931.

No. 3544.—The following students are awarded the above scholarships on the results of the High Madrasa Examination, 1931, conducted by the Board of Intermediate and Secondary Education, Dacca. The scholarships take effect from the 1st June 1931, and are tenable for two years only at the Islamic Intermediate Colleges under the Board.

(Principals of Islamic Intermediate Colleges are requested to report to the Secretary to the Board of Intermediate and Secondary Education, Dacca, the names of the holders of scholarships as soon as they are admitted No scholarship can be drawn until this information is available):—

Six Scholarships of Rs. 12 a month each.

Islamic Intermediate College, Dacca.

Hafiz Ahmad.

Nasirabad Madrasa.

Syed Abdul Halim.

Chittagong Islamic Intermediate College.

Muhammad Fauzul Kabir.

Chandpur Nuria Madrasa.

Abul Khair Muhammad Abdul Latif.

Pakundia Madrasa.

Abul Fazl Muhammad Badruzzaman Pathan.

Islamic Intermediate College, Dacca.

Muhammad Amirul Haq.

A. RAHMAN, *Secretary.*

The Calcutta Gazette

THURSDAY, JULY 30, 1931.

Part II

Advertisements.

Notices.

Advertisements, Notices, etc., intended for insertion in this Part of the Gazette cannot be received after noon of Saturday.

IMPERIAL BANK OF INDIA.

Statement of the affairs of the Imperial Bank of India on the 17th July 1931.

LIABILITIES.

	Rs.	A.	P.
Subscribed Capital ..	11,25,00,000	0	0
Capital paid up ..	5,62,50,000	0	0
Reserve ..	5,42,50,000	0	0
Public Deposits ..	16,26,16,000	0	0
Other Deposits ..	65,00,71,000	0	0
Loans against securities per contra ..	....		
Loans from the Government of India under section 20 of the Paper Currency Act, against Inland bills discounted and purchased per contra ..	....		
Contingent liabilities ..	....		
Sundries ..	1,09,36,000	0	0
	93,41,23,000	0	0

ASSETS.

	Rs.	A.	P.
Government Securities ..	28,78,30,000	0	0
Other authorized securities under the Act ..	2,76,60,000	0	0
Ways and Means Advances to the Government of India ..	....		
Loans ..	9,71,54,000	0	0
Cash Credits ..	28,65,04,000	0	0
Inland bills discounted and purchased ..	3,73,38,000	0	0
Foreign bills discounted and purchased ..	45,64,000	0	0
Bullion ..	....		
Dead stock ..	2,72,17,000	0	0
Liability of constituents for contingent liabilities per contra ..	....		
Sundries ..	35,62,000	0	0
Balances with other Banks ..	28,50,000	0	0
	77,46,97,000	0	0
Cash ..	15,94,26,000	0	0
	93,41,23,000	0	0

The above balance sheet includes :—

	£
Deposits in London ..	1,010,400
Advances and Investments in London ..	913,700
Cash and balances at other Banks in London ..	217,200

Percentage 19·35.

Bank rate 6 per cent.

OSBORNE A. SMITH,
K. M. MACDONALD,
Managing Governors.

LAND SALE NOTICE.

Notification A.

NOTICE is hereby given, under sections 6 and 13, Act XI of 1859, that the undermentioned estates and shares of estates in the district of Nadia will be put up for sale at the office of the Collector of that district on 25th September 1931, at 12 noon, for arrears of revenue and other demands which by law are realizable as arrears of land revenue :—

Tauzi No	Name of mahal and pargana	Sadar jama of whole estate.	Whether the whole estate is to be sold	If only a share is to be sold, specification of such share or shares.	Names of proprietors of property to be sold	If only a share is to be sold, the sadar jama of such share	If the whole estate is to be sold, the arrears due from it	If only a share is to be sold, the arrears due from it.
1	2	3	4	5	6	7	8	9
		Rs. A. P.				Rs. A. P.	Rs A. P	Rs A. P.
491	Sadipur, pargana Rajpur.	18,263 14 9	Whole ..	....	Bhujendra Nath Biswas and others	..	678 4 7	..
490	Uthali, pargana Shahauzlal	711 0 10	Do ..	....	Jatindra Nath Basu and others	..	114 1 11	..
218	Gopalpur, pargana Shahauzlal	2,176 0 5	Do ..	....	Bilas Roy Agarwala and others	..	77 13 10	..
8782	Diara mahal char Abdulpur and others, pargana Begamabad	655 0 0	Do. ..	....	Sourendra Krishna Sinha and others	..	4,085 12 0	..

Krishnagar, the 20th July 1931.

R. S. BHATTACHARJI, *for* Collector of Nadia.

In the 2nd Court of Senior Munsif, Contai, district Midnapore.

MONEY EXECUTION CASE No. 118 OF 1930.

Date of sale—15th September 1931.

Mritunjoy Misra Nyayratna, decree-holder,

versus

Tribikram Misra, judgment-debtor
Babu N C Baksi, pleader for decree holder
Babu B N Maity, pleader for judgment-debtor

THE undermentioned property will be sold by public auction at noon on the 15th September 1931 at the Contai Senior Munsif's sale room by the Nazir for recovery of Rs 888 due in a money decree No. 424 of 1924 of the 2nd Munsif's Court, Contai, district Midnapore :—

Schedule of property.

District Midnapore, thana Ramnagar, pargana Bhograi.
(1) Mauza Baksispur, plots 1 to 7, bahali No 108, B No 454, C No 785 = 7 cottahs and 10 gandas
Plot 8, bahali No. 1471, B No 3766 = 13 chittaks
Plots 9 and 10, khata No 29, khebat (13/1), nispi No 7540 = 3 cottahs and 11 chittaks.
Plots 11 to 13, khata No 30, khebat 13/2 = 3 cottahs
Plots 14 to 16, khata No 32, khebat 13/4 = 2 cottahs and 14 chittaks.
(2) Mauza Katmundi, plot No. 17, niskar bahali No. 290, khebat No 15, nispi No. 11875, khata No. 45 = 4 cottahs and 10 chittaks
(3) Mauza Bhumajibarh, plot No. 18, bahali No. 1684, B No. 3342, C. No 3805 = 5 cottahs and 8 chittaks.
Total 1 bigha 7 cottahs 8 chittaks and 10 gandas.
Given under my hand and seal of this Court, the 16th July 1931.

INDU SEKHAR BASU, Senior Munsif.

(1538—1)

In the 1st Court of the Sub-Judge, Bakarganj.

TITLE EXECUTION No 47 OF 1931.

Sachindra Nath Mukherjee, Pleader, Receiver to the Bhukailas Debatra Estate, decree-holder

versus

Hemkanta Sen Ray Chaudhury and others, judgment-debtors

THE following properties of the judgment-debtors will be sold in auction sale in the sale room of this Court, on the 12th day of August 1931 at 12 o'clock in the forenoon for recovery of Rs 50,376-13-3 :—

Properties.

Within district Bakarganj, subdivision Perojpur, police-station Mathbaria and pargana Bojrong Umedpur, Lapta Abad Chak Jnanpara, there is a taluq No. 4900 acquired by auction and by purchase, khewat No 1, 19 gds 1 kara 1 kranti 10 tils share of which is owned by Upendra Nath Sen, 19 gds 1 kara 1 kranti 10 tils by Narendra Nath Sen and 1 anna 18 gds 3 karas by Babu Hem Kanta Sen, the annual rental of which is Rs 1,056-8-1 p in entire 3 annas 17 gds. 2 karas share.

P. N. CHAUDHURI, Sub-Judge

Barisal, the 18th July 1931 (1564—1—1553)

In the High Court of Judicature at Fort William in Bengal, in Insolvency.

NOTICE OF ADJUDICATION ORDER.

No. 172 OF 1931.

Re Robert Reginald Beddoe, residing at 5, Blockman Street, in the town of Calcutta, and working as a canvasser under Messrs Kilburn & Co, of 4, Fairlie Place, in Calcutta aforesaid, *ex parte* the debtor in person.

ON the 13th day of July 1931, an order was made by the High Court of Judicature at Fort William in Bengal in its insolvency jurisdiction adjudging the abovenamed as an insolvent.

NOTE.—All debts due to the estate should be paid to me.

Dated this 18th day of July 1931.

G. M. FALKNER, Official Assignee.

In the High Court of Judicature at Fort William in Bengal, in Insolvency.

NOTICE OF ADJUDICATION ORDER.

No. 173 OF 1931.

Re Lawrence Archibald Monnier, residing at 25, Dixon Lane, in the town of Calcutta, at present working as assistant yard master under the East Indian Railway at Howrah, *ex parte* the debtor in person.

ON the 15th day of July 1931, an order was made by the High Court of Judicature at Fort William in Bengal in its insolvency jurisdiction adjudging the abovenamed as an insolvent.

NOTE.—All debts due to the estate should be paid to me.

Dated this 18th day of July 1931.

G. M. FALKNER, Official Assignee.

In the High Court of Judicature at Fort William in Bengal, in Insolvency.

NOTICE OF ADJUDICATION ORDER.

No. 174 of 1931.

Re Clifford Reynolds, lately residing at P. 228, New Circular Road, but at present residing at No. 4, Turner Street, in the town of Calcutta, and lately employed by Messrs. Jessop and Company, Limited, at No. 93, Clive Street, Calcutta, at present of no occupation, *ex parte* the debtor in person.

ON the 15th day of July 1931, an order was made by the High Court of Judicature at Fort William in Bengal in its insolvency jurisdiction adjudging the abovenamed as an insolvent.

NOTE.—All debts due to the estate should be paid to me.

Dated this 18th day of July 1931.

G. M. FALKNER, Official Assignee.

In the High Court of Judicature at Fort William in Bengal, in Insolvency.

No. 29 of 1927.

Estate Ranchore Das Murarjee.

(Private estate of Gokuldas.)

NOTICE is hereby given that a dividend is intended to be declared in the above estate by the 20th proximo.

Persons claiming to be creditors of the above estate are hereby required to lodge their claims supported by affidavit and necessary vouchers by the 31st instant, after which date claims received by this office will not be considered.

Persons who have already lodged their claims need not file any fresh claim.

A form of proof of debt may be had on application.

G. M. FALKNER, Official Assignee.

10, Old Post Office Street, Calcutta, 17th July 1931.

(1540—1)

In the Court of the District Judge of Burdwan.

INSOLVENCY CASE No. 19 of 1931.

NOTICE is hereby given to the creditors that the insolvency petition filed by the debtor Ram Darpa Halder, son of late Krishna Chandra Halder of Kaithan, police-station Katwa, district Burdwan, has been admitted and that the 21st day of August 1931 has been fixed for hearing of the petition.

J. DE, District Judge.

Burdwan, the 22nd July 1931. (1549—1—1552)

ORDER ANNULLING ADJUDICATION.

Section 27 of the Provincial Insolvency Act, V of 1920.

In the Court of the District Judge at Chittagong.

INSOLVENCY APPLICATION No. 11 of 1931.

PURSUANT to a petition, dated the 24th March 1931, filed by Durga Kinkar Bhattacharjee, son of late Bhairab Ch. Bhattacharjee of Khandakia, police-station Hathazari, Chittagong, and on the application of petitioner and on reading the petition and hearing the pleader, it is ordered that the debtor be and the said debtor is hereby adjudged insolvent.

He is directed to apply for his discharge by 2nd February 1932.

Dated this 30th day of June 1931.

J. YOUNIS, District Judge.

(1466—1—1538)

ORDER OF ADJUDICATION.

Section 27 of the Provincial Insolvency Act, V of 1920.

In the Court of the District Judge at Chittagong.

INSOLVENCY APPLICATION Nos. 31, 35, 36, 37, 38, 39, 40, 44, 45 and 46 of 1923.

PURSUANT to petitions, dated 7th September 1923, 22nd September 1923, 29th September 1923, 3rd October 1923 and 8th October 1923, against (1) Har Gobinda Sil (since deceased), (2) Gangadas Sil (since deceased), (3) Gurudas Sil, sons of Muraridhar Sil of Rashangiri, police-station Phatikchary, Chittagong, and on the application of (1) Durga Kumar Kanungo, son of Kali Kinkar Kanungo, (2) Anukulbihari Das, son of late Gopinath Das, (3) Chintaharan Chakrabarty, son of late Srinath Chakrabarty, (4) Surendra Chandra Ghosal, son of late Nanda Kumar Ghosal, (5) Digendra Chandra Ghosal, son of late Nanda Kumar Ghosal, (6) Sitanath Chakrabarty, son of late Ishan Ch Siromani, (1) to (3) and (6) of Sadar Ghat, and (4) and (5) of Strand Road, Chittagong, (7) Charu Chandra Muhuri, son of late Radha Krishna Mahajan, of Rashangiri, (8) Gour Chandra Deb, son of late Kebal Krishna Deb, of Rashangiri, (9) Nabin Chandra Das, son of Ram Ch. Das, of Rashangiri, Chittagong, and on reading the petitions and hearing the pleaders of both sides, it is ordered that the debtors be and the said debtors are hereby adjudged insolvent.

They are directed to apply for their discharge by 10th October 1931. Mr. J. R. Parcival is appointed receiver in all cases.

Dated this 10th day of April 1931.

J. YOUNIS, District Judge.

(1467—1 -1539)

NOTICE TO CREDITORS OF THE DATE OF HEARING OF AN INSOLVENCY PETITION.

Section 19 of the Provincial Insolvency Act, V of 1920.

In the Court of the District Judge at Chittagong.

INSOLVENCY APPLICATION No. 21 of 1931.

WHEREAS Ramesh Chandra Acharjee, son of Gour Chandra Acharjee, of Shakpura, police-station Boalkhali, Chittagong, has applied to this Court, by a petition, dated 1st day of May 1931, to be declared an insolvent under the Provincial Insolvency Act, V of 1920, this is to give notice to his creditors that the Court has fixed the 28th day of August 1931 for the hearing of the aforesaid petition and the examination of the debtor.

J. YOUNIS, District Judge.

(1484—1)

NOTICE TO CREDITORS OF THE DATE OF HEARING OF AN INSOLVENCY PETITION.

Section 19 of the Provincial Insolvency Act, V of 1920.

In the Court of the District Judge at Chittagong.

INSOLVENCY APPLICATION No. 18 of 1931.

WHEREAS Khalilor Rahoman, son of late Safor Ali, of Kandakiya, has applied to this Court by a petition, dated 6th day of May 1931, to be declared an insolvent under the Provincial Insolvency Act, V of 1920, this is to give notice to his creditors that the Court has fixed the 28th day of August 1931 for the hearing of the aforesaid petition and the examination of the debtor.

J. YOUNIS, District Judge.

(1480—1—1537)

In the Court of the District Judge of Dacca.

INSOLVENCY CASE No. 29 of 1931.

Messrs. Gopinath Nandahari Basak and others, petitioning creditors,

versus

Brindaban Chandra Das Basak, debtor, opposite party.

WHEREAS (1) Messrs. Gopinath Nandahari Basak, sometimes known as Gopinath Nandahari Kokaram Basak, (2) Messrs. Banamali Krishna Bandhu Basak, carrying on their business at Bhataru, police-station Saturia, post-office Baliati, district Dacca, and at Kalachand's Akhara in Lalchand Makim's Lane, police-station Sutrapur, district Dacca, and (3) Messrs. Gobinda Behari Mahananda Basak, carrying on their business at Beliswar, post-office Saha Beliswar, police-station Dhamrai, district Dacca, and at Swari Ghat, Chowk Bazar, police-station Lalbagh, district Dacca, creditors, have applied to this Court for adjudging Brindaban Chandra Das Basak, son of late Harish Chandra Das Basak, resident of North Nawabpur, police-station Sutrapur, district Dacca, the 12th August 1931 next has been fixed for the hearing of the aforesaid petition and objection by the debtor.

A. G. R. HENDERSON, District Judge.

Dacca, the 18th July 1931. (1543—1)

In the Court of the District Judge of Jalpaiguri.

INSOLVENCY CASE No. 18 OF 1931

AMEZAJ MAHAMMAD, son of Dhantulla Mahammad of village Kharia Brahmatal, police-station and district Jalpaiguri, has been adjudged insolvent on the 7th July 1931. He must apply for discharge within one year.

H. G. WAIGHT, District Judge.

Dinajpur, the 16th July 1931. (1507—1)

In the Court of the District Judge of Hooghly.

INSOLVENCY PETITION No. 84 OF 1930.

NOTICE is hereby given that Panchanan Nandy, son of late Ashutosh Nandy, of Hat Basantapur, thana Arambagh, district Hooghly, was on the 8th day of July 1931 adjudged an insolvent. The 12th day of August 1931 has been fixed for framing a schedule and creditors are required to prove their claims on that day.

S. SEN, District Judge.

Chinsura, the 13th July 1931. (1512—1—1532)

In the Court of the District Judge of Hooghly.

INSOLVENCY PETITION No. 21 OF 1931.

NOTICE is hereby given that Bagala Charan Ghose, son of late Gayaram Ghose of Betra, thana Goghat, district Hooghly, was on the 8th day of July 1931 adjudged an insolvent. The 12th August 1931 has been fixed for framing a schedule and creditors are required to prove their claims on that day.

S. SEN, District Judge.

Chinsura, the 14th July 1931. (1561—1—1554)

In the Court of the District Judge of Hooghly.

INSOLVENCY PETITION No. 20 OF 1931.

NOTICE is hereby given that Sasi Bhusan Marik, son of Preo Nath Marik of Borighati, thana Chanditola, district Hooghly, was on the 8th day of July 1931 adjudged an insolvent. The 12th day of August 1931 has been fixed for framing a schedule and creditors are required to prove their claims on that day.

S. SEN, District Judge.

Chinsura, the 14th July 1931. (1562—1—1555)

In the Court of the District Judge of Hooghly.

NOTICE is hereby given, under clause (2) of section 12 of the Provincial Insolvency Act, V of 1920, to his creditors that the discharge petition of Nagendra Nath Seal, son of late Kedar Nath Seal, of Rasidpur, thana Jangipur, district Hooghly, has been filed in this Court in Insolvency No. 68 of 1930, and that the 15th August 1931 has been fixed for the hearing thereof.

S. SEN, District Judge.

Chinsura, the 15th July 1931. (1563—1—1556)

In the Court of the Addl. Sub-Judge, Malda.

INSOLVENCY CASE No. 4 OF 1931.

NOTICE is hereby given under the Provincial Insolvency Act, V of 1920, to his creditor that the petition of Madhu Sudan Saha, son of late Shree Charan Saha of Iaho, police-station Habipur, district Malda, has been admitted by this office in Insolvency Case No. 4 of 1931 and that the 1st day of August 1931 has been fixed for hearing thereof.

N. N. GUHA, Addl. Sub-Judge.

Malda, the 6th July 1931. (1532—1)

In the Court of the District Judge of Murshidabad.

INSOLVENCY CASE No. 33 OF 1931.

In the matter of Gopal Chandra Ghosh, son of late Pulin Chandra Ghosh, of Raghunathgunj, police-station Raghunathgunj, district Murshidabad, debtor-petitioner.

NOTICE is hereby given to all concerned that the abovenamed debtor has applied to this Court for being adjudged an insolvent and that 15th day of August 1931 has been fixed for hearing of his petition.

A. F. M. RAHMAN, District Judge.

Berhampore, the 20th July 1931. (1551—1—1551)

In the Court of the District Judge of Nadia.

INSOLVENCY CASE No. 17 OF 1931.

Petitioner Bepin Chandra Choudhury, son of late Dhananjoy Choudhury, of Khoksa, police-station Khoksa, district Nadia.

NOTICE is hereby given, under clause 2 of section 19 of the Provincial Insolvency Act, V of 1920, to his creditors that the abovenamed petitioner has filed an insolvency petition and that 15th August 1931 has been fixed for the hearing thereof.

S. N. MODAK, District Judge.

Krishnagar, the 18th July 1931. (1514—1)

In the 4th Court of the Sub-Judge of 24-Parganas.

INSOLVENCY CASE No. 212 OF 1931.

Mritunjoy Mojumdar, of Ullaipara Lane, Kasba, post-office Dhakuria, 24-Parganas, applicant.

To Bombay Radio Co., Ltd., of 43-1D, Dharramtolla Street, Calcutta, and others, creditors.

ON the 9th day of June 1931 it was ordered that the matter of the petition of the applicant be heard on the 10th day of August 1931 and that the said applicant do attend to be examined by this Court on that date.

S. N. ROY, Sub-Judge.

Alipore, the 11th June 1931. (1331—1—1531)

In the 4th Court of the Sub-Judge of 24-Parganas.

INSOLVENCY CASE No. 199 OF 1931.

Pratul Gopal Chakravarty of 31, Harish Mukerjee Road, police-station Bhowanipore, applicant.

To Ballav Chand Boral of No. 2, Siddheswar Lane, Bowbazar, Calcutta, and others, creditors.

ON the 22nd day of June 1931, it was ordered that the matter of the petition of the applicant be heard on the 3rd day of August 1931 and that the said applicant do attend to be examined by this Court on that date.

S. N. ROY, Sub-Judge.

Alipore, the 24th June 1931. (1380—1—1533)

NOTICE TO CREDITORS OF APPLICATION FOR DISCHARGE.

Section 41(1) of the Provincial Insolvency Act, V of 1920.

In the Court of the District Judge at Alipore.

INSOLVENCY CASE No. 24 OF 1930.

Hrishikesh Kabustri of Jadurhati, Baduria, 24-Parganas, applicant.

TAKE notice that the abovenamed insolvent has applied at the Court for his discharge, and that the Court has fixed the 17th day of August 1931, at 11 o'clock, for hearing the application.

Dated this 13th day of July 1931.

R. R. CARLICK, District Judge.

(1492—1—1549)

ASHOKE NATH MUKHERJI, B.L., M.SC., intends to be enrolled as an Advocate, Calcutta High Court.

(1536—4—1536)

BISNURAM MEDHI, M. SC., B.L., of Gauhati, intends to be enrolled as an Advocate, High Court, Calcutta.

(1541—4—1540)

BABU JITENDRANATH GUHA, M.A., B.L., intends to be enrolled as an Advocate, High Court, Calcutta.

(1478—4—1470)

JOGESCHANDRA DE, B.L., intends to practise as an Advocate, Calcutta High Court.

(1487—4—1489)

KALYAN KUMAR BASU, M.A., B.L., intends to be enrolled as an Advocate, Calcutta High Court.

(1488—4—1504)

MR. NRIPENDRANATH DUTTA RAY, B.SC., B.L., wants to be enrolled as an Advocate of the High Court.

(1485—4—1487)

MR. KAMALES CHANDRA SEN, M.A., B.L., intends to enroll himself as an Advocate, Calcutta High Court.

(1498—4—1508)

MR. MONINDRA CHANDRA NIYOGY intends to be enrolled as an Advocate of the Calcutta High Court.

(1502—4—1512)

MR. RAMKRISHNA PAL, B.L., intends to be enrolled as an Advocate of the Calcutta High Court.

(1509—4—1509)

MR. KASHI NATH MITTER intends to practise as an Advocate in the High Court, Calcutta.

(1510—4—1510)

MR. SAMBHU NATH BANERJEE, M.A., B.L., wants to be enrolled as an Advocate of the Calcutta High Court.

(1511—4—1531)

MR. DHIRENDRA NATH GUHATHAKURTA intends to be enrolled as an Advocate, Calcutta High Court.

(1537—4—1537)

MR. DEBENDRA NATH DATTA intends to be enrolled as an Advocate of the High Court, Calcutta.

(1545—4—1542)

MR. DHIRENDRA MOHAN DEB, B.L., intends to enroll himself as an Advocate of the Calcutta High Court.

(1558—4—1546)

MR. ATINDRA NATH BHADRA, B.L., intends to enroll himself as an Advocate of the Calcutta High Court.

(1559—4—1547)

RAJENDRA NATH BHATTACHARYYA, M.A., B.L., intends to be enrolled as an Advocate of the High Court.

(1542—4—1548)

NOTICE is hereby given that Mr. Bhuramal Agrawal, of No. 19, Tarachand Dutt Street, Calcutta, who was lately under Articles of Clerkship to Mr. Sanat Kumar Chatterji, Advocate, intends to apply to be admitted as an Advocate of the High Court of Judicature at Fort William in Bengal.

Dated this 17th day of July 1931.

(1535—4—1535)

WANTED a Professor of English for the Bethune College, Calcutta, in the Women's branch of the Bengal Educational Service.

Candidates should be British subjects and either be First or Second Class M. A. of an Indian University or should hold a good Honours degree of a European University and should have satisfactory teaching experience.

Applications supported by documentary evidence of the qualifications possessed will be received up to the 15th August 1931 by the Principal, Bethune College, Calcutta.

WANTED a head master for a Government High School in Bengal in the Men's Branch of the Bengal Educational Service.

2. Candidates, who should be British subjects and not over 45 years of age, must possess a first class degree as M. A. or M. Sc. of an Indian University, or Honours degree (or corresponding qualification) of a European or American University. They must also possess a degree in teaching of an Indian University or a diploma or degree in teaching of a European or American University.

3. Candidates must produce evidence of an outstanding capacity for developing the corporate life of a school, of power of maintaining discipline, of capacity for control, and of a satisfactory record of teaching experience.

4. Canvassing will be regarded as a disqualification.

5. Applications with documentary evidence of the qualifications possessed will be received up to 30th August 1931 by the Assistant Director of Public Instruction, Bengal, Writers' Buildings, Calcutta.

WANTED a graduate Head Clerk and Accountant for the Dacca Intermediate College in the scale of Rs. 80—5—120, with good experience in office work, knowledge of typewriting and specially well-up in correspondence and accounts. The vacancy is temporary for one year with prospect of being made permanent. Preference will be given to a suitable Moslem candidate. Applications will be received by the Principal, Dacca Intermediate College (post-office Ramna), up to the 3rd August 1931.

Imperial Bank of India.

THE annual general meeting of the shareholders on the Calcutta Register of the Imperial Bank of India will be held at the Calcutta local head office on Monday, the 24th August 1931, at 10 A M.

By order of the Central Board,

M. G. STUART,

Secretary and Treasurer.

Calcutta, the 23rd July 1931. (1569—1)

THE Bengal and Madras Service Family Pension Fund which is provisionally managed and assisted by Government has for its object the provision of monthly pensions for the maintenance of the widows and children of subscribers and is open, with certain exceptions, to all active and pensioned members of the Uncovenanted service of Government (except those serving under the Government of Bombay), and to Local Fund servants earning pensions from Government. Some of the special features of the fund are—(1) that widowed daughters incapable of remarriage or children labouring under such mental or bodily infirmities as incapacitate them from earning their livelihood or preclude the possibility of marriage (in caseof a daughter) are admitted to its benefits; and (2) that subscribers to the Widows' and Daughters' branches are entitled to a refund of 50 per cent. of the premia paid, should the nominee predecease them after five years of admission. The second quinquennial valuation of the Fund has been completed by the actuary to the Government of India, and his report discloses very favourable results. For forms of application and rules of the Fund apply to the Accountant-General, Bengal, Imperial Secretariat Buildings, Calcutta.

The Commissioners for the Port of Calcutta.

NOTIFICATION No. 94.

IT is hereby notified for general information under the provision of section 107 of the Calcutta Port Act, III (B. C.) of 1890, and with the approval of the Local Government that on and after the 1st of July 1931 the freight charges notified under section 14 of the Commissioners' scales of charges will be reduced in the case of jute, cotton, hemp and all fibres in bales removed from any point north of Howrah Bridge on the Port Trust Railway to any point in the Dock area to 6 annas per ton or part of a ton or Rs. 2-8 per axle at the Commissioners' option if the goods are removed at owner's risk, and to 10 annas a ton or part of a ton or Rs. 3-12 per axle at the Commissioners' option if the goods are removed at the Commissioners' risk.

By order of the Commissioners,
C. W. T. HOOK, Secretary (offg.).

The 15th July 1931. (1539—1)

Notice to Creditors.

Estate Robert Robertson, M.B., C.M., deceased.

PURSUANT to section 360 of Act XXXIX of 1925 and section 42 of Act XXVIII of 1866, the creditors and all persons interested in the estate of Robert Robertson, M.B., C.M., late of Kano, Florence Drive, Kilmacolm, Renfrewshire, Scotland, who died at that address on or about the 4th day of August 1930, and Letters of Administration, with copy Will annexed, to whose estate were, on the 6th day of July 1931, granted by the High Court, Calcutta, with effect within the Province of Bengal, to Douglas Horsford Wilmer of Standard Buildings, 32, Dalhousie Square South, Calcutta, are hereby required to submit particulars of their claims, with supporting vouchers, to the undersigned on or before the 31st day of August 1931, after which date the Administrator will proceed to distribute the assets of the estate, having regard only to the claims of which notice shall then have been received. All persons indebted to the estate are requested to make payment of their respective debts without delay.

ORR, DIGNAM & Co.,
Solicitors to the Administrator abovenamed.

32, Dalhousie Square, South, Calcutta, 17th July 1931.

(1513—1—1545)

Currency Note.

A PORTION of the following Currency note of the Calcutta circle of issue is stated to have been destroyed and payment of its value has been claimed by the person whose name is shown against the number.

Any other person claiming a right to it is warned to communicate at once with the undersigned—

Regd. No.	Note No.	Value. Rs.	Name and address of the claimant.
WD 8 of 31-32.	S/36,914033	100	Suresh Chandra Dass, of Messrs. Dass & Co., Janiganj Bazar, Silchar P. O.

B. C. DUTT, Currency Officer.

Currency Office, Calcutta, the 10th July 1931.

Currency Notes.

PORTIONS of the following Currency Notes of the Calcutta Circle of issue are stated to have been destroyed and payment of their value has been claimed by the person whose name is shown against the numbers.

Any other person claiming a right to them is warned to communicate at once with the undersigned:—

Regd. No.	Note No.	Value. Rs.	Name and address of the claimant.
WD. 9 of 31-32.	S/29, 959428	100	Krishna Hari Barman,
	S/19, 598674	100	Gobnahati, Shitakuchi, post-office Cooch Behar.

B. C. DUTT, Currency Officer.

Currency Office, Calcutta, the 10th July 1931.

Lost.

THE Calcutta Municipal Debenture Nos. 1068, 1081, 1086 of the 4 per cent. loan of 1901-02 for Rs. 5,000, originally standing in the name of Prosad Das Boral & Bros., and last endorsed to Rai Bahadur Ram Taran Banerjee, the proprietor, by whom they were never endorsed to any other person, having been lost, notice is hereby given that payment of the above debenture and the interest thereupon have been stopped at the Public Debt Office, Imperial Bank of India, Calcutta, and that application is about to be made for the issue of duplicates in favour of the proprietor. The public are cautioned against purchasing or otherwise dealing with the abovementioned debentures.

Name of the advertiser—Ram Taran Banerjee.
Residence—16, Hazra Road, p. o. Kalighat, Calcutta.

(1442—3—1469)

Lost.

THE lower halves of the Government Promissory Notes Nos. 177497 and 148883 of the 3½ per cent. loans of 1854-55 and 1842-43 for Rs. 500 each, originally standing in the names of Amrita Chandra Ghose and the Bank of Bengal, respectively, and last endorsed to the Secretary, Gabha High School, the proprietor, by whom they were never endorsed to any other person, having been lost, notice is hereby given that payment of the above notes and the interest thereupon have been stopped at the Public Debt Office, Imperial Bank of India, Calcutta, and that application is about to be made for the issue of duplicates in favour of the proprietor. The public are cautioned against purchasing or otherwise dealing with the abovementioned securities.

Name of the Advertiser—Priyanath Ghose, Head Master and Assistant Secretary.
Residence—Gabha High School, Gabha, district Barisal.

(962—3—1541)

In the matter of the Indian Companies Act, 1913, and In the matter of the Prudential Bank (India), Limited (in liquidation).

NOTICE is hereby given that the creditors of the abovenamed Company which is being wound up voluntarily are required on or before the 14th August 1931 to send their names and addresses and particulars of their debts or claims to the undersigned, the liquidator of the said Company, or in default thereof such debts or claims will not be admitted.

N. C. SEN, Liquidator.

34, Musalmanpara Lane, Calcutta, the 17th July 1931.

(1533—1—1543)

In the matter of the Indian Companies Act, 1913, and In the matter of the Prudential Bank (India), Limited (in liquidation).

NOTICE is hereby given pursuant to section 209 of the Indian Companies Act, 1913, that a meeting of the creditors of the abovenamed Company will be held at 34, Musalmanpara Lane, Calcutta, on the 21st August 1931, at 5-30 p.m.

N. C. SEN, Liquidator.

Calcutta, the 17th July 1931. (1534—1—1544)

Imperial Library.

(Secretariat Buildings, 6, Esplanade East, Calcutta.)
Open on—

Weekdays and Saturdays from 10 A.M. to 7 P.M.
Sundays and Gazetted holidays from 2 P.M. to 5 P.M.

THE Imperial Library is also a Lending Library. It is free to all except children. There is no subscription to pay.

M. K. ASADULLAH, Librarian.

CINCHONA FACTORY PRODUCTS.

By order of the Government of Bengal Cinchona Factory Products as manufactured and packed at the Cinchona Factory, Mungpoo, Darjeeling district, will be sold and distributed by the **Superintendent, Presidency Jail,** *in original packages* as received from the Mungpoo Factory at the rates noted below **from the 1st May 1926** :—

Quinine Sulphate.

For 60 lbs. and upwards at a time .. Rs. 18 per lb.
For 6 lbs. and over but less than 60 lbs. at a time .. .. .. „ 19 „
For any quantity less than 6 lbs. .. „ 20 „

Quinine Hydrochloride.

For 60 lbs. and upwards at a time .. Rs. 23 per lb.
For 6 lbs. and over but less than 60 lbs. at a time .. .. .. „ 24 „
For any quantity less than 6 lbs. .. „ 25 „

Quinine Di-Hydrochlor.

For 60 lbs. and upwards at a time .. Rs. 25 per lb.
For 6 lbs. and over but less than 60 lbs. at a time .. .. .. „ 26 „
For any quantity less than 6 lbs. .. „ 27 „

Quinidine Sulphate.

For 60 lbs. and upwards at a time .. Rs. 20 per lb.
For 6 lbs. and over but less than 60 lbs. at a time .. .. .. „ 21 „
For any quantity less than 6 lbs. .. „ 22 „

Cinchonidine Sulphate.

For 60 lbs. and upwards at a time .. Rs. 25 per lb.
For 6 lbs. and over but less than 60 lbs. at a time .. . .. „ 26 „
For any quantity less than 6 lbs .. „ 27 „

Cinchonine Sulphate.

For 60 lbs. and upwards at a time .. Rs. 12 per lb.
For 6 lbs. and over but less than 60 lbs. at a time .. .. .. „ 13 „
For any quantity less than 6 lbs. .. „ 14 „

Cinchona Febrifuge (Powder).

For 6 lbs. and over at a time .. Rs. 9 per lb
For any quantity less than 6 lbs. .. „ 10 „

Cinchona Febrifuge (Tablets).

For 6 lbs. and over at a time .. Rs. 10 per lb.
For any quantity less than 6 lbs. .. „ 11 „

Quinoidine (Tablets).

For 6 lbs. and over at a time .. Rs. 5 per lb.
For any quantity less than 6 lbs. .. „ 6 „

Quinoidine (in Mass).

For 6 lbs. and over at a time .. Rs. 4 per lb.
For any quantity less than 6 lbs. .. „ 5 „

Cinchona Bark (in 50 pound original bags).

Per bag .. .. .. Rs 25.

Transit charges extra in every case.

Quinine Sulphate is for sale to Government Institutions and Missionaries only. It is not for sale to Private Firms or the General Public.

Cinchona Febrifuge in Powder and Tablet form (when in stock) is for sale to Government Institutions, Missionaries and the General Public.

Quinine Sulphate will be supplied to Hospitals and Dispensaries of this Presidency only at the wholesale rate of Rs. 18 per lb., irrespective of quantities. For all other purchasers the rates given above will apply.

Provinces other than Bengal, Bihar and Orissa and Assam will get their supplies of Sulph. Quinine from the Director, Botanical Survey of India, Sibpur, Howrah.

Local sale at the jail gate from 2 to 4 p.m.

The system of payment is by—*Cash in advance*—by "*Treasury Chalans*," which should accompany the order or indent.

In cases where this is not possible, payment should be made by "*Remittance Transfer Receipts*" or crossed "*Cheques*."

Indents unaccompanied by cash in advance will be sent Value Payable Post. Credit sale is not allowed except under special circumstances.

In the case of *Government officers* payment will be recovered by *Book Transfer*, i.e., *Countersigned Invoices* in the event of *Cash* not accompanying the indent by "*Treasury Chalans*," *Remittance Transfer Receipts* or *Cheque*.

2. Price and postage must accompany the price of the drug (when the drug is required by post).

3. The name of the Railway and Steamer Station or Post Office must be written distinctly when the parcels are required by Rail, Steamer or Post. *Railway parcels are sent by passenger train only.*

4. A scale of postage is given below :—

For ¼ lb. 4 annas, ½ lb. 5 annas, 1 lb. 8 annas, 1½ lbs. 11 annas, 2 lbs. 14 annas, 2½ lbs. Re. 1-1, 3 lbs. Re. 1-1, 3½ lbs. Re. 1-4, 4 lbs. Re. 1-7, 5 lbs. Re. 1-13, 5½ lbs. Re. 1-13, 6 lbs. Rs. 2

Two different drugs are not packed in the same parcel and postage must be paid separately for each kind.

N.B.—Postage stamps are not accepted as revenue.

Government reserve the right to alter the price without notice.

GOVERNMENT PUBLICATIONS FOR SALE.

At the Bengal Secretariat Book Depôt, Writers' Buildings, Calcutta, and by the following Agents :—

Agents in India.

Messrs. S. K. Lahiri & Co., Printers and Book-sellers, College Street, Calcutta.

Messrs. Thacker, Spink & Co., Calcutta.

Customers in the United Kingdom and the Continent of Europe may obtain the publications either direct from the High Commissioner's Office or through any bookseller.

NOTICE.—Books required for private use can be purchased. Applications should be accompanied by remittance in each case.

All remittances on account of subscriptions to or prices of Gazettes, Indian Law Reports or other Government publications available for sale at the Bengal Secretariat Book Depôt, or for cost of advertisements published in the Gazette, should be made payable to the "Treasurer, Bengal Secretariat, Calcutta." Advices of such remittances, if separately sent, should be addressed to the "Accountant, Bengal Secretariat." All advertisements intended for publication in the *Calcutta Gazette* should be sent direct to the Superintendent, Government Printing, Bengal, Alipore, 24-Parganas.

Books required for the Public Service should be obtained through the Heads of Departments.

NEW PUBLICATIONS ISSUED DURING THE CURRENT QUARTER.

Acts, Bills and Legislative Council Proceedings.

Bengal Act VII of 1930 (Bengal Rural Primary Education Act) in Bengali, Re. 1-13 (1a.).

Bengal Act VI of 1919 (Bengal Food Adulteration Act) as modified up to 1st July, 1931. As. 3 (1a.).

Miscellaneous Publications.

Administration. Report of the—of Bengal, 1929-30 Rs. 4-12 (7a.).

History. Of the Birbhum Zilla School, 1931. Rs. 10 (1a.).

Of the Hooghly College, 1931. As. 12 (1a).

Of the Hooghly Collegiate School, 1931 As 9 (1a.).

Of the Bankura Zilla School, 1931. Re. 1 (1a).

List. Of High Schools and Colleges in Bengal corrected up to 31st December 1930 As 13 (1½a).

Of members of the Bengal Legislative Council, etc., 9th list, dated the 6th July 1931. As. 5 (1a.).

Survey. Annual Report on the—and Settlement Operations in Bengal, 1929-30. Rs. 9-12 (6a.).

PUBLICATIONS ISSUED BETWEEN 1st JANUARY AND 30th JUNE 1931.

Acts, Bills and Legislative Council Proceedings.

Proceedings of the Bengal Legislative Council.

For the meetings held on the 9th to 13th, 16th to 18th February 1931. Vol. XXXVI, No. 1. Rs. 3-5 (8a.).

For the meetings held on the 23rd February and 2nd and 3rd March 1931. Vol. XXXVI, No. 2. Re. 1-4 (3a.).

For the meetings held on the 16th to 21st, 23rd to 28th and 30th March 1931. Vol. XXXVI, No. 3. Rs. 4-2 (12a.).

Bengal Act I of 1931 (Bengal Embankment Amendment Act) A.1 (6p.).

Bengal Act II of 1931 (Bengal Municipal Amendment Act). A.1 (6p.).

Bengal Act II of 1882 (Bengal Embankment Act), as modified up to 15th June 1930. Re. 1-2 (2a.).

Bengal Criminal Law Amendment Act, 1925, as modified up to 1st December 1930. As. 3 (1a.).

Bengal Act VII of 1930 (Bengal Rural Primary Education Act). As. 2 (1½a.).

Miscellaneous Publications.

Accounts. Question Papers of the Divisional—Examination, 1931. A.1 (1a.).

Agriculture. Annual Report of the Department of—, Bengal, 1929-30. Rs. 4-5 (4a.).

Budget. Civil—Estimate for the year 1931-32. Rs. 2 (9a.).

Public Works Department—Estimate of Provincial Civil Works in Bengal Presidency, 1931-32. Rs. 2 (3a.).

Public Works Department—Estimate of 60—Civil Works not charged to Revenue in Bengal Presidency, 1931-32. As. 8 (1a.).

Census. Report on the Cattle—of the Bengal Presidency, 1930. Rs. 3-10 (3a.).

Chronological Tables for 1931. As. 2 (1a.).

Cinchona. Sixty-eighth Annual Report of the Government—Plantations and Factory in Bengal, 1929-30. As. 9 (1a.).

Clerkship. Question Papers for—Examination for 1930. As. 8 (1a.).

Dispensaries. Triennial Report on the working of the Hospitals and—under the Government of Bengal, 1926 to 1928. Rs. 2-8 (5a.).

Education. Bengal—Code, 1931. Rs. 4-6 (11a.).

Excise. Report on the Administration of—Department in Bengal, 1929-30. Rs. 6-12 (5a.).

Health. Bengal Public—Report for 1929. Re. 1 (6a.).

Hints. Safety First—, 1931. A. 1 (1a.).

Industries. Annual Administration Report of the Department of—, Bengal, 1929-30. Re. 1-13 (3a.).

Instruction. Report on Public—in Bengal, 1929-30. Rs. 1-8 (3a.).

Irrigation Department. Classified List and Distribution Return of Establishment of the—corrected up to 1st January 1931. Rs. 3-4 (2a.).

Justice. Report on the Administration of Criminal—in the Presidency of Bengal, 1929. Re. 1-1 (2a.).

Report on the Administration of Civil—in the Presidency of Bengal, 1929. As. 12 (2a.).

Report on the Administration of Criminal—in the Province of Assam, 1929. Rs. 2 (1½a.).

Report on the Administration of Civil—in the Province of Assam, 1929. Rs. 2-4 (1a.).

Kanungos. Half-yearly Gradation List of Settlement—corrected up to November 1930. Rs. 2 (1½a.).

Land Revenue. Report on the—Administration of the Bengal Presidency, 1929-30. Rs. 5-2 (6a.).

List. Of Members of the Bengal Legislative Council, etc. 8th List, dated 21st January 1931. As. 5 (1a.).

Bengal Quarterly Civil—, corrected up to 1st January 1931. Rs. 3-8 (11a.).

Mill workers. Report on an Enquiry into the standard of living of Jute—in Bengal by Dr. A. C. Roy Chaudhury. Published 1930. Rs. 2 (2a.).

Mines. Guzrati Translation of the Bye-laws for Coal—in pamphlet form. As. 6 (1a.).

Rules framed by the Government of Bengal under section 30 of the Indian—Act, 1923 (IV of 1923), applicable to Coal—and—other than Coal—in pamphlet form, corrected up to 31st March 1931. As. 3 (1a.).

Motor Traffic. Report of the Committee appointed into matters connected with—on the Darjeeling Hill Cart Road, 1930. As. 7 (1a.).

Public Instruction. Supplement to the Report on—in Bengal, 1928-29. As. 12 (3a.).

Schedule of rates of the Eastern Circle, corrected up to 1st April 1930. Rs. 7-9 (5a.).

Statistics. Agricultural—of Bengal, 1929-30. Re. 1-2 (2a.).

Trade Unions. Report on the working of the Indian—Act (XIV of 1926), in Bengal for the year ending 31st March 1930. Re. 1-8 (1a.).

Veterinary. Annual Reports of the Civil—Department and Bengal—College, Calcutta, 1929-30. Re. 1-4 (2a.).

[30-7-1931]

Registered No. C207 *No. 31 of 1931*

The Calcutta Gazette

THURSDAY, JULY 30, 1931.

CONTENTS:

	PAGE.		PAGE.
Statement under the Cotton Ginning and Pressing Factories Act, 1925 ..	991	Weather and Crop Report for the week ending 22nd July 1931	995—998
Vital Statistics for the towns of Bengal for the week ending 18th July 1931 ..	992	Prices-current (wholesale) of certain articles in the Calcutta Mart and (retail) of common rice and salt in the districts of Bengal for the first-half of July 1931 ..	999—1002
Statements of weekly gauge readings of certain rivers in Bengal	993—994	Statement showing the daily gauge-readings of certain rivers for the week ending 16th July 1931	1003—1009

Supplement.

Official Papers.

FORM C—BENGAL.

STATEMENT OF COTTON PRESSED IN THE BENGAL PRESIDENCY FOR THE WEEK ENDING 17th JULY 1931.

[Section 5 (2) of the Cotton Ginning and Pressing Factories Act, 1925.]

Name of Division or block.	Number of bales pressed.				District included in the block.
	During the week.	During the corresponding week, last year.	Since 1st September 1930 (the date prescribed by the Local Government as the commencement of the season).	During the corresponding period, last year.	
The Bengal Presidency	1,159 or 1,150 bales of 400 lbs. each.	562	31,970	30,934	All districts in the Presidency.

J. B. McBRIDE,
Chief Inspector of Factories, Bengal (offg.).

Vital statistics of towns with a population of 50,000 and over of the Bengal Presidency for the week ending Saturday, the 18th July 1931.

District.	No.	Towns.	Population under registration according to Census of 1921.			Births registered.		Deaths registered.																							
			Male.	Female	Total	Number registered (excluding still-births).	Still-births registered.	Cholera.	Small-pox.	Plague.	Malaria	Enteric fever.	Measles	Relapsing fever.	Kala-azar.	Other fevers	Dysentery.	Diarrhœa.	Influenza.	Pneumonia.	Phthisis.	Other respiratory diseases.	Injuries including suicide.	Deaths from child-birth.	Other causes.	Total of all causes.			Total of corresponding week of the previous year.		
																									Male.	Female	Total.	Male.	Female.	Total.
Calcutta ..	1	Calcutta ..	724,248	353,016	1,077,264	462	37	28	3	..	10	12	1	..	7	29	26	9	16	32	47	71	13	..	228	299	233	532	318	235	553
Burdwan ..	2	Asansol Mining Settlement.	176,814	152,539	329,353	161	..	4	..	..	1	..	..	..	..	36	2	..	..	7	1	5	3	..	49	58	50	108	57	59	116
Howrah ..	3	Howrah ..	128,472	66,829	196,301	69	9	7	1	..	1	5	..	..	..	3	9	11	..	14	6	17	2	..	35	59	52	111	45	52	97
Dacca ..	4	Dacca ..	67,333	52,117	119,450	58	2	..	..	..	..	1	..	..	3	4	9	..	..	11	3	5	3	..	8	26	21	47	29	25	54
24-Parganas	5	Bhatpara ..	45,723	19,886	66,609	33	..	3	..	..	..	..	..	..	1	8	1	..	..	2	..	2	..	..	3	17	3	20	12	9	21
	6	Titagarh ..	36,533	15,918	52,451	9	2	..	..	.	..	..	..	..	..	16	..	1	..	..	..	..	..	1	..	7	11	18	10	6	16

R. B. KHAMBATA, M.R.C.S. (ENG.), L.R.C.P. (LOND.), D.P.H. (CAMB.), *Director of Public Health, Bengal (offg.).*

CALCUTTA, *the 24th July 1931.*

Statement showing the gauge readings at Dacca Waterworks on the river Buriganga for the week ending 18th July 1931.

Date.	At highest water.		At lowest water.		Commencement of—		Remarks.	
	Time.	Reading.	Time.	Reading.	Ebb tide.	Flow tide.	At 7 a.m.	At 5 p.m.
1931.								
12th July ..	Tide is not perceptible.						15·4	15·45
13th „ ..							15·5	15·55
14th „ ..							15·65	15·7
15th „ ..							15·8	15·9
16th „ ..							16·1	16 2
17th „ ..							16·3	16·4
18th „ ..							16·5	16·6

B. M. on settling tank 39·49 O. M. S. L. Zero is at O. M. S. L.

Notable high and low water-levels of previous years.

		Taken at high tide.				Taken at low tide.
27th August	1906 ..	70·5		23rd February	1907 ..	51·06
5th September	1909 ..	66·86		13th „	1908 ..	51·06
10th August	1910 ..	69·86		12th March	1912 ..	51·06
1st „	1911 ..	68·46		6th „	1914 ..	50·60
13th „	1912 ..	67·16		22nd February	1915 ..	50·30
31st „	1915 ..	69·7		15th „	1916 ..	50·60
8th „	1916 ..	68·1		3rd March	1917 ..	51·0
12th „	1917 ..	67·1		21st February	1918 ..	51·40
13th „	1918 ..	69·12		26th „	1919 ..	50·4
2nd „	1919 ..	66·8		18th „	1920 ..	50·9
8th September	1920 ..	66·9		19th „	1921 ..	50·9
28th July	1921 ..	68·4		8th March	1922 ..	51·05
10th August	1922 ..	68·00		14th „	1923 ..	50·8
31st July	1923 ..	66·15		16th February	1924 ..	50·50
29th August	1924 ..	68·82		5th March	1925 ..	50·9
8th September	1925 ..	68·52		9th February	1926 ..	2·2
15th August	1926 ..	19·6		27th „	1927 ..	2·10
17th September	1927 ..	18·70		16th „	1928 ..	2·2
22nd August	1928 ..	20·0		21st „	1929 ..	2·0
13th July	1929 ..	17·8		24th „	1930 ..	2·3
12th September	1930 ..	18·65				

N. B.—Zero of the gauge at Dacca Waterworks prior to 11 a.m. on the 8th January 1926= —48·51 with reference to P. W. D. datum.

Zero of the gauge at Dacca Waterworks since 11 a.m. on the 8th January 1926=0·00 with reference to P. W. D. datum.

[ILLEGIBLE], for *Executive Engineer,*
Khulna Division.

KHULNA, *the 25th July 1931.*

Statement of weekly gauge readings on the river Ganges at Rampur Boalia for the week ending the 18th July 1931.

Date.	Hour.	Height of surface above zero of gauge.	Height of surface above P. W. D. datum.	Height of surface above P. W. D. datum on the same date of last year.	Remarks.
1931.					
12th July ..	7 a.m.	....	46·25	46·15	Value of zero = 0·00 P. W. D.
13th „ ..	7 „	....	46·75	46·60	
14th „ ..	7 „	....	47·30	47·45	Zero of gauge referred to B. M. on Rajshahi College step ; value 64·73.
15th „ ..	7 „	....	47·75	48·40	
16th „ ..	7 „	....	48·10	49·30	
17th „ ..	7 „	....	48·30	50·05	
18th „ ..	7 „	....	48·40	51·20	

Highest recorded level on 26-8-1879=64·24.

Lowest recorded level on 25-4-1884=32·62.

S. M. HOSSAIN, for *Subdivisional Officer*,
Irrigation Department, Rajshahi.

RAMPUR BOALIA, *the 18th July 1931.*

DISTRICT REPORTS ON WEATHER AND CROPS.

For the week ending on the 22nd July 1931.

Summary.—During the week the rainfall was generally moderate to heavy in East and North Bengal while elsewhere the fall was light. Transplantation of winter paddy seedlings is progressing under favourable conditions. State and prospects of standing crops are reported to be fair. Harvesting of autumn paddy and jute continues in East and North Bengal districts Distress continues in parts of Nadia, Murshidabad, Dinajpur, Rangpur, Bogra and Pabna, the number of persons attending the test relief works in the different centres of these districts being 232, 2,912, 588, 47, 155 and 3,433 respectively. The number of persons gratuitously relieved at Rangpur and Bogra was 14 and 5 respectively. The average price of common rice for the Province has fallen by about 1·34 per cent. as compared with that of the previous week.

Serial No.	District and subdivision.	Rainfall.	Price of common rice, in seers, per rupee.		Character of the weather, condition of crops, etc.
			This week.	Previous week.	
1	2	3	4	5	6
		Inches.			
1	24-Parganas ..	1·88	9 11/16	9	Weather seasonable. Fodder and water are sufficient. Condition and prospects of jute are satisfactory except in Barrackpore where some damage was caused by insufficient rain. Height of jute plants is seven feet in Barrackpore, ten feet in Baraset, six feet in Basirhat and five feet in Diamond Harbour subdivisions. Steeping water is ample except in Diamond Harbour. Harvesting of jute has not yet commenced.
	Diamond Harbour.	5·43	10½	10½	
	Barrackpore ..	1·77	8½	8½	
	Baraset ..	1·20	9	9	
	Basirhat ..	4·49	9	9	
2	Nadia ..	6·06	9½	9½	Weather seasonable. Prospects of standing crops are good. Distribution of an agricultural loans is nearing completion. 232 persons attended test works during the week ending on the 18th July. Condition of jute plants is healthy and growth is satisfactory. No damage. Steeping water is sufficient. Height of plants is 2½ to 4 cubits. Height of river is as in last year. Rainfall normal. Harvesting of jute has not yet commenced.
	Kushtia ..	4·95	10	10	
	Meherpur ..	2·19	8 13/16	8 13/16	
	Chuadanga ..	3·22	10	10	
	Ranaghat ..	3·52	10	10	
3	Murshidabad ..	2·88	11	11	Weather seasonable. Prospects of crops are favourable. Fodder and water are sufficient. 2,912 persons attended test works on the 18th July in Jellingi thana. Condition of jute is not very healthy. No damage. Steeping water is sufficient. Height of jute plant is 3 to 6 feet. Height of rivers is the same as last year. Rainfall moderate. Harvesting of jute has not yet commenced.
	Lalbagh ..	1·32	10½	10	
	Jangipur ..	1·34	10½	11	
	Kandi ..	1·69	12	12	
4	Jessore ..	3·15	9⅔	9	Weather seasonable. Prospects of standing crops are good. Jute plants are healthy and growth is satisfactory. No damage. Steeping water is not sufficient. Height of jute plants is a little above five feet. Height of riverss is the same as last year. Rainfall is normal. Harvesting of jute has not yet commenced. Fodder and water are sufficient.
	Jhenidah ..	3·05	10	9	
	Magura ..	3·55	9	9	
	Narail ..	4·00	9½	9½	
	Bongaon ..	4·62	9½	9½	
5	Khulna ..	7·12	10½	10½	Weather seasonable ; its effects on crops are fair. Fodder and water are sufficient. Export and import of rice continue slowly. Cattle-disease is reported from Kaliganj thana. Growth of jute is good. No damage. Steeping water is sufficient. Height of jute plants is 4½ feet. Rainfall is normal. Harvesting has not commenced.
	Satkhira ..	3·60	9⅔	(*n*)	
	Bagerhat ..	5·26	8½	8½	

(*n*) Not reported.

Serial No.	District and subdivision.	Rainfall.	Price of common rice, in seers, per rupee.		Character of the weather, condition of crops, etc.
			This week.	Previous week.	
1	2	3	4	5	6
		Inches.			
6	Burdwan ..	(*n*)	(*n*)	12	Report not received.
	Asansol ..	(*n*)	(*n*)	9	
	Katwa ..	(*n*)	(*n*)	12	
	Kalna ..	(*n*)	(*n*)	11	
7	Birbhum ..	3·00	13	13	Weather hot and cloudy. Cattle-disease is reported from Bolpur thana. Fodder and water are sufficient.
	Rampurhat ..	1·91	12	12½	
8	Bankura ..	1·41	10¾	10½	Weather hot and cloudy. Prospects of standing crops are fair. Fodder and water are sufficient.
	Vishnupur ..	5·26	11¾	11¼	
9	Midnapore ..	2·67	13 7/16	13⅜	Weather cloudy. Fodder and water are sufficient. Cattle-disease is reported from Kharagpur. Jute is not grown commercially. Height of jute plants is over two cubits.
	Contai ..	1·31	12	12	
	Tamluk ..	2·82	10	10	
	Ghatal ..	2·99	12¼	12¼	
	Jhargram ..	3·80	11¾	11¾	
10	Hooghly ..	4·75	10	10	Weather seasonable. Transplantation of *aman* paddy continues. Fodder is sufficient. Growth of jute is satisfactory. Height of jute plants is 3 to 5 feet. No damage. Harvesting has not commenced. Steeping water is ample. Height of river is almost as last year. Rainfall moderate.
	Serampore ..	1·93	10	10	
	Arambagh ..	(*n*)	(*n*)	12½	
11	Howrah ..	1·91	8	8	Weather cloudy; its effects on agricultural operations and to standing crops are favourable. No large import or export. Fodder and water are sufficient. Jute plant is healthy. No damage. Steeping water is ample. Height of jute plants is 2 to 4 feet. Height of river is lower.
	Uluberia ..	2·88	10¼	9¾	
12	Rajshahi (Rampur-Boalia).	(*n*)	11½	10½	Growth of jute is satisfactory. No damage. Height of jute plants is 4½ feet. Height of rivers is the same as last year. Rainfall is moderate.
	Naogaon ..	(*n*)	(*n*)	(*n*)	Harvesting of jute has not yet commenced.
	Nator ..	4·88	9¾	9⅜	Fodder and water are sufficient.
13	Dinajpur ..	1·08	10½	10½	Weather seasonable and cloudy; its effects on agricultural operations are favourable. Prospects of standing crops are fair. Fodder and water are sufficient. More rain is needed for transplantation of *aman* crops. Cattle-disease is reported from Nawabganj thana. Condition of jute plants is not so healthy. Growth is fair. No damage. Steeping water is sufficient. Height of plants is 3 to 3½ cubits. River level is lower. Rainfall is insufficient. Harvesting has not yet commenced. Test relief work has commenced in Nawabganj police-station from the 19th instant. Number of persons attending the test relief works amounts to 588 from the 19th to 22nd instant.
	Thakurgaon ..	2·38	11	11	
	Balurghat ..	6·95	13	12	
14	Jalpaiguri ..	0·24	7	7	Weather hot; its effects are favourable for jute and *bhadoi* paddy. Condition of jute is not satisfactory. Steeping water is ample. Height of jute plants is 7 feet at Sadar and 5½ feet at Alipur Duars. Rainfall is excessive. Harvesting has not commenced owing to continual rainfall. Transplantation of *haimanti* paddy has commenced. Fodder and water are sufficient.
	Alipur ..	6·98	7	7	
15	Darjeeling ..	12·10	7	7	Potatoes and maize are being harvested. Fodder and water are sufficient. Cattle-disease exists at places. Transplantation of marwa and paddy is going on. Condition of jute is fair. No damage. Steeping water is ample. Height of jute plants is about 7 feet. River is full. Rainfall is excessive. Harvesting of jute has not begun.
	Kurseong ..	11·58	7	7	
	Siliguri ..	6·79	8½	9	
	Kalimpong ..	6·42	7	7	

(*n*) Not reported.

Serial No.	District and subdivision.	Rainfall.	Price of common rice, in seers, per rupee.		Character of the weather, condition of crops, etc.
			This week.	Previous week.	
1	2	3	4	5	6
		Inches.			
16	Rangpur ..	7·17	9½	9	Jute plants are fairly healthy. Harvesting of jute is going on. Steeping water is ample. Height of jute plants is 4 to 5 feet. River level is almost the same as last year. Rainfall is excessive. Prospects of standing crops are fair. Fodder and water are sufficient. 47 persons attended the test relief works. Number of persons receiving gratuitous relief was 14.
	Nilphamari ..	2·20	11	11	
	Kurigram ..	5·62	11⅛	11⅛	
	Gaibandha ..	2·39	10	10	
17	Bogra ..	5·23	11¼	11¼	Distress continues in the western part of the district. Agricultural loan for Rs. 20,000 is urgently needed. Number of persons attending the test relief works amounts to 155. Number of persons gratuitously relieved is 5. Condition of jute plants is fair. No damage. Steeping water is ample. Height of jute plants is 6½ feet. Height of rivers is 6 inches higher. Rainfall short. Two annas and a half crop is harvested. Cattle disease is reported from Sariakandi thana.
18	Pabna ..	5·36	10	9⅛	Export and import are normal. Condition of cattle is well Fodder and water are sufficient. Growth of jute is fair. No damage. Steeping water is ample. Jute plant is five feet on an average. Rainfall is not excessive. River level is two feet lower than last year. Three annas crop is harvested. 3,433 persons attended the test relief works during the week ending with 18th July 1931. Total amount paid up to date Rs. 31,289-0-9 only.
	Sirajganj ..	5·36	11	11	
19	Malda ..	9·01	10¼	10¼	Weather seasonable. Prospects of standing crops are good. Fodder and water are sufficient. Condition of jute plant is healthy. No damage. Steeping water is ample. Height of jute plants is 4 feet. Height of river is same as last year. Rainfall is moderate. Harvesting has not commenced.
20	Cooch Behar ..	6·34	10	10	Weather cloudy and rainy. Cutting and steeping of jute are in progress. Growth is somewhat staunted. No damage. Steeping water is sufficient. Rainfall is excessive. About 1 anna crop is harvested. Fodder is sufficient. Cattle-disease is reported from Sitalkuchi police-station.
21	Dacca ..	5·26	9½	8½	Rainfall at North Sadar (Kapasia) 3·33. Weather seasonable. Growth of jute is almost satisfactory. No damage. Steeping water is sufficient. Height of jute is between 3 and 6½ feet. Height of river is the same as last year. Rainfall is normal. One anna crop is harvested. Condition of other standing crops is satisfactory. Harvesting of *aus* paddy and jute is going on. Fodder and water are sufficient.
	Manikganj ..	1·99	11	9½	
	Narayanganj	3·04	10	9	
	Munshiganj ..	5·83	10	10	
22	Mymensingh ..	5·06	9	9	Weather seasonable. Condition of jute is not satisfactory. No damage. Steeping water is ample. Height of jute plants is 3 to 6 cubits. River level is higher than last year by 18 inches. Rainfall is normal. About 4 annas crop is harvested. Prospects of standing crops are fair. Fodder and water are adequate.
	Jamalpur ..	3·73	10½	10½	
	Tangail ..	4·95	9	9	
	Netrakona ..	5·67	10	11	
	Kishorganj ..	2 91	10	10	

Serial No.	District and subdivision.	Rainfall.	Price of common rice, in seers, per rupee.		Character of the weather, condition of crops, etc.
			This week.	Previous week.	
1	2	3	4	5	6
		Inches.			
23	Faridpur ..	4·65	9½	9½	Weather seasonable and favourable. Prospects of standing crops are fair. No large import or export. Fodder and water are sufficient. Growth of jute is satisfactory except in Sadar subdivision. No damage. Steeping water is ample. Height of jute plants is 6 feet. River level is the same as last year. Rainfall is not excessive. One and a half anna crop is harvested in the lowland.
	Goalundo (Rajbari).	3·62	9	9	
	Madaripur ..	2·00	10	10	
	Gopalganj (*a*)	3·54	8½	8½	
24	Bakarganj (Barisal).	4·17	9½	9	Weather seasonable. Fodder and water are sufficient. Prospects of standing crops are good. Condition of jute is not satisfactory. No damage. Steeping water is ample. Height of plants is from 4 to 6 feet. River level is 1 foot below last year. Rainfall is excessive. Harvesting of jute has commenced.
	Pirojpur ..	7·59	10	9	
	Patuakhali ..	7·72	10	10	
	Dakshin Shabazpur (Bhola).	7·20	9½	9½	
25	Chittagong ..	11·64	10 11*	10 11*	Prospects of standing *aus* crops fair. Fodder and water are sufficient. *Panga* salt sells at 16 seers per rupee at Sadar and at 13 seers per rupee at Cox's Bazar.
	Cox's Bazar ..	(*n*)	10	9	
26	Tippera (Comilla).	5·57	10	10	Growth of jute is satisfactory. Height of jute plants is 3 to 4 cubits. Two-annas crop is harvested. Some damage in Sadar.
	Brahmanbaria	3·75	10	10	
	Chandpur ..	4·28	9½	9½	
27	Noakhali ..	4·37	9	10	Condition of jute is fair. No damage. Harvesting has commenced.
	Feni ..	7·11	9	9	
28	Chittagong Hill Tracts.	4·03	13	13	Weather seasonable.
29	Tripura State ..	4·01	10	9½	Weather seasonable. Fodder and water are sufficient. Cleansed cotton sells at Rs. 6 to Rs. 13 per maund and jute at Rs. 2 to Rs. 5 per maund.

* Burma rice. (*n*) Not reported.

(*a*) The rainfall at Haridaspur, which is very near to Gopalganj, is not shown here.

DACCA, *the 25th July 1931.*

J. C. ROY, for *Director of Agriculture, Bengal.*

Wholesale prices-current of certain articles in the Calcutta mart of Bengal for the first half of July 1931.

Mart.	Wheat			Raw cotton.		
	Present return.	Next preceding return.	Corresponding return of last year.	Present return	Next preceding return.	Corresponding return of last year.
1	2	3	4	5	6	7
	Rs. A. P.	Rs A. P.	Rs A. P	Rs. A P	Rs A P	Rs. A. P.
Calcutta	2 13 0	2 14 0	4 8 0	18 0 0	19 0 0	18 0 0

Mart.	Coal.			Raw jute (weighted average).			*Gur* (sugarcane).		
	Present return.	Next preceding return.	Corresponding return of last year.	Present return	Next preceding return.	Corresponding return of last year.	Present return.	Next preceding return.	Corresponding return of last year.
	8	9	10	11	12	13	14	15	16
	Rs. A. P.	Rs. A. P.	Rs. A. P.	Rs. A. P.	Rs A. P	Rs. A. P.	R A. P.	Rs. A. P.	Rs. A. P.
Calcutta	0 6 6	0 6 6	0 6 6	4 11 0	4 13 0	6 8 0	6 4 0	6 8 0	8 8 0

J. C Roy, for *Director of Agriculture, Bengal.*

Dacca, *the 25th July 1931.*

Prices-current (retail) of common rice and salt in the districts of Bengal for the first half of July 1931.

Districts and Marts.	Quantity per rupee in seers of eighty tolas.								
	Common rice.						Salt.		
	Average.			Cheapest.					
	Present return.	Next preceding return.	Corresponding return of last year.	Present return.	Next preceding return.	Corresponding return of last year.	Present return.	Next preceding return.	Corresponding return of last year.
	S. Ch.	S. Ch.	S. Ch.	S. Ch.	S. Ch.	S. Ch.	S. Ch.	S. Ch.	S. Ch.
Dacca Division.									
Dacca—									
38 Sadar	8 8	8 8	6 0	9 8	9 8	7 8	14 0* 14 12	14 0* 14 12	11 4
39 Mirkadim ..	11 0	10 0	7 0	11 8	10 8	7 4	15 0	14 8	15 0
Mymensingh—									
40 Nasirabad ..	9 0	9 0	5 14	10 0	10 0	6 2	12 0*	12 0*	12 0*
41 Netrakona ..	11 0	8 0	6 12	13 0	9 0	7 4	13 0* 13 8	12 8* 14 8	10 0* 16 0
Faridpur—									
42 Sadar	9 8	8 8	6 0	10 8	9 0	6 8	10 0*	11 0*	11 0
43 Rajbari ..	9 0	9 0	6 0	10 8	10 8	7 0	12 0†	12 0†	12 0
Bakarganj—									
44 Barisal ..	9 0	9 7	6 0	10 0	10 8	6 8	16 0	16 0	14 0
45 Pirojpur ..	9 0	9 8	6 0	9 6	9 12	6 6	12 0†	11 0†	13 0
Chittagong Division.									
Tippera—									
46 Comilla ..	10 0	10 0	5 13	11 4	11 4	6 4	12 14	12 14	12 14
47 Chandpur ..	9 8	10 8	6 2	11 6	13 8	6 6	13 4	16 0	16 0
Noakhali—									
48 Kalitara Hat ..	9 0	9 0	5 4	10 0	10 0	5 8	13 0	13 0	13 0
49 Feni Hat ..	9 0	9 0	6 0	9 8	9 8	8 0	7 0* 13 0	7 0* 13 0	7 0* 13 0
Chittagong—									
50 Sadar	10 0	10 0	7 8	12 8	12 8	8 8	18 0	18 0	16 8
51 Cox's Bazar ..	10 0	10 0	5 0	11 0	11 0	(a)	15 0	15 0	13 0
52 Chittagong Hill Tracts —Rangamati ..	12 0	12 0	7 0	13 0	13 0	7 8	5 8* 12 0	5 8* 12 0	5 8* 12 0

(a) Not available. * Karkach.

N B.—The prices of Karkach and Liverpool salt tally with each other in marts marked †.

DACCA, *the 25th July 1931.* J. C. ROY, for *Director of Agriculture, Bengal.*

Statement showing the daily gauge readings of certain rivers at the stations named below for the 10th July 1931.

Name of river and place where readings are taken.	Hour.	Reading on gauge	Value of zero referred to P W.D datum.	Height above P. W. D. datum	Compared with previous day's height		Height above P. W. D. datum on same date in—	
					Rise.	Fall.	1930	1929.
Ganges .. Monghyr ..	6 a m. ..	109·00′	0·00′	109·00′	Steady.		108·10′	113·30′
Ganges .. Rajmahal ..	6 „ ..	69·60′	−0·12′	69·48′	0·40′	..	68·50′	75·00′
Ganges .. Goalundo ..	8-54 „ ..	24·10′	1·409′	25·509′	Steady.		22·109′	26·409
Bhagirathi .. Swarupganj ..	3 p m. ..	7 69′	0·00	7·69′	Steady		12 23	14·97′
Brahmaputra .. Dibrugarh ..	8 a.m. ..	36·80′	*301·50′	338·30′	0·40′	..	333·70′	336·76′
Brahmaputra .. Gauhati ..	....	22·90′	136·958′	159 858′	0·50′	..	155·758′	162·668′
Brahmaputra .. Serajganj ..	12-24 p.m. ..	38·50′	1·509′	40·009′	Steady.		38·209′	41·509′
Dhaleswari .. Sabhar ..	7 a.m ..	19·80′	0·00′	19·80	0·20′	..	19·10′	21·20′
Meghna .. Fenchuganj ..	7 a.m. ..	27·50′	1·509′	29·009′	..	0·10′	30·709′	.. ..
Meghna .. Bhairab Bazar ..	6-24 „ ..	18·46′	1·61′	20·07′	0·37′	..	21·15′	21·44′
Meghna .. Chandpur ..	1-9 p. m. ..	9 75′	1·61′	11·36′	..	0·08′	11·44′	12·78′
Lakhya .. Narayanganj ..	7-24 a.m. ..	21·42′	−5·59′	15·83′	0·09′	..	15·70′	17 41′
Madaripur Bil Route .. Takerhat ..	6-49 a.m. ..	10·00′	0 00′	10·00	0·10′	..	10·05′	11·60′
Damodar .. Edilpur ..	6 a.m. ..	4·08′	92·58′	96·66′	..	0·84′	109·25′	101·58′

* Zero of gauge has been altered from 5th June 1931.

Statement showing the daily gauge readings of certain rivers at the stations named below for the 11th July 1931.

Name of river and place where readings are taken.	Hour.	Reading on gauge.	Value of zero referred to P. W. D. datum.	Height above P. W. D. datum.	Compared with previous day's height.		Height above P. W. D. datum on same date in—	
					Rise.	Fall.	1930.	1929.
Ganges .. Monghyr	6 a.m.	109·40′	0·00′	109·40′	0·40′	..	108·50′	113·30′
Ganges .. Rajmahal	6 „	70·00′	—0·12′	69·88′	0·40′	..	69·10′	75·20′
Ganges .. Goalundo	8-54 „	24·30′	1·409′	25·709′	0·20′	..	22·209′	26·509′
Bhagirathi .. Swarupganj	5 p.m.	8·06′	0·00′	8·06′	0·37′	..	12·77′	15·67′
Brahmaputra .. Dibrugarh	8 a.m.	36·00′	*301·50′	337·50′	..	0·80′	334·40′	336·16′
Brahmaputra .. Gauhati	....	23·60′	136·958′	160·558′	..	..	155·958′	162·558′
Brahmaputra .. Serajganj	12-24 p.m.	38·90′	1·509′	40·409′	0·40′	..	38·009′	41·509′
Dhaleswari .. Sabhar	7 a.m.	20·00′	0·00′	20·00′	0·20′	..	18·90′	21·60′
Meghna .. Fenchuganj	7 a.m.	27·50′	1·509′	29·009′	Steady.		30·459′	..
Meghna .. Bhairab Bazar	6-24 „	18·42′	1·61′	20·03′	..	0·04′	21·15′	21·44′
Meghna .. Chandpur	1-59 p.m.	9·75′	1·61′	11·36′	Steady.		11·53′	13·36′
Lakhya .. Narayanganj	7 a.m.	21·62′	—5·59′	16·03′	0·20′	..	15·53′	..
Madaripur Bil Route .. Takerhat	8-24 „	10·25′	0·00′	10·25′	0·25′	..	10·05′	11·70′
Damodar .. Edilpur	6 „	5·17′	92·58′	97·75′	0·09′	..	102·66′	101·18′

* Zero of gauge has been altered from 5th June 1931.

Statement showing the daily gauge readings of certain rivers at the stations named below for the 12th July 1931.

Name of river and place where readings are taken.	Hour.	Reading on gauge.	Value of zero referred to P. W. D datum	Height above P. W. D datum.	Compared with previous day's height		Height above P. W. D datum on same date in—	
					Rise	Fall.	1930	1929.
Ganges .. Monghyr	6 a.m. ..	109·00′	0·00′	109·00′	..	0·40′	109·30′	113·90′
Ganges .. Rajmahal	6 „ ..	70·65′	—0·12′	70·53′	0·65′	..	69·40′	75·30′
Ganges .. Goalundo	8-54 „ ..	24·60′	1·409′	26·009′	0·30′	..	22·109′	26·509′
Bhagirathi .. Swarupganj	6 p.m. ..	9·9′	0·00′	9·09′	1·03′	..	12·78′	15·80′
Brahmaputra .. Dibrugarh	8 a m. ..	35·50′	*301·50′	337·00′	..	0·50′	333·80′	335·76′
Brahmaputra .. Gauhati	.... ..	24·20′	136·958′	161·158′	..	..	155·958′	162·458′
Brahmaputra .. Serajganj	12-24 p m. ..	39·20′	1·509′	40·709′	0·30′	..	37·509′	41·509′
Dhaleswari .. Sabhar	7 a m. ..	20·10′	0·00′	20·10′	0·10′	..	18·60′	21·80′
Meghna .. Fenchuganj	7 a.m. ..	27·60′	1·509′	29·109′	0·10′	..	30·209′	..
Meghna .. Bhairab Bazar	6-24 „ ..	18·58′	1·61′	19·69′	0·17′	..	21·07′	21·44′
Meghna .. Chandpur	2-49 p m ..	10·00′	1·61′	11·61′	0·25′	..	11·28′	13·36′
Lakhya .. Narayanganj	7 a m. ..	21·71′	—5·59′	16·12′	0·09′	..	15·45′	17·53′
Madaripur Bil Route .. Takerhat	.... ..	10·25′	0·00′	10·25′	Steady.		10·00′	11·80′
Damodar .. Edilpur	6 a.m. ..	5·42′	92·58′	98·00′	0·25′	..	101·33′	100·58′

*Zero of gauge has been altered from 5th June 1931.

Statement showing the daily gauge readings of certain rivers at the stations named below for the 13th July 1931.

Name of river and place where readings are taken.	Hour.	Reading on gauge.	Value of zero referred to P. W. D. datum.	Height above P.W.D. datum.	Compared with previous day's height.		Height above P. W. D. datum on same date in—	
					Rise.	Fall.	1930.	1929.
Ganges .. Monghyr	6 a.m. ..	110·40′	0·00′	110·40′	0·50′	..	110·90′	113·40′
Ganges .. Rajmahal	6 „ ..	71·45′	—0·12′	71·33′	0·80′	..	70·10′	75·55′
Ganges .. Goalundo	8-54 „ ..	24·80′	1·409′	26·209′	0·20′	..	22·109′	26·409′
Bhagirathi .. Swarupganj	6 p.m. ..	9 45′	0·00′	9·45′	0·36′	..	12·74′	15·94′
Brahmaputa .. Dibrugarh	8 a.m. ..	34·50′	*301·50′	336·00′	..	1·00′	333·30′	335·16′
Brahmaputa .. Gauhati	....	24·70′	136·958′	101·658′	0·50′	..	155·658′	162·158′
Brahmaputa .. Sirajganj	12-24 p.m. ..	39·30′	1·509′	40·809′	0·10′	..	37·509′	41·409′
Dhaleswari .. Sabhar	7 a.m. ..	20·30′	0·00′	20·30′	0·17′	..	18·30′	22·00′
Meghna .. Fenchuganj	7 a.m. ..	27·60′	1·509′	29·109′	Steady.		29·959′	..
Meghna .. Bhairab Bazar	6-24 „ ..	18·75′	1·61′	20·36′	0·17′	..	21·07′	21·36′
Meghna .. Chandpur	3-34 p.m. ..	10·17′	1·61′	11·78′	0·17′	..	11·03′	12·78
Lakhya .. Narayanganj	7 a.m. ..	21·96′	—5·59′	16·37′	0·25′	..	15·41′	17·45′
Madaripur Bil Route .. Takerhat	....	10·30′	0·00′	10·30′	0·05′	..	9·95′	12·00′
Damodar .. Edilpur	6 a.m. ..	5·17′	92·58′	97·75′	0·25′	..	101·41′	99·25′

* Zero of gauge has been altered from 5th June 1931.

Statement showing the daily gauge readings of certain rivers at the stations named below for the 14th July 1931.

Name of river and place where readings are taken.	Hour.	Reading on gauge.	Value of zero referred to P. W. D. datum.	Height above P. W. D. datum.	Compared with previous day's height.		Height above P. W. D. datum on same date in—	
					Rise.	Fall.	1930.	1929.
Ganges .. Monghyr	6 a.m.	110·70′	0·00′	110·70′	0·30′	..	112·80′	113·40′
Ganges .. Rajmahal	6 „	71·90′	—0·12′	71·78′	0·20′	..	71·40′	75·50′
Ganges .. Goalundo	8-54 „	25·00′	1·409′	26·409′	0·20′	..	22·309′	26·309′
Bhagirathi .. Swarupganj	6 p.m.	10·34′	0·00′	10·34′	0·89′	..	12·72′	15·89′
Brahmaputra .. Dibrugarh	8 a.m.	34·00′	*301·50′	335·50′	..	0·50′	332·90′	335·36′
Brahmaputra .. Gauhati	....	25·00′	136·958′	161·958′	0·30′	..	155·858′	161·458′
Brahmaputra .. Serajganj	12-24 p. m.	39·40′	1·509′	40·909′	0·30′	..	38·009′	41·309′
Dhaleswari .. Sabhar	7 a.m.	20·40′	0·00′	20·40′	0·10′	..	18·10′	22·00′
Meghna .. Fenchuganj	7 „	27·70′	1·509′	29·209′	0·10′	..	29·709′	..
Meghna .. Bhairab Bazar	6-24 „	18·83′	1·61′	20·44′	0·08′	..	21·07′	21·19′
Meghna .. Chandpur	4-24 p.m.	10·83′	1·61′	12·44′	0·42′	..	11·11′	12·61′
Lakhya .. Narayanganj	7 a.m.	22·17′	—5·59′	16·58′	0·21′	..	15·41′	17·24′
Madaripur Bil Route .. Takerhat	10-44 a.m.	10·45′	0·00′	10·45′	0·15′	..	9·95′	12·90′
Damodar .. Edilpur	6 a.m.	4 08′	92·58′	96·66	9·99′	..	100·00′	97·08′

*Zero of gauge has been altered from 5th June 1931.

Statement showing the daily gauge readings of certain rivers at the stations named below for the 15th July 1931.

Name of river and place where readings are taken.	Hour.	Reading on gauge.	Value of zero referred to P. W. D. datum.	Height above P. W. D. datum.	Compared with previous day's height.		Height above P. W. D. datum on same date in—	
					Rise.	Fall.	1930	1929.
Ganges .. Monghyr ..	6 a.m. ..	110·80′	0·00′	110·80′	0·10′	..	113·70′	113·70′
Ganges .. Rajmahal ..	6 „ ..	72·40′	−0·12′	72·28′	0·25′	..	73·00′	75·40′
Ganges .. Goalundo ..	8-54 „ ..	25·10′	1·409′	26·509′	0·10′	..	22·409′	26·209′
Bhagirathi .. Swarupganj ..	6 p.m. ..	11·52′	0·00′	11·52′	1·18′	..	13·24′	15·64′
Brahmaputra .. Dibrugarh ..	8 a.m. ..	33·70′	*301·50′	335·20′	..	0·25′	332·80′	334·86′
Brahmaputra .. Gauhati ..	....	25·40′	136·958′	162·358′	0·40′	..	155·958′	161·158′
Brahmaputra .. Serajganj ..	12-24 p.m. ..	39·40′	1·509′	40·909′	Steady		38·009′	41·209′
Dhaleswari .. Sabhar ..	7 a.m. ..	20·50′	0·00′	20·50′	0·10′	..	18·00′	21·90′
Meghna .. Fenchuganj ..	7 a.m. ..	27·75′	1·509′	29·259′	0·05′	..	29·509′	..
Meghna .. Bhairab Bazar ..	6-24 „ ..	18·87′	1·61′	20·48′	0·04′	..	20·90′	21·11′
Meghna .. Chandpur ..	5-9 p.m ..	11·17′	1·61′	12·78′	0·33′	..	11·19′	12·44
Lakhya .. Narayanganj ..	7 a.m. ..	22·33′	−5·59′	16·74	0·16′	..	15 33′	17·20′
Madaripur Bil Route .. Takerhat ..	11-45 a.m. ..	10·60′	0·00′	10·60′	0·15′	..	10·00′	11·90′
Damodar .. Edilpur ..	6 a.m. ..	4·08′	92·58′	96·66′	Steady		98·45′	97·58′

* Zero of gauge has been altered from 5th June 1931.

Statement showing the daily gauge readings of certain rivers at the stations named below for the 16th July 1931.

Name of river and place where readings are taken.	Hour.	Reading on gauge.	Value of zero referred to P. W. D. datum.	Height above P. W. D. datum.	Compared with previous day's height.		Height above P. W. D. datum on same date in—	
					Rise.	Fall.	1930.	1929.
Ganges .. Monghyr	6 a.m. ..	110·90′	0·00′	110·90′	0·10′	..	114·60′	113·40′
Ganges .. Rajmahal	6 „ ..	72·65′	—0·12′	72·53′	0·25′	..	73·70′	75·45′
Ganges .. Goalundo	8-54 „ ..	25·30′	1·409′	26·709′	0·20′	..	22·509′	26·109′
Bhagirathi .. Swarupganj	6 p.m. ..	11·97′	0·00′	11·97′	0·45′	..	13·18′	15·42′
Brahmaputra .. Dibrugarh	8 a.m. ..	33·30′	*301·50′	334·80′	..	0·40′	332·30′	334·76′
Brahmaputra .. Gauhati	....	25·40′	136·958′	162·358′	Steady.		154·658′	160·558′
Brahmaputra .. Serajganj	12-24 p.m.	39·50′	1·509′	41·009′	0·10′	..	37·809′	41·009′
Dhaleswari .. Sabhar	7 a.m. ..	20·70′	0·00′	20·70′	0·20′	..	18·00′	21·80′
Meghna .. Fenchuganj	7 a.m. ..	27·80′	1·509′	29·309′	0·05′	..	29·209′	..
Meghna .. Bhairab Bazar	6-24 „ ..	19·08′	1·61′	20·69′	0·21′	..	20·82′	21·03′
Meghna .. Chandpur	5-54 „ ..	11·33′	1·61′	12·94′	0·17′	..	11·28′	12·53′
Lakhya .. Narayanganj	7 a.m. ..	22·58′	—5·59′	16·99′	0·25′	..	15·24′	17·24′
Madaripur Bil Route .. Takerhat	4-24 p.m. ..	10·80′	0·00′	10·80′	0·20′	..	10·00′	11·90′
Damodar .. Edilpur	6 a.m.* ..	4·92′	92·58′	97·50′	0·84′	..	99·75′	97·00′

* Zero of gauge has been altered from 5th June 1931.

Printed at the Bengal Government Press, Alipore, and published by the Bengal Secretariat Book Depot, Writers' Buildings, in the City of Calcutta, on the 30th July 1931.

Registered No. C207

The Calcutta Gazette

Extraordinary

THURSDAY, JULY 30, 1931.

GOVERNMENT OF BENGAL.

Political Department.

Political.

NOTIFICATION.

No. 12176P.—30th July 1931.—In exercise of the power conferred by section 99A of the Code of Criminal Procedure, 1898 (Act V of 1898), the Governor in Council hereby declares to be forfeited to His Majesty, all copies, wherever found, of a leaflet in Bengali entitled "Shabash, Bimal, Shabash," commencing with the words "Nabin mantre" and ending with the words "Bande Mataram" on the ground that the said leaflet contains matter which brings or attempts to bring into hatred or contempt and excites or attempts to excite disaffection towards the Government established by law in British India, the publication of which is punishable under section 124A of the Indian Penal Code.

R. N. Reid,

Chief Secy. to the Govt. of Bengal (offg.).

Printed at the Bengal Government Press, Alipore, and published by the Bengal Secretariat Book Depot, Writers' Buildings, in the City of Calcutta, on the 30th July 1931.

Registered No. C207

No. 32 of 1931

BENGAL LIBRARY

The Calcutta Gazette

THURSDAY, AUGUST 6, 1931.

CONTENTS:

	PAGE.
PART I.—Orders and Notifications by the Governor of Bengal, the Government of Bengal, the High Court, Government Treasury, etc.	909—942
PART IA.—Orders and Notifications by the Government of India republished for general information	221—224
PART IB.—Educational Notices ..	823—838
PART II.—Advertisements	693—702
PART III.—Acts of the Bengal Legislative Council	*Nil*
PART IV.—Bills introduced in the Bengal Legislative Council, Reports of Select Committees presented or to be presented to that Council, and Bills published before introduction in that Council—	
The Garden Reach Municipality Bill, 1931, with Statement of Objects and Reasons	65—72
PART V.—Acts of the Indian Legislature assented to by the Governor General and Ordinances promulgated under section 72 of the Government of India Act ..	*Nil*
PART VI.—Bills introduced in the Council of State and Legislative Assembly, Reports of Select Committees presented to the Council and Assembly and Bills published under Rule 18 of the Indian Legislative Rules	*Nil*
SUPPLEMENT No. 32—	
Forecast of the Summer *Til* Crop of Bengal, 1931-32	1011—1013
Cotton Ginning and Pressing ..	1014
Statement of donations and endowments in the districts of the Burdwan Division, 1930-31	1014
Weekly Weather and Crop Report—Daily gauge-readings—Weekly gauge-readings—Weekly Vital Statistics ..	1015—1028
Resolution on the Report on the Police Administration in the Bengal Presidency for the year 1930	1029—1032

Part I

Orders and Notifications by the Governor of Bengal, the Government of Bengal, the High Court, Government Treasury, etc.

ORDERS BY THE GOVERNMENT OF BENGAL.

No. 6969A.

Appointments and Transfers.

GENERAL.

Bogra.—No. 6262A.—27th July 1931.—Mr. Satyendra Nath Ray (No. II), I.C.S., on leave, is appointed to act, until further orders, as Magistrate and Collector, Bogra.

24-Parganas.—No. 6848A.—30th July 1931.—Mr. A. L. Blank, I.C.S., Commissioner for Workmen's Compensation, Bengal, is appointed temporarily to act, in addition to his own duties, as District and Sessions Judge, 24-Parganas.

Dacca.—No. 6855A.—30th July 1931.—The services of Babu Prabodh Chandra Ray, officiating Additional District and Sessions Judge, Dacca, are placed temporarily at the disposal of the Government of Assam.

Presy. Divn.—No. 6874A.—30th July 1931.—Babu Ratan Lal Das Gupta, Sub-Deputy Collector, on leave, is posted to the Presidency Division.

Bogra-Chittagong Divn.—No. 6877A.—30th July 1931.—Babu Anadi Nath Sarkar, Sub-Deputy Collector, is posted to the Chittagong Division, on relinquishing charge of his appointment as Manager, Jaipur Government Estate, Bogra.

Hooghly-Jalpaiguri.—No. 6910A.—31st July 1931.—The orders of the 16th July 1931, transferring Babu Jiban Chandra Chatarji, Deputy Magistrate and Deputy Collector, Hooghly, to the headquarters station of the Jalpaiguri district, are cancelled.

Dinajpur-Jalpaiguri.—No. 6921A. — 1st August 1931.—Babu Jatindra Nath Mukharji, officiating Additional District and Sessions Judge, Dinajpur, is appointed temporarily to act, in addition to his own duties, as Additional Sessions Judge of Jalpaiguri.

He is authorised, under section 9 (*4*) of the Code of Criminal Procedure, to sit at Dinajpur or at Jalpaiguri for the disposal of cases arising in either of these districts.

POLICE.

Dacca-Mymensingh.—No. 6844A. — 29th July 1931.—Mr. Khondkar Fazle Sobhan, Assistant Superintendent of Police, on leave, is posted temporarily to the headquarters station of the Dacca district and is appointed to have charge of police work of the Dacca town.

2. This cancels the orders of the 2nd July 1931, posting Mr. Sobhan to Netrakona, Mymensingh.

ECCLESIASTICAL.

Calcutta.—No. 6851A.—30th July 1931.—The Reverend Canon O. W. Birch, a Chaplain of the Indian Ecclesiastical Establishment, on leave, is appointed to be Chaplain of St. Peter's Church, Fort William, Calcutta, with effect from the 20th July 1931.

Calcutta.—No. 6882A.—30th July 1931.—The Reverend I. J. Gush, Chaplain of St. Thomas' Church, Calcutta, acted in addition to his own duties, as Chaplain of St. Peter's Church, Fort William, Calcutta, from the 15th April 1931 to the 19th July 1931, inclusive.

The orders contained in notification No. 3585A., dated the 13th April 1931, are cancelled.

Confirmation.

GENERAL.

Mymensingh.—No. 6272A.—27th July 1931.—Mr. Suresh Chandra Ghatak, officiating Additional District Magistrate, Mymensingh, is confirmed in the grade of Magistrates and Collectors, with effect from the 28th June 1931.

Leave.

GENERAL.

Bogra.—No. 6206A.—25th July 1931.—Babu Suresh Chandra Guha Thakurta, Deputy Magistrate and Deputy Collector, Bogra, is allowed leave on average pay up to the 14th October 1931, under rule 81 (*b*) (*ii*) of the Fundamental Rules, with effect from the 3rd August 1931, or any subsequent date on which he may avail himself of it.

Pabna.—No. 6232A.—27th July 1931.—Maulvi Manzur Ahmad Chaudhuri, Deputy Magistrate and Deputy Collector, Sirajganj, Pabna, is allowed leave on average pay for fifteen days, under rule 81 (*b*) (*ii*) of the Fundamental Rules, in extension of the leave granted to him under the orders of the 16th July 1931.

Calcutta.—No. 6257A.—27th July 1931.—Babu Binod Bihari Sarkar, Deputy Magistrate and Deputy Collector, employed as Assistant Secretary to the Government of Bengal, in the Department of Education, is allowed leave on average pay for four months, under rule 81 (*b*) (*ii*) of the Fundamental Rules, with effect from the 8th August 1931, or any subsequent date on which he may be relieved.

Bogra.—No. 6259A.—27th July 1931.—Rai Anath Bandhu De Bahadur, Magistrate and Collector, Bogra, is allowed leave on average pay up to the 29th December 1931, under rule 81 (*b*) (*ii*) of the Fundamental Rules, with effect from the date on which he may be relieved.

Pabna.—No. 6269A.—27th July 1931.—Babu Kanai Lal Banarji, Deputy Magistrate and Deputy Collector, Sirajganj, Pabna, is allowed leave on average pay up to the 14th October 1931, under rule 81 (*b*) (*ii*) of the Fundamental Rules, with effect from the 1st August 1931, or any subsequent date on which he may be relieved.

Rajshahi.—No. 6836A.—29th July 1931.—Babu Jasoda Kinkar Ghosh, Sub-Deputy Collector, Rajshahi, was allowed leave on half average pay for four days, under rule 81 (*d*) of the Fundamental Rules, in extension of the leave granted to him under the orders of the 24th February 1931.

Bakarganj.—No. 6924A.—1st August 1931.—Khan Bahadur Abu Ahmad Abdul Basit, Deputy Magistrate and Deputy Collector, Bakarganj, is allowed leave on average pay, for four months, under rule 81 (*b*) (*ii*) of the Fundamental Rules, with effect from the 1st August 1931.

POLICE.

No. 6200A.—25th July 1931.—Mr. Khondkar Fazle Sobhan, Assistant Superintendent of Police, is allowed leave on average pay for eight days, under rule 81 (*b*) (*ii*) of the Fundamental Rules, in extension of the leave granted to him under the orders of the 2nd April 1931.

Calcutta.—No. 6917A.—1st August 1931.—Babu Saktipada Chakrabatti, an Assistant Commissioner of Police, Calcutta, is allowed leave on average pay for seventeen days, under rule 81 (*b*) (*ii*) of the Fundamental Rules, in extension of the leave granted to him under the orders of the 22nd July 1931.

Calcutta.—No. 6308A.—29th July 1931.—Mr. F. D. Bartley, Deputy Commissioner of Police, Calcutta, is allowed leave on average pay for seven days, under rule 81 (*b*) (*i*) of the Fundamental Rules, in extension of the leave granted to him under the orders of the 13th April 1931.

Mymensingh.—No. 6838A.—29th July 1931.—Mr. L. N. Bavin, Superintendent of Police, Mymensingh, is allowed leave for seven months, viz., leave on average pay for three months and sixteen days, under rule 81 (*b*) (*i*) of the Fundamental Rules, with effect from the 3rd September 1931, or any subsequent date on which he may be relieved, and leave on half average pay for the remaining period, under rule 81 (*d*) of those Rules.

No. 6886A.—31st July 1931.—Babu Nikhil Chandra Basu, Deputy Superintendent of Police, is allowed leave for six months in extension of the leave granted to him under the orders of the 4th May 1931, viz., leave on average pay for four months, under the proviso to rule 81 (*b*) (*i*) of the Fundamental Rules, and leave on half average pay for the remaining period, under rule 81 (*d*) of those Rules.

ECCLESIASTICAL.

Calcutta.—No. 6811A.—29th July 1931.—The orders contained in notification No. 5050-A., dated the 29th June 1931, granting an extension of leave for seven days to the Reverend Canon O. W. Birch, Chaplain of St. Stephen's Church, Kidderpore, Calcutta, are cancelled.

R. N. REID,
Chief Secy. to the Govt. of Bengal (offg.).

NOTIFICATION.

No. 6225A.—27th July 1931.—The officers, named below, are vested with the powers of a Deputy Collector—

Mr. Ramanlal Shankerlal Trivedi, I.C.S., Assistant Magistrate, Midnapore.

Mr. Rangachari Srinivasadesika Krishnaswamy, I.C.S., Assistant Magistrate, Hooghly.

Mr. H. E. Richardson, I.C.S., Assistant Magistrate, Rajshahi

Mr. P. N. McWilliam, I.C.S., Assistant Magistrate, Jalpaiguri.

Mr. Aziz Ahmed, I.C.S., Assistant Magistrate, Murshidabad.

Mr. Sushil Kumar Dey, I.C.S., Assistant Magistrate, Nadia.

Mr. Nirmalkanti Ray Chaudhury, I.C.S., Assistant Magistrate, Nadia.

R. N. REID,
Chief Secy. to the Govt. of Bengal (offg.).

POLITICAL DEPARTMENT.

Political.

NOTIFICATIONS.

No. 12430P.—25th July 1931.—In exercise of the powers conferred by section 7, sub-section (*6*) of the Cinematograph Act, II of 1918, the Governor in Council is pleased to direct that the film entitled "Captain of the Guard" produced by the Universal Pictures Corporation shall be deemed to be an uncertified film in the whole of the Bengal Presidency.

No. 12768P.—28th July 1931.—In exercise of the power conferred by section 99A of the Code of Criminal Procedure, 1898 (Act V of 1898), the Governor in Council hereby declares to be forfeited to His Majesty all copies, wherever found, of a pamphlet in Gurmukhi entitled "Sardar Bhagat Singh" containing poems, published by the Akali Book Depot at 72A, Ashutosh Mukharji Road, Calcutta, and printed at the "Kavi Press" at 11, Sankaripara Road, Calcutta, on the ground that the said pamphlet contains matter which brings or attempts to bring into hatred or contempt and excites or attempts to excite disaffection towards the Government established by law in British India, the publication of which is punishable under section 124A of the Indian Penal Code.

No. 12892P.—30th July 1931.—In exercise of the power conferred by section 99A of the Code of Criminal Procedure, 1898 (Act V of 1898), the Governor in Council hereby declares to be forfeited to His Majesty all copies, wherever found, of a pamphlet in Gurmukhi entitled "Shaid Hari Kishen," on the ground that the said pamphlet contains matter which brings or attempts to bring into hatred or contempt and excites or attempts to excite disaffection towards the Government established by law in British India, the publication of which is punishable under section 124A of the Indian Penal Code.

No. 13100P.—31st July 1931.—In exercise of the power conferred by section 99A of the Code of Criminal Procedure, 1898 (Act V of 1898), the Governor in Council hereby declares to be forfeited to His Majesty all copies, wherever found, of a chart in Bengali headed "Amar Desh" printed and published by Brojendra Chandra Bhadra of Deshbandhu Palli Sanskar Samity Service Printing Company, 20A, Gopi Bose Lane, Calcutta, on the ground that the said chart contains matter which brings or attempts to bring into hatred or contempt and excites or attempts to excite disaffection towards the Government established by law in British India, the publication of which is punishable under section 124A of the Indian Penal Code.

No. 13177P.—1st August 1931.—In exercise of the power conferred by section 99A of the Code of Criminal Procedure, 1898 (Act V of 1898), the Governor in Council hereby declares to be forfeited to His Majesty all copies, wherever found, of a leaflet in English printed in red entitled "Blood calls for blood," on the ground that the said leaflet contains matter which brings or attempts to bring into hatred or contempt and excites or attempts to excite disaffection towards the Government established by law in British India, the publication of which is punishable under section 124A of the Indian Penal Code.

R. N. REID,
Chief Secy. to the Govt. of Bengal (offg.).

POLICE DEPARTMENT.

NOTIFICATIONS.

Burdwan-Birbhum. — No. 3236Pl. — 31st July 1931.—Whereas the Governor in Council has reason to believe that the members of a gang of dacoits, burglars and thieves ordinarily residing in the jurisdiction of police-stations Jamuria and Ondal in the district of Burdwan and Khoirasol in the district of Birbhum commonly known as "Mobai Kazi's gang" are addicted to the systematic commission of non-bailable offences:

Now, therefore, the Governor in Council, in exercise of the power conferred by section 3 of the Criminal Tribes Act, 1924 (Act VI of 1924), hereby declares the said gang to be a criminal tribe for the purposes of that Act.

Burdwan-Birbhum. — No. 3237Pl. — 31st July 1931.—In exercise of the power conferred by section 10 of the Criminal Tribes Act, 1924 (Act VI of 1924), the Governor in Council hereby directs that every registered member of "Mobai Kazi's gang," which has been declared by notification No. 3236Pl., dated the 31st July 1931, to be a criminal tribe, shall, in the prescribed manner, report himself at fixed intervals and notify his place of residence, any change or intended change of residence, and any absence or intended absence from his residence.

R. N. REID,
Chief Secy. to the Govt. of Bengal (offg.).

JUDICIAL DEPARTMENT.

No. 6970A.

Powers.

No. 6217A.—27th July 1931.—The officers, named below, are vested with the powers of a Magistrate of the first class:—

Mr. R. A. Dutch, I.C.S., Assistant Magistrate, Mymensingh.

Mr. Rabindra Kumar Mitra, I.C.S., Assistant Magistrate, Mymensingh.

Mr. L. A. Chapman, I.C.S., Assistant Magistrate, Jalpaiguri.

Mr. Annada Sankar Ray, I.C.S., Assistant Magistrate, Bankura.

No. 6221A.—27th July 1931.—The officers, named below, are vested with the powers of a Magistrate of the second class—

Mr. Ramanlal Shankerlal Trivedi, I.C.S., Assistant Magistrate, Midnapore.

Mr. Rangachari Srinivasadesika Krishnaswamy, I.C.S., Assistant Magistrate, Hooghly.

Mr. H. E. Richardson, I.C.S., Assistant Magistrate, Rajshahi.

Mr. P. N. McWilliam, I.C.S., Assistant Magistrate, Jalpaiguri.

Mr. Aziz Ahmed, I.C.S., Assistant Magistrate, Murshidabad.

Mr. Sushil Kumar Dey, I.C.S., Assistant Magistrate, Nadia.

Mr. Nirmalkanti Ray Chaudhury, I.C.S., Assistant Magistrate, Nadia.

No. 6846A.—29th July 1931.—Babu Radha Raman Singh, Deputy Magistrate, on probation, Midnapore, is vested with the powers of a Magistrate of the second class.

No. 6913A.—1st August 1931.—Babu Asit Kumar Biswas, Sub-Deputy Magistrate, on probation, Midnapore, is vested with the powers of a Magistrate of the third class.

No. 6915A.—1st August 1931.—Maulvi Abu Ahmad Faizul Mohi, Sub-Deputy Magistrate, Bankura, is vested with the powers of a Magistrate of the second class.

R. N. REID,
Chief Secy. to the Govt. of Bengal (offg.).

Appointments and Transfers.

Bogra.—No. 5584J.—23rd July 1931.—In exercise of the powers conferred by sections 14 and 15 of the Code of Criminal Procedure, 1898 (Act V of 1898), the Governor in Council is pleased—

(*a*) to confer upon Babu Prafulla Chandra Tarafdar the powers of a Magistrate of the third class, in the district of Bogra, for a period of three years from the date of this notification, and

(*b*) to direct him to sit as a member of the Sherpur bench in the said district.

Chittagong.—No. 5599J.—24th July 1931. —Babu Jogesh Chandra Lodh, officiating munsif, was, on transfer from Satkania in the district of Chittagong, appointed to act as a munsif at Patiya in the same district from the 2nd April 1931.

Noakhali-Chittagong.—No. 5619J. — 25th July 1931.—Babu Nirmal Chandra Chatarji, who last acted as munsif of Hatiya, in the district of Noakhali, is appointed to act as a munsif in the district of Chittagong, to be ordinarily stationed at South Raojan, during the absence, on leave, of Babu Jogendra Nath Das Gupta, or until further orders.

Nadia.—No. 5621J.—25th July 1931.—Babu Sudhir Chandra Datta, additional munsif of Kushtia and Ranaghat, in the district of Nadia, now on deputation to Meherpur, is appointed to be an additional munsif at Ranaghat in the same district.

24-Parganas.—No. 5682J.—31st July 1931.—In exercise of the powers conferred by sections 14 and 15 of the Code of Criminal Procedure, 1898 (Act V of 1898), the Governor in Council is pleased—

(*a*) to confer upon Mr. Peter Keddie the powers of a Magistrate of the third class, in the district of the 24-Parganas, for a period of three years from the 21st August 1931, and

(*b*) to direct him to sit as a member of the Titagarh bench in the said district.

24-Parganas.—No. 5686J.—31st July 1931.—In exercise of the powers conferred by sections 14 and 15 and the proviso to section 357 of the Code of Criminal Procedure, 1898 (Act V of 1898), the Governor in Council is pleased—

(*a*) to confer upon Babu Panchu Gopal Chakrabatti the powers of a Magistrate of the second class, in the district of the 24-Parganas, for a period of three years from the 10th August 1931, in respect to such cases as may be made over to him within the limits of the Barrackpore subdivision of the said district,

(*b*) to direct that he shall, in addition to sitting singly, sit as a member of the Baranagar bench in the said district, and

(*c*) to direct him to take down evidence in the English language.

Midnapore-Mymensingh.—No. 5689J.—31st July 1931.—Babu Brajendra Lal Sarkar, who recently acted as a munsif of Midnapore (Sadar), is appointed to act, until further orders, as a munsif in the district of Mymensingh, to be ordinarily stationed at Kishoreganj, *vice* Babu Suresh Chandra Chakrabatti, deceased.

Leave.

No. 5634J.—27th July 1931.—Babu Tarak Nath Basu, Subordinate Judge and Assistant Sessions Judge, is allowed leave on average pay for three weeks, with effect from the 9th July 1931, under rules 81 (*b*) (*ii*) and 82 (*b*) of the Fundamental Rules.

Hooghly.—No. 5740J.—6th July 1931.—Babu Shailendra Nath Chatarji, munsif of Hooghly (Sadar), is allowed leave on average pay for sixteen days, under rule 81 (*b*) (*ii*) of the Fundamental Rules, with effect from the 19th June 1931.

Mymensingh.—No. 5741J.—6th July 1931.—Babu Suresh Chandra Sen, No. II, munsif of Mymensingh (Sadar), is allowed leave on average pay for the period from the 9th to the 22nd July 1931, under rule 81 (*b*) (*ii*) of the Fundamental Rules.

Mymensingh.—No. 5742J.—7th July 1931.—Babu Rajani Kanta Chaudhuri, munsif of Jamalpur, in the district of Mymensingh, is allowed leave on half average pay up to the 30th September 1931, under rule 81 (*d*) of the Fundamental Rules, in extension of the leave granted to him under the orders of the 22nd April 1931.

Noakhali.—No. 5743J.—7th July 1931.—Maulvi Faziruddin Ahmad, munsif of Sandwip, in the district of Noakhali, is allowed leave on average pay for the period from the 6th to the 25th June 1931, under rules 81 (*b*) (*ii*) and 82 (*b*) of the Fundamental Rules.

Midnapore.—No. 5744J.—8th July 1931.—Maulvi Abdur Rabban, munsif of Midnapore (Sadar), is allowed leave on average pay for the period from the 4th to the 22nd June 1931, under rules 81 (*b*) (*ii*) and 82 (*b*) of the Fundamental Rules.

Dinajpur.—No. 5745J.—10th July 1931.—Babu Brajendra Saran Sanyal, munsif of Balurghat, in the district of Dinajpur, is allowed leave on average pay for one month, under rules 81 (*b*) (*ii*) and 82 (*b*) of the Fundamental Rules, in extension of the leave granted to him under the orders of the 1st June 1931.

No. 5746J.—14th July 1931.—Babu Tribhubaneswar Ray, munsif, is allowed leave on half average pay up to the 10th October 1931, under rule 81 (*d*) of the Fundamental Rules, in extension of the leave granted to him under the orders of the 2nd April 1931. He is also permitted to affix the civil court vacation of 1931 to the leave, under rule 82 (*d*) of those rules.

Midnapore.—No. 5747J.—14th July 1931.—Babu Harendra Nath Banarji, munsif of Jhargram, in the district of Midnapore, is allowed leave on average pay for the period from the 20th July to the 22nd August 1931, under rules 81 (*b*) (*ii*) and 82 (*b*) of the Fundamental Rules.

Jessore.—No. 5748J.—17th July 1931.—Babu Ashutosh Ukil Banarji, munsif of Narail, in the district of Jessore, is allowed leave on average pay, on medical certificate, up to the 5th September 1931, under the proviso to rule 81 (*b*) (*ii*) of the Fundamental Rules, in extension of the leave granted to him under the orders of the 4th May 1931.

Tippera.—No. 5749J.—18th July 1931.—Babu Sharat Chandra Mukharji, late munsif of Comilla, in the district of Tippera, is allowed leave on half average pay up to the 8th August 1931, under rule 81 (*d*) of the Fundamental Rules, in extension of the leave granted to him under the orders of the 23rd April 1931.

No. 5750J.—20th July 1931.—Babu Birendra Chandra Sen Gupta, munsif, who lately acted as 2nd Additional Subordinate Judge, Sylhet and Cachar, is allowed leave on average pay, on medical certificate, for two months, under the proviso to rule 81 (*b*) (*ii*) of the Fundamental Rules, with effect from the 16th June 1931.

Resignation.

Bakarganj.—No. 5684J.—31st July 1931.—The Governor in Council is pleased to accept the resignation tendered by Babu Prabhat Chandra Datta of his office as an Honorary Magistrate at Jhalakati in the district of Bakarganj.

Powers.

Faridpur.—No. 5597J.—24th July 1931.—In exercise of the power conferred by section 14 of the Code of Criminal Procedure, 1898 (Act V of 1898), the Governor in Council is pleased to confer upon Babu Indu Bhusan Sarkar, an Honorary Magistrate of the Sadar bench, the powers of a Magistrate of the third class, in the district of Faridpur, for the period during which he has been directed to sit as a member of the said bench, in respect to such cases as may be made over to him, when sitting singly, within the limits of the Sadar subdivision of the said district.

Murshidabad.—No. 5667J.—29th July 1931.—Babu Sailendra Nath Mitra, munsif of Jangipur, in the district of Murshidabad, is vested with powers to exercise final jurisdiction in the trial of suits for the recovery of rent under section 153 (*b*) of the Bengal Tenancy Act, VIII of 1885.

NOTIFICATION.

Tippera.—No. 5611J.—25th July 1931.—In exercise of the powers conferred by sub-section (*1*) of section 13 and sub-section (*1*) of section 14 of the Bengal, Agra and Assam Civil Courts Act, 1887 (XII of 1887), the Governor in Council is pleased to direct that, with effect from the 11th October 1931, the Kasba munsifi comprising the police-station of Kasba in the district of Tippera shall be incorporated within the local limits of Brahmanbaria munsifi in the same district and the munsif shall thereafter hold his court at Brahmanbaria.

J. W. NELSON,
Secy. to the Govt. of Bengal.

LOCAL SELF-GOVERNMENT DEPARTMENT.

Medical.

Minister-in-charge: The Hon'ble Mr. Bijoy Prasad Singh Roy.

Calcutta.—No. 2281Medl.—21st July 1931.—Assistant Surgeon Dr. Gopipada Khan, Bacteriologist, Presidency General Hospital, Calcutta, was granted leave on average pay with effect from 25th May 1931 to 24th June 1931, under Fundamental Rule 81 (*b*) (*ii*).

Calcutta.—No. 2282Medl.—21st July 1931.—Dr. Pramatha Nath Ghosh, Pathologist, Presidency General Hospital, Calcutta, was appointed to act as Bacteriologist of that institution in addition to his own duties, *vice* Assistant Surgeon Dr. Gopipada Khan, on leave.

Midnapore-Khulna.—No. 2291Medl.—22nd July 1931.—Dr. P. C. Mukherji, L.R.C.P., L.R.C.S., Civil Surgeon, Midnapore, is posted as Civil Surgeon, Khulna, with effect from the date he takes over charge, *vice* Dr. Radha Raman Ghosh.

Khulna-Jessore.—No. 2292Medl. — 22nd July 1931.—Dr. Radha Raman Ghosh, Civil Surgeon, Khulna, is posted as Civil Surgeon, Jessore, with effect from the date he takes over charge, *vice* Dr. Narendra Nath Choudhury.

Jessore-Midnapore.—No. 2293Medl.—22nd July 1931.—Dr. Narendra Nath Chaudhury, Civil Surgeon, Jessore, is posted as Civil Surgeon, Midnapore, with effect from the date he takes over charge, *vice* Dr. P. C. Mukherji, L.R.C.P., L.R.C.S.

No. 2295Medl.—22nd July 1931.—The following Civil Assistant Surgeons, now officiating as Civil Surgeons, are confirmed in their appointments as Civil Surgeons, with effect from the dates noted against their names:—

Dr. Kshetra Gopal Mukherji—12th March 1931.

Dr. Rai Jnanendra Nath Chatterji Bahadur—16th March 1931.

Calcutta.—No. 2298Medl.—22nd July 1931.—Notification No. 2037Medl., dated the 3rd July 1931, appointing temporary Assistant Surgeon Dr. Ali Ahmad to act as 4th Assistant Port Health Officer, Calcutta, is hereby cancelled.

Calcutta.—No. 2319Medl.—27th July 1931.—First Class Military Assistant Surgeon R. T. M. Hayter, officiating Assistant Director, School of Tropical Medicine and Hygiene, Calcutta, and Resident Medical Officer, Carmichael Hospital for Tropical Diseases, is confirmed in his present post, with effect from the 13th November 1928.

C. W. GURNER,
Secy. to the Govt. of Bengal.

Public Health.

CALCUTTA, THE 29TH JULY 1931.

RESOLUTION—No. 1732P.H.

Minister-in-charge: The Hon'ble Mr. Bijoy Prasad Singh Roy.

Section 251 of the Calcutta Municipal Act, 1923 (Bengal Act III of 1923), provides that the Calcutta Corporation shall provide a safe and sufficient outfall, in or without Calcutta, for the proper discharge of the storm-water and sewage of Calcutta in such manner as not to cause any nuisance whether by flooding any part of Calcutta or of the country surrounding the outfall or in any other way. The plans of such outfall and the method of disposing its sewage shall be subject to the sanction of the Local Government, who may from time to time direct such alterations to be made as they may consider necessary.

The section further provides that if the outfall deteriorates by the decay of existing river channels or otherwise, the Local Government may require such order to be taken and such additions or alterations to be made to or in the outfall work at the charge of the municipal fund as they may consider necessary to ensure the safe and sufficient outfall.

The Calcutta Corporation have submitted to Government proposals for the construction of a new outfall in the river Kulti at an estimated cost of Rs. 34,00,000. With a view to the discharge of their responsibilities under section 251 of the Calcutta Municipal Act the Government of Bengal consider it desirable that they should obtain the advice of an expert committee under an independent Chairman on the suitability of these proposals. The Calcutta Corporation were invited to depute their engineers as members of this committee, but they expressed their unwillingness to allow them to serve as members of the committee unless one of their administrative officers was placed on it, and suggested that if Government could not agree to their proposal then the next best course would be for the Corporation officers to appear as witnesses and place all materials before the committee. The Government of Bengal have carefully considered the alternative suggestions, and are of opinion that the advice which they require at the present stage for the discharge of their responsibility under section 251 of the Calcutta Municipal Act is that of a committee of experts. They have therefore decided to constitute a committee composed of the following persons:—

Chairman.

The Commissioner of the Presidency Division.

Members.

Rai Shailendra Nath Banerjea Bahadur, Chief Engineer, Irrigation Department.

Mr. J. A. Stewart, M.I.C.E., Acting Chief Engineer, Calcutta Improvement Trust.

Mr. F. C. Griffin, M.INST. C.E., M.I.E. (Ind.), Chief Engineer, Public Health Department.

The terms of reference to the committee will be to examine the proposals of the Calcutta Corporation for a drainage outfall, as distinct from the scheme for the revision of the internal drainage (particulars of which will be available for their information so far as necessary for their purpose in advising on the outfall), and to report to Government—

(1) what outfall in their opinion is the best solution of the problem;

(2) whether the sewage requires any form of treatment for disposal at such outfall; and

(3) whether they consider it desirable that their report should be submitted to some external expert or experts for opinion on either or both of these points.

Ordered that the resolution be published in the *Calcutta Gazette*, and copies thereof forwarded to the Chief Executive Officer, Calcutta Corporation, and the Chairman and the members of the committee

By order of the Govt. of Bengal
(Ministry of Local Self-Govt.),

C. W. GURNER,
Secy. to the Govt. of Bengal.

NOTIFICATIONS.

Calcutta.—No. 1735P.H.—30th July 1931.—Rao Bahadur V. Gobinda Raju, B.A., Superintendent, Bengal Vaccine Laboratory, is allowed leave on average pay under rules 81 (*b*) (*ii*) and 82 (*b*) of the Fundamental Rules, for two months, with effect from the 3rd August 1931.

No. 1748P.H.—30th July 1931.—Dr. Bijoy Chandra Mukherjee, M.B., D.P.H., is appointed to act as Assistant Director of Public Health, Presidency Circle, with effect from the 30th July 1931, in place of Dr. B. B. Brahmachari, L.M.S., D.P.H., on deputation.

C. W. GURNER,
Secy. to the Govt. of Bengal.

Orders by the Director of Public Health, Bengal.

No. 10805-A.—3rd August 1931.—Under article 81 (*b*) (*ii*) of the Fundamental Rules, Babu Phanindra Krishna Das, officer-in-charge of the Dacca Public Health Laboratory, is allowed leave on average pay for ten days, with effect from the 6th August 1931.

R. B. KHAMBATA,
Director of Public Health, Bengal (offg.).

EDUCATION DEPARTMENT.

NOTIFICATIONS.

Minister-in-charge: The Hon'ble Mr. K. Nazim-ud-Din, C.I.E.

Rajshahi Divn.-Dacca Divn.—No. 2012Edn. —25th July 1931.—Khan Sahib Maulvi Shamsuddin Ahmed, Assistant Inspector of Schools for Muhammadan Education, Rajshahi Division, is reappointed to act as Assistant Inspector of Schools for Muhammadan Education, Dacca Division, with effect from the 1st June 1931, *vice* Khan Sahib Maulvi Musharraf Hossain, on deputation, or until further orders.

Chittagong.—No. 2044Edn. — 30th July 1931.—Babu Kalihar Sarkar, Lecturer in Philosophy and Logic, Chittagong College, is appointed to act in the Bengal Educational Service as Professor of Philosophy in that college, with effect from the date on which he assumes the duties of the post, during the absence, on leave, of Babu Bisweswar Dutta, or until further orders.

Malda.—No. 2049Edn.—30th July 1931.—Babu Umesh Chandra De, officiating District Inspector of Schools, Malda, was allowed leave for the period from the 24th December 1930 to the 9th April 1931 (both days inclusive), viz., privilege leave for three months and seven days, under article 260 of the Civil Service Regulations and ordinary furlough for the remaining period, under article 325 of those regulations.

This cancels the orders in notification No. 12Edn., dated 3rd January 1931.

Calcutta.—No. 2065Edn.—1st August 1931. —Babu Kiran Chandra Mitra, Demonstrator, Presidency College, Calcutta, is allowed leave on average pay for twenty-three days, with effect from the 24th August 1931, under rules 81 (*b*) (*ii*) and 82 (*b*) of the Fundamental Rules.

2. This cancels the orders in notification No. 705T.Edn., dated the 23rd June 1931.

Rajshahi-Calcutta. — No. 2068Edn. — 1st August 1931.—Babu Haridas Mukharji, Professor of Chemistry, Rajshahi College, is appointed to act as Demonstrator in Chemistry, Presidency College, Calcutta, with effect from the 24th August 1931, or any subsequent date on which he joins the appointment, during the absence, on leave, of Babu Kiran Chandra Mitra, or until further orders.

2. This cancels the orders in notification No. 702T.Edn., dated the 23rd June 1931.

Registration.

NOTIFICATIONS.

Minister-in-charge: The Hon'ble Mr. K. Nazim-ud-Din, C.I.E.

Mymensingh.—No. 639Regn.—27th July 1931.—In exercise of the power conferred by section 3 of the Bengal Muhammadan Marriages and Divorces Registration Act, 1876 (Bengal Act I of 1876), the Government of Bengal (Ministry of Education) are pleased to appoint Maulvi Saiyid Abul Mansur to be a Muhammadan Registrar within the undermentioned unions and villages, in the district of Mymensingh:—

Police-station—Mirzapur.

Union—Mirzapur III.

No.	
89	Ichail.
96	Bhadgram.
97	Bagjan.
98	Dulla Begam.
99	Dulla Munsur.
100	Musuria Ghona.
101	Guriail.
102	Postkamari.
103	Baimhati.
104	Mirzapur.
105	Andhara.
106	Sriharipara.
107	Kantaliya.
108	Burihati.
109	Ghugi.
110	Bhaora.
111	Bajo Chuattar.
112	Chuattar.
113	Asta Munsia.
114	Kuichtara.
115	Singjura.
118	Sarishadair.

Union—Warshi VI.

55	Maishamuri.
56	Pang Matang.
58	Nagarpara.
59	Mastafapur.
60	Masdai.
61	Sibpur Chanduntara.
62	Naogram.
63	Kaila Bhatta.
64	Aruha.
65	Dakhili.
66	Safarta.
67	Deolipara.
68	Uarshi.
69	Haluapara.
70	Khailsindur.
71	Karra.
72	Nagar Bhadgram.
73	Autpara.
116	Saja Nilgha.
117	Banda Kaoaljani.
118	Ag Niljha.
119	Bardhanpara.
120	Uttar Rowail.
121	Baratia.
124	Dopatia.

Union—Bahuria VII.

122	Horia.
123	Jalsuka.
125	Paikhar.
126	Fatepur.
127	Chamutia.
128	Chandpur.
129	Marisan.
130	Mayur Bhanga.
131	Aurai Telipara.
132	Gabra.
133	Bil Gazaria.
134	Dighalia.

No.
135 Kahetra.
136 Betrasin.
137 Chandulia.
138 Garamara.
139 Anailbari.
140 Gohailbari.
141 Gabra.
142 Sasadharpatti.
143 Kamarpara.
144 Araipara.
145 Keshabpur.
146 Bahuria.

Union—Gorai VIII.

147 Kot Bahuria.
149 Mir Deohata.
150 Kadim Deohata.
151 Rashid Deohata.
152 Baimail.
153 Kalimajani.
154 Path hara.
155 Rajabari.
156 Bhanuabaha.
157 Ranasail.
158 Dherua.
159 Kodalia.
160 Rahimpur.
161. Gorai.

Union—Ajgana IX.

162 Bhulua.
163 Chandpur.
164 Latifpur.
167 Boar Kumarjani.
168 Garail.
189 Goraki.
193 Kuratali.
194 Ghagrai.
195 Beltali.
196 Polashtali.
198 Ajgana.
199 Mazidpur.
200 Chiteswari.
207 Jelinea.
197 Kuripara.

Union—Tarappur X.

170 Takia Kadma.
185 Tarap-pur.
186 Danhatali.
187 Gajeswari.
188 Awralail.
189 Pakua.
190 Bastali.
191 Haritaki Tala.
192 Chitmohamadpur.
201 Panch Gaon.
202 Talipara.
203 Nayapara.
204 Gaira Betil.
205 Bangshi Nagar.
206 Bankhari.

Mymensingh.—No. 640Regn.—27th July 1931.—In exercise of the power conferred by section 2 of the Kazis' Act, 1880 (Act XII of 1880), the Government of Bengal (Ministry of Education) are pleased to appoint Maulvi Saiyid Abul Mansur to be the Kazi for the celebration of marriages and the performance of other rites and ceremonies within the undermentioned unions and villages in the district of Mymensingh:—

Police-station—Mirzapur.

Union—Mirzapur III.

No.
89 Ichail.
96 Bhadgram.
97 Bagjan.
98 Dulla Begam.
99 Dulla Munsur.
100 Musuria Ghona.
101 Guriail.
102 Postkamari.
103 Baimhati.
104 Mirzapur.
105 Andhara.
106 Sriharipara.
107 Kantaliya.
108 Burihati.
109 Ghugi.
110 Bhaora.
111 Bajo Chuattar.
112 Chuattar.
113 Asta Munsia.
114 Kuichtara.
115 Singjura.
118 Sarishadair.

Union—Warshi VI.

55 Maishamuri.
56 Pang Matang.
58 Nagarpara.
59 Mastafapur.
60 Masdai.
61 Sibpur Chanduntara.
62 Naogram.
63 Kaila Bhatta.
64 Aruha.
65 Dakhili.
66 Safarta.
67 Deolipara.
68 Uarshi.
69 Haluapara.
70 Khailsindur.
71 Karra.
72 Nagar Bhadgram.
73 Autpara.
116 Saja Nilgha.
117 Banda Kaoaljani.
118 Ag Niljha.
119 Bardhanpara.
120 Uttar Rowail.
121 Baratia.
124 Dopatia.

Union—Bahuria VII.

122 Horia.
123 Jalsuka.
125 Paikhar.
126 Fatepur.
127 Chamutia.
128 Chandpur.
129 Marisan.
130 Mayur Bhanga.
131 Anurai Telipara.
132 Gabra.
133 Bil Gazaria.
134 Dighalia.
135 Kahetra.
136 Betrasin.

No.
137 Chandulia
138 Gajamara.
139 Anailbari.
140 Gohailbari.
141 Gabua.
142 Sasadharpatti.
143 Kamarpara.
144 Araipara.
145 Keshabpur.
146 Bahuria.

Union—Gorai VIII.

147 Kot Bahuria.
149 Mir Deohata.
150 Kadim Deohata.
151 Rashid Deohata.
152 Baimail.
153 Kalimajani.
154 Path hara.
155 Rajabari.
156 Bhanuabaha
157 Ranasail.
158 Dherua.
159 Kodaha.
160 Rahimpur.
161 Gorai

Union—Ajgama IX.

162 Bhulua.
163 Chandpur.
164 Latifpur.
167 Boar Kumarjani.
168 Garail.
169 Goraki.
194 Kuratali.
194 Ghagrai.
195 Beltali.
196 Polashtali.
198 Ajgana.
199 Mazidpur.
200 Chiteswari.
207 Jelinea.
197 Kuripara.

Union—Tarappur X.

170 Takia Kadma.
185 Tarap-pur.
186 Danhatali.
187 Gajeswari.
188 Awralail.
189 Pakua.
190 Bastali.
191 Haritaki Tala.
192 Chitmohamadpur.
201 Panch Gaon.
202 Talipara.
203 Nayapara.
204 Gaira Betil.
205 Bangshi Nagar.
206 Bankhari.

Mymensingh.—No. 643Regn.—27th July 1931.—In exercise of the power conferred by section 3 of the Bengal Muhammadan Marriages and Divorces Registration Act, 1876 (Bengal Act I of 1876), the Government of Bengal (Ministry of Education) are pleased to appoint Maulvi Abdur Rahman Ahmad to be a Muhammadan Registrar within the undermentioned unions and villages, in the district of Mymensingh:—

Police-station Basail.

Union—Fulki I.

No.
1 Aishora.
2 Tirancha
3 Jhanjhania.
4 Nedhar.
5 Maitha.
6 Murakair.
7 Jashihati.
8 Ekdala.
9 Dahar.
17 Karatiapara.
18 Nerail.
19 Fulki.
20 Badiajan.
21 Khatara.
23 Balia.

Union—Kaoaljani II.

22 Kaoaljani.
24 Seharail.
28 Kalia.
90 Sunna.
91 Gilabari.
92 Bartha.
93 Dhunibari.
94 Kalyanpur.

Union—Gazana III.

89 Kangali Chheo.
95 Dariapur.
96 Kaia Madhu.
97 Deobari Gazana.
101 Pratima Banki.
102 Chhota Musa.
103 Silimpur.
104 Bara Mausa.
105 Gargobindapur.
106 Sakhupur.
107 Gazania Kirtankhola.
108 Mucharia Pathar.

Union—Jadabpur IV.

86 Berhari.
98 Jadabpur.
99 Parakanchanpur.
100 Langalia.
109 Labpabad Kalamegha
110 Kalmegha.
111 Kalidas.
112 Sola Pratima.
113 Boati.
114 Nalua.
115 Ghechua.
116 Baharia Chatal Baid.

Union—Hatibanda V.

83 Chakdaha.
84 Hatibandha.
85 Ratnapur.
117 Taktar Chala.
118 Hataia.
119 Bajhail.
120 Barachala.

Union—Basail VII

No.
27 Marjkhara.
29 Barni Kesari.
30 Banda Kamarjani.
31 Basail.
73 Balina.
75 Brahman Paril.
82 Rasara.
87 Merikpur.
88 Handulipara.

Union—Kashil VIII

10 Dapnajor.
11 Jorbari.
12 Bangra.
13 Kamtia.
14 Baghua.
15 Beuli.
16 Utter Bathuli.
25 Fulbari.
26 Baghil.
32 Saer.
33 Sthal Balla.
34 Pichuria.
35 Bahatair.
36 Beala.
37 Nakasim.
38 Banda Bhatpara.
39 Kashil.
40 Thupia.
41 Notkhola.

Mymensingh.—No. 644Regn.—27th July 1931.—In exercise of the power conferred by section 2 of the Kazis' Act, 1880 (Act XII of 1880), the Government of Bengal (Ministry of Education) are pleased to appoint Maulvi Abdur Rahman Ahmad to be the Kazi for the celebration of marriages and the performance of other rites and ceremonies within the undermentioned unions and villages, in the district of Mymensingh :—

Police-station—Basail

Union—Fulki I.

No.
1 Aishora.
2 Tiraucha
3 Jhanjhania.
4 Nedhar.
5 Maitha.
6 Murakair.
7 Jashihati.
8 Ekdala.
9 Dahar.
17 Karatiapara.
18 Nerail.
19 Fulki.
20 Badiajan.
21 Khatara.
23 Balia.

Union—Kaoaljani II

22 Kaoaljani.
24 Seharail.
28 Kalia.
90 Sunna.
91 Gilabari.
92 Bartha.
93 Dhunibari.
94 Kalyanpur.

Union—Gazaria III.

No.
89 Kaugali Chheo.
95 Dariapur.
96 Kala Madhu.
97 Deobari Gazaria
101 Pratima Banki.
102 Chhota Musa.
103 Silimpur.
104 Bara Mausa.
105 Gargobindapur.
106 Sakhupur.
107 Gazania Kirtankhola.
108 Muchuria Pathar.

Union—Jadabpur IV.

86 Berhari.
98 Jadabpur.
99 Parakanchanpur.
100 Langalia.
109 Labpabad Kalamegha.
110 Kalmegha.
111 Kalidas.
112 Sola Pratima.
113 Boati.
114 Nalua.
115 Ghechua.
116 Baharia Chatal Baid.

Union—Hatibanda V.

83 Chakdaha.
84 Hatibandha.
85 Ratnapur.
117 Taktar Chala
118 Hataia.
119 Bajhail.
120 Barachala.

Union—Basail VII.

27 Marjkhara.
29 Barni Kesari.
30 Banda Kamarjani.
31 Basail.
73 Balina.
75 Brahman Paril.
82 Rasara.
87 Merikpur.
88 Handulipara.

Union—Kashil VIII.

10 Dapnajor.
11 Jorbari.
12 Bangra.
13 Kamtia.
14 Baghua.
15 Beuli.
16 Utter Bathuli.
25 Fulbari.
26 Baghil.
32 Saer.
33 Sthal Balla.
34 Pichuria.
35 Bahatair.
36 Beala.
37 Nakasim.
38 Banda Bhatpara
39 Kashil.
40 Thupia.
41 Notkhola.

Mymensingh.—No. 647Regn.—27th July 1931.—In exercise of the power conferred by section 3 of the Bengal Muhammadan Marriages and Divorces Registration Act, 1876 (Bengal Act I of 1876), the Government of Bengal (Ministry of Education) are pleased to appoint Maulvi Abdul Barr to be a Muhammadan Registrar within the undermentioned unions and villages, in the district of Mymensingh :—

Police-station—Nagarpur.

Union—Deoli I.

No.

10 Swalpa Baratia.

Union—Bhara II

33 Pacha Satia.
212 Char Chandak.
18 Salina.

Union—Sahabatpur III

23 Bade Nalsonda.
25 Birsalil.
35 Kokadair.
49 Pach Irta.
50 Mail jani.
51 Pachuria Kazi.
55 Sahabatpur.
56 Nandapara.

Union—Goyhata V.

36 Singjora.
37 Gopinathpur.
38 Tehalia.
39 Pong Akutia.
40 Ghuni.
41 Deo Akutia.
42 Ag-Akutia.
43 Kaitola.
44 Kayarmara.
45 Syampur.
49 Pugli.
47 Sarishajani.
48 Irta.
153 Sudampara.
154 Bagherbari.
155 Danga Bausaid.
156 Danga.
157 Kalia.
158 Gheorkol.
160 Nardahi.
161 Balainagar.
162 Goyhata.
164 Bekra.
165 Srikanta.
166 Benod Bangutia.
167 Bhang Bangutia.

Union—Nagarpur VI.

142 Paisana.
144 Panan.
159 Duajani.
168 Kouabari.
169 Kathuri.
170 Nagarpur.
171 Babnapara
173 Kasadaha.
174 Andhibari.
175 Ramchandrapur.
176 Barapusa.
178 Bhalkutia.
193 Nagdha.
194 Alakdia.
172 Nanginabari.

Union—Silimabad VII

163 Silimabad.
177 Bir Baratia.
179 Tirchha.
180 Satgachha.
181 Naogaon.
182 Masuria.
183 Tebaria.
184 Tarafram Ghunipara.
185 Kachpai.
186 Dahar Pachuria.
187 Gangair.
188 Bade Dhubaria.
189 Maguria.
190 Dhubaria.
191 Sen-Maijhail.
192 Kustia.
230 Chak Godadhar.
231 Bishampur.
232 Char Bishampur.
234 Bade Kagna.
235 Balarampur.
236 Krisna Diarkol.
237 Char Kachpai.
238 Char Ghunipara.
239 Maijhail.
240 Paiksa.

Union—Duptiair VIII.

209 Dhunail.
210 Saratia Gazi.
211 Pach Achra.
212 Bhugalhat.
213 Bade Bhugalhat.
214 Jalai.
215 Haria.
216 Nabadia Mahadikhola
217 Gotabag.
218 Khash Paikail.
219 Rehai Paikail.
220 Duptiair.
221 Chhitkibari.
222 Kamutia.
223 Pong Maijhail.
224 Bag-Katari.
225 Baunia Lukia.
226 Nirchintapur.
227 Kadim-Kagna.
228 Kumarkanda.
229 Char Amuria.
233 Kanda Pachuria.

Union—Bhadra IX.

132 Badiajan.
133 Bela.
134 Patal.
135 Singdair.
136 Atia Ulain.
137 Kodalia.
138 Kaonhala.
140 Seharail.
141 Khaguria.
143 Randhunipara.
195 Ichail Balarampur.
196 Lakshidia.
197 Kasinara.

No.
198 Jalalia.
199 Dhathopa.
200 Behalikhamar.
201 Bade Nehali.
202 Patliapara.
203 Chasha Bhadra.
204 Seolai.
205 Arrah.
206 Pang Bhadra.
207 Bhadra Bhikan.
208 Tengripara.

Union—Kedarpur X.

115 Kedarpur.
117 Kulmaid.
118 Duli.
119 Mahara.
120 Kasakhola.
121 Pakutia.
122 Dhukutia.
123 Beltail.
124 Barigram.
125 Bil Bharua.
126 Sunsi.
127 Mirzapur.
128 Bhal Kutia.
129 Kol-Kushtia.
130 Bhararia.
131 Banagram.
139 Gopalpur.
145 Meghna.
146 Joybhog.
147 Chamta.
148 Mamudnagar.
149 Bhatshala.
150 Post-Kamuri.

Union—Mokna XI.

79 Konara.
80 Jaktla.
82 Pang-Baratia.
83 Ghuni.
84 Karatia.
85 Dakaitmura.
86 Gazutia.
104 Natang.
105 Gauhati.
106 Abar-Dighalia.
107 Bandha-Jalsuka.
108 Bania-Khora.
109 Gobindapur.
110 Mokna.
111 Betuajani.
112 Par-Baijora.
113 Larugram.
114 Pang-Baijura.
116 Chandpur
151 Della

Union—Ghagra XII

87 Chhota-Bagjan.
88 Rauha-Danga.
89 Seoail.
90 Manara.
91 Rautara.
92 Kandapara.
93 Pailsura.
94 Autpara.
95 Ag-Tarail.
96 Haraipara.
97 Pakutia.
98 Basta-Khola.
99 Pachh Tarail.
100 Paikpara.
101 Maijhutia.
102 Pukharia.
103 Ghagra.

Mymensingh.—No. 648Regn.—27th July 1931.—In exercise of the power conferred by section 2 of the Kazis' Act, 1880 (Act XII of 1880), the Government of Bengal (Ministry of Education) are pleased to appoint Maulvi Abdul Bari to be the Kazi for the celebration of marriages and the performance of other rites and ceremonies within the undermentioned unions and villages, in the district of Mymensingh:—

Police-station—Nagarpur.

Union—Deoli I.

No.
10 Swalpa Baratia.

Union—Bhara II.

33 Pacha Satia.
242 Char Chandak.
18 Salina.

Union—Sahabatpur III.

23 Bade Nalsonda.
25 Birsalil.
35 Kokadair.
49 Pach Irta.
50 Mail jani.
51 Pachuria Kazi.
55 Sahabatpur.
56 Nandapara.

Union—Goyhata V.

36 Singjora.
37 Gopinathpur.
38 Tehalia.
39 Pong Akutia.
40 Ghuni.
41 Deo Akutia.
42 Ag-Akutia.
43 Kaitola.
44 Kayarmara.
45 Syampur.
49 Pugli.
47 Sarishajani.
48 Irta.
153 Sudampara.
154 Bagherbari.
155 Danga Bausaid.
156 Danga.
157 Kalia.
158 Gheorkol.
160 Nardahi.
161 Balainagar.
162 Goyhata
164 Bekra.
165 Srikanta.
166 Benod Bangutia.
167 Bhang Bangutia.

Union—Nagarpur VI.

No.	
142	Paisana.
144	Panan.
159	Duajani.
168	Kounbari.
169	Kathuri.
170	Nagarpur.
171	Babnapara.
173	Kasadaha.
174	Andhibari.
175	Ramchandrapur
176	Barapusa.
178	Bhalkutia.
193	Nagdha.
194	Alakdia.
172	Nanginabari.

Union—Silimabad VII.

163	Silimabad.
177	Bir Baratia.
179	Tirchha.
180	Satgachha.
181	Naogaon.
182	Masuria.
183	Tebaria.
184	Taraftam Ghunipara
185	Kachpai.
186	Dahar Pachuria.
187	Gangair.
188	Bade Dhubaria.
189	Maguria.
190	Dhubaria.
191	Sen-Maijhail.
192	Kustia.
230	Chak Godadhar.
231	Bishampur.
232	Char Bishampur.
234	Bade Kagna.
235	Balarampur.
236	Krisna Diarkol.
237	Char Kachpai.
238	Char Ghunipara.
239	Maijhail
240	Paiksa.

Union—Duptiair VIII.

209	Dhunail.
210	Saratia Gazi.
211	Pach Achra.
212	Bhugalhat.
213	Bade Bhugalhat.
214	Jalai.
215	Haria.
216	Nabadia Mahadikhola.
217	Gotabag.
218	Khash Paikail.
219	Rehai Paikail.
220	Duptiair.
221	Chhitkibari.
222	Kamutia.
223	Pong Maijhail.
224	Bag-Katari.
225	Baunia Lukia.
226	Nirchintapur.
227	Kadim-Kagna.
228	Kumarkanda.
229	Char Amuria.
233	Kanda Pachuria.

Union—Bhadra IX.

No.	
132	Badiajan.
133	Bela.
134	Patal.
135	Singdair.
136	Atia Ulain.
137	Kodalia.
138	Kaonhala.
140	Seharail.
141	Khaguria.
143	Randhunipara.
195	Ichail Balarampur
196	Lakshidia.
197	Kasinara.
198	Jalalia.
199	Dhathopa.
200	Behalikhamar.
201	Bade Nehali.
202	Patliapara.
203	Chasha Bhadra.
204	Seolai.
205	Arrah.
206	Pang Bhadra.
207	Bhadra Bhikan
208	Tengrimara.

Union—Kedarpur X

115	Kedarpur.
117	Kalmaid.
118	Duli.
119	Mahara.
120	Kasakhola.
121	Pakutia.
122	Dhukutia.
123	Beltail.
124	Barigram.
125	Bil Bharua
126	Sunsi.
127	Mirzapur.
128	Bhal Kutia.
129	Kol-Kushtia.
130	Bhararia.
131	Banagram.
139	Gopalpur.
145	Meghna.
146	Joybhog.
147	Chamta.
148	Mamudnagar.
149	Bhatshala.
150	Post-Kamuri.

Union—Mokna XI.

79	Konara.
80	Jaktla.
82	Pang-Baratia.
83	Ghuni.
84	Karatia.
85	Dakaitmura.
86	Gazutia.
104	Natang.
105	Gauhati.
106	Abar-Dighalia.
107	Bandha-Jalsuka.
108	Bania-Khora.
109	Gobindapur.
110	Mokna.
111	Betuajani.
112	Par-Baijora.
113	Larugram
114	Pang-Baijura.
116	Chandpur.
151	Della

Union—Ghagra XII.

No.
87 Chhôta-Bagjan.
88 Rauha-Danga.
89 Seoail.
90 Manara.
91 Rautara.
92 Kandapara.
93 Pailsura.
94 Autpara.
95 Ag-Tarail.
96 Haraipara.
97 Pakutia.
98 Basta-Khola.
99 Pachh Tarail.
100 Paikpara.
101 Maijhutia.
102 Pukharia.
103 Ghagra.

Mymensingh.—No. 651Regn.—27th July 1931.—In exercise of the power conferred by section 3 of the Bengal Muhammadan Marriages and Divorces Registration Act, 1876 (Bengal Act I of 1876), the Government of Bengal (Ministry of Education) are pleased to appoint Maulvi Saiyid Jawad Ali to be a Muhammadan Registrar within the undermentioned villages, in the district of Mymensingh:—

Police-station—Tangail.

No.
156 Binduria.
324 Bahali.
184 Boruha.
177 Ghuni Keshab.
187 Bandabari.
125 Patrail.
134 Boaljan.
140 Naduria.
172 Sunbari.
168 Sarai Barai.
164 Fazilhati.
145 Jangalia.
130 Bandapara.
314 Zinai.
326 Tengiri.
180 Kuichamuri.
182 Atia Barai.
112 Kumulli Lakshmi.
126 Nal Sandhya.
142 Rupshi.
152 Kathalia.
157 Hinga Nagar.
171 Aug Elashin.
158 Singragi.
166 Maminnagar.
108 Birkushia.
318 Gagair.
328 Subantali.
179 Rukshijadra.
181 Mamudpur.
186 Bhurbhuria.
139 Arra.
127 Dhultia.
175 Binnabari.
170 Lakshmikul.
159 Mushuria.
165 Nijpara.
131 Mirkumalli.
322 Tejpur.
123 Chinakhola.
178 Silimpur.

No.
183 Gamjani.
185 Charpara.
128 Jalalia.
154 Gayasin.
174 Sakaijora.
160 Lalhara.
163 Deluakandi.
132 Bhabki.
319 Majutia.
317 Pakulla 2nd
176 Pirizpur.
188 Parijatpur.
124 Mangalhai.
136 Dashaika.
133 Naluka.
141 Teghari.
155 Gajiabari.
173 Pach Elashin.
161 Fultara.
162 Kamar Noagaon.
147 Madar Khol.
129 Alsha.

Police-station Nagarpur.

8 Betarail.
5 Babupur.
22 Muradpatti.
57 Nal Sandabet.
64 Taratia Kumulli
63 Paharpur.
60 Ghonapara
59 Binnoja.
58 Dara Kumulli.
57 Nalsandhya
24 Bhatpara.
53 Chechuajani.
51 Ghunigajamati.
26 Arra.
20 Bashkhitai.
21 Ishipasa.
11 Karail.
9 Chaktail.
7 Maithain.
6 Alapur.
4 Bengarail.
14 Sthalbaysa.
13 Teria.
17 Pach Dewli.
16 Atraf.
3 Jhunkai.
2 Teghari Brahman Khola.
243 Sahajani.
30 Chandak.
1 Augdighulia.
241 Mir Kuthia.
31 Sakhail.
29 Uladab.
19 Pachtara.
27 Salil Arra.
28 Bharra.
52 Sarangpur.
81 Pachuria.
34 Choubaria.
32 Deojan salil.

Mymensingh.—No. 652Regn.—27th July 1931.—In exercise of the power conferred by section 2 of the Kazis' Act, 1880 (Act XII of 1880), the Government of Bengal (Ministry of Education) are pleased to appoint Maulvi Saiyid Jawad Ali to be the Kazi for the celebration of marriages and the performance of

other rites and ceremonies within the undermentioned villages, in the district of Mymensingh:—

Police-station—Tangail.

No.	
156	Binduria.
324	Bahali.
184	Boruha.
177	Ghuni Keshab
187	Bandabari.
125	Patrail.
134	Boaljan.
140	Naduria.
172	Sunbari.
168	Sarai Barai.
164	Fazilhati.
145	Jangalia.
130	Bandapara.
314	Zinai.
326	Tengiri.
180	Kuichamuri.
182	Atia Barai.
112	Kumulli Lakshmi.
126	Nal Sandhya.
142	Rupshi.
152	Kathalia.
157	Hinga Nagar.
171	Aug Elashin.
158	Singragi.
166	Maminnagar.
108	Birkushia.
318	Gagair.
328	Subantali.
179	Rukshijadra.
181	Mamudpur.
186	Bhurbhuria.
139	Arra.
127	Dhultia.
175	Binnahari.
170	Lakshmikul.
159	Mushuria.
165	Nijpara.
131	Mirkumalli.
322	Tejpur.
123	Chinakhola.
178	Silimpur.
183	Gamjani.
185	Charpara.
128	Jalalia.
154	Gayasin.
174	Sakaijora.
160	Lalhara.
163	Deluakandi.
132	Bhabki.
319	Majutia.
317	Pakulla 2nd.
176	Pirizpur.
188	Parijatpur.
124	Mangalhai.
136	Dashaika.
133	Naluka.
141	Teghari.
155	Gajiabari.
173	Pach Elashin.
161	Fultara.
162	Kamar Nongaon.
147	Madar Khol.
129	Alsha.

Police-station—Nagarpur.

No.	
8	Betarail
5	Babupur.
22	Murapatti.
57	Nal Sandaber.
64	Taratia Kumulli.
63	Paharpur.
60	Ghonapara.
59	Binnoja.
58	Dara Kumulli.
57	Nalsandhya.
24	Bhatpara.
53	Chechuajani.
54	Ghunigajamati.
26	Arra.
20	Bashkhirai.
21	Ishipasa.
11	Karail.
9	Chaktail.
7	Maithain.
6	Alapur.
4	Bengarail.
14	Sthalbaysa.
13	Teria.
17	Pach Dewli.
16	Atraf.
3	Jhunkai.
2	Teghari Brahman Khola.
243	Sahajani.
30	Chandak.
1	Augdighulia.
241	Mir Kuthia.
31	Sakhail.
29	Uladab.
19	Pachtara.
27	Salil Arra.
28	Bharra.
52	Sarangpur.
81	Pachuria.
34	Choubaria.
32	Deojan salil.

Faridpur.—No. 657Regn. — 27th July 1931.—In exercise of the power conferred by section 3 of the Bengal Muhammadan Marriages and Divorces Registration Act, 1876 (Bengal Act I of 1876), the Government of Bengal (Ministry of Education) are pleased to appoint Maulvi Abdul Hakim temporarily to be a Muhammadan Registrar within the police-station of Janzira, in the district of Faridpur, during the absence, on leave, of Maulvi A. M. Md. Abdur Rahaman, or until further orders.

Faridpur.—No. 658Regn. — 27th July 1931.—In exercise of the power conferred by section 2 of the Kazis' Act, 1880 (Act XII of 1880), the Government of Bengal (Ministry of Education) are pleased to appoint Maulvi Abdul Hakim temporarily to be the Kazi for the celebration of marriages and the performance of other rites and ceremonies within the police-station of Janzira, in the district of Faridpur, during the absence, on leave, of Maulvi A. M. Md. Abdur Rahaman, or until further orders.

A. J. DASH,
Secy. to the Govt. of Bengal.

Orders by the Inspector-General of Registration, Bengal.

Murshidabad.—No. 491.—24th July 1931.—Maulvi Saiyid Abul Matahar, Sub-Registrar of Kandi, in the district of Murshidabad, is allowed leave on average pay for sixteen days, under rule 81 (*b*) (*ii*) of the Fundamental Rules, with effect from the 27th July 1931.

Murshidabad.—No. 492.—24th July 1931.—Maulvi Khundkar Muhammad Ziul Ahsan, Sub-Registrar attached to Berhampore, Murshidabad, is appointed to act as Sub-Registrar of Kandi in the same district, with effect from the date on which he joins the appointment, during the absence, on leave, of Maulvi Saiyid Abul Matahar, the permanent incumbent, or until further orders.

No. 493.—29th July 1931.—Maulvi Ayub Ali Chaudhuri, Sub-Registrar, is allowed leave on average pay for two months, under rule 81 (*b*) (*ii*) of the Fundamental Rules, in extension of the leave granted to him in this department notification No. 151, dated the 2nd March 1931.

Mymensingh.—No. 494.—29th July 1931.—Maulvi Mataheral Karim, 2nd Joint Sub-Registrar of Kishoreganj, in the district of Mymensingh, is allowed leave on average pay for twenty-five days, under rule 81 (*b*) (*ii*) of the Fundamental Rules, with effect from the 12th July 1931.

Chittagong.—No. 495.—29th July 1931.—Babu Bhupati Ranjan Sen, Sub-Registrar of Lamburhat, in the district of Chittagong, is appointed to be Sub-Registrar of Kantafakir's Hat in the same district.

Chittagong.—No. 496.—29th July 1931.—Babu Hemendu Bikash Ray, Sub-Registrar of Kantafakir's Hat, in the district of Chittagong, is appointed to be Sub-Registrar of Lamburhat in the same district.

No. 497.—29th July 1931.—Babu Pramatha Nath Mukharji, Sub-Registrar, is allowed leave on average pay for one month, under rule 81 (*b*) (*ii*) of the Fundamental Rules, in extension of the leave granted to him in this department notification No. 426, dated the 20th June 1931.

Bogra.—No. 498.—29th July 1931.—Maulvi Dilwar Ali Khan, Sub-Registrar of Sharikandi, in the district of Bogra, on leave, is appointed to be Sadar 3rd Joint Sub-Registrar of Bogra.

Bogra-Hooghly.—No. 499.—29th July 1931.—Babu Baidya Nath Dutt, Sadar 3rd Joint Sub-Registrar of Bogra, is appointed to be Sub-Registrar of Arambagh, in the district of Hooghly.

Calcutta.—No. 500.—29th July 1931.—Babu Saurendra Nath Sen, Probationary Sub-Registrar of Calcutta, is allowed leave on average pay for fifteen days, under Subsidiary Rule 288 framed under rule 10[illegible] (*b*) of the Fundamental Rules, with effect from the 13th July 1931.

Rangpur-Faridpur.—No. 501.—29th July 1931.—Maulvi Saiyid Abu Zafar, Sub-Registrar of Jaldhaka, in the district of Rangpur, on leave, is appointed to act, until further orders, as Sub-Registrar of Kotalipara, in the district of Faridpur, with effect from the date on which he joins the appointment.

Dacca.—No. 502.—29th July 1931.—Maulvi Khwajah Muhammad Salim, Sub-Registrar attached to Dacca, is allowed leave on average pay for one month, under rule 81 (*b*) (*ii*) of the Fundamental Rules, with effect from the 22nd June 1931, or from any subsequent date on which he avails himself of it.

Faridpur.—No. 503.—29th July 1931.—Maulvi Shaikh Yusuf Ali, Sub-Registrar of Baliakandi, in the district of Faridpur, is allowed leave on average pay for two months, under rule 81 (*b*) (*ii*) of the Fundamental Rules, in extension of the leave granted to him in this department notification No. 378, dated the 5th June 1931.

24-Parganas.—No. 504.—29th July 1931.—Maulvi Saiyid Mustafa Ali, Sub-Registrar of Basirhat, in the district of the 24-Parganas, is allowed leave on average pay for three months, under rule 81 (*b*) (*ii*) of the Fundamental Rules, with effect from the 16th June 1931.

Faridpur.—No. 505.—29th July 1931.—Babu Surendra Lal Dutt, while Sub-Registrar of Kasiani, in the district of Faridpur, is allowed leave on average pay for five months, under rule 81 (*b*) (*ii*) of the Fundamental Rules, with effect from the 15th April 1931.

This cancels this department notification No. 393, dated the 10th June 1931, granting leave on average pay for two months and twenty-one days to Babu Surendra Lal Dutt, Sub-Registrar of Kasiani, Faridpur, from the 25th April 1931.

Nadia.—No. 506.—29th July 1931.—Babu Jitendra Kumar Mitra, Sub-Registrar of Chakdah, in the district of Nadia, is allowed leave on average pay for twenty-seven days, under rule 81 (*b*) (*ii*) of the Fundamental Rules, with effect from the 3rd August 1931.

Nadia.—No. 507.—29th July 1931.—Babu Narmada Ranjan Das Gupta, Probationary Sub-Registrar of Nadia, is appointed to act as Sub-Registrar of Chakdah, in the district of Nadia, with effect from the date on which he joins the appointment, during the absence, on leave, of the permanent incumbent, or until further orders.

Murshidabad.—No. 508.—29th July 1931.—Babu Kamala Kinkar Ray Chaudhuri, Probationary Sub-Registrar of Berhampore, Murshidabad, is allowed leave on average pay for four days, under Subsidiary Rule 288 framed under rule 104 (*b*) of the Fundamental Rules with effect from the 23rd June 1931.

24-Parganas-Midnapore.—No. 509.—29th July 1931.—Babu Prabhas Chandra Banarji, officiating Sub-Registrar of Basirhat, in the district of the 24-Parganas, is appointed to be Sub-Registrar of Sabong, in the district of Midnapore.

Calcutta-Bakarganj.—No. 510.—29th July 1931.—Babu Nakuleswar Chakrabatti, Probationary Sub-Registrar of Calcutta, while officiating as Sub-Registrar of Bamna, in the district of Bakarganj, is allowed leave on average pay for twenty-seven days, under Subsidiary Rule 288 framed under rule 104 (*b*) of the Fundamental Rules, with effect from the 21st July 1931.

Dacca-Bakarganj.—No. 511.—29th July 1931.—Babu Hara Prosad Chakrabatty, Probationary Sub-Registrar, Dacca, is appointed to act, until further orders, as Sub-Registrar of Bamna, in the district of Bakarganj, with effect from the date on which he joins the appointment.

S. AHMED,
Inspector-General of Regn., Bengal.

FINANCE DEPARTMENT.

Audit.

ADDENDA AND CORRIGENDA.

No. 3100F.—24th July 1931.—The following corrections, which have been authorised, are published for general information:—

Fundamental and Subsidiary Rules, 1st Edition (Reprint), 1929.

Page 125—S. R. 221.—*Substitute* the following for S. R. 221:—

Before a gazetted Government servant can be granted leave or an extension of leave on medical certificate, he must obtain a certificate accompanied by a statement of his case in the following form:—

Statement of the case of

Name (to be filled in by the applicant in the presence of the Civil Surgeon or official medical attendant).

Appointment

Age

Total service

Service in India

Previous periods of leave of absence on medical certificate

Habits

Disease

Surgeon of
Medical Officer at
after careful personal examination of the case hereby certify that
is in a bad state of health, and I solemnly and sincerely declare that according to the best of my judgment a period of absence from duty is essentially necessary for the recovery of his health and recommend that he may be granted months' leave.

Dated

The

Civil Surgeon,
or Official Medical Attendant.

NOTE.—This form should be adhered to as closely as possible and should be filled in after the signature of the applicant has been taken. The certifying officer is not at liberty to certify that the applicant requires a change from or to a particular locality, or that he is not fit to proceed to a particular locality. Such certificates should only be given at the explicit desire of the administrative authority concerned, to whom it is open to decide, when an application on such grounds has been made to him, whether the applicant should go before a Medical Board to decide the question of his fitness for service.

Page 127—S. R. 229.—*Insert* the following as S. R. 229A:—

The following form of medical certificate is prescribed for non-gazetted Government servants in superior service recommended for leave or extension or commutation of leave:—

Signature of applicant
(to be filled in by the applicant in the presence of a Government medical officer or a registered medical practitioner).

I, after careful personal examination of the case hereby certify that
whose signature given above, is suffering from
and I consider that a period of absence from duty of is absolutely necessary for the restoration of his health.

Dated

The

Government Medical Officer
or Registered Medical Practitioner.

NOTE 1.—The nature and probable duration of the illness should be specified, *vide* Subsidiary Rule 227.

NOTE 2.—This form should be adhered to as closely as possible, and should be filled in after the signature of the applicant has been taken. The certifying officer is not at liberty to certify that the applicant requires a change to (or from) a particular locality, or that he is not fit to proceed to a particular locality. Such certificate should only be given at the explicit desire of the administrative authority concerned, to whom it is open to decide, when an application on such grounds has been made to him, whether the applicant should go before a Medical Board to decide the question of his fitness for service.

Page 268—Appendix No. 7.—*Insert* the following as note 2, numbering the existing one as note 1 in the second column against "Darjeeling district, except the Siliguri subdivision and Calcutta, etc.," the first item in this Appendix.

NOTE 2.—Officers whose headquarters are within the limits of jurisdiction of the Calcutta Corporation are not entitled to this concession in Calcutta.

E. N. BLANDY,

Secy. to the Govt. of Bengal.

COMMERCE DEPARTMENT.

NOTIFICATIONS.

No. 3609Com.—27th July 1931.—Mr. H. C. Bose, District Magistrate of Burdwan, is appointed to be a member of the Mining Board, Bengal, constituted under sub-section (*1*) of section 10 of the Indian Mines Act, 1923 (IV of 1923), *vice* Mr. J. D. V. Hodge, resigned.

No. 3632Com.—27th July 1931.—In exercise of the power conferred by section 37 of the Indian Factories Act, 1911 (XII of 1911), the Governor in Council is pleased to make the following amendments to the Bengal Factories Rules, 1928, published with Government notification No. 265T. Com., dated the 7th May 1928, namely—

For rules 33 and 34 the following shall be substituted:—

33. **Latrines.**—Every factory not exempted under the proviso to section 13 shall be provided with latrine accommodation on the following scale, viz.—

(1) In factories where females are employed there shall be one sanitary convenience for every 25 females.

(2) In factories where males are employed there shall be one sanitary convenience for every 25 males; provided that in factories where the number of males employed exceeds 100 and sufficient urinal accommodation is also provided, it shall be sufficient if there is one sanitary convenience for every 25 males up to the first 100, and one for every 50 thereafter.

In calculating the number of conveniences required under this rule, any odd number of persons less than 25 or 50, as the case may be, shall be reckoned as 25 or 50.

34. (*1*) Every sanitary convenience in a factory shall be designed and constructed in a manner approved by the Chief Inspector of Factories or the Director of Public Health, and shall be maintained in a manner approved by the Inspector.

(*2*) Every sanitary convenience and urinal in a factory shall be kept in a clean and sanitary state, and shall not communicate with any work-room except through the open air or through an intervening ventilated space.

(*3*) Every sanitary convenience in a factory shall be under cover and so partitioned off as to secure privacy, and if for the use of females shall have a proper door and fastenings.

(*4*) The sanitary conveniences in a factory shall be so arranged and maintained as to be conveniently accessible to all persons employed therein at all times during their employment.

(*5*) Where persons of both sexes are employed, the conveniences for each sex shall be so placed or so screened that the interior shall not be visible, even when the door of any convenience is open, from any place where persons of the other sex have to work or pass, and, if the conveniences for one sex adjoin those for the other sex, the approaches shall be separate.

E. N. BLANDY,

Secy. to the Govt. of Bengal

MARINE DEPARTMENT.

NOTIFICATION

No. 31Mne.—29th July 1931.—The following by-law regulating the discharge of dangerous petroleum in bulk in the Port of Calcutta, made by the Commissioners under sub-section (*1*) of section 126 and section 127 of the Calcutta Port Act, 1890 (Ben Act III of 1890), subject to the confirmation of the Local Government, is published for general information, as required by sub-section (*4*) of the said section 126.

2. The by-law will be taken into consideration on the expiry of a month after the first publication of this notification in the *Calcutta Gazette*, and any suggestion or objection with regard thereto received by the undersigned within that period will be considered:—

Draft By-law.

"Without the previous permission in writing of the Commissioners, no person shall use or cause to be used steam generated in the boilers of a vessel for the purpose of discharging dangerous petroleum in bulk within the Port.

A breach of this by-law shall be punishable with a fine which may extend to Rs. 500."

E. N. BLANDY,

Secy. to the Govt. of Bengal.

PUBLIC WORKS DEPARTMENT.

Establishment.

NOTIFICATION.

Minister-in-charge: The Hon'ble Khan Bahadur Maulvi K. G. M. Faroqui.

No. 45.—29th July 1931.—Babu Ram Nath Chatarji, Assistant Engineer, Chittagong Division, is, on return from leave, posted to the Northern Circle.

L. R. FAWCUS,

Secy. to the Govt. of Bengal.

DEPARTMENT OF AGRICULTURE AND INDUSTRIES.

Agriculture.

NOTIFICATION.

Minister-in-charge: The Hon'ble Khan Bahadur Maulvi K. G. M. Faroqui.

No. 3306Agri.—3rd August 1931.—Mr. S. G. Sharangpani, Assistant Economic Botanist, Bengal, is allowed leave, on medical certificate, for four months on average pay, under the proviso to rule 81 (*b*) (*ii*) of the Fundamental Rules, in extension of the leave granted to him under the orders of the 14th March 1931.

Excise.

NOTIFICATION.

Minister-in-charge: The Hon'ble Mr. Bijoy Prasad Singh Roy.

Calcutta.—No. 3216Ex.—29th July 1931.—Maulvi Sultan Muhammad, Superintendent of Excise and Salt, is, on the expiry of his leave, temporarily posted to the district of Calcutta and placed in charge of the Distillery Branch.

L. R. FAWCUS,

Secy. to the Govt. of Bengal.

Orders by the Registrar of Co-operative Societies, Bengal.

No. 4-L.—24th July 1931.—Whereas I am of opinion, as the result of an enquiry held into the constitution, working and financial condition of the Nawpara Samabaya Krishi Bank (registered No. 22 (Murshidabad) of 1927), in the subdivision Kandi in the district of Murshidabad, under sub-section (*1*) of section 35 of the Co-operative Societies Act, II of 1912, that the society ought to be dissolved.

Now, therefore, in exercise of the power conferred by sub-section (*1*) of section 39 of the same Act, I hereby cancel the registration of the said society.

And further, in exercise of the power conferred by sub-section (*1*) of section 42 of the same Act, I hereby appoint the Departmental Officer in charge of Kandi Circle to be liquidator of the said society.

No. 5-L.—25th July 1931.—Whereas I am of opinion, as the result of an enquiry held into the constitution, working and financial condition of the Ramchandrapur Samabaya Samiti (registered No. 57 (Jessore) of 1927), in the subdivision Bongong in the district of Jessore, under sub-section (*1*) of section 35 of the Co-operative Societies Act, II of 1912, that the society ought to be dissolved.

Now, therefore, in exercise of the power conferred by sub-section (*1*) of section 39 of the same Act, I hereby cancel the registration of the said society.

And further, in exercise of the power conferred by sub-section (*1*) of section 42 of the same Act, I hereby appoint the Departmental Officer in charge of the Jessore Sadar Circle to be liquidator of the said society.

No. 6-L.—25th July 1931.—Whereas I am of opinion, as the result of an enquiry held into the constitution, working and financial condition of the Dakshin Mithachhari Jautha Bank (registered No. 256 of 1926), in the district of Cox's Bazar, under sub-section (*1*) of section 35 of the Co-operative Societies Act, II of 1912, that the society ought to be dissolved.

Now, therefore, in exercise of the power conferred by sub-section (*1*) of section 39 of the same Act, I hereby cancel the registration of the said society.

And further, in exercise of the power conferred by sub-section (*1*) of section 42 of the same Act, I hereby appoint the Departmental Officer in charge of Cox's Bazar Circle to be liquidator of the said society.

ERRATUM.

In notification No. 163-L., dated the 6th June 1931, published in the *Calcutta Gazette* at page 739, Part I of the 25th June 1931, relating to the appointment of liquidator of Potajia Co-operative Bank, *read* "Senior Departmental Officer, Shahzadpur" *for* "Departmental Officer in charge of Shahzadpur Circle."

S. K. GANGULY,

Regr., Co-operative Societies, Bengal.

REVENUE DEPARTMENT.

Land Revenue.

NOTIFICATIONS.

No. 9375 L.R.—31st July 1931.—Babu Chinta Haran Das Gupta, Deputy Collector, is allowed leave on average pay for the period from the 4th May 1931 to the 5th June 1931, under rule 81 (*b*) (*ii*) of the Fundamental Rules, in extension of the leave already granted to him in this department notification No. 4480 L.R., dated the 27th March 1931.

Rangpur.—No. 9474 L.R.—1st August 1931.—In exercise of the powers conferred by section 101 (*1*) of the Bengal Tenancy Act, 1885 (Act VIII of 1885), the Governor in Council is pleased to order that a survey

shall be made and a record-of-rights prepared in respect of all lands comprised within the administrative boundaries of the district of Rangpur.

The particulars to be recorded in the record-of-rights shall be the following:—

(*a*) the names of each tenant or occupant;

(*b*) the class or classes to which each tenant belongs, that is to say, whether he is a tenure-holder, raiyat holding at fixed rates, settled raiyat, occupancy raiyat, non-occupancy raiyat, or under-raiyat with or without a right of occupancy, and if he is a tenure-holder, whether he is a permanent tenure-holder or not, and whether his rent is liable to enhancement during the continuance of his tenure;

(*c*) the situation and quantity and one or more of the boundaries of the land held by each tenant or occupier;

(*d*) the name of each tenant's landlord;

(*e*) the name of each proprietor, in the local area or estate with the character and extent of his interest, and the situation and quantity and one or more of boundaries of the lands, if any, which are his private lands as defined in Chapter XI of the Act;

(*f*) the rent and cess lawfully payable by each tenant at the time the record-of-rights is being prepared;

(*g*) the amount payable in respect of any rights of pasturage, forest rights, rights over fisheries and the like at the time the record-of-rights is being prepared, the conditions and incidents appertaining to such rights, and if the amount is a gradually increasing amount, the time at which and the steps by which it increases;

(*h*) the mode in which that rent has been fixed, whether by contract, by order of a Court, or otherwise;

(*i*) if the rent is a gradually increasing rent, the time at which, and the steps by which, it increases;

(*j*) the rights and obligations of each tenant and landlord in respect of—

(*i*) the use by tenants of water for agricultural purposes, whether obtained from a river, jhil, tank or well or any other source of supply, and

(*ii*) the repair and maintenance of appliances for securing a supply of water for the cultivation of the land held by each tenant, whether or not such appliances be situated within the boundaries of each land;

(*k*) the special conditions and incident, if any, of the tenancy;

(*l*) any right-of-way, or other easement attaching to the land for which record-of-rights is being prepared;

(*m*) if the land is claimed to be held rent-free, whether or not rent is actually paid, and if not paid, whether or not the occupant is entitled to hold the land without payment of rent, and, if so entitled, under what authority;

Provided that if lands are not used for purposes connected with agriculture or horticulture, it shall be sufficient to record that fact together with the prescribed particulars relating to the occupant, the landlord and the tenancy.

Malda.—No. 9475L.R.—1st August 1931.—Under section 3 of the Bengal Survey Act, 1875 (Bengal Act V of 1875), the Governor in Council is pleased to order that a survey shall be made of all lands which are comprised within the external boundaries of the temporarily settled private estate "Deara Tehara," tauzi No. 547 of the Malda Collectorate, and that the boundaries of the estate, tenure, mauza and field be demarcated on the lands so to be surveyed.

Malda.—No. 9476L.R.—1st August 1931.—In exercise of the powers conferred by section 101 (*2*) (*d*) of the Bengal Tenancy Act (Act VIII of 1885), the Governor in Council is pleased to order that a survey shall be made and a record-of-rights prepared in respect of all lands which are comprised in temporarily settled private estate "Deara Tehara," tauzi No. 547 of Malda Collectorate and situated in police-station Manickchak in the district of Malda.

The particulars to be recorded in the record-of-rights shall be the following:—

(*a*) the name of each tenant or occupant;

(*b*) the class or classes to which each tenant belongs, that is to say, whether he is a tenure-holder, raiyat holding at fixed rates, settled raiyat, occupancy raiyat, non-occupancy raiyat, or under-raiyat with or without a right of occupancy, and if he is a tenure-holder, whether he is a permanent tenure-holder or not, and whether his rent is liable to enhancement during the continuance of his tenure;

(*c*) the situation and quantity and one or more of the boundaries of the land held by each tenant or occupier;

(*d*) the name of each tenant's landlord;

(*e*) the name of each proprietor in the local area or estate with the character and extent of his interest, and the situation and quantity and one or more of boundaries of the lands, if any, which are his private lands as defined in Chapter XI of the Act;

(*f*) the rent lawfully payable by each tenant at the time the record-of-rights is being prepared;

(*g*) the amount payable in respect of any rights of pasturage, forest rights, rights over fisheries and the like at the time the record-of-rights is being prepared, the conditions and incidents appertaining to such rights, and if the amount is a gradually increasing amount, the time at which and the increments by which it increases;

(*h*) the mode in which that rent has been fixed, whether by contract, by order of a Court, or otherwise;

(*i*) if the rent is a gradually increasing rent, the time at which, and the steps by which, it increases;

(*j*) the rights and obligations of each tenant and landlord in respect of—

(*i*) the use by tenants of water for agricultural purposes, whether obtained from a river, jhil, tank or well or any other source of supply, and

(*ii*) the repair and maintenance of appliances for securing a supply of water for the cultivation of the land held by each tenant, whether or not such appliances be situated within the boundaries of such land;

(*k*) the special conditions and incidents, if any, of the tenancy;

(*l*) any right-of-way or other easement attaching to the land for which a record-of-rights is being prepared;

(*m*) if the land is claimed to be held rent-free, whether or not rent is actually paid, and if not paid, whether or not the occupant is entitled to hold the land without payment of rent, and, if so entitled, under what authority:

Provded that, if lands are not used for purposes connected with agriculture or horticulture, it shall be sufficient to record that fact, together with the prescribed particulars relating to the occupant, the landlord and the tenancy.

Bankura.—No. 9477 L.R.—1st August 1931.—Under section 3 of the Bengal Survey Act, 1875 (Act V of 1875), the Governor in Council is pleased to order that a survey shall be made of lands comprised in the area known as Char Dubli, which is an alluvial accretion to the permanently settled estate bearing tauzi No. 995 of the district Bankura and situated in the district of Bankura and that the boundaries of estates, tenures, mauzas and fields be demarcated on the lands so to be surveyed.

Bankura.—No. 9478 L.R.—1st August 1931.—In exercise of the powers conferred by section 101 (*2*) (*d*) of the Bengal Tenancy Act (Act VIII of 1885), the Governor in Council is pleased to order that a survey shall be made and a record-of-rights prepared in respect of all the lands comprised in the area known as Char Dubli which is an alluvial accretion to the permanently settled estate bearing tauzi No. 995 of the district Bankura and situated in the district of Bankura.

The particulars to be recorded in the record-of-rights shall be the following:—

(*a*) the name of each tenant or occupant;

(*b*) the class or classes to which each tenant belongs, that is to say, whether he is a tenure-holder, raiyat holding at fixed rates, settled raiyat, occupancy raiyat, non-occupancy raiyat, or under-raiyat with or without a right of occupancy, and if he is a tenure-holder, whether he is a permanent tenure-holder or not, and whether his rent is liable to enhancement during the continuance of his tenure;

(*c*) the situation and qantity and one or more of the boundaries of the land held by each tenant or occupier;

(*d*) the name of each tenant's landlord;

(*e*) the name of each proprietor in the local area or estate with the character and extent of his interests, and the situation and quantity and one or more of boundaries of the lands, if any, which are his private lands as defined in Chapter XI of the Act.

(*f*) the rent and cess lawfully payable by each tenant at the time the record-of-rights is being prepared;

(*g*) the amount payable in respect of any rights of pasturage, forest rights, rights over fisheries and the like at the time the record-of-rights is being prepared, the conditions and incidents appertaining to such rights, and if the amount is a gradually increasing amount, the time at which and the steps by which it increases;

(*h*) the mode in which that rent has been fixed, whether by contract, by order of a Court, or otherwise;

(*i*) if the rent is a gradually increasing rent, the time at which, and the steps by which, it increases;

(*j*) the rights and obligations of each tenant and landlord in respect of—

(*i*) the use by tenants of water for agricultural purposes, whether obtained from a river, jhil, tank or well or any other source of supply, and

(*ii*) the repair and maintenance of appliances for security, a supply of water for the cultivation of the land held by each tenant, whether or not such applicances is situated within the boundaries of such land;

(*k*) the special conditions and incidents, if any, of the tenancy;

(*l*) any right-of-way or other easement attaching to the land for which a record-of-rights is being prepared;

(*m*) if the land is claimed to be held rent-free, whether or not rent is actually paid, and if not paid, whether or not the occupant is entitled to hold the land without payment of rent, and, if so entitled, under what authority:

Provided that if lands are not used for purposes connected with agriculture or horticulture, it shall be sufficient to record that fact together with the prescribed particulars relating to the occupant, the landlord and the tenancy.

Land Acquisition.

NOTIFICATIONS.

Tippera.—No. 9144L.A.—27th July 1931.—Whereas it appears to the Governor in Council that land is likely to be required to be taken by Government at the public expense for a public purpose, viz., for setting up a stone crusher for crushing stones required in connection with the improvement of the Chittagong Trunk Road, in the village of Lalmai Pahar, pargana Meherkol, zilla Tippera, it is hereby notified that for the above purpose a piece of land measuring more or less, 1·05 acres, comprising part of cadastral survey plot No. 284, is likely to be required within the aforesaid village of Lalmai Pahar.

This notification is made under the provisions of section 4 of Act I of 1894, to all whom it may concern.

A plan of the land may be inspected in the office of the Subdivisional Officer, Sadar (South), Tippera, Comilla.

In exercise of the powers conferred by the aforesaid section, the Governor in Council is pleased to authorise the officers for the time being engaged in the undertaking, with their servants and workmen, to enter upon and survey the land and do all other acts required or permitted by that section.

Any person interested in the above land, who has any objection to the acquisition thereof, may, within thirty days after the date on which public notice of the substance of this notification is given in the locality, file an objection in writing before the Collector of Tippera.

Burdwan.—No. 9150L.A.—27th July 1931.—Whereas it appears to the Governor in Council that land is likely to be required to be taken by Government at the public expense for a public purpose, viz., for constructing Distributary No. 1B, Branch Canal, 1st and 2nd miles, up to chainage 10,000 feet, Damodar Canal Project, in the villages of Galsi and Kalyanpur or Bahirkhanya, jurisdiction list Nos. 139 and 144, respectively, thana Galsi, pargana Bagha, district Burdwan, it is hereby notified that for the above purpose a piece of land measuring, more or less, 8·31 acres, commencing at chainage 0 foot which is the central point of the Distributary No. 1, Branch Canal, at chainage 13,879 feet of that distributary and proceeding generally towards north through mauzas Galsi and Kalyanpur or Bahirkhanya up to chainage 1,653 feet, and then again running towards the north-east through the same mauzas up to chainage 7,140 feet and again towards the east through mauza Kalyanpur or Bahirkhanya, terminating at chainage 10,000 feet, varying in width from 35 feet to 110 feet and being 9,962 feet 6 inches in length, is likely to be required within the aforesaid villages of Galsi and Kalyanpur or Bahirkhanya.

This notification is made, under the provisions of section 4, of Act I of 1894, to all whom it may concern.

A plan of the land may be inspected in the office of the Special Land Acquisition Officer, Burdwan, as well as in that of the Executive Engineer, Damodar Canal Division, Burdwan.

In exercise of the powers conferred by the aforesaid section, the Governor in Council is pleased to authorise the officers for the time being engaged in the undertaking, with their servants and workmen, to enter upon and survey the land and do all other acts required or permitted by that section.

In exercise of the powers conferred by section 17 (4) of the Land Acquisition Act, I of 1894, as amended by Act XXXVIII of 1923, the Governor in Council is pleased to direct that the provisions of section 5A of the Act shall not apply in this case.

Tippera.—No. 9153L.A.—27th July 1931.—Whereas it appears to the Governor in Council that land is likely to be required to be taken by Government at the expense of the Comilla Municipality for a public purpose, viz., for waterworks and methars' quarters of the Comilla Municipality in the village of Bazrapur, pargana Meharkul, zilla Tippera, it is hereby notified that for the above purpose a piece of land measuring, more or less, 0·229 of an acre, comprising Comilla municipal town survey plots No. 310 of sheet No. 19 in Block "A" and Nos. 406 and 407 of sheet No. 20 in Block "B", is likely to be required within the aforesaid village of Bazrapur.

This notification is made, under the provisions of section 4 of Act I of 1894, to all whom it may concern.

A plan of the land may be inspected in the office of the Subdivisional Officer, Sadar (South), Comilla, in the district of Tippera.

In exercise of the powers conferred by the aforesaid section, the Governor in Council is pleased to authorise the officers for the time being engaged in the undertaking, with their servants and workmen, to enter upon and survey the land and do all other acts required or permitted by that section.

Any person interested in the above land, who has any objection to the acquisition thereof, may, within thirty days after the date on which public notice of the substance of this notification is given in the locality, file an objection in writing before the Collector of Tippera.

Tippera.—No. 9156L.A.—27th July 1931.—Whereas it appears to the Governor in Council that land is likely to be required to be taken by Government at the public expense for a public purpose, viz., for widening the Chittagong Trunk Road, in the villages of Saha Daulatpur (jurisdiction list No. 93, police-station Kotwali, pargana Gangamandal) and Chandina (jurisdiction list No. 236, police-station Chandina, pargana Patikara), zilla Tippera, it is hereby notified that for the above purpose four pieces of land altogether measuring, more or less, 0·29 of an acre, comprising (1) part of cadastral survey plot No. 1000, in village Saha Daulatpur, (2) parts of cadastral survey plots Nos. 263, 262, 261 and 260, (3) part of cadastral survey plot No. 203, and (4) part of cadastral survey plot No. 79 in mauza Chandina, are likely to be required within the aforesaid villages of Saha Daulatpur and Chandina.

This notification is made, under the provisions of section 4 of Act I of 1894, to all whom it may concern.

A plan of the land may be inspected in the office of the Subdivisional Officer, Sadar (South), Comilla, in the district of Tippera.

In exercise of the powers conferred by the aforesaid section, the Governor in Council is pleased to authorise the officers for the time being engaged in the undertaking, with their servants and workmen, to enter upon and survey the land and do all other acts required or permitted by that section.

Any person interested in the above land, who has any objection to the acquisition thereof, may, within thirty days after the date on which public notice of the substance of this notification is given in the locality, file an objection in writing before the Collector of Tippera.

Dacca.—No. 9162L.A.—27th July 1931.—Whereas it appears to the Governor in Council that land is likely to be required to be taken by Government partly at the public expense and partly at the expense of the authorities of the Ribar Girls' School, for a public purpose, viz., for a Girls' Primary School at Ribar, in the village of Ribar, pargana Makimabad, zilla Dacca, it is hereby notified that for the above purpose a piece of land measuring, more or less, 0·57 of an acre,

comprising cadastral survey plots Nos. 40 and 41, is likely to be required within the aforesaid village of Ribar.

This notification is made, under the provisions of section 4, of Act I of 1894, to all whom it may concern.

A plan of the land may be inspected in the office of the Subdivisional Officer, Naraingani.

In exercise of the powers conferred by the aforesaid section, the Governor in Council is pleased to authorise the officers for the time being engaged in the undertaking, with their servants and workmen, to enter upon and survey the land and do all other acts required or permitted by that section.

Any person interested in the above land, who has any objection to the acquisition thereof, may, within thirty days after the date on which public notice of the substance of this notification is given in the locality, file an objection in writing before the Collector of Dacca.

24-Parganas.—No. 9168L.A. — 27th July 1931.—Whereas it appears to the Governor in Council that land is likely to be required to be taken by Government at the public expense for a public purpose, viz., for future up-passenger line in connection with Calcutta Chord Railway Project, in the village of Belghoria, jurisdiction list No. 3, thana Baranagar, pargana Calcutta, district 24-Parganas, it is hereby notified that for the above purpose a piece of land measuring, more or less, 1·0236 acres bounded on the—

North—By the land of East Indian Railway acquired under declaration No. 695L.A., dated 15th January 1926, and of Biswanath Kholay,

East—By the land of East Indian Railway acquired under declaration No. 695L.A., dated 15th January 1926, and of Subodh Kholay,

South—By the lands of Atul Chatterji, Bepin Behari Banerjee, Khetra Ghose, Subodh Kholay, Amullya Ghose, Jadu Banerji, Kailash Saturi and land of East Indian Railway acquired under declaration No. 695L.A., dated 15th January 1926,

West—By the lands of Atul Chatterji, Bepin Behari Banerjee, Khetra Ghose, Subodh Kholay, Amullya Ghose, Jadu Banerji, Kailash Saturi and Biswanath Kholay,

is likely to be required within the aforesaid village of Belghoria.

This notification is made, under the provisions of section 4, of Act I of 1894, to all whom it may concern.

A plan of the land may be inspected in the office of the Engineer-in-Chief, Calcutta Chord Railway, at Dakhineswar.

In exercise of the powers conferred by the aforesaid section, the Governor in Council is pleased to authorise the officers for the time being engaged in the undertaking, with their servants and workmen, to enter upon and survey the land and do all other acts reqruired or permitted by that section.

Any person interested in the above land, who has any objection to the acquisition thereof, may, within thirty days after the date on which public notice of the substance of this notification is given in the locality, file an objection in writing before the Collector of 24-Parganas.

Hooghly.—No. 9171L.A —27th July 1931. —Whereas it appears to the Governor in Council that additional land is likely to be required to be taken by Government at the public expense for a public purpose, viz., for raised platform up and down passing siding, etc., in connection with Calcutta Chord Railway, in the villages of Mrigala and Monoharpur, jurisdiction list Nos. 104 and 106, thana Chanditala, pargana Boro, district Hooghly, it is hereby notified that for the above purpose a piece of land measuring, more or less, 9·90 acres, bounded on the—

North—By the lands of Sagore Banduri, Kebal Ghose, Mathore Ghose, Makhan Ghose, Chanchala Dasi, Sagore Chandra Banduri, Kebal Dhoobey, Lakhan Chandra Banduri, Ram Chandra Banduri and Kristo Banduri, Fakir Banduri, Elahi Mondal, Uma Charan Dhoobey, Harish Sen Gupta, Ejahar Mallick, Ektar Ali Mondal, Hiru Shaik and Trailokho Ghose,

East—By the lands of Makhan Ghose, Sagore Ghose, Chanchala Dasi, Sagore Chandra Banduri, Kebal Dhoobey, Lakhan Chandra Banduri, Ram Chandra Banduri, Kristo Banduri, Fakir Banduri, Harish Sen Gupta, Ejahar Mallick, Ektar Ali Mondal, Hiru Shaik, Elahi Mondal, Abdul Shaik and Birresswar Ghose,

South—By the East Indian Railway land and land of Abdul Shaik, Hiru Shaik and Birresswar Ghose,

West—By the lands of Sagore Banduri, Kebal Ghose, Mathore Ghose and East Indian Railway land,

is likely to be required within the aforesaid villages of Mrigala and Monoharpur.

This notification is made, under the provisions of section 4 of Act I of 1894, to all whom it may concern.

A plan of the land may be inspected in the office of the Engineer-in-Chief, Calcutta Chord Railway.

In exercise of the powers conferred by the aforesaid section, the Governor in Council is pleased to authorise the officers for the time being engaged in the undertaking, with their servants and workmen, to enter upon and survey the land and do all other acts required or permitted by that section.

Any person interested in the above land, who has any objection to the acquisition thereof, may, within thirty days after the date on which public notice of the substance of this notification is given in the locality, file an objection in writing before the Collector of Hooghly.

Chittagong.—No. 9174L.A. — 27th July 1931.—Whereas it appears to the Governor in Council that land is likely to be required to be taken by Government at the public expense for a public purpose, viz., for the construction of a forest inspection bungalow and range office, in the village of Padua, thana Satkania, zilla Chittagong, it is hereby notified that for the above purpose a piece of land measuring, more or less, 0·94 of an acre, covering revenue survey plots Nos. 3982, 3984, 3991 and 3992, is likely to be required within the aforesaid village of Padua.

This notification is made, under the provisions of section 4 of Act I of 1894, to all whom it may concern.

In exercise of the powers conferred by the aforesaid section, the Governor in Council is pleased to authorise the officers for the time being engaged in the undertaking, with their servants and workmen, to enter upon and survey the land and do all other acts required or permitted by that section.

Any person interested in the above land, who has any objection to the acquisition thereof, may, within thirty days after the date on which public notice of the substance of this notification is given in the locality, file an objection in writing before the Collector of Chittagong.

Tippera.—No. 9090L.A.—24th July 1931.—Maulvi Ali Reza, Sadar (North) Subdivisional Officer, Tippera, is vested with the powers of a Collector under Land Acquisition Act, I of 1894, in that subdivision.

Birbhum.—No. 9092L.A.—31st July 1931.—Babu Srimanta Kumar Das Gupta, M.B.E., Sadar Subdivisional Officer, Birbhum, is vested with the powers of a Collector under Land Acquisition Act, I of 1894, in that subdivision.

Howrah.—No. 9450L.A.—1st August 1931.—The Governor in Council is pleased to cancel so much of the notification No. 10312L.A., dated 25th August 1930, under section 4 of the Land Acquisition Act, I of 1894, published at pages 1371-1372, Part I of the *Calcutta Gazette* of the 28th idem, as relates to the acquisition of 0·0077 of an acre of land bounded as described below, which was required by the East Indian Railway for the diversion of Grand Trunk Road in connection with the Calcutta Chord Railway Project in the village of Bally, pargana Boro, district Howrah:—

Boundaries.

North—By the land acquired under declaration No. 6827L.A., dated 29th April 1929,

East and South—By Chaitalpara Road, and

West—By the land acquired under declaration No. 6827L.A., dated 29th April 1929, and by Chaitalpara Road.

Malda.—No. 9456L.A.—1st August 1931.—The Governor in Council is pleased to cancel the notification No 12134L.A., dated the 17th October 1930, under section 4 of the Land Acquisition Act, I of 1894, published at page 1688, Part I of the *Calcutta Gazette* of the 30th idem, in respect of the proposed acquisition of 0·52 of an acre of land required by the Nawabganj Municipality for the construction of staff quarters attached to the Nawabganj Charitable Dispensary, in the village of Char Jote Pratap, pargana Chandlai, district Malda.

Birbhum.—No. 9462L.A.—1st August 1931.—Whereas it appears to the Governor in Council that land is likely to be required to be taken by Government at the public expense for a public purpose, viz., for the Distributary No. 5 of the Bakreswar Canal in the villages of Bonsanka, Keola, Shirshita, Palashi, Babupur and Bodpur, jurisdiction list Nos. 146, 163, 162, 151, 155 and 154, thana Suri, parganas Alinogore and Jainujal, district Birbhum, it is hereby notified that for the above purpose a piece of land comprising portions of cadastral plots Nos. 3024, 3023, 3029, 3022, 3030, 3031 and 3019 of village Bonsanka, portions of plots Nos. 71, 69, 72, 70, 68, 96, 98, 94, 66 and 67 of village Keola, portions of plots Nos. 56, 57, 58, 59, 60, 63, 64, 67, 68, 70, 71, 98, 99, 379, 319, 317, 316, 315, 304, 303, 302, 301, 299, 297, 300, 298, 294, 295, 271, 637, 1263, 1284, 1285, 1288, 1289, 1290, 1291, 1307, 1308, 1309, 1311, 1317, 1316, 1164, 1377, 1378, 1380, 1379, 1512, 1514, 1506, 1505, 1503, 1502, 1551, 1553, 1554, 1555, 1556, 1496, 1495, 1494, 1493, 2924, 2918, 2920, 2921, 2919, 2912 and 2951 of village Shirshita, portions of plots Nos. 45, 47, 44, 43, 40, 41, 38, 37 and 35 of village Palashi, portions of plots Nos. 216, 217, 215, 224, 225, 246, 245, 247, 248, 249, 259, 260, 258 and 257 of village Babupur, portions of plots Nos. 24, 23, 22, 26, 27, 28, 33, 31, 32 and entire plot No. 75 of village Bodpur, measuring, more or less, 17·413 acres, is likely to be required within the aforesaid villages of Bonsanka, Keola, Shirshita, Palashi, Babupur and Bodpur.

This notification is made, under the provisions of section 4 of Act I of 1894, to all whom it may concern.

A plan of the land may be inspected in the office of the Collector of Birbhum.

In exercise of the powers conferred by the aforesaid section, the Governor in Council is pleased to authorise the officers for the time being engaged in the undertaking, with their servants and workmen, to enter upon and survey the land and do all other acts required or permitted by that section

Any person interested in so much of the above land as are not waste or arable, who has any objection to the acquisition thereof, may, within thirty days after the date on which public notice of the substance of this notification is given in the locality, file an objection in writing before the Collector of Birbhum.

In exercise of the powers conferred by section 17 (*4*) of the Land Acquisition Act, I of 1894, as amended by Act XXXVIII of 1923, the Governor in Council is pleased to direct that the provisions of section 5A of the Act shall not apply to the waste or arable portions of the land in this case.

Calcutta.—No. 9504L.A.—3rd August 1931.—Whereas it appears to the Governor in Council that land is likely to be required to be taken by Government at the expense of the Calcutta Improvement Trust for a public purpose, viz., for Alignment No. XII (Ballygunge Main Road) in Ward No. XXVII of the Calcutta Municipality in the city of Calcutta, it is hereby notified that for the above purpose a piece of land, being a portion

of premises No. 48, Gariahat Road, measuring, more or less, 0·6776 of an acre, and bounded on the—

North—By a portion of premises No. 49, Gariahat Road already acquired by the Calcutta Improvement Trust under declaration No. 5070L.A., dated the 29th May 1924,

East—By Gariahat Road,

South—By premises No. 48/1, Gariahat Road,

West—By the remaining portion of premises No. 48, Gariahat Road,

is likely to be required within the aforesaid Ward No. XXVII of the Calcutta Municipality in the city of Calcutta.

This notification is made, under the provisions of section 4, of Act I of 1894, to all whom it may concern.

A plan of the land may be inspected in the office of the First Land Acquisition Collector, at 5, Bankshall Street, Calcutta.

In exercise of the powers conferred by the aforesaid section, the Governor in Council is pleased to authorise the officers for the time being engaged in the undertaking, with their servants and workmen, to enter upon and survey the land and do all other acts required or permitted by that section.

Any person interested in the above land, who has any objection to the acquisition thereof, may, within thirty days after the date on which public notice of the substance of this notification is given in the locality, file an objection in writing before the First Land Acquisition Collector, at 5, Bankshall Street, Calcutta.

Calcutta.—No. 9507L.A.—3rd August 1931.—Whereas it appears to the Governor in Council that land is likely to be required to be taken by Government at the expense of the Calcutta Improvement Trust for a public purpose, viz., for Alignment No. IX (Central Avenue, Shambazar Street to Gallif Street) in Ward No. I of the Calcutta Municipality, in the city of Calcutta, it is hereby notified that for the above purpose a piece of land, being premises No. 127, Shambazar Street, and measuring, more or less, 4 cottahs and 15 chitaks of standard measurement equivalent to 0·0816 of an acre, bounded on the—

North—By Gobardhan Das Lane and premises No. 1, Gobardhan Das Lane,

East—By premises No. 126, Shambazar Street,

South—By Shambazar Street and a sewered ditch,

West—By Gobardhan Das Lane,

is likely to be required within the aforesaid Ward No. I of the Calcutta Municipality.

This notification is made, under the provisions of section 4, of Act I of 1894, to all whom it may concern.

A plan of the land may be inspected in the office of the First Land Acquisition Collector, at No. 5, Bankshall Street, Calcutta.

In exercise of the powers conferred by the aforesaid section, the Governor in Council is pleased to authorise the officers for the time being engaged in the undertaking, with their servants and workmen, to enter upon and survey the land and do all other acts required or permitted by that section.

Any person interested in the above land, who has any objection to the acquisition thereof, may, within thirty days after the date on which public notice of the substance of this notification is given in the locality, file an objection in writing before the First Land Acquisition Collector, at No. 5, Bankshall Street, Calcutta.

Calcutta.—No. 9510 L.A.—3rd August 1931.—Whereas it appears to the Governor in Council that land is likely to be required to be taken by Government at the expense of the Calcutta Improvement Trust, for a public purpose, viz., for street scheme known as Scheme No. XXXIII (Southern Avenue—1st Section) in Ward No. XXVII of the Calcutta Municipality in the city of Calcutta, it is hereby notified that for the above purpose a piece of land measuring, more or less, 385 bighas 5 cottahs equivalent to 127·3554 acres, bounded on the—

North—By the land acquired for the Calcutta Improvement Trust in Scheme No. XV-B under declaration No. 9827L.A., dated the 16th November 1920.

East—By premises No. 5, Monoharpukur 3rd Lane, premises No. 26, Lake Road, Lake Road, premises Nos. 100 and 99, Lake Road, Calcutta Improvement Trust land acquired under declaration No. 12231 L.A., dated the 14th December 1915, Calcutta Improvement Trust land purchased from the Eastern Bengal Railway,

South—By the Eastern Bengal Railway line,

West—By the land acquired for the Calcutta Improvement Trust for Scheme No. IV-A unuder declaration No. 1939 L.A., dated the 2nd December 1916,

excluding all public roads, streets, lanes and drain and also the lands acquired for the Calcutta Improvement Trust under declarations Nos. 1048 L.A., dated the 26th January 1925, 3611 L.A., dated the 7th March 1927, 16839 L.A., dated the 15th September 1928, and 7203 L.A., dated the 6th May 1929, and one temple in premises No. 36 (old No. 36/1), Mudiali Road,

is likely to be required within the aforesaid Ward No. XXVII of the Calcutta Municipality.

This notification is made, under the provisions of section 4, of Act I of 1894, to all whom it may concern.

A plan of the land may be inspected in the office of the First Land Acquisition Collector, at 5, Bankshall Street, Calcutta.

In exercise of the powers conferred by the aforesaid section, the Governor in Council is pleased to authorise the officers for the time being engaged in the undertaking, with their servants and workmen, to enter upon and survey the land and do all other acts required or permitted by that section.

Any person interested in the above land, who has any objection to the acquisition thereof, may, within thirty days after the date on which public notice of the substance of this notification is given in the locality, file an objection in writing before the First Land Acquisition Collector, Calcutta.

ERRATA.

No. 9147L.A.—27th July 1931.—For the names of villages, areas to be acquired and names of parganas in the notification No. 10000L.A., dated the 22nd May 1928, under section 4 of the Land Acquisition Act, I of 1894 for 772·613 acres of land published at pages 1182-83, Part I of the *Calcutta Gazette* of the 31st idem as amended by cancellation notifications No. 12043L.A., and 12044L.A., dated the 14th September 1929, published at page 1767, Part I of the *Calcutta Gazette* of the 19th idem; No. 8582-L.A., dated the 21st July 1930, published at pages 1124-25, Part I of the *Calcutta Gazette* of the 24th idem; Nos. 12050L.A., and 12051L.A., dated the 17th October 1930, published at page 1684, Part I of the *Calcutta Gazette* of the 30th idem and Nos. 9291L.A., and 9321L.A., dated the 19th January 1931, published at page 91, Part I of the *Calcutta Gazette* of the 22nd idem in respect of the proposed acquisition of land required for the construction of a broad gauge railway from Madhukhali to Bhatiapara with a branch line from Madhukhali to Kamarkhali, read as follows:—

Name of villages.	Name of parganas.	Area in acres.
Kalimajhi ..	Naldi ..	0·956
Banamalipur ..	Do. ..	14·643
Binnahuri ..	Do. ..	5·290
Narail ..	Do. ..	2·517
Biswanathpur ..	Satair and Naldi ..	4·938
Byaspur ..	Do. ..	35·188
Kagdi ..	Naldi ..	6·414
Darbasta ..	Do. ..	5·736
Bagjhapa ..	Satair and Naldi ..	11·840
Khanerhat ..	Naldi, Satair, Tolihati and Gangapath ..	10·831
Pona ..	Naldi ..	15·475
Kasiani ..	Do. ..	20·940
Pingalia ..	Do. ..	7·443
Barasur ..	Satair and Naldi ..	6·788
	Total ..	157·999

and also *substitute* the word "Kalukhali" for the words "Madhukhali (miles 20-21)" and "(mile 46-46·97)" for "(miles 47-47·02)" in line 4 and "(mile 26B-26·44B)" for "(mile 26-26·48B)" in line 5 and *add* "in miles 38 to 46 of the alignment" between the words "Faridpur" and "it" in line 6, of the notification.

Burdwan.—No. 9178L.A.—27th July 1931.—In the notification No. 11617L.A., dated the 23rd September 1930, under section 4 of the Land Acquisition Act, published at page 1569, Part I of the *Calcutta Gazette* of the 2nd October 1930 in respect of the proposed acquisition of 47·05 acres of land required for assisted sidings to Messrs. Martin & Company's Samla Nos. 1, 2 and 3 colliery sidings at mile 128¾ on the Ondal Sainthia Chord Branch of the East Indian Railway, in the villages of Baidyanathpur, etc., pargana Shergarh, district Burdwan, *for* the figure "1753" *read* "2545" in line 18; *insert* the word "Kendra-Khottadi" *after* the word "Dalurband" in line 21; *for* the figure "13,784 feet 4 inches" *read* "14,762 feet 6 inches" in line 22; *for* the words "south-west" *substitute* the words "the west" in line 23; *substitute* the words "18,302 feet in mauza Kendra-Khottadi" *for* the words "17,510 feet in mauza Ramnagar" in line 24; *for* the words "13,784 feet 4 inches and 13,757 feet 10 inches" *read* "300 feet west from the theoretical point at 14,486 feet and 220 feet east from the theoretical point at 14,076 feet 7 inches" in lines 26 and 27; *insert* the words "mauzas Kendra-Khottadi and" *before* the words "mauza Ramnagar" in line 30; and *for* the figure "19885" *read* "19,995" in line 32.

DECLARATIONS.

Burdwan.—No. 9159L.A.—27th July 1931.—Whereas it appears to the Governor in Council that land is required to be taken by Government at the public expense for a public purpose, viz., for constructing 3rd and 4th mile (up to chainage 16,000 feet) of Distributary No. 6/C, Main Canal, in connection with the Damodar Canal Project, in the villages of Chandutia, Ekdelpur and Sukur, jurisdiction list Nos. 66, 159 and 157, respectively, in thana Burdwan, pargana Shahabad, district Burdwan, it is hereby declared that for the above purpose a piece of land measuring, more or less, 2·85 acres, commencing at chainage 10,560 feet (2nd mile) in mauza Chandutia, and running generally towards east through mauzas Ekdelpur and Sukur, terminating at chainage 16,000 feet in mauza Sukur, varying in width from 15 feet to 90 feet and being 5,440 feet in length, is required within the aforesaid villages of Chandutia, Ekdelpur and Sukur.

This declaration is made, under the provisions of section 6, Act I of 1894, to all whom it may concern.

A plan of the land may be inspected in the office of the Special Land Acquisition Deputy Collector, Burdwan, as well as in that of the Executive Engineer, Damodar Canal Division, Burdwan.

No. 9165L.A.—27th July 1931.—Whereas it appears to the Governor in Council that land is required to be taken by Government at the public expense for a public purpose, viz., for the construction of a broad gauge railway from Kalukhali to Bhatiapara (mile 46-46·97) with a branch line from Madhukhali (mile 20-21B) to Kamarkhali (mile 26B-26·44B) within the villages and parganas mentioned below, in the district of Faridpur, in miles 38 to 46 of the alignment, it is hereby declared that for the above purpose plots of land of varying widths, altogether measuring, more or less, 157·999 acres, is required within

the undermentioned villages and parganas in the district of Faridpur: —

Name of villages.	Name of parganas	Area in acres.
Kalinagha ..	Naldi ..	9·956
Banamalipur ..	Do. ..	14 643
Binnahuri ..	Do. ..	5·290
Narail ..	Do. ..	2·517
Biswanathpur ..	Satair and Naldi ..	4·938
Bynapur ..	Do ..	35·188
Kagdi ..	Naldi ..	6·414
Darbasta ..	Do. ..	5·736
Bagjhapa ..	Satair and Naldi ..	11·840
Khanerhat ..	Naldi, Satair, Tehhati and Gangapath ..	10·831
Pona ..	Naldi ..	15·475
Kasiani ..	Do. ..	20 940
Pangalia ..	Do. ..	7·443
Barasur ..	Satair and Naldi ..	6·788
	Total ..	157·999

This declaration is made, under the provisions of section 6, Act I of 1894, to all whom it may concern.

Plans of the land may be inspected in the office of the Special Land Acquisition Officer, Faridpur, as well as in that of the Chief Engineer, Constructions, Eastern Bengal Railway, at No. 3, Koilaghat Street, Calcutta.

Burdwan.—No. 9177L.A.—27th July 1931. —Whereas it appears to the Governor in Council that land is required to be taken by Government at the public expense for a public purpose, viz., for assisted sidings to Messrs. Martin & Company's Samla Nos. 1, 2 and 3 colliery sidings at mile 128¾ on the Ondal Sainthia Chord Branch of the East Indian Railway, in the villages of Baidyanathpur, Dalurband, Ramnagar and Kendra-Khottadi, jurisdiction list Nos. 5, 4, 3 and 1, respectively, in thana Ondal, pargana Shergarh, district Burdwan, it is hereby declared that for the above purpose a piece of land measuring, more or less, 46·86 acres, containing 3 private sidings, viz., the Samla Siding No. 1 commencing from the western boundary of the East Indian Railway at chainage 2,545 feet and running generally in the north-western direction through mauzas Baidyanathpur, Dalurband, Ramnagar and Kendra-Khottadi up to chainage 14,762 feet 6 inches, then running towards the west and terminating at chainage 18,302 feet in mauza Kendra-Khottadi; and sidings Nos. 2 and 3 commencing from the Samla Siding No. 1 at chainage 300 feet west from the theoretical point at 14,486 feet and chainage 220 feet east from the theoretical point at 14,076 feet 7 inches, respectively and proceeding generally towards the north and terminating at chainage 2,383 feet and 2,375 feet, respectively, in mauzas Kendra-Khottadi and Ramnagar, respectively, and varying in width from 100 feet to 160 feet and being 19·995 feet in length, is required within the aforesaid villages of Baidyanathpur, Dalurband, Ramnagar and Kendra-Khottadi.

Mines of coal, iron-stone, slate or other minerals lying under the land or any particular portion of the land, except only such parts of the mines and minerals as it may be necessary to dig, or carry away, or use, in the construction of the work for the purpose of which the land is being acquired are not needed.

This declaration is made, under the provisions of section 6, Act I of 1894, and section 3, clause (*f*), Act XVIII of 1885, to all whom it may concern.

A plan of the land may be inspected in the office of the Special Land Acquisition Officer, Burdwan, as well as in that of the Superintendent, Way and Works, Asansol, East Indian Railway.

24-Parganas.—No. 9459 L.A.—1st August 1931.—Whereas it appears to the Governor in Council that land is required to be taken by Government at the expense of the Baranagar Municipality for a public purpose, viz., for opening out a road from Baralpara Lane to municipal bye-lane in the village of Baranagar, jurisdiction list No. 5, thana Baranagar, pargana Calcutta, district 24-Parganas, it is hereby declared that for the above purpose two pieces of land altogether, measuring, more or less, 0·0874 of an acre, bounded on the—

Plot A:

North—By the municipal drain and Baralpara Lane,

East—By municipal drain,

South—By the lands of Jatindra Nath Dey and Krishna Mohon Dey and by municipal drain,

West—By Baralpara Lane and by the land of Jatindra Nath Dey and Krishna Mohon Dey,

Plot B:

North—By the lands of Purna Ch. Bhaduri, Nripendra Nath Chakravarty and Gnanendra Nath Dey and by municipal drain,

East—By the municipal bye-lane and by the land of Nripendra Nath Chakravarty and Gnanendra Nath Dey,

South—By the land of Gnanendra Nath Dey, Nripendra Nath Chakravarty and Satish Ch. Sannyal and others,

West—By the lands of Gnanendra Nath Dey, Nripendra Nath Chakravarty and Satish Ch. Sannyal and others and by the municipal drain,

are required within the aforesaid village of Baranagar.

This declaration is made, under the provisions of section 6, Act I of 1894, to all whom it may concern.

A plan of the land may be inspected in the office of the Chairman, Baranagar Municipality, as well as in that of the Land Acquisition Officer, Alipore.

Rangpur.—No. 9468L.A.—1st August 1931. —Whereas it appears to the Governor in Council that land is required to be taken by Government at the public expense for a public purpose, viz., for staff quarters in connection with the ghat shifting at Fulchari in the village of Ratanpur, jurisdiction list No. 414,

thana Fulchari, pargana Patiladaha, district Rangpur, it is hereby declared that for the above purpose two pieces of land altogether measuring, more or less, 3·025 acres bounded on the—

Block A:

North—By the lands of Lal Chand Barman,

East—By the lands of Jagat Chandra and Sarat Chandra Barman, Basir Shek, Atabulla Bepari and Dip Chand Barman,

South—By the lands of Jagat Chandra and Sarat Chandra Barman,

West—By the lands of Eastern Bengal Railway,

Block B:

North—By the lands of Nala Ram Barman,

East—By the lands of Eastern Bengal Railway,

South—By the lands of Pancha Das, Joyenuddin Shek and primary school compound,

West—By the lands of Joyenuddin Shek, Farazuddin Shek, Ratan Sonar, Nala Ram Barman and Ratan Sonar,

are required within the aforesaid village of Ratanpur.

This declaration is made under the provisions of section 6, Act I of 1894, to all whom it may concern.

A plan of the land may be inspected in the office of the Collector of Rangpur.

Mymensingh.—No. 9513L.A.—3rd August 1931.—Whereas it appears to the Governor in Council that land is required to be taken by Government at the public expense for a public purpose, viz., for shifting ramp line of the Eastern Bengal Railway at Bahadurabad (Farithana), in the village of Dakatipara, jurisdiction list No. 33 in thana Dewanganj, pargana Patiladaha, district Mymensingh, it is hereby declared that for the above purpose a piece of land comprising cadastral plots Nos. 1197, 1137, 1126, 1124, 1120, 1119 and 1116 of Dakatiapara and measuring, more or less, 0·642 of an acre, is required within the aforesaid village of Dakatiapara.

This declaration is made, under the provisions of section 6, Act I of 1894, to all whom it may concern.

A plan of the land may be inspected in the office of the Collector of Mymensingh.

ERRATA.

Calcutta.—No. 9453L.A.—1st August 1931.—In lines 11 and 12 of declaration No. 10816-L.A., dated the 1st September 1930, published at page 1401, Part I of the *Calcutta Gazette* of the 4th idem, in respect of the acquisition of land required by the Calcutta Improvement Trust for Alignment No. II (Tangra Main Road) in Ward No. XIX of the Calcutta Municipality in the city of Calcutta, *read* "0·0505 of an acre" *in place of* "0·0541 of an acre."

Calcutta.—No. 9465L.A.—1st August 1931.—In line 20 of the declaration No. 7856L.A., dated the 22nd June 1931, under section 6 of the Land Acquisition Act, I of 1894, published at page 750, Part I of the *Calcutta Gazette* of the 25th idem, in respect of the proposed acquisition of 0·0792 of an acre required by the Calcutta Improvement Trust *for* "Alignment No. IX (Central Avenue, Shambazar Street to Gallif Street)", *read* "Durga Charan Mukherjee Street, and" after the word "and."

Forests.

NOTIFICATION.

No. 9140For.—27th July 1931.—The following notification of the Government of India, Department of Education, Health and Lands, is republished for general information:—

No. 940-F., dated Simla, the 9th July, 1931.

Notification—By the Government of India, Department of Education, Health and Lands.

Consequent on the grant of leave to Mr. E. O. Shebbeare, Conservator of Forests, Northern Circle, Bengal, Mr. A. K. Glasson, Deputy Conservator of Forests in that Presidency, is appointed to officiate as Conservator of Forests, with effect from the forenoon of the 22nd June 1931, until further orders.

Excluded Area.

NOTIFICATION.

Chittagong Hill Tracts.—No. 9143E.A.—27th July 1931.—In exercise of the power conferred by section 18 of the Chittagong Hill Tracts Regulation, 1900 (Regulation I of 1900), the Governor in Council is pleased to make the following amendment in the rules for the administration of the Chittagong Hill Tracts framed under notification No. 123-P.D., dated the 1st May 1900, and published in the *Calcutta Gazette* of the 2nd May 1900 as subsequently amended:—

For rule 28 the following rule shall be *substituted*, namely:—

28. The Registering Officer shall maintain in the forms prescribed in the Bengal Registration Manual the following Registers:—

(1) Receipt Book.
(2) Register of thumb impression.
(3) Fee book.
(4) Cash book.
(5) Registry book.

Reasons for refusing registration will be noted in the Fee book.

H. C. V. PHILPOT,
Secy. to the Govt. of Bengal.

IRRIGATION DEPARTMENT.

Irrigation.

NOTIFICATION.

No. 161.—17th July 1931.—The following draft of amendments, which, in exercise of the powers conferred by sections 6 and 11 of the Canals Act, 1864 (Bengal Act V of 1864), the Governor in Council intends to make, in the rules and schedule of rates of tolls for the Rampur Bil Khal joining the Gazipur Khal at Gazipur and Chechri on the north and Amua Done at Amua on the south in the district of Bakarganj (published in Bengal Government notification No. 131., dated the 7th April 1931, at pages 450-51, Part I of the *Calcutta Gazette* of the 16th idem), is hereby published for the information of persons likely to be affected thereby.

2. The draft will be taken into consideration on or after the 10th September 1931, and any objections or suggestions received by the undersigned before that date will be considered:—

Draft amendments.

Schedule of rates of tolls.

Insert the words "and Chechri" after the words "at Amua" at the end of the last line of rule 12 of the said rules.

H. C. V. PHILPOT,

Secy. to the Govt. of Bengal.

LEGISLATIVE DEPARTMENT.

NOTIFICATION.

No. 2308L.—27th July, 1931.—In modification of notification No. 2330L., dated the 10th August, 1929, as subsequently amended by notifications Nos. 1138L., dated the 3rd April, 1930, and 1971L., dated the 14th August, 1930, and in pursuance of the provisions of rule 33 of the Bengal Legislative Council Rules, the following three members have been elected by the non-official members of the Bengal Legislative Council, namely:—

(1) Khan Bahadur Maulvi Alimuzzaman Chaudhuri,

(2) Mr. Narendra Kumar Basu,

(3) Mr. Mukunda Behary Mullick

in the vacancies caused by the retirement of two members and resignation of his seat in the Bengal Legislative Council by another.

J. BARTLEY,

Secy. to the Bengal Legis. Council.

CUSTOM HOUSE, CALCUTTA.

NOTIFICATION.

No. 2846.—29th July 1931.—In exercise of the powers conferred by section 137 of the Sea Customs Act as subsequently amended, the Collector of Customs is pleased to make the following amendment to his notification No. 2874 of 28th July 1927 relating to the shipment of goods before presentation of a shipping bill:—

Insert the following after the first sentence in clause 7 as amended:—

"He should also declare thereon that he has sufficient funds to his credit in his account to cover duty and/or cess on the shipment."

M. SLADE,

Collector of Customs (offg.).

TREASURY NOTICES.

Orders by the Deputy Accountant-General, Bengal.

The Treasury, 27th July 1931.

It is notified that the refund order book No. 499 containing 50 orders is in use by the Income Tax Officer, Central Salaries Circle, Calcutta, with effect from 20th July 1931.

The Treasury, 28th July 1931.

It is notified that the refund order book No. 72 containing No. 1 to 50 (both inclusive) is in use by the Income Tax Officer, Railway and Miscellaneous Salaries Circle, Calcutta, with effect from 22nd July 1931. The colour of the voucher "Pink."

K. R. RAMA AYYAR,

Dy. Accountant-General, Bengal.

HIGH COURT NOTICES.

Original Side.

Calcutta, the 24th July 1931.

Mr. S. N. Roy, Assistant Master and Referee, High Court, Original Side, having died on the 20th July 1931, the Hon'ble the Chief Justice has been pleased to appoint Mr. J. M. Ghose, Assistant Registrar on Rs. 400-600, as Assistant Master and Referee in place of Mr. S. N. Roy (deceased), with effect from the 21st July 1931.

In supersession of the notification, dated the 8th July 1931, published in Part II, page 841 of the *Gazette of India*, dated 11th July 1931, the Hon'ble the Chief Justice has been pleased to make the following acting appointments with effect from the 21st July 1931 up to and inclusive of the 10th September 1931:—

(*a*) Mr. D. Basu, Barrister-at-Law, *vice* Mr. J. M. Ghose, Assistant Registrar on Rs. 400-600 (promoted).

(*b*) Mr. Sachindra Nath Banerji (Assistant Registrar on Rs. 300), *vice* Mr. F. Palsett, Assistant Registrar on Rs. 400-600 (on leave).

Mr. O. U. Ahamed, Barrister-at-Law, *vice* Mr. S. N. Banerji.

The 27th July 1931.

It is ordered that the following be substituted for rule 70 of Chapter XXXVI of the Rules of the High Court, 1914 (3rd edition, 1930), with effect from 17th August 1931:—

70. Any party who may be dissatisfied with the allowance or disallowance by the Taxing Officer in any bill of costs taxed by him, of the whole or any part of the items, may, not more than three days after the passing of the bill in the Taxing Office, or within such further time as the Taxing Officer may allow, lodge objections to the taxation, and on the same day shall serve the opposite party or parties with a copy thereof. The objections shall be in writing, specifying therein by a list, in a short and concise form, the items or parts thereof objected to, and the grounds and reasons for such objections. Such objections shall be heard by the Taxing Officer at a time to be fixed by him of which notice in writing to the parties concerned shall issue from the Taxing Office. The Taxing Officer may, where he shall think fit, issue, pending the consideration of such objections, a preliminary allocatur for or on account of the remainder of the bill of costs, and such further allocatur as may be necessary shall be issued by the Taxing Officer after his decision upon such objections.

By order of the Full Court,

MAURICE REMFRY, *Registrar.*

Civil.

The 27th July 1931.

No. 9837A.—Babu Rajendra Lal Chakrabatti, Munsif and Registrar, Court of Small Causes of Munshiganj, in the district of Dacca, is vested with the powers of a Judge of a Court of Small Causes for the trial of suits cognizable by such a Court up to the value of Rs. 250 and Rs. 20 within the local limits of the Munshiganj Munsifi and Munshiganj Small Cause Court, respectively.

The 30th July 1931.

No. 10020A.—Babu Sharat Chandra Mukharji, munsif, under orders of transfer to Kishoreganj, in the district of Mymensingh, is vested with the powers of a Judge of a Court of Small Causes for the trial of suits cognizable by such a Court up to the value of Rs. 250 within the local limits of the Kishoreganj munsifi.

By order of the High Court,

W. McC. SHARPE, *Registrar.*

ORDERS BY COMMISSIONERS OF DIVISIONS.

Burdwan Division—Chinsura.

No. 1080M.—29th July 1931.—It is hereby notified for general information that the next general election of Commissioners of the Suri Municipality in the district of Birbhum will be held on Sunday, the 14th February 1932.

No. 2258J.G. — 30th July 1931. — In accordance with the provisions of rule 63 (2) of Chapter IV of the Bengal Jail Code, Volume I, I hereby appoint Babu Bhujanga Bhusan Sinha, M.B., Mrs Indumati Mukherjee and Khan Bahadur Maulvi Madeswar Hossain, Pleader, to be non-official visitors of the Rampurhat Subsidiary Jail in the district of Birbhum for a period of two years from the date of this notification.

No. 2285J.G.—31st July 1931.—Maulvi Abu Ahmad Faizal Mohi, Sub-Deputy Collector and Sub-Deputy Magistrate, Bankura, was allowed leave on average pay for eight days, under rule 81 (*b*) (*ii*) of the Fundamental Rules, with effect from the 25th May 1931.

This cancels this office notification No. 1847-J.G. of the 14th June 1931, granting him three days' leave from 30th May 1931.

L. B. BURROWS, *Commissioner (offg.).*

Burdwan, the 24th July 1931.

It is hereby notified for general information that, under section 13 of the Bengal Village Self-Government Act, 1919 (Bengal Act V of 1919), read with rule 36 of the rules for the election and appointment of members of union boards, etc., Babu Benoy Krishna Mukherjee has been duly elected to be a member for Ward No. 1 of the Jaugram union board in police-station Jamalpur in the district of Burdwan, *vice* Babu Provas Chandra Mozumdar, deceased.

S. P. GHOSH, for *District Magistrate.*

Suri, the 27th July 1931.

No. 6.—It is hereby notified for general information that, under section 13 of the Bengal Village Self-Government Act, 1919 (Bengal Act V of 1919), read with rule 36 of the rules for the election and appointment of members of union board, etc., Maulvi Obedar Rahaman has been appointed by me to be a member of the Rampurhat union board in police-station Rampurhat in the Rampurhat subdivision of the district of Birbhum, *vice* Babu Mani Mohan Ghose, resigned.

G. S. DUTT, *Dist. Magistrate, Birbhum.*

Chittagong Division—Chittagong.

No. 2798G.—24th July 1931.—It is hereby notified for general information that Maulvi Ali Haider Chaudhury, Honorary Magistrate, Feni, is appointed to be a non-official visitor of the Feni Sub-Jail in the district of Noakhali for a period of two years with effect from this date, *vice* Khan Sahib Maulvi Bazlul Haq, deceased.

W. H. NELSON, *Commissioner.*

Comilla, the 30th July 1931.

No. 4379M.—Under section 13 of the Bengal Village Self-Government Act, 1919, read with section 6, clause (3), and rule 36 of the rules for the election and appointment of members of union boards I appoint Maulvi Muhammad Yasin Patwari as a member of Deora union board, thana Chandina, district Tippera, *vice* Munshi Muzaffar Ali Mir, deceased.

C. G. B. STEVENS, *Dist. Magte., Tippera*

Dacca Division—Dacca.

No. 3811J.—25th July 1931.—It is hereby notified for general information, that at the by-election held on the 30th June 1931, the following gentlemen were duly elected to be Commissioners of the Bhola Municipality in the district of Bakarganj for the wards noted above their names:—

Ward No. II.

Babu Jogendra Coomar Mukherjee and Maulvi Nurul Huque, *vice* Babu Chuni Lal Sen Gupta and Babu Benode Behari De, resigned.

Ward No. III.

Haji Abdul Karim Howladar, *vice* Babu Bhuban Mohan Sarkar, resigned.

Ward No. IV.

Babu Ramesh Chandra Sen Poddar, *vice* Babu Dakshina Ranjan Banerjee, resigned.

No. 3856J.—27th July 1931.—It is hereby notified for general information that, under section 19 (*1*) of the Bengal Local Self-Government Act (III of 1885), Munshi Muhammad Esarat Ali Jotedar has been duly elected to be a member of the Goalundo local board for police-station Goalundo Ghat in the district of Faridpur, *vice* Babu Parbati Charan Chakravarty, resigned.

No. 3905J.—31st July 1931.—It is hereby notified for general information that, under rule 63 (*2*) of the Bengal Jail Code, 1919, the following gentlemen are appointed to be non-official visitors of the subsidiary jails in the district of Mymensingh as noted above their names for a period of two years, with effect from the 29th August 1931:—

Kishoreganj Sub-Jail.

Babu Prakash Chandra Nandi.

Netrokona Sub-Jail.

Babu Radha Nath Dutta.
Maulvi Fazlur Rub Mazumdar.

Jamalpur Sub-Jail.

Rai Sahib Akshoy Kumar Sen.
Khan Sahib Saydur Rahman.

Tangail Sub-Jail.

Maulvi Abdul Hamid Choudhury.
Babu Jogendra Chandra Chakraverty.

A. CASSELLS, *Commissioner (offg.).*

Dacca, the 24th July 1931.

No. 5471M. — It is hereby notified for general information that, under section 13 of the Bengal Village Self-Government Act, V of 1919, Munshi Jaliluddin Sirkar has been appointed to be a member of the Pubail union board, police-station Kaliganj in Sadar (North) subdivision of the district of Dacca, *vice* Dr. Elahi Bux, deceased.

R. M. CHAKRAVARTI,
Addl. District Magistrate.

Presidency Division—Calcutta.

No. 1291R.G.—30th July 1931.—This office notification No. 1209 R. G., dated the 20th July 1931, transferring Babu Promode Ranjan Das Gupta, Sub-Deputy Collector and Circle Officer, Narail, to Jhenidah, Jessore, as Circle Officer, is hereby cancelled.

No. 1285R.G.—31st July 1931.—This office notification No. 1214 R.G., dated the 20th July 1931, transferring Maulvi Enamul Kabir, Sub-Deputy Collector and Circle Officer, Jhenidah, to Narail, Jessore, as Circle Officer, is cancelled.

No. 1414M.—31st July 1931.—It is hereby notified for general information that the following gentlemen have been duly elected to be Commissioners of the Satkhira Municipality in the district of Khulna at the last general election of Commissioners held on the 18th June 1931:—

Ward No. I (Satkhira).

Babu Dwijendra Nath Banerjee.
Babu Surendra Nath Ganguli.

Ward No. II (Sultanpur).

Maulvi Mir Rajab Ali.

Ward No. III (Pranshire).

Babu Jatindra Nath Ray Choudhury.

Ward No. IV (Katia).

Babu Amulya Krishna Sarcar

Ward No. V (Polashpole).

Babu Tarapada Palit.

Ward No. VI (Bankal)

Babu Hem Chandra Das Gupta.

Ward No. VII (Kukrail).

Babu Kishori Lal Bose.

F. W. ROBERTSON, *Commissioner (offg.).*

Krishnagar, the 29th July 1931.

It is hereby notified for general information that, under section 13 of the Bengal Village Self-Government Act, 1919 (Bengal Act V of 1919), read with rule 36 of the rules for the election and appointment of members, etc., of union boards under the said Act, Babu Manindra Nath Chatterjee has been appointed by the District Magistrate of Nadia to be a member of the Sahapur-Boalia union board in the police-station Chuadanga in the Chuadanga subdivision of the district of Nadia, in place of Babu Bidhu Bhusan Mukherjee, deceased.

It is hereby notified for general information that, under section 13 of the Bengal Village Self-Government Act, 1919 (Bengal Act V of 1919), read with rule 36 of the rules for the election and appointment of members, etc., of union boards under the said Act, Babu Mukunda Mohan Bose has been duly elected to be a member of the Sahapur-Boalia union board in the police-station Chuadanga in the Chuadanga subdivision of the district of Nadia, in place of Babu Brahmo Mohan Bose, deceased.

P. C. ROY, *Dist. Magistrate, Nadia.*

Bengal Chamber of Commerce Constituency of the Bengal Legislative Council.

Calcutta, the 6th August 1931.

Notice is hereby given, under the provisions of No. 19 (*5*) of the Bengal Electoral Rules, that the return of election expenses and declaration made in respect thereof with regard to his candidature for election as a representative of the Bengal Chamber of Commerce Constituency of the Bengal Legislative Council was duly lodged with me by Mr. J. Mein Austin. The return and declaration may, on payment of a fee of one rupee, be inspected on application to me at my office between the hours of 11 a.m. and 4 p.m. for one week from date.

D. K. CUNNISON, *Returning Officer.*

Indian Tea Association Constituency of the Bengal Legislative Council.

Calcutta, the 6th August 1931.

Notice is hereby given, under the provisions of No. 19 (*5*) of the Bengal Electoral Rules, that the return of election expenses and the declaration made in respect thereof, in regard to his candidature for election as a representative of the Indian Tea Association Constituency of the Bengal Legislative Council, were duly lodged by Mr. Alexander Stormonth Macalister with me on the 31st July 1931. Such return and declaration may, on payment of a fee of one rupee, be inspected on application to me in my office between the hours of 11 a.m. and 4 p.m. for one week from this date.

D. K. CUNNISON, *Returning Officer.*

Rajshahi Division—Jalpaiguri.

No. 2754J. -29th July 1931.—Babu Gokul Singh Gahatraj, Sub-Deputy Collector, Darjeeling, is transferred to Dinajpur Sadar.

No. 2763J. -29th July 1931.—Babu Surendra Nath Banerjee, No. II, Sub-Deputy Collector, Kurigram, Rangpur, is allowed leave on average pay for six weeks, under rule 81 (*b*) (*ii*) of the Fundamental Rules, with effect from the 3rd September 1931, or any subsequent date on which he may be relieved.

No. 2767J.—29th July 1931.—Babu Anadi Nath Lahiri, Sub-Deputy Collector and Circle Officer, Nawabganj, Malda, is transferred to the Kurigram subdivision of the Rangpur district to work in the general line.

No. 2784J.—29th July 1931.—Maulvi Quazi Shafiuddin Ahmed, Sub-Deputy Collector and Circle Officer, Rajshahi Sadar, is appointed to work there in the general line.

No. 2788J.—29th July 1931.—Babu Kula Bhushan Datta, Sub-Deputy Collector, Rajshahi Sadar, is appointed to work there as Circle Officer.

No. 2792J.—29th July 1931.—Maulvi Mohammad Mohsin, Sub-Deputy Collector, Dinajpur, is transferred to the Thakurgaon subdivision of that district to work in the general line.

No. 2796J.—29th July 1931.—Maulvi Mohammad Abdus Sobhan, Sub-Deputy Collector and Circle Officer, Thakurgaon, Dinajpur, is posted to Malda to work in the general line.

No. 2801J.—29th July 1931.—Babu Jnanendra Nath Chakravarty, Sub-Deputy Collector and Circle Officer, Domar, Rangpur, is transferred to Dinajpur Sadar to work in the general line.

No. 2806J.—29th July 1931.—Babu Monoranjan Das Gupta, Sub-Deputy Collector, Bogra, is transferred to the Nilphamari subdivision of the Rangpur district to work as Circle Officer, Domar Circle.

No. 2811J.—29th July 1931.—Maulvi Khondkar Abdul Hannan, Sub-Deputy Collector, Rangpur Sadar, is transferred to Malda to work as Circle Officer, Nawabganj.

J. G. DRUMMOND, *Commissioner (offg.).*

Dinajpur, the 25th July 1931.

No. 4313J.—It is hereby notified for general information that, under section 13 of the Bengal Village Self-Government Act, 1919 (Bengal Act V of 1919), Maulvi Rahimuddin Pramanik of Jehanabad has been appointed to be a member of the Chandipur union board No. V in the police-station Parbatipur in the Sadar subdivision of the district of Dinajpur, *vice* Munshi Sarfarazuddin Choudhury of Chandipur, deceased.

L. C. GUHA, *District Magistrate.*

Pabna, the 25th July 1931.

It is hereby notified for general information that, under section 13 of the Bengal Village Self-Government Act, 1919 (Bengal Act V of 1919), Munshi Ashraf Uddin Sarker has been duly elected to be a member of the Majpara union board in police-station Atgharia within the Sadar subdivision of the Pabna district, *vice* Mahammad Idu Uddin Biswas, deceased.

It is hereby notified for general information that, under section 13 of the Bengal Village Self-Government Act, 1919 (Bengal Act V of 1919), Munshi Meherali Malitha has been duly appointed by the District Magistrate of Pabna to be a member of the Lakshmikunda union board in police-station Sara within the Sadar subdivision of the Pabna district, *vice* Babu Surendra Nath Pal, removed by the district board of Pabna.

It is hereby notified for general information that, under section 13 of the Bengal Village Self-Government Act, 1919 (Bengal Act V of 1919), Babu Sudhir Chandra Mazumder has been duly appointed by the District Magistrate of Pabna to be a member of the Lakshmikunda union board in police-station Sara within the Sadar subdivision of the Pabna district, *vice* Babu Ananta Bhusan Majumder, removed by the district board, Pabna.

S. BANERJEE, *District Magistrate.*

Rangpur, the 25th July 1931.

No. 4281J.—It is hereby notified for general information that, under sub-section (*3*) of section 6 of the Bengal Village Self-Government Act, 1919 (Bengal Act V of 1919), Babu Girija Prosad Nag has been appointed to be a member of Damodarpur union board in Sadullapur police-station of the Gaibandha subdivision of the Rangpur district, *vice* Babu Girish Chandra Chaudhury, deceased.

No. 4282J.—It is hereby notified for general information that under sub-section (*3*) of section 6 of the Bengal Village Self-Government Act, 1919 (Bengal Act V of 1919), Babu Narendra Chandra Choudhury has been appointed to be a member of Damodarpur union board in Sadullapur police-station of the Gaibandha subdivision of the Rangpur district, *vice* Babu Kanteswar Sarkar, resigned.

No. 4283J.—It is hereby notified for general information that, under section 13 of the Bengal Village Self-Government Act, 1919 (Bengal Act V of 1919), Munshi Mafiz Uddin Talukdar has been duly elected to be a member of Kamardaha union board in Govindaganj police-station of the Gaibandha subdivision of the Rangpur district, *vice* Munshi Alep Uddin, deceased.

No. 4284J.—It is hereby notified for general information that under section 13 of the Bengal Village Self-Government Act, 1919 (Bengal Act V of 1919), Munshi Mangia Sardar has been duly elected to be a member of Ramjiban union board in Sundarganj police-station of the Gaibandha subdivision of the Rangpur district, *vice* Munshi Tasar Uddin Sarkar, deceased.

Rangpur, the 30th July 1931.

No. 4385J.—It is hereby notified for general information that, under section 13 of the Bengal Village Self-Government Act, 1919 (Bengal Act V of 1919), Munshi Muhammad Abdul Gafur Prodhan *alias* Gamir Uddin Poidhan has been duly elected to be a member of Shibpur union board in police-station Govindaganj of the Gaibandha subdivision of the Rangpur district, *vice* Munshi Arjan Ali, resigned.

T. M. DOW, *District Magistrate.*

The Calcutta Gazette

THURSDAY, AUGUST 6, 1931.

Part I A

Orders and Notifications by the Government of India republished for general information.

FINANCE DEPARTMENT (CENTRAL REVENUES).

NOTIFICATION.

CUSTOMS.

Simla, the 25th July 1931.

No. 41.—In exercise of the powers conferred by Section 19 of the Sea Customs Act, 1878 (VIII of 1878), the Governor-General in Council is pleased to prohibit the bringing into British India of any copy of the book by Edward Holton James, entitled "I Tell Everything, The Brown Man's Burden," published by the Kundig Press, Geneva, Switzerland, or any translation, reprint or other document containing substantial reproductions of the matter contained in the said book.

G. S. HARDY,
Joint Secy. to the Govt. of India.

MARINE DEPARTMENT.

Simla, the 25th July 1931.

APPOINTMENTS.

No. 18.—The services of Lieutenant-Commander R. A. H. McConnell, Royal Indian Marine, are placed at the disposal of the Department of Commerce, for employment as officiating Nautical Surveyor, Mercantile Marine Department, Calcutta District, Calcutta, with effect from the 26th June 1931, *vice* Commander C. H. Corser, Royal Indian Marine, granted leave.

G. M. YOUNG,
Secy. to the Govt. of India.

DEPARTMENT OF COMMERCE.

NOTIFICATIONS.

INLAND NAVIGATION.

Simla, the 25th July 1931.

No. 351-M.I. (2)/30.—In exercise of the powers conferred by sub-section (*1*) of section 54A of the Inland Steam-Vessels Act, 1917 (I of 1917), the Governor-General in Council, after causing due inquiry to be made, is pleased, in respect of the stretch of inland waterway between Serajdikha and Dacca—

(*a*) to fix the following as the minimum rates per mile which may, for a period of one year commencing on the 1st August 1931, be charged for passenger fares for passengers of any class travelling on inland steam-vessels:—

Between Dacca and all stations up to and including Taltolla—4 pies per mile.

For through traffic between Dacca and Serajdikha—3·42 pies per mile.

(*b*) to declare that for the purpose of calculating passenger fares the distances hereinafter set forth shall be deemed to be the distances between the stations named:—

	Miles.
Serajdikha to Dacca ...	21
Serajdikha to Taltolla ...	6
Taltolla to Dacca ...	15
Taltolla to Jajira ...	5
Jajira to Fatulla ...	3
Fatulla to Dacca ...	7
Hariharpara to Dacca ..	7
Hariharpara to Jajira ...	3
Raipura to Dacca ...	15
Furshile to Dacca ...	15

MERCHANT SHIPPING.

The 25th July 1931.

No. 42-M.I. (7)/31.—In exercise of the power conferred by section 223 of the Indian Merchant Shipping Act, 1923 (XXI of 1923), and in supersession of all previous orders on the subject, the Governor-General in Council is pleased to fix the fees to be levied for survey for, and for the grant of, a certificate of approval of the position of any load-line disc or any alteration thereof, and for the issue of a duplicate copy of such certificate, in accordance with the following provisions, namely:—

1. Save as hereinafter provided the fees payable shall be determined in accordance with the following scales:—

(*a*) Gross tonnage of vessels.	Classed vessels.	Unclassed vessels.
	Rs.	Rs.
Under 100 tons	32	64
100 tons and under 300 tons	32	96
300 tons and under 500 tons	48	128
500 tons and under 1,000 tons	64	176
1,000 tons and under 1,500 tons	80	224
1,500 tons and under 2,000 tons	96	272
2,000 tons and under 2,500 tons	112	320
2,500 tons and under 3,000 tons	128	368
For every additional 1,000 tons up to 10,000 tons ..	16	48
For every additional 1,000 tons above 10,000 tons ..	*Nil*	48

Note.—An "unclassed" vessel for the purposes of the above scale is one that has not previously been "classed" with Lloyds Register, or Bureau Veritas, or the British Corporation or any other Association approved by the Governor General in Council.

	Rs.
(*b*) For vessels which have already been surveyed for the grant of passenger certificates, and for which no fresh survey is considered necessary ...	32
(*c*) For issue of a duplicate copy of a vessel's load-line certificate in the event of the original being lost ...	5

2. In addition to the fees payable under paragraph 1 there shall be payable along with an application for survey for a load-line certificate a fee of Rs. 60 in respect of every survey which is required by such application to be made on any of the following days, namely—

(*a*) Sunday.
(*b*) New Year's Day.
(*c*) Good Friday.
(*d*) The King Emperor's Birthday.
(*e*) Christmas Day.

3. The charge of overtime fees in respect of surveys or inspections for a load-line certificate wholly or partially carried out between the hours of 5 P.M. and 7 A.M. shall be regulated as follows:—

(*a*) where on the application of the owner or agent of the ship a Surveyor is called upon to undertake the survey or inspection of a vessel after 5 P.M. and before 7 A.M. an additional fee of Rs. 50 shall be charged;

(*b*) where a Surveyor is detained at the request of the owner or agent after 5 P.M. to complete a survey undertaken between the hours of 7 A.M. and 5 P.M., an additional fee of Rs. 25, if the Surveyor is released from duty before 6 P.M., and of Rs. 60, if he is detained later than 6 P.M., shall be charged;

(*c*) where the owner or agent has asked for survey between the hours of 7 A.M. and 5 P.M., but official arrangements have not allowed of the work being done between those hours no additional fee shall be chargeable;

(*d*) where a Surveyor has been called upon as specified in clause (*a*) or detained as specified in clause (*b*), the owner or agent shall give information of the fact in writing to the Principal Officer or to the Principal Engineer and Ship Surveyor of the port stating the hours during which the Surveyor was in attendance.

PORTS.

The 25th July 1931.

No. 206-P. & L. (13)/31.—In exercise of the power conferred by section 5 of the Chittagong Port Act, 1914 (Bengal Act V of 1914), the Governor-General in Council is pleased to declare that the limits of the port of Chittagong shall be as follows:—

To the north-east.—A line drawn across the river Karnafuli on a bearing 114° 45′ from a masonry pillar, which is situated on the right bank of the river in the village Mauhara at Kalurghat, to a pillar situated on the left bank of the river in the village Sandaria at Kadurkhil.

To the south-west.—From the boundary pillar which is situated north 60° west (true) at a distance of 1¼ miles from Patunga beacon a line drawn south 15° east (true) to a point which lies south 38° west (true) at a distance of 1-1/10 miles from the Norman's Point Lighthouse.

To the south.—A line drawn west (true) from the boundary pillar to the point where it meets the south-western boundary line as defined above.

These limits include so much of the river Karnafuli and the shore thereof as lie within fifty yards of high water mark at ordinary spring tides.

No. 206-P. & L. (13)/31.—In exercise of the power conferred by section 5 of the Chittagong Port Act, 1914 (Bengal Act V of 1914), the Governor-General in Council is pleased to direct that the following alteration shall be made in the limits of the port of Chittagong as defined in the notification of the Government of Bengal, No. 88-Marine, dated the 16th August 1923, namely:—

Alteration.

The portion of the Karnafuli Bridge lying on the North East shall be withdrawn from the limits of the port of Chittagong.

RESOLUTION.

INLAND NAVIGATION.

Simla, the 25th July 1931.

No. 351-M.I. (2)/30.—On a representation received from the Pioneer Motor Boat Company, Dacca, stating that the India General Navigation and Railway Company, Limited, and the Rivers Steam Navigation Company, Limited, had reduced the passenger fares on the run between Serajdikha and Dacca and intermediate stations to such an extent as to disclose an intention to force the Pioneer Motor Boat Company to cease from carrying passengers, and asking that action should be taken under section 54-A. of the Inland Steam-vessels Act, 1917, as amended by Act XIII of 1930, the Government of India decided to hold an enquiry into the matter. The enquiry was entrusted to a Committee constituted as follows:—

President.

Sir Narasimha Sarma, K.C.S.I., (President of the Railway Rates Advisory Committee).

Members.

Mr. A. W. Parsons (Member of the Railway Rates Advisory Committee).

Mr. A. Cassells, C.I.E., I.C.S., Commissioner, Dacca Division.

2. The terms of reference to the Committee were as follows:—

1. To report whether on the run between Serajdikha and Dacca and intermediate stations the rates of passenger fares charged on the inland steam-vessels belonging to the India General Navigation and Railway Company, Limited, and the Rivers Steam Navigation Company, Limited, have been reduced to such an extent as to disclose an intention to force the Pioneer Motor Boat Company of Dacca to cease from carrying such passengers.

2. If such an intention is disclosed, to report:—

(*a*) the minimum rates per mile which should be charged for passenger fares for passengers of all classes travelling on inland steam vessels on the run between Serajdikha and Dacca and intermediate stations;

(*b*) what shall be deemed to be the distance between the stations of Serajdikha and Dacca and intermediate stations for the purpose of calculating passengers' fares between the said stations?

3. The findings and recommendations of the Committee on the various points referred to them are:—

1. That the intention of the Joint Inland Steamer Companies to force the Pioneer Motor Boat Company, Dacca, to cease from carrying passengers on the run in question has been disclosed.

2. (*a*) That the minimum rate per mile should be 4 pies as between Dacca and all stations up to and including Taltolla, and that the fare for through traffic between Dacca and Serajdikha should be 6 annas, which is on the basis of 3½ pies per mile. In the interests of the travelling public the above minimum rates should remain in force for one year only, or until on complaint a new minimum rate can be fixed after enquiry.

(*b*) That the distance between Serajdikha and Dacca is 21 miles and the distances between the other stations are:—

	Miles.
Serajdikha to Taltolla ...	6
Taltolla to Dacca ...	15
Taltolla to Jajira ...	5
Jajira to Fatulla ...	3
Fatulla to Dacca ...	7
Hariharpara to Dacca ...	7
Hariharpara to Jajira ...	3
Raipura to Dacca ...	15
Furshile to Dacca .	15

4. The Report of the Committee has been published to-day and copies are available for sale to the general public.

5. The Government of India accept the findings and recommendations of the Committee and have taken the necessary steps to promulgate their orders by notification in the *Gazette of India*.

Order.—Ordered that a copy of the above Resolution (together with a copy of the Report) be communicated to the Government of Bengal, the Railway Department, the Director General of Commercial Intelligence and Statistics, the High Commissioner for India, and the Secretary, Railway Rates Advisory Committee.

Ordered also that the Resolution be published in the *Gazette of India*.

( ) Not to the Secretary, Railway Rates Advisory Committee.

A. RAISMAN,

Joint Secy. to the Govt. of India (offg.).

ARMY DEPARTMENT.

Simla, the 20th June 1931.

Part A.

No. 377.—The following promotions are made, subject to His Majesty's approval:—

* * * *

ARMY IN INDIA RESERVE OF OFFICERS.

Lts. to be Capts.

P. C. Banerjee, Medical. Dated 20th Jan. 1931.

* * * *

Simla, the 25th July 1931.

Part B.

No. 460.—The following *press communiqué* is published for general information:—

"The next examination for entry to the King's commissioned ranks of the Army, the Royal Air Force and the Royal Indian Marine will be held in Delhi on the 17th November 1931 and succeeding days. The examination will last for about ten days.

2. The following vacancies will be offered to successful Indian and Anglo-Indian candidates who attain the necessary qualifying marks:—

Army—

Sandhurst (for Infantry and Cavalry)	...	10
Woolwich (for Engineers, Artillery and Signals)	...	3

Royal Air Force—

Cranwell (for Royal Air Force)	...	3

Royal Indian Marine—

Executive Branch, at least	...	1
Engineer Branch, at least	...	1

3. Army and Royal Air Force candidates must have attained the age of 18 and must not have attained the age of 20 on the 1st January 1932. Candidates for the Royal Indian Marine must have attained the age of 17½ and must not have attained the age of 19½ on the 1st November 1931.

4. Copies of the form of application for permission to appear at the examinations should be obtained by prospective Army and Royal Air Force candidates direct from the Secretary to the Government of India, Army Department, Simla. Prospective candidates for the Royal Indian Marine should use the copies of the form of application contained in the 'Regulations respecting the recruitment, training, rates of pay, etc., etc., of commissioned officers of the Royal Indian Marine' referred to in paragraph 7 below.

5. If an individual is a candidate for the Royal Indian Marine and is also a candidate for admission to the Royal Military Academy, Woolwich, the Royal Military College, Sandhurst, or the Royal Air Force College, Cranwell, he should specify his order of preference on each application form.

6. The closing date for the receipt of applications will be the *15th August 1931*. Under no circumstances whatsoever will any application received after that date receive consideration.

Candidates who sat for the June 1931 Army entrance examination and who, in the event of failure to pass, wish to appear at the November 1931 examination, must, provided they are still within the age limit, submit their applications before the closing date mentioned above. Should they be declared successful at the former examination, their applications to sit at the November 1931 examination will be cancelled.

7. The subjects of the examinations and further detailed information are contained in the pamphlets entitled 'Provisional regulations respecting the admission of Indian gentlemen to the Royal Military Academy, Woolwich, the Royal Military College, Sandhurst and the Royal Air Force College, Cranwell, 1928' and 'Regulations respecting the recruitment, training, rates of pay, etc., etc., of commissioned officers of the Royal Indian Marine' respectively, which together with the amendments thereto should be obtained on payment direct from the Manager, Government of India, Central Publication Branch, 3, Government Place, West, Calcutta."

G. M. YOUNG,

Secy. to the Govt. of India.

Passed with distinction.

(In alphabetical order.)

	Abdul Gafur Miah	..	Barisal Brajomohan College.
	Abdul Jabber	..	Non-collegiate student (City College)
	Acharyya, Gajendra Amritlal	..	St. Xavier's College
	Asanuddin Ahmed	..	Gauhati Cotton College
	Bagchi, Prabhatkumar	..	Rangpur Carmichael College.
	,, Ranjitkumar	..	Non-collegiate student (Rajshahi College).
	Bandyopadhyay, Bibhutibhushan		Scottish Church College.
	,, Bimodlal	..	Barisal Brajomohan College
	,, Debipada	..	Daulatpur Hindu Academy.
10	,, Kanailal	..	Rangpur Carmichael College.
	,, Rabindranath	..	St. Xavier's College.
	,, Sibkrishna	..	Hughli College
	,, Sisirkumar	..	Bhowanipur Asutosh College.
	,, Sukumar	..	Bangabasi College.
	Basu, Bidhanjyoti	..	Bankura Wesleyan College.
	,, Kantibhushan	..	Berhampur Krishnath College.
	,, Santikumar	..	St Xavier's College.
	Bharali, Purnachandra	..	Gauhati Cotton College
	Bhattacharyya, Amulyakumar	..	Sylhet M C. College.
20	,, Bhupatibhushan	..	Hughli College.
	,, Hrishikes	..	Non-collegiate student (Rajshahi College).
	,, Kalinarayan	..	Berhampur Krishnath College
	,, Kshetradhan		Scottish Church College
	,, Manindrachandra		Non-collegiate student (Daulatpur Hindu Academy)
	Bhaumik, Praphullakumar	..	Non-collegiate student (Cooch Behar Victoria College).
	Bhawal, Siteschandra	..	Berhampur Krishnath College
	Biswas, Jyotirmay	..	Scottish Church College
	Chakrabarti, Dineschandra	..	Non-collegiate student (Rajshahi College)
	,, Jyotirmay	..	St. Xavier's College.
30	,, Sailendramohan	..	Non-collegiate student (Rajshahi College).
	,, Sailendranath	.	Presidency College.
	Chattopadhyay, Dhirendranath	..	Bankura Wesleyan College
	,, Gadadhar	..	Bangabasi College.
	,, Narendranath	.	Non-collegiate student (Daulatpur Hindu Academy).
	,, Tarapada	..	Presidency College.
	Chaudhuri, Amiyakanta	..	Non-collegiate student (City College).
	,, Asitranjan	..	Bankura Wesleyan College
	,, Durgakumar	..	Scottish Church College
	,, Purnendukumar	..	Sylhet M C. College.
40	Das, Kisorimohan	..	Bhowanipur Asutosh College.
	,, Krishnakumar	..	Scottish Church College
	,, Nabanidhar	..	Bankura Wesleyan College
	,, Nalinranjan	..	Scottish Church College
	,, Nibaranchandra	..	Bankura Wesleyan College.
	,, Subodhchandra	..	Gauhati Cotton College.
	,, Upendrachandra	..	Presidency College
	Dasgupta, Bijaykumar	..	Bangabasi College
	D'Costa, John P	..	St. Xavier's College.
	De, Birendranath	..	Scottish Church College
50	,, Pramodkumar	.	Vidyasagar College.
	,, Satindranath	..	Chittagong College.
	Deoram Akshay Parmar	..	Bankura Wesleyan College.
	Dorab F. Modi	..	St Xavier's College
	Gangopadhyay, Bankimchandra	..	Barisal Brajomohan College.
	,, Prabinchandra	..	Berhampur Krishnath College.
	Ghosh, Abanibhushan	.	Daulatpur Hindu Academy.
	,, Debabrata	..	Vidyasagar College.
	,, Praphullakumar	..	Scottish Church College
	,, Pushkarkumar	..	Vidyasagar College.
60	,, Sibdas	..	Hughli College.
	Guhamajumdar, Sukumar	..	Ripon College.
	Gummaluri Abbayi	..	Bankura Wesleyan College
	Gupta, Bimodbihari	..	Berhampur Krishnath College.
	Howladar, Amiyaranjan	..	Bankura Wesleyan College
	K. Rajagopalan	..	Non-collegiate student (Scottish Church College).
	Kar, Santoshkumar	..	Scottish Church College.
	Khan, Bhubaneswar	..	Bankura Wesleyan College.
	Kouwen, Austen M.	..	St Xavier's College.
	Kujur, Paulus	..	Ditto.
70	Kundu, Nagendranath	..	Rangpur Carmichael College
	Majumdar, Asokratan	..	Barisal Brajomohan College.
	,, Nareschandra	..	Scottish Church College
	,, Nilratan	..	Berhampur Krishnath College
	,, Praphullagobinda	..	Rangpur Carmichael College.
	Mandal, Basudeb	..	Scottish Church College.
	Maulik, Nripendramohan	..	Rangpur Carmichael College.
	Md. Afsar Ali Mandal	..	Chittagong College
	Md. Ghyasuddin Miah	..	Pabna Edward College.
	Mitra, Phanibhushan	..	Scottish Church College.
80	,, Prithwisundar	..	St Xavier's College.
	,, Sudhiskumar	..	Bhowanipur Asutosh College.
	Mukhopadhyay, Kanailal	..	City College.
	,, Mrityunjay	..	Berhampur Krishnath College.
	,, Nilkanta	..	Rangpur Carmichael College.
84	,, Paresnath	..	Barisal Brajomohan College.
	,, Tanuprasanna	..	Ripon College.
	,,		

	Nandi, Sudhirchandra	..	Chittagong College.
	Nasiruddin Sarkar	..	Non-collegiate student (Rangpur Carmichael College).
	Niyogi, Santoskumar	..	Bankura Wesleyan College.
90	Pal, Kamalkrishna	..	Scottish Church College.
	,, Nripendranath	..	Ditto.
	,, Sannyaschandra	..	St. Xavier's College.
	Poddar, Rajmohan	..	Presidency College.
	Pramanik, Kalidas	..	Scottish Church College.
	Ray, Anilkumar	..	Berhampur Krishnath College.
	,, Bishnupada	..	Scottish Church College.
	,, Dhiresnarayan	..	St. Xavier's College.
	,, Hiranmay	..	Bangabasi College.
	,, Kamalaprasad	..	Midnapore College.
100	,, Khagendrakumar	..	Non-collegiate student (Rajshahi College).
	,, Natendrakrishna	..	Chittagong College.
	Raychaudhuri, Charukanta	..	Barisal Brajomohan College.
	,, Santimay	..	Berhampur Krishnath College.
	Raynean, Robert	..	St. Xavier's College.
	Sadhu, Indubhushan	..	Hughli College.
	Saha, Suryyakumar	..	Berhampur Krishnath College.
	Samaddar, Prasantakumar	..	City College.
	Sanyal, Lakshmiram	..	Non-collegiate student (Bethune College).
	Sarkar, Ramkinkar	..	Scottish Church College.
110	Sarma, Kamaleswar	..	Gauhati Cotton College.
	,, Pranadananda	..	Ditto.
	Sen, Praphullakumar	..	Non-collegiate student (Vidyasagar College).
	,, Sukomalchandra	..	Non-collegiate student (Rajshahi College).
	,, Susilkumar	..	Rangpur Carmichael College.
	Sengupta, Brajmohan	..	Barisal Brajomohan College.
	,, Kalipada	..	Scottish Church College.
	Shah Abdul Majid	..	Non-collegiate student (Rajshahi College).
	Sinhamahapatra, Madhusudan	..	Bankura Wesleyan College.
	Sinharay, Birendranarayan	..	Non-collegiate student (Vidyasagar College).
120	Syed Firoz Ali	..	Non-collegiate student (City College).
121	Talapatra, Nareschandra	..	Barisal Brajomohan College.

Pass list.

(In alphabetical order.)

	Abdul Mojid Mesh	..	Presidency College.
	Adhikari, Phanindranath	..	Non-collegiate student (Rajshahi College).
	,, Sasankasekhar	..	Midnapore College,
	Alauddin Ahmed	..	Presidency College.
	A. R. Najmuddin Husain	..	Ditto.
	Azharuddin Ahmed	..	Gauhati Cotton College.
	Bagchi, Pradyotkumar	..	Bangabasi College.
	Baksi, Sudhirranjan	..	City College.
	Bal, Sureschandra	..	Rangpur Carmichael College.
10	Bandyopadhya, Ajitkumar (II)	..	Bangabasi College.
	,, Ajitkumar	..	St. Xavier's College.
	,, Akinchanpran	..	Bangabasi College.
	,, Anileswar	..	Barisal Brajomohan College.
	,, Brajendranath	..	Non-collegiate student (Bangabasi College).
	,, Harinarayan	..	St. Xavier's College.
	,, Kusumohan	..	Bangabasi College.
	,, Prabhatkumar	..	St. Xavier's College.
	,, Sarojkumar	..	Barisal Brajomohan College.
	,, Sibsankar	..	Berhampur Krishnath College.
20	,, Subimalendu	..	Bangabasi College.
	,, Sudhirkumar	..	Vidyasagar College.
	,, Siddheswarchandra	..	Bangabasi College.
	,, Swarupananda	..	Non-Collegiate student (Ripon College).
	Banik, Nagendrachandra	..	Barisal Brajomohan College.
	Barat, Ramranjan	..	Non-collegiate student (Bangabasi College).
	Bardolai, Hemkanta	..	Gauhati Cotton College.
	Basak, Kamalchand	..	Presidency College.
	Basu, Ajaykumar	..	City College.
	,, Anantakumar	..	Presidency College.
30	,, Arun	..	City College.
	,, Asoknath	..	Non-collegiate student (Scottish Church College).
	,, Birendranath	..	Barisal Brajomohan College.
	,, Haribhushan	..	Daulatpur Hindu Academy.
	,, Jitendrakumar	..	Rangpur Carmichael College.
	,, Kshirodlal	..	Non-collegiate student (Rangpur Carmichael College).
	,, Nirmalchandra	..	Vidyasagar College.
	,, Pulinbihari	..	Presidency College.
	,, Sailendrakumar	..	City College.
	,, Sailendranath	..	Non-collegiate student (Presidency College).
40	,, Santoshkumar	..	Ripon College.
	,, Susantakumar	..	City College.
	Bhattacharyya, Banamali	..	Berhampur Krishnath College.
	,, Dharendranath	..	Bhowanipur Asutosh College.
	,, Dhirendrakumar		Sylhet M. C. College.
	,, Dhirendrakumar	..	Non-collegiate student (Ripon College).
	,, Pramatharanjan	..	Non-collegiate student (Vidyasagar College).

	Bhattacharyya,	Sudhindranath ..	City College.
	,,	Susilkumar ..	Non-collegiate student (Barisal Brajomohan College).
	Bhaumik,	Arabindanath ..	Rajshahi College.
50	Bhuiyan,	Debendranath ..	Gauhati Cotton College.
	Biswas,	Anilkumar	Midnapore College.
	,,	Bimalkanti	Bankura Wesleyan College.
	,,	Jyotischandra	Daulatpur Hindu Academy.
	,,	Nitaichand	Scottish Church College.
	Bora,	Jnanananda	Gauhati Cotton College.
	Brenner,	E. E.	St. Xavier's College.
	Chakrabarti,	Banarilal ..	Barisal Brajomohan College.
	,,	Bhabaranjan ..	City College.
	,,	Bibhutibhushan ..	Vidyasagar College.
60	,,	Jatindramohan ..	Barisal Brajomohan College.
	,,	Pareschandra ..	Non-collegiate student (Rajshahi College).
	,,	Prantoshkumar ..	Bankura Wesleyan College.
	,,	Purnachandra ..	Presidency College.
	,,	Rabindranath ..	Non-collegiate student (Vidyasagar College).
	,,	Sailendrakrishna ..	Non-collegiate student (Ripon College).
	Chandra,	Sailendranath ..	Non-collegiate student (Vidyasagar College).
	Chattopadhyay,	Ajitkumar ..	St. Xavier's College.
	,,	Anilkumar ..	Bangabasi College.
	,,	Asitbaran ..	Bankura Wesleyan College.
70	,,	Brajendranath ..	Krishnagar College.
	,,	Chandidas ..	St. Xavier's College.
	,,	Hrishikesh ..	Hughli College
	,,	Jatischandra ..	Scottish Church College.
	,,	Kalidas ..	St. Xavier's College.
	,,	Kamakhyacharan	Gauhati Cotton College.
	,,	Muktipada ..	Bankura Wesleyan College.
	,,	Niradbaran ..	Berhampur Krishnath College.
	,,	Pannalal ..	Vidyasagar College.
	,,	Prabhaskumar ..	Ripon College.
80	,,	Praphullakumar(II)	Non-collegiate student (Barisal Brajomohan College).
	,,	Sambhunarayan ..	Ripon College.
	,,	Sanjib ..	Non-collegiate student (Presidency College).
	,,	Sarbeswar ..	Non-collegiate student (Bangabasi College).
	,,	Subodhkumar ..	Non-collegiate student (Bhowanipur Asutosh College).
	,,	Sudhirendra ..	St. Xavier's College.
	,,	Sudhirkumar ..	Chittagong College.
	Chaudhuri,	Amiyabhushan ..	Barisal Brajomohan College.
	,,	Anilkumar ..	Berhampur Krishnath College.
	,,	Bijaygopal ..	Rajshahi College.
90	,,	Binaykanta ..	Rangpur Carmichael College.
	,,	Jitendranath ..	Non-collegiate student (Rajshahi College).
	,,	Nareschandra ..	Presidency College.
	,,	Pradyotkumar ..	Non-collegiate student (City College).
	,,	Prabhatchandra ..	Non-collegiate student (Rajshahi College).
	,,	Rai Sachindranath ..	Presidency College.
	,,	Saktipada	Non-collegiate student (Sylhet M. C. College).
	,,	Susimohan ..	Gauhati Cotton College.
	,,	Sudhirchandra ..	Bangabasi College.
	,,	Sukhendubimal ..	Chittagong College.
100	,,	Susilchandra ..	Vidyasagar College.
	,,	Susilchandra ..	Non-collegiate student (Rajshahi College).
	Das,	Atindralal	City College.
	,,	Basantalal	Bangabasi College.
	,,	Chakrapani	Presidency College.
	,,	Dhirendranath	Barisal Brajomohan College.
	,,	Dhirendranath	Non-collegiate student (Vidyasagar College).
	,,	Goposchandra	Sylhet M. C. College.
	,,	Nagendranath	Barisal Brajomohan College.
	,,	Prabhatchandra	Ditto.
110	,,	Suryyakanta	Non-collegiate student (Roll Cal. N. 85).
	Dasgupta,	Amiyakumar ..	St. Xavier's College.
	,,	Amiyanath ..	Non-collegiate student (Vidyasagar College).
	,,	Parimal	Cooch-Behar Victoria College.
	,,	Ramanimohan ..	Barisal Brajomohan College.
	,,	Susilchandra ..	Non-collegiate student (Rangpur Carmichael College).
	,,	Udaychandra ..	Bangabasi College.
	Dasmitra,	Debikumar	Berhampur Krishnath College.
	Datta,	Baradakumar	Ditto.
	,,	Bimalkumar	Scottish Church College.
120	,,	Dhirajmohan	Sylhet M. C. College.
	,,	Indusekhar	Non-collegiate student (Bankura Wesleyan College).
	,,	Nripendranath	St. Xavier's College.
	,,	Paresnath	Hughli College.
	,,	Rabindranath	Presidency College.
	,,	Sadananda	Non-collegiate student (Presidency College).
	,,	Suhasini	Scottish Church College.
	Dattaray,	Saileschandra ..	Berhampur Krishnath College.
	David,	David Hay	St. Xavier's College.

	De, Anilkumar	..	Bankura Wesleyan College.
130	,, Chandrakanta	..	Daulatpur Hindu Academy.
	,, Debhari	..	Non-collegiate student (Scottish Church College).
	,, Harendranath	..	City College.
	,, Pramathabandhu	..	Rangpur Carmichael College.
	,, Sibchand	..	St Xavier's College.
	,, Sushilkumar	..	Vidyasagar College.
	Deb, Upendramohan	..	Non-collegiate student (Bangabasi College)
	Debgupta, Dineschandra	..	Non-collegiate student (Rajshahi College)
	Desarkar, Sukumar	..	Non-collegiate student (St. Xavier's College).
	Dobey, Bibhutibhushan	..	Non-collegiate student (Daulatpur Hindu Academy).
140	Gangopadhyay, Bhabaniprasad	..	Krishnagar College.
	,, Kshitilal	..	Non-collegiate student (Barisal Brajomohan College).
	,, Labanyakumar	..	Bangabasi College.
	,, Narayanchandra	..	Presidency College.
	,, Sudhirchandra	..	Rangpur Carmichael College.
	Ghosh, Ajitkumar	..	Presidency College.
	,, Anadimohan	..	Ditto.
	,, Arabinda	..	City College.
	,, Arbindakumar	..	Ditto.
	,, Bhabaniprasad	..	St. Xavier's College
150	,, Bhupendramohan	..	Vidyasagar College
	,, Bimalkumar	..	Bhowanipur Asutosh College
	,, Chandramohan	..	Chittagong College
	,, Hiranmay	..	Scottish Church College.
	,, Jnanranjan	..	Bhowanipur Asutosh College.
	,, Kisorimohan	..	Ditto.
	,, Manimay	..	Scottish Church College.
	,, Nirendrakisor	..	Presidency College
	,, Pramodkumar	..	Non-collegiate student (Roll Cal. N. 87).
	,, Ramchandra	..	Hughli College.
160	,, Ranendranath	..	Bankura Wesleyan College.
	,, Sankarnath	..	Presidency College.
	,, Subodhkumar		City College.
	Gogaihajarika, Benudhar	..	Gauhati Cotton College.
	Gohain, Amritalal	..	Ditto.
	Guha, Jyotsnakumar	..	St. Xavier's College.
	,, Makhanlal	..	City College.
	Gupta, Amalendu	..	Rangpur Carmichael College.
	,, Amarendranath	..	Presidency College.
	,, Kiranchandra	..	Non-collegiate student (Ripon College).
170	,, Krishnaprasad	..	St Xavier's College.
	,, Makhanlal	..	Sylhet M. C. College.
	,, Mohitchandra	..	Gauhati Cotton College.
	,, Saranan	..	Scottish Church College.
	Joardar, Sachinandan	..	Non-collegiate student (Rajshahi College).
	Kar, Sasankamohan	..	Hughli College.
	,, Sureschandra	..	Sylhet M. C. College.
	Kargupta, Sucharu	..	Ditto.
	Khan, Manojkusum	..	Bangabasi College.
	,, Purnendunarayan	..	Ditto
180	Kharsatic, Kolohda	..	Scottish Church College.
	Khastgir, Shorasimohan	..	Chittagong College.
	Kundu, Sailendranath	..	St. Xavier's College.
	Lahiri, Hemendrakumar	..	Vidyasagar College.
	,, Pranajitchandra	..	Scottish Church College.
	,, Praphullakumar	..	Non-collegiate student (Rajshahi College).
	,, Prasaddas	..	City College.
	,, Priyanath	..	Non-collegiate student (Rajshahi College).
	,, Sailendranath	..	Barisal Brajomohan College.
	M N. Subrahmaniam	..	St. Xavier's College.
190	M Zahirul Hasan	..	Non-collegiate student (Presidency College)
	Mahalanabis, Sujitkumar	..	Presidency College.
	Mahiruddin Ahmed	..	Rangpur Carmichael College
	Maiti, Bijaykumar	..	Non-collegiate student (Midnapur College).
	Maitra, Manindramohan	..	Presidency College.
	,, Nirmalchandra	..	Cooch-Behar Victoria College.
	,, Satidas	..	Scottish Church College.
	,, Subodhchandra	..	Non-collegiate student (Bangabasi College).
	Majedul Hoque	..	Non-collegiate student (Ripon College).
	Majumdar, Harendranath	..	Vidyasagar College.
200	,, Jatindranath		Non-collegiate student (Rangpur Carmichael College).
	,, Manmathakumar	..	Bangabasi College.
	,, Satyendranarayan	..	Non-collegiate student (Bhowanipur Ashutosh College).
	Malik, Balaichand	..	Hughli College.
	Mandal, Dulalchandra	..	Vidyasagar College.
	Mangal, Surendranath	..	Ditto.
	Mathew, K. I.	..	Bankura Wesleyan College.
	Md. Lutfur Rahman Khan	..	Presidency College.
	Mirbahar, Harendranath	..	Pabna Edward College.
	Mitra, Ajitkumar	..	Presidency College
210	,, Amalkumar	..	Non-collegiate student (Presidency College)
	,, Anilkrishna	..	Scottish Church College.
	,, Anilkumar	..	City College.
	,, Bholanath	..	Scottish Church College.
	,, Bimalbihari	..	City College.

	Mitra, Debdatta	.. Bankura Wesleyan College.
	„ Debiprasad	.. Bangabasi College.
	„ Gopendralal	.. Scottish Church College.
	„ Krishnacharan	.. Bangabasi College.
	„ Nageschandra	.. Berhampur Krishnath College.
220	„ Pratulkumar	.. City College.
	„ Sisirkumar	.. Vidyasagar College.
	„ Sudhansukumar	.. Non-collegiate student (Roll Cal. N. 30).
	„ Suroschandra	.. Barisal Brajomohan College.
	Mohammad Janay Alam	.. City College.
	Mukhopadhyay, Ajitkumar	.. Bankura Wesleyan College.
	„ Amarnath	.. St. Xavier's College.
	„ Asimaranjan	.. Non-collegiate student (Vidyasagar College).
	„ Chittaranjan	Rangpur Carmichael College.
	„ Debidas	Scottish Church College.
230	„ Jitendranath	.. Non-collegiate student (Barisal Brajomohan College).
	„ Parthasarathi	.. City College.
	„ Rebatiranjan	.. Presidency College.
	„ Satiranjan	.. Daulatpur Hindu Academy.
	„ Sudhindranath	.. Presidency College.
	„ Surendranath	.. St. Xavier's College.
	„ Umasankar	Bankura Wesleyan College.
	Nag, Bijaykrishna	.. Asutosh College, Bhowanipur.
	„ Tapaskumar	.. City College.
	Najibuddin Ahmad	.. Presidency College.
240	Nanda, Phanindrakumar	.. Asutosh College, Bhowanipur.
	Nandi, Nikunjabihari	.. Chittagong College.
	„ Parsanath	.. Hughli College.
	„ Sarajitkumar	.. St. Xavier's College.
	Nath, Jagadischandra	.. Non-collegiate student (Rajshahi College).
	Osborne, T. R.	.. St. Xavier's College.
	Pal, Gaurgopal	.. Bangabasi College.
	„ Kalikinkar	.. Midnapore College.
	„ Kshitischandra	.. Pabna Edward College.
	„ Raghunath	.. Non-collegiate student (Rajshahi College).
250	Pandit, Jyotischandra	.. Non-collegiate student (Rangpur Carmichael College).
	Pramanik, Diptendukumar	.. Non-collegiate student (City College).
	„ Kalidas	.. Ripon College.
	Purkait, Saurindramohan	.. Bhowanipur Ashutosh College.
	„ Sukumar	.. Hughli College.
	Rahimuddin Mondol	.. Non-collegiate student (Rangpur Carmichael College).
	Rajgopal S. Naidu	.. Non-collegiate student (Presidency College).
	Ramchandra Singh	.. Scottish Church College.
	Ray, Barendranath	.. Bangabasi College.
	„ Birendranath	.. Non-collegiate student (Presidency College).
260	„ Debadatta	.. City College.
	„ Gaurgopal	.. Vidyasagar College.
	„ Haripada	.. Non-collegiate student (Ripon College).
	„ Nirmalchandra	.. Rangpur Carmichael College.
	„ Prahlad	.. Ex-student, Presidency College.
	„ Santoshchandra	.. Presidency College.
	„ Satischandra	.. Non-collegiate student (Scottish Church College).
	„ Satyanandanarayan	.. St. Xavier's College.
	„ Sudhansukumar	Non-collegiate student (Rajshahi College).
	„ Susital	.. Gauhati Cotton College.
270	Raychaudhuri, Amalendu	.. Non-collegiate student (Rangpur Carmichael College).
	„ Gurugati	.. Bankura Wesleyan College.
	„ Santoshkumar	.. Non-collegiate student (Roll. Cal. N. 2).
	„ Tapatimohan	.. Scottish Church College.
	Rynjah, Lyngstong	.. Gauhati Cotton College.
	S. Md. Nurul Bashar	.. Chittagong College.
	S. Zahir Ahsan	.. Non-collegiate student (Presidency College).
	Saha, Asutosh	.. City College.
	„ Durgaprasanna	.. Daulatpur Hindu Academy.
	„ Gaurbinod	.. City College.
280	„ Manoranjan	.. Barisal Brajomohan College.
	„ Pramodranjan	.. Rangpur Carmichael College.
	„ Sailendrakumar	.. Non-collegiate student (Bhowanipur Asutosh College).
	Saharay, Chandrakumar	.. City College.
	Sahu, Anilkumar	.. Gauhati Cotton College.
	Samaddar, Sudhirkumar	.. Daulatpur Hindu Academy.
	Samanta, Anantakumar	.. Scottish Church College.
	„ Muktiprakas	.. Bangabasi College.
	„ Radhikaranjan	.. Non-collegiate student(Vidyasagar College).
	Sanyal, Ajitkumar	.. Scottish Church College.
290	„ Hirendranath	.. Vidyasagar College.
	Sarkar, Amulyacharan	.. Pabna Edward College.
	„ Balaichandra	.. City College.
	„ Harisankar	.. Non-collegiate student (Ripon College).
	„ Nripendranath	.. St. Xavier's College.
	„ Prabhatkumar	.. Non-collegiate student (Rajshahi College).
	Sen, Anilkumar	.. Chittagong College.
	„ Binaykumar	.. St. Xavier's College.
	„ Dhurjjatiprasad	.. Chittagong College.
	„ Kshenendramohan	.. Non-collegiate student (Bankura Wesleyan College).

300	Sen, Mihirchandra	.. Rangpur Carmichael College.
	,, Raimohan	.. Krishnagar College.
	,, Sachindranath	.. Non-collegiate student (Ripon College).
	,, Santibhushan	.. Scottish Church College
	,, Sudhindranath	.. Ditto.
	,, Sudhirchandra	.. Ripon College.
	Sengupta, Ajitkumar	.. Bankura Wesleyan College.
	,, Amiyabhushan	.. Barisal Brajomohan College.
	,, Amiyaranjan	.. Sylhet M. C. College.
	,, Brajendrakumar	.. Non-collegiate student (Rajshahi College).
310	,, Harakali	.. Presidency College.
	,, Indubhushan	.. Chittagong College
	,, Nilratan	.. City College.
	,, Nripendrachandra	.. Barisal Brajomohan College.
	,, Pradoshnath	.. Midnapore College.
	,, Subodhchandra	.. Non-collegiate student (Barisal Brajomohan College).
	,, Sudhansukumar	.. Vidyasagar College.
	Set, Batakrishna	.. Bangabasi College.
	Shorfuddeen Md. Chowdhury	.. Non-collegiate student (Sylhet M. C. College).
	Sil, Jnanendranath	.. Barisal Brajomohan College.
320	Sinha, Gopinath	.. Vidyasagar College.
	,, Kanailal	.. Non-collegiate student (Rajshahi College).
	,, Mihirkumar	.. Non-collegiate student (City College).
	,, Sureschandra	.. Scottish Church College.
	Sit, Bimalananda	.. Bankura Wesleyan College.
	,, Satischandra	.. Ditto.
	Sur, Upendranath	.. Bhowanipur Asutosh College.
	Syed Mozaffor Hossain Chowdhuri	.. Barisal Brajomohan College
	Taraphdar, Praphullanath	.. Non-collegiate student (City College).
329	Ziauddin Hyder	.. Presidency College.

The examination of the following candidates for 1931 is cancelled for using unfair means in the Examination Hall, and the candidates are further debarred from appearing at any examination of this University in 1932 :—

Name, with roll number and college.	Subject.
1. Pramathanath Chattopadhyay (regtd. No. 4099 of 1923-24), Cal. 184, Ripon College.	Mathematics, Pass, Paper I.
2. Gaurgopal Ray (regtd. No 2007 of 1926-27), Mid. 4, Midnapore College.	Ditto.

N. SEN,

Controller of Examinations.

Board of Intermediate and Secondary Education, Dacca.

NOTIFICATIONS.

Ramna, Dacca, the 10th July 1931.

No. 3438.—It is hereby notified for the information of authors and publishers that the Standing Committee in Islamic Studies of the Board is likely to meet about the middle of August next to consider text-books in Urdu, Arabic Literature (prose and poetry), Arabic Grammar and Composition, Islamic History, Fiqh and Aqaid for classes VII and VIII of High Madrasas in Bengal for the year 1932. They are invited to forward to this office five copies of any books that they may have to offer for consideration of the Committee as text-books.

No. 3450.—It is hereby notified for the information of authors and publishers that the various Standing Committees of the Board are likely to meet this year about the middle of August next to consider text-books for the High School and Intermediate Examinations to be conducted by the Board in 1934. They are invited to forward to this office five copies of any books that they may have to offer for consideration of the Committees either as text-books or as books recommended for guidance.

A. RAHMAN, *Secretary.*

Orders by the Vice-Chancellor and Syndicate of the Calcutta University.

Senate House, the 30th July 1931.

NOTICE.

The heads of all high schools are informed that schools seeking recognition for the first time should submit their applications on or before the 15th of January, and those seeking recognition in special subjects, *e.g.*, Geography, Mechanics or Hygiene, on or before the 30th of June preceding the year from which such recognition is sought.

A. N. MUKHERJEE, *Registrar.*

Orders by the Vice-Chancellor and Syndicate of the Calcutta University.

Senate House, the 6th August 1931.

The undermentioned candidates are declared to have passed the B. Com. Examination held in May, 1931 :—

FIRST DIVISION.

	Gaggar, Rupnarayan	.. Non-collegiate student, Post-Graduate Teaching in Arts.

SECOND DIVISION.

(In alphabetical order.)

	Alexander, Kashie	.. Non-collegiate student (Vidyasagar College).
	Bandyopadhyay, Anandagopal	.. Vidyasagar College.
	,, Jitendranath	.. Non-collegiate student, Post-Graduate Teaching in Arts.
	,, Satyendriya	.. Ditto.
	Banthia, Mohanlall	.. Non-collegiate student (Vidyasagar College).
	Chakrabarti, Janardanchandra	.. Vidyasagar College.
	,, Kshitischandra	.. Ditto.
	,, Sudhirendu	.. Ditto.
	Chanda, Sudhirchandra	.. Ditto.
10	Chattopadhyay, Harisankar	.. Non-collegiate student, Post-Graduate Teaching in Arts.
	Chaudhuri, Narendranath	.. Ditto.
	,, Rai Sudhindranath	.. Ditto.
	Cherian, C.	.. Ditto.
	Cheriyan, P. K.	.. Ditto.
	Chouthmal Saraf	.. Vidyasagar College.
	Das, Gajiram	.. Non-collegiate student, Post-Graduate Teaching in Arts.
	,, Kuladapratap	.. Ditto.
	Dasgupta, Rathindramohan	.. Ditto.
	De, Hrishikes	.. Vidyasagar College.
20	,, Subodhkumar	.. Ditto.
	Gangopadhyay, Anillal	.. Non-collegiate student, Post-Graduate Teaching in Arts.
	Ghosh, Pramodranjan	.. Ditto.
	,, Ushanath	.. Ditto.
	Goswami, Umapati	.. Ditto.
	Gupta, Aswinikumar	.. Non-collegiate student (Roll Cal. N. 85).
	,, Samarendranath	.. Non-collegiate student, Post-Graduate Teaching in Arts.
	Haldar, Khagendranath	.. Non-collegiate student (Vidyasagar College).
	Iyer, A. Subrama	.. Ditto.
	Jhabarmall Marwary	.. Vidyasagar College.
30	Joseph, K. K.	.. Non-collegiate student, Post-Graduate Teaching in Arts.
	Karim Dad Khan	.. Ditto.
	Lahiri, Ushapati	.. Non-collegiate student (Vidyasagar College).
	Laskar, Radhanirmal	.. Vidyasagar College.
	Laxmishanker V. Katta	.. Ditto.
	M. Jagadisan	.. Non-collegiate student (Vidyasagar College).
	Mahammad Abul Kasem	.. Non-collegiate student, Post-Graduate Teaching in Arts.
	Majumdar, Jitendraranjan	.. Ditto.
	Mathew, J.	.. Ditto.
	Md. Khalil Uddin Miah	.. Ditto.
40	Menon P. Ramachandra	.. Non-collegiate student (Vidyasagar College).
	Mitra, Jagadischandra	.. Non-collegiate student, Post-Graduate Teaching in Arts.
	,, Sitansubhushan	.. Ditto.
	Mukhopadhyay, Anilbihari	.. Vidyasagar College.
	,, Chintaharan	.. Ditto.
	,, Karalikinkar	.. Non-collegiate student, Post-Graduate Teaching in Arts.
	Nair, Achyuthan	.. Non-collegiate student (Vidyasagar College).
	Nath, Apurbakumar	.. Non-collegiate student, Post-Graduate Teaching in Arts.
	Pal, Labanyakumar	.. Vidyasagar College.
	,, Mahendranath	.. Ditto.
50	,, Sahadeb	.. Non-collegiate student, Post-Graduate Teaching in Arts.
	Pande, Kanailal	.. Non-collegiate student (Vidyasagar College).
	Poddar, Kanailal	.. Ditto.

	Rakshit, Bibhutibhushan	..	Vidyasagar College.
	Ram Narayan Trivedi	..	Ditto
	Ray, Debabrata	..	Non-collegiate student, Post-Graduate Teaching in Arts.
	,, Himansumohan	..	Vidyasagar College.
	,, Manindranath	..	Non-collegiate student, Post-Graduate Teaching in Arts.
	,, Sarojprasun	..	Vidyasagar College.
	Sanyal, Sailendranath	..	Ditto.
60	Sarkar, Bhupendranath	..	Non collegiate student, Post-Graduate Teaching in Arts.
	,, Dhirendranath, II	..	Non-collegiate student (Vidyasagar College).
	,, Santoshkumar	..	Non-collegiate student, Post-Graduate Teaching in Arts.
	,, Sushkumar	..	Vidyasagar College.
	Saw Mya Thein	..	Non-collegiate student, Post-Graduate Teaching in Arts.
	Sen, Gaurchandra	..	Vidyasagar College.
	Sengupta, Biswanath	..	Non-collegiate student, Post-Graduate Teaching in Arts.
	Singh, Modanmohan	..	Vidyasagar College.
68	Sinharay, Nripendrajit	..	Non-collegiate student, Post-Graduate Teaching in Arts.

N. SEN,

Controller of Examinations.

University of Dacca.

(Approved by the Executive Council, dated the 23rd July 1931.)

Ramna, Dacca, the 30th July 1931.

Time-table for the B. L. Examinations to be held in January 1932.

Preliminary B. L. Examination

Time—11 a.m. to 3 p.m.

1932.

Monday,	January	4	..	Muhammadan Law and Law of Persons
Monday,	,,	4	..	Muhammadan Law
Tuesday,	,,	5	..	Roman Law.
Wednesday,	,,	6	..	Hindu Law
Thursday,	,,	7	..	Jurisprudence.
Saturday,	,,	9	..	Constitutional Law and History of English Law

Final B. L. Examination.

Time—11 a.m. to 3 p.m.

1932.

Monday,	January	11	..	Law of Real Property, Equity and Trusts.
Monday,	,,	11	..	Law of Real Property, Transfer and Trusts
Tuesday,	,,	12	..	Law of Transfer and Succession.

1932.

Tuesday,	January	12	..	Law of Persons and Law of Testamentary and Intestate Succession.
Wednesday,	,,	13	..	Law of Contracts and Torts.
Thursday,	,,	14	..	Land Laws of Bengal.
Saturday,	,,	16	..	Law of Crimes.
Monday,	,,	18	..	Law of Evidence and Civil Procedure.

Part II (Final) B. L. Examination under the old Ordinances.

Time—11 a.m. to 3 p.m.

1932

Monday,	January	4	..	Muhammadan Law.
Tuesday,	,,	5	..	Roman Law.
Wednesday,	,,	6	..	Hindu Law
Thursday,	,,	7	..	Jurisprudence.
Saturday,	,,	9	..	Constitutional Law and History of English Law.
Monday,	,,	11	..	Law of Real Property, Transfer and Trusts.
Tuesday,	,,	12	..	Law of Persons and Law of Testamentary and Intestate Succession.
Wednesday,	,,	13	..	Law of Contracts and Torts
Thursday,	,,	14	..	Land Laws of Bengal.
Saturday,	,,	16	..	Law of Crimes.
Monday,	,,	18	..	Law of Evidence and Civil Procedure.

N. AHMAD, *Registrar.*

Burdwan Division.

Chinsura, the 7th July 1931.

Rules for the admission of Private Candidates to the Calcutta University Matriculation Examination, 1932.

1. Private students are those who have not attended any recognized or unrecognized High English School for at least one year previous to the Matriculation Examination. The term "private students" includes teachers of schools.

2. Private candidates must appear at the Test Examination to be held on Monday, the 14th December 1931, and the following days at any of the Government High Schools in the Burdwan Division.

3. Applications for admission to the Test Examination must be submitted through the head master of the school in which the applicant last read. The head master, in fowarding the application to this office, should note whether he recommends the application or not. If he does not, his reasons should be stated. The information to be given in, and the documents to be appended (in original) to, the application are the following:—

(*a*) Name of the school in which the candidate last studied.

(*b*) Transfer certificate (in original) granted to the candidate by the head master of the school in which he last read; or

In the case of a candidate who previously appeared at the Entrance or Matriculation Examination, the Registrar's receipt (in original) for the fee paid.

(*c*) Age of the candidate. No candidate is eligible who has not completed the age of fifteen years on the first day of the Matriculation Examination.

(*d*) In the case of school masters, a certificate of good conduct from the Secretary of the school in which the candidate is serving.

(*e*) A certificate from a respectable gentleman other than a relative to the effect that the candidate has prosecuted a regular course of study and has been subject to proper discipline, and that he has not read in any school since the last Matriculation Examination held in March 1931. Detailed information is needed under this head. The person granting the certificate should state his social or professional position.

(*f*) Names of subjects in which the candidate wishes to be examined.

(*g*) Postal address

4. Each private candidate will have to pay a fee of Rs. 6, which should be remitted to the Inspector of Schools, Burdwan Division, Chinsura, along with his application for admission to the Test Examination by the 20th November 1931, after which date a fine of Rs. 2 will have to be paid for each week's delay. *Under no circumstance will the admission fee be refunded.* No private candidate will be admitted to the Test Examination, unless he is accompanied, for the purpose of identification, by some person known to the office of the Inspector of Schools, Burdwan Division, or to the staff of the Zilla School where he will appear. Those who are not *bonâ fide* residents of the Burdwan Division will not be admitted to the Test Examination.

5. **The fee for the Matriculation Examination should NOT be sent to this office.** It should be sent to the Registrar by the candidate himself, together with his countersigned application.

6. The Matriculation Examination for 1932 will be held on the 9th March 1932 and the following days or any other subsequent dates declared by the University.

INTERMEDIATE AND B.A. EXAMINATIONS.

1. Deputy Inspectors of Schools, Sub-Inspectors of Schools and *bonâ fide* teachers of English schools, who have served as such for the full period of three academical years preceding the examinations, will be admitted to the abovementioned examinations.

2. Candidates for the Intermediate and B.A. Examinations must produce certificates of character and length of service from the Secretaries of their respective schools. Candidates for the B.A. Examination must forward with their applications their F.A. or I.A. certificates, and those for the Intermediate Examination their Entrance or Matriculation certificates. Candidates admitted to a former examination must produce the Registrar's receipt in addition.

3. Under section 19 of the Indian Universities Act, candidates for the Intermediate and B.A. Examinations are informed that their applications for admission to these examinations will not be considered, unless they enclose with their applications to this office the sanction of the Senate to appear at the said examinations. Candidates, who have applied for or have obtained the special permission of the Senate for the purpose, are required, under section 9, Chapter XV of the Revised Regulations dealing with the registration of University students, to apply at once to the Registrar for the registration of their names as University students. No person will be deemed a "University student" unless and until his name has been duly registered, and none but "University students" will be eligible for admission to any University examination other than the Matriculation.

4. The printed form of application should be carefully and correctly filled in and submitted to this office on or before the 20th December 1931 at the latest, together with other papers as mentioned in rules 2 and 3, after which no application will be received.

5. The dates of Intermediate and B.A. Examinations of 1932 may be obtained from the Registrar, Calcutta University.

K. C. RAY,
Inspector of Schools.

Education Department, Bengal.

NOTIFICATION.

Calcutta, the 1st August 1931.

No. 3T.B.—It is hereby notified for general information that text-books written in accordance with the syllabuses of studies for secondary schools for boys and girls in Bengal, published with Government notification No. 3059Edn., dated the 13th November 1928, on the following subjects and for class or classes noted against each subject, will be received for consideration by the Secretary, Provincial Text-Book Committee (Writers' Buildings, Block No. V, 1st Floor, Room No. 2), Calcutta, up to 31st March 1932:—

English Translation and Composition—for Classes V and VI.
English Translation—for Classes VII and VIII.
English Copy Book—for Class V.
English Copy Book—for Class VI.
Bengali Grammar—for Classes V and VI
Bengali Composition—for Classes VII and VIII.
Sanskrit Grammar and Composition—for Class VII.
Sanskrit Grammar and Composition—for Class VIII.
Urdu Reader—for Class VII.
Urdu Reader—for Class VIII.
Urdu Grammar and Composition—for Class VII.
Urdu Grammar and Composition—for Class VIII.
Persian Reader—for Class VIII.
Persian Grammar and Composition—for Class VII.
Persian Grammar and Composition—for Class VIII.
Arabic Grammar and Composition—for Class VIII.

No book will be considered which reaches the office of the Secretary after 31st March 1932. Each book should be submitted in six copies together with an application in the following form:—

(*i*) Name of book.
(*ii*) Class for which it is intended.
(*iii*) Name of author.
(*iv*) Name of publisher.
(*v*) Address of author or publisher.
(*vi*) Name and address of press where printed.
(*vii*) Price.
(*viii*) Whether the book was previously submitted for approval, and if so, with what result.

N.B.—(*a*) It is desirable that the title of a book submitted to the Committee for consideration should be printed at the top of each leaf of the book.

(*b*) The canvasing of members of the Text-Book Committee on the part of authors or publishers or any one on their behalf will render their books liable to disqualification.

(*c*) Book submitted to the Secretary should always be in print.

(*d*) The office of the Secretary, Provincial Text-Book Committee, does not hold itself responsible for answering letters regarding books under the consideration of the Committee. The names of books approved will be duly notified.

J. M. BOTTOMLEY,
Director of Public Instrn., Bengal (offg.).

Calcutta University.

Senate House, the 30th July 1931.

NOTICE.

(Preliminary.)

A special Convocation of the Senate will be held at the Senate House, College Square, Calcutta, early in September next to confer degrees on graduates of the year, intending to prosecute their studies abroad.

The exact date of the special Convocation will be notified later.

Candidates concerned should apply to the Registrar, Calcutta University, with a fee of Rs. 15 in each case, on or before the 20th August 1931, for necessary permission to attend the Convocation.

Applications, in case of non-collegiate students, should be submitted to the Registrar direct, and, in the case of collegiate students, through the heads of the institutions concerned, and *they must contain the following particulars*:—

(1) The name and address of the candidate, name of the examination passed, roll number and year of passing the examination.

(2) The name of the college, if any, from which the candidate passed the examination.

(3) The course of study the candidate intends to prosecute abroad.

The candidates who will attend the Convocation will have to be present at the Senate House on the day of the Convocation in full academic costume.

A. N. MUKHERJEE, *Registrar.*

The Calcutta Gazette

THURSDAY, AUGUST 6, 1931.

Part II

Advertisements.

Notices.

Advertisements, Notices, etc., intended for insertion in this Part of the Gazette cannot be received after noon of Saturday.

IMPERIAL BANK OF INDIA.

Statement of the affairs of the Imperial Bank of India on the 24th July 1931.

LIABILITIES.

	Rs.	A.	P.
Subscribed Capital ..	11,25,00,000	0	0
Capital paid up ..	5,62,50,000	0	0
Reserve ..	5,42,50,000	0	0
Public Deposits ..	19,07,00,000	0	0
Other Deposits ..	64,64,78,000	0	0
Loans against securities per contra ..	....		
Loans from the Government of India under section 20 of the Paper Currency Act, against Inland bills discounted and purchased per contra ..	....		
Contingent liabilities ..	....		
Sundries ..	1,10,19,000	0	0
	95,86,97,000	0	0

ASSETS.

	Rs.	A.	P.
Government Securities ..	28,24,76,000	0	0
Other authorized securities under the Act ..	2,76,78,000	0	0
Ways and Means Advances to the Government of India ..	....		
Loans ..	9,08,63,000	0	0
Cash Credits ..	28,47,54,000	0	0
Inland bills discounted and purchased ..	3,89,57,000	0	0
Foreign bills discounted and purchased ..	51,06,000	0	0
Bullion ..	....		
Dead stock ..	2,72,32,000	0	0
Liability of constituents for contingent liabilities per contra ..	....		
Sundries ..	35,51,000	0	0
Balances with other Banks ..	28,07,000	0	0
	76,34,24,000	0	0
Cash ..	19,52,73,000	0	0
	95,86,97,000	0	0

The above balance sheet includes :—

	£
Deposits in London ..	999,900
Advances and Investments in London ..	914,300
Cash and balances at other Banks in London ..	212,400

Percentage 23·02.

Bank rate 6 per cent.

OSBORNE A. SMITH,
K. M. MACDONALD,
Managing Governors.

(1595—1)

LAND SALE NOTICE.

Notification A.

NOTICE is hereby given, under sections 6 and 13, Act XI of 1859, that the undermentioned estates and shares of estates in the district of Nadia will be put up for sale at the office of the Collector of that district on 25th September 1931, at 12 noon, for arrears of revenue and other demands which by law are realizable as arrears of land revenue :—

Tauzi No.	Name of mahal and pargana.	Sadar jama of whole estate.	Whether the whole estate is to be sold.	If only a share is to be sold, specification of such share or shares.	Names of proprietors of property to be sold.	If only a share is to be sold, the sadar jama of such share.	If the whole estate is to be sold, the arrears due from it.	If only a share is to be sold, the arrears due from it.
1	2	3	4	5	6	7	8	9
		Rs. A. P.				Rs. A. P.	Rs. A. P.	Rs. A. P.
491	Sadipur, pargana Rajpur.	18,268 14 9	Whole ..	....	Bhujendra Nath Biswas and others.	..	678 4 7	..
400	Uthali, pargana Shahauzial.	711 0 10	Do. ..	....	Jatindra Nath Basu and others.	..	114 1 11	..
213	Gopalpur, pargana Shahauzial.	2,176 0 5	Do. ..	....	Bilas Roy Agarwala and others.	..	77 13 10	..
3782	Diara mahal char Abdulpur and others, pargana Begamabad.	655 0 0	Do. ..	....	Sourendra Krishna Sinha and others.	..	4,085 12 0	..

Krishnagar, the 20th July 1931. R. S. BHATTACHARJI, *for* Collector of Nadia.

In the Court of the Sub-Judge of Nadia.

TITLE EXECUTION CASE No. 98 OF 1931.

Shibendra Nath Singha Roy and another, decree-holders,

versus

Kanai Lal Singha Roy and another, judgment-debtors.

Date of sale—8th August 1931.

MAUZA Bara Chandghar and Sota Chandghar within the jurisdiction of the Meherpur Sub-Registry, thana Trihatta and mauza Halgobinda within the jurisdiction of the Krishnagar Sub-Registry, thana Kaliganja in the district of Nadia, bearing tauzi No. 105 of the Collectorate of the above district of which the annual revenue is Rs. 4,200-13-9p. The entire 16 annas zamindary interest of the mahals bearing the said number.

Mauzas Dhubilakadi, Senpur, Dhobadanga and Belpukhuria within the jurisdiction of the Krishnagar Sub-Registry, thana Nakashipara in the district of Nadia, bearing tauzi No. 470 of the Collectorate of the said district of which the annual revenue is Rs. 1,262-10-4 p. The entire 16 annas zamindary interest of the mahals bearing the said tauzi number.

T. P. CHATTERJI, Sub-Judge.

Krishnagar, the 31st July 1931. (1599—1)

In the High Court of Judicature at Fort William in Bengal, in insolvency.

NOTICE OF ADJUDICATION ORDER.

No. 175 OF 1931.

Re Ashutosh Seal and Nanda Lal Seal, both residing at No. 5, Wellington Square, in the town of Calcutta, and carrying on business as coach-builders at the said premises in co-partnership under the name and style of G. C. De & Co., *ex parte* the debtors.

S. K. Mukherjee, debtors' solicitor.

ON the 21st day of July 1931, an order was made by the High Court of Judicature at Fort William in Bengal in its insolvency jurisdiction adjudging the abovenamed as insolvents.

NOTE.—All debts due to the estate should be paid to me.

Dated this 24th day of July 1931.

G. M. FALKNER, Official Assignee.

In the High Court of Judicature at Fort William in Bengal, in insolvency.

NOTICE OF ADJUDICATION ORDER.

No. 176 OF 1931.

Re William Clifford Payne, lately residing at No. 4, Turner Street, at present residing at No. 74-B, Elliot Road, in the town of Calcutta, and employed as a Preventive officer in His Majesty's Customs service at 2, Charnock Place, Clive Street, in the town of Calcutta, *ex parte* the debtor in person.

ON the 22nd day of July 1931, an order was made by the High Court of Judicature at Fort William in Bengal in its insolvency jurisdiction adjudging the abovenamed as an insolvent.

NOTE.—All debts due to the estate should be paid to me.

Dated this 25th day of July 1931.

G. M. FALKNER, Official Assignee.

In the High Court of Judicature at Fort William in Bengal, in insolvency.

NOTICE OF ADJUDICATION ORDER.

No. 182 OF 1931.

Re Uttam Chand Asudamul, residing at No. 7/1, Lindsay Street, in the town of Calcutta and lately carrying on business as silk merchant under the name and style of "The Pioneer Silk Store" at stall No. 30F. Block of Sir Stuart Hogg's Market and at No. 8, Bertram Street, in the town of Calcutta and also at No. 6, Mount Pleasant Road, at Darjeeling, now working as an assistant at Chowringhee Grill at No. 1, Chowringhee Road, Calcutta, *ex parte* the debtor.

K. K. Gupta, debtor's solicitor.

ON the 29th day of July 1931, an order was made by the High Court of Judicature at Fort William in Bengal in its insolvency jurisdiction adjudging the abovenamed as an insolvent.

NOTE.—All debts due to the estate should be paid to me.

Dated this 31st day of July 1931.

G. M. FALKNER, Official Assignee.

In the High Court of Judicature at Fort William in Bengal, in Insolvency.

NOTICE OF ADJUDICATION ORDER.

No. 177 of 1931.

Re Edward Crawshaw Kerr, residing at No. 7, Royd Street, in the town of Calcutta, and employed by Messrs. Breakwell & Co., at 43-44, Free School Street, Calcutta, *ex parte* the debtor in person.

ON the 22nd day of July 1931, an order was made by the High Court of Judicature at Fort William in Bengal in its insolvency jurisdiction adjudging the abovenamed as an insolvent.

NOTE.—All debts due to the estate should be paid to me.

Dated this 25th day of July 1931.

G. M. FALKNER, Official Assignee.

In the High Court of Judicature at Fort William in Bengal, in Insolvency.

NOTICE OF ADJUDICATION ORDER.

No. 178 of 1931.

Re Charles Edward Andsley residing at 22, Elliot Lane, in the town of Calcutta and employed as a Preventive Officer in His Majesty's Custom Service at 2, Charnock Place, Clive Street, in Calcutta aforesaid, *ex parte* the debtor in person.

ON the 24th day of July 1931, an order was made by the High Court of Judicature at Fort William in Bengal in its insolvency jurisdiction adjudging the abovenamed as an insolvent.

NOTE.—All debts due to the estate should be paid to me.

Dated this 31st day of July 1931.

G. M. FALKNER, Official Assignee.

In the High Court of Judicature at Fort William in Bengal, in Insolvency.

NOTICE OF ADJUDICATION ORDER.

No. 179 of 1931.

Re Raghunandan Prosad Dobay, residing at No. 12, Tansuk Lane, in the town of Calcutta, carrying on business as an order supplier at No. 12, Tansuk Lane, in Calcutta, under the name and style of Raghunandan Prosad Dobay, *ex parte* the debtor in person.

ON the 24th day of July 1931, an order was made by the High Court of Judicature at Fort William in Bengal in its insolvency jurisdiction adjudging the abovenamed as an insolvent.

NOTE.—All debts due to the estate should be paid to me.

Dated this 31st day of July 1931.

G. M. FALKNER, Official Assignee.

In the High Court of Judicature at Fort William in Bengal, in Insolvency.

No. 210 of 1930.

Re Estate A. McGregor.

THE above insolvent, lately carrying on business as a jute broker at No. 137, Canning Street, in the town of Calcutta, having absconded without filing a schedule of his affairs, notice is hereby given that persons claiming to be creditors of the said insolvent must submit their claims in this office supported by affidavit and necessary vouchers by the 15th proximo to enable me to prepare a schedule of creditors of the above insolvent. Claims received by this office after the 15th August next will not be considered.

Further notice is hereby given that a dividend is intended to be declared in the above estate by the 15th September next.

G. M. FALKNER, Official Assignee.

10, Old Post Office Street, Calcutta, 27th July 1931.

(1591—1)

In the Court of the Sub-Judge at Asansol.

Section 19(2) of the Provincial Insolvency Act, V of 1920.

INSOLVENCY CASE No. 38 of 1931.

NOTICE is hereby given to his creditors that the insolvency petition filed by the judgment-debtor Eric St. Clair Pedroza, Guard, East Indian Railway, Asansol, has been admitted and 14th August 1931 has been fixed for hearing thereof.

A. K. CHAKRAVERTY, Sub-Judge.

Asansol, the 27th July 1931. (1592—1)

In the Court of the Sub-Judge at Asansol.

Section 19(2) of the Provincial Insolvency Act, V of 1920.

INSOLVENCY CASE No. 46 of 1931.

NOTICE is hereby given to his creditors that the insolvency petition filed by the judgment-debtor H. A. Dozey, Guard, East Indian Railway, Asansol, has been admitted and 7th August 1931 has been fixed for hearing thereof.

A. K. CHAKRAVERTY, Sub-Judge.

Asansol, the 27th July 1931. (1593—1)

ORDER OF ADJUDICATION.

Section 27 of the Provincial Insolvency Act, V of 1920.

In the Court of the District Judge at Chittagong.

INSOLVENCY APPLICATION No. 34 of 1930.

PURSUANT to a petition, dated 20th August 1930, filed by Basarat Ali and Maulvi Mafzalor Rahaman, sons of Ramjan Ali Pandit of Nowoopur, police-station Fatikchary, Chittagong, and on the application of petitioners and on reading the petition and hearing the pleader, it is ordered that the debtor be and the said debtor is hereby adjudged insolvent.

Dated this 26th day of June 1931.

J. YOUNIE, District Judge.

(1431—1—1561)

ORDER OF ADJUDICATION.

Section 27 of the Provincial Insolvency Act, V of 1920.

In the Court of the District Judge at Chittagong.

INSOLVENCY APPLICATION No. 7 of 1931.

PURSUANT to a petition, dated 6th March 1931, filed by Anu Mea, son of late Munshi Torabali of Madarbari, Chittagong, and on the application of petitioner and on reading the petition and hearing the pleader, it is ordered that the debtor be and the said debtor is hereby adjudged insolvent. He is directed to apply for his discharge by 27th January 1932.

Dated this 26th day of June 1931.

J. YOUNIE, District Judge.

(1432—1—1562)

ORDER ANNULLING ADJUDICATION.

Section 35 of the Provincial Insolvency Act, V of 1920.

In the Court of the District Judge at Chittagong.

INSOLVENCY APPLICATION No. 32 of 1930.

Lal Mea Sadagor, son of Osimea Sadagor of Halisahar, Chittagong, applicant.

THE abovenamed insolvent not having applied for his discharge within the time fixed by the Court, it is ordered that the order of adjudication, dated the 12th December 1930, against Lal Mea Sadagor of Halisahar be and the same is hereby annulled.

Dated this 13th day of June 1931.

J. YOUNIE, District Judge.

(1433—1)

NOTICE TO CREDITORS OF THE DATE OF HEARING OF AN INSOLVENCY PETITION.

Section 19 of the Provincial Insolvency Act, V of 1920.

In the Court of the District Judge at Chittagong.

INSOLVENCY APPLICATION No. 22 OF 1931.

WHEREAS Gagan Chandra Das, son of Biswamber Das, of Kadhurkhil, police-station Boalkhali, Chittagong, has applied to this Court, by a petition, dated 11th day of June 1931, to be declared an insolvent under the Provincial Insolvency Act, V of 1920, this is to give notice to his creditors that the Court has fixed the 2nd day of September 1931 for the hearing of the aforesaid petition and the examination of the debtor.

J. YOUNIE, District Judge.

Chittagong, the 24th July 1931. (1577—1)

ORDER OF ADJUDICATION.

Section 27 of the Provincial Insolvency Act, V of 1920.

In the Court of the District Judge at Chittagong.

INSOLVENCY APPLICATION No. 17 OF 1930.

PURSUANT to a petition, dated 3rd May 1930, filed by Rasick Chandra Pathar, son of late Baneswar Pathar, of Patharghata, Chittagong, and on the application of the petitioner and on reading the petition and hearing the pleader, it is ordered that the debtor be and the said debtor is hereby adjudged insolvent. Mr. J. R. Percival is appointed receiver.

It is further ordered that the debtor do apply for his discharge within 20th January 1932.

Dated this 18th day of July 1931.

J. YOUNIE, District Judge.

(1578—1)

ORDER OF ADJUDICATION.

Section 27 of the Provincial Insolvency Act, V of 1920.

In the Court of the District Judge at Chittagong.

INSOLVENCY APPLICATION No. 51 OF 1930.

PURSUANT to a petition, dated 22nd December 1930, filed by Akhil Chandra Pathar, son of late Baneswar Pathar, of Patharghata, police-station town Chittagong, and on the application of the petitioner and on reading the petition and hearing the pleader, it is ordered that the debtor be and the said debtor is hereby adjudged insolvent. Mr. J. R. Percival is appointed receiver.

It is further ordered that the debtor do apply for his discharge within 20th January 1932.

Dated this 18th day of July 1931.

J. YOUNIE, District Judge.

(1579—1)

In the 3rd Court of the Sub-Judge of Dacca.

NOTICE is hereby given to all concerned that Messrs. Ram Kumar Akshoy Kumar Monmohan Sarder, creditor, has filed a petition in this Court to adjudicate insolvent Sheik Wajuddi Bepari of Gadighat, post office Maijpara, police-station Sreenagar, district Dacca, and the date of hearing of the said petition is fixed on 20th August 1931.

S. C. SIL, Sub-Judge.

Dacca, the 20th July 1931. (1550—1)

In the Court of the District Judge of Khulna.

INSOLVENCY CASE No. 10 OF 1931.

IT is notified that Jogendranath Nath, son of late Budhimanta Nath of Khalishkhali, police-station Tala, district Khulna, has applied on 6th July 1931 for adjudication as insolvent and 22nd August 1931 has been fixed for hearing of the petition.

E. S. SIMPSON, District Judge.

Khulna, the 29th July 1931. (1596—1)

In the Court of the Addl. Sub-Judge, Malda.

INSOLVENCY CASE No. 5 OF 1931.

NOTICE is hereby given under the Provincial Insolvency Act, V of 1920, to his creditor that the petition of Munnu Hazi, son of late Nashi-bulla Momin, of Lakhmipore, police-station Kaliachak, district Malda, has been admitted by this office in insolvency case No. 5 of 1931 and that the 15th day of August 1931 has been fixed for hearing thereof.

N. N. GUHA, Addl. Sub-Judge.

Malda, the 23rd July 1931. (1585—1)

In the Court of the District Judge of Mymensingh.

INSOLVENCY CASE No. 29 OF 1931.

NOTICE is hereby given that Messrs. Kissen Mall Himmat Mall, a firm, carrying on business at Nandina Bazar, police-station Jamalpur, district Mymensingh, has applied to this Court to be adjudged an insolvent and the 22nd day of August 1931 has been fixed for hearing the case.

R. F. LODGE, District Judge.

Mymensingh, the 25th July 1931. (1580—1)

In the Court of the District Judge of Mymensingh.

INSOLVENCY CASE No. 30 OF 1931.

ON the application of Purna Chandra Chaudhury, a creditor, against his debtor Jatish Chandra Chaudhury, son of late Ramesh Chandra Chaudhury, resident of Danga, police-station Nagarpur, within the district of Mymensingh, for adjudicating the said debtor an insolvent, notice is hereby given to his creditors that the said petition has been admitted by this Court and that 22nd day of August 1931 has been fixed for hearing the case.

R. F. LODGE, District Judge.

Mymensingh, the 25th July 1931. (1581—1)

In the Court of the District Judge of Mymensingh.

INSOLVENCY CASE No. 31 OF 1931.

ON the application of Purna Chandra Choudhury, creditor, against his debtor Srish Chandra Choudhury, son of late Ramesh Chandra Choudhury, resident of Danga, police-station Nagarpur within the district of Mymensingh, for adjudicating the said debtor an insolvent, notice is hereby given to his creditors that the said petition has been admitted by this Court and that 29th day of August 1931 has been fixed for hearing the case.

R. F. LODGE, District Judge.

Mymensingh, the 20th July 1931. (1600—1)

NOTICE OF ADJUDICATION ORDER.

In the Court of the District Judge of Noakhali.

INSOLVENCY CASE No. 13 OF 1929.

Re Guru Charan Shaha, son of late Krishna Chandra Shaha of Mahadevpur, police-station Lakshmipur, district Noakhali, the debtor in person.

ON the 25th day of June 1931 an order was made by the District Judge of Noakhali in his insolvency jurisdiction adjudging the abovenamed as an insolvent.

H. C. SANYAL, *for* District Judge.

Noakhali, the 23rd July 1931. (1571—1)

NOTICE OF ADJUDICATION ORDER.

In the Court of the District Judge of Noakhali.

INSOLVENCY CASE No. 6 OF 1930.

Re Chandra Hari Nath, son of late Banshi Badan Nath, of Kendurbagh, police-station Begamganj, district Noakhali, the debtor in person.

ON the 11th day of July 1931 an order was made by the District Judge of Noakhali in his insolvency jurisdiction adjudging the abovenamed as an insolvent.

[ILLEGIBLE], *for* District Judge.

Noakhali, the 23rd July 1931. (1572—1)

NOTICE OF ADJUDICATION ORDER.

In the Court of the District Judge of Noakhali.

INSOLVENCY CASE No. 8 OF 1930.

Re Naba Krishna Bepari, son of late Ram Mani Bepari, of Madhavsingh, police station Begamganj, district Noakhali, the debtor in person

ON the 15th day of July 1931, an order was made by the District Judge of Noakhali in his insolvency jurisdiction adjudging the abovenamed as an insolvent.

H. C SANYAL, *for* District Judge.

Noakhali, the 23rd July 1931 (1573—1)

In the 4th Court of the Sub-Judge of 24-Parganas.

INSOLVENCY CASE No. 254 OF 1931.

Khirode Behary Goswami of 19, Paikpara Road, Chitpore, 24-Parganas, applicant.

To Satya Prasad Chatterjee of 7/3, Telipara Lane, Shambazar, Calcutta, and others, creditors.

ON the 13th day of July 1931, it was ordered that the matter of the petition of the applicant be heard on the 24th day of August 1931 and that the said applicant do attend to be examined by this Court on that date.

S. N ROY, Sub-Judge.

Alipore, the 14th July 1931. (1515—1—1585)

In the 4th Court of the Sub-Judge of 24-Parganas.

INSOLVENCY CASE No. 258 OF 1931.

Abdul Hossain of Behaghata Main Road, 24 Parganas, applicant

To Mirja Ali Ispahani of Coolotola Street, Calcutta, creditor

ON the 13th day of July 1931, it was ordered that the matter of the petition of the applicant be heard on the 24th day of August 1931 and that the said applicant do attend to be examined by this Court on that date.

S. N ROY, Sub-Judge

Alipore, the 14th July 1931. (1516—1—1586)

In the 4th Court of the Sub-Judge of 24-Parganas.

INSOLVENCY CASE No. 260 OF 1931.

Ali Mia of Kashba, police-station Tollygunge, 24-Parganas, applicant

To Jamuna Kanu, Kashba, post-office Dhakuria, 24-Parganas, and others, creditors

ON the 10th day of July 1931, it was ordered that the matter of the petition of the applicant be heard on the 17th day of August 1931 and that the said applicant do attend to be examined by this Court on that date

S. N. ROY, Sub-Judge.

Alipore, the 11th July 1931. (1517—1—1587)

In the 4th Court of the Sub-Judge of 24-Parganas.

INSOLVENCY CASE No. 263 OF 1931.

Santosh Kumar Mojumdar of 1, Kartic Bose Lane, Calcutta, at present Presidency Jail, applicant

To Pandit Bhakat Acharjya of Ashi Sangam, Benares, and others, creditors.

ON the 13th day of July 1931, it was ordered that the matter of the petition of the applicant be heard on the 24th day of August 1931 and that the said applicant do attend to be examined by this Court on that date

S. N. ROY, Sub-Judge.

Alipore, the 14th July 1931. (1518—1—1588)

In the 4th Court of the Sub-Judge of 24-Parganas.

INSOLVENCY CASE No. 270 OF 1931.

Sk. Ellahie, of Kamarhati, Jumman Chaudhuri's Khatal, Baranagore, 24-Parganas, applicant.

To Mahanand Singh, of Titagarh, 24-Parganas, and others, creditors

ON the 8th day of July 1931, it was ordered that the matter of the petition of the applicant be heard on the 17th day of August 1931, and that the said applicant do attend to be examined by this Court on that date.

S. N. ROY, Sub-Judge.

Alipore, the 10th July 1931. (1519—1—1589)

In the 4th Court of the Sub-Judge of 24-Parganas.

INSOLVENCY CASE No. 271 OF 1931.

Maharaj Bahadur Lala, of Bowbazar, Titagarh, 24-Parganas, applicant

To Byron & Co, of 2, Central Avenue, Calcutta, and others, creditors.

ON the 13th day of July 1931, it was ordered that the matter of the petition of the applicant be heard on the 24th day of August 1931 and that the said applicant do attend to be examined by this Court on that date.

S. N. ROY, Sub-Judge.

Alipore, the 14th July 1931. (1520—1—1590)

In the 4th Court of the Sub-Judge of 24-Parganas.

INSOLVENCY CASE No. 272 OF 1931.

Mahat Ali Mondal, of Thewa *dak* Rojpore, 24-Parganas, applicant.

To Sm Asaruemoti Choudhurani of Taki, police-station Hasnabad, 24 Parganas, and others, creditors.

ON the 11th day of July 1931, it was ordered that the matter of the petition of the applicant be heard on the 24th day of August 1931 and that the said applicant do attend to be examined by this Court on that date.

S. N. ROY, Sub-Judge.

Alipore, the 13th July 1931. (1521—1—1591)

In the 4th Court of the Sub-Judge of 24-Parganas.

INSOLVENCY CASE No 273 OF 1931.

Kalu Mondal, of Ahira, 24-Parganas, applicant.

To Bhadreswar Sankey, of Singerber, Sodepur, 24 Parganas, and others, creditors.

ON the 13th day of July 1931, it was ordered that the matter of the petition of the applicant be heard on the 24th day of August 1931 and that the said applicant do attend to be examined by this Court on that date.

S. N. ROY, Sub Judge.

Alipore, the 14th July 1931. (1522—1—1592)

ANIL CHANDRA DUTTA, M A., B.L, intends to be enrolled as an Advocate of the Calcutta High Court

(1544—4—1558)

ASHOKE NATH MUKHERJI, B L., M SC., intends to be enrolled as an Advocate, Calcutta High Court.

(1536—4—1536)

BISNURAM MEDHI, M. SC., B.L., of Gauhati, intends to be enrolled as an Advocate, High Court, Calcutta.

(1541—4—1540)

BABU JITENDRANATH GUHA, M.A., B.L., intends to be enrolled as an Advocate, High Court, Calcutta.

(1478—4 1470)

HOLIRAM DEKA, M.A., B.L., intends to be enrolled as an Advocate of the High Court, Calcutta.

(1593—4—1594)

JOGESCHANDRA DE, B.L., intends to practise as an Advocate, Calcutta High Court.

(1487—4—1489)

KALYAN KUMAR BASU, M.A., B.L., intends to be enrolled as an Advocate, Calcutta High Court.

(1488—4—1504)

MR. NRIPENDRANATH DUTTA RAY, B.SC., B.L., wants to be enrolled as an Advocate of the High Court.

(1485—4—1487)

MR. KAMALES CHANDRA SEN, M.A., B.L., intends to enroll himself as an Advocate, Calcutta High Court.

(1498—4—1508)

MR. MONINDRA CHANDRA NIYOGY intends to be enrolled as an Advocate of the Calcutta High Court.

(1502—4—1512)

MR. RAMKRISHNA PAL, B.L., intends to be enrolled as an Advocate of the Calcutta High Court.

(1509—4—1509)

MR. KASHI NATH MITTER intends to practise as an Advocate in the High Court, Calcutta.

(1510—4—1510)

MR. SAMBHU NATH BANERJEE, M.A., B.L., wants to be enrolled as an Advocate of the Calcutta High Court.

(1511—4—1531)

MR. DHIRENDRA NATH GUHATHAKURTA intends to be enrolled as an Advocate, Calcutta High Court,

(1537—4—1537)

MR. DEBENDRA NATH DATTA intends to be enrolled as an Advocate of the High Court, Calcutta.

(1545—4—1542)

MR. DHIRENDRA MOHAN DEB, B.L., intends to enroll himself as an Advocate of the Calcutta High Court.

(1558—4—1546)

MR. ATINDRA NATH BHADRA, B.L., intends to enroll himself as an Advocate of the Calcutta High Court.

(1559—4—1547)

MR. PRAFULLA KUMAR RAY intends to be enrolled as an Advocate of the Calcutta High Court.

(1583—4—1597)

MR. SUKUMAR SEN GUPTA, B.L., intends to be enrolled as an Advocate of the Calcutta High Court.

(1587—4—1610)

MR. CHANDRA SEKHAR BHAWMICK, B.L., intends to be enrolled as an Advocate of the Calcutta High Court.

(1588—4—1609)

MR. UPENDRA NATH PAL, B.L., intends to be enrolled as an Advocate of the Calcutta High Court.

(1631—4—1611)

RAJENDRA NATH BHATTACHARYYA, M.A., B.L., intends to be enrolled as an Advocate of the High Court.

(1542—4—1548)

NOTICE is hereby given that Mr. Bhuramal Agrawal, of No. 19, Tarachand Dutt Street, Calcutta, who was lately under Articles of Clerkship to Mr. Sanat Kumar Chatterji, Advocate, intends to apply to be admitted as an Advocate of the High Court of Judicature at Fort William in Bengal.

Dated this 17th day of July 1931.

(1535—4—1535)

WANTED a head master for a Government High School in Bengal in the Men's Branch of the Bengal Educational Service.

2. Candidates, who should be British subjects and not over 45 years of age, must possess a first class degree as M. A. or M. Sc. of an Indian University, or Honours degree (or corresponding qualification) of a European or American University. They must also possess a degree in teaching of an Indian University or a diploma or degree in teaching of a European or American University.

3. Candidates must produce evidence of an outstanding capacity for developing the corporate life of a school, of power of maintaining discipline, of capacity for control, and of a satisfactory record of teaching experience.

4. Canvassing will be regarded as a disqualification.

5. Applications with documentary evidence of the qualifications possessed will be received up to 30th August 1931 by the Assistant Director of Public Instruction, Bengal, Writers' Buildings, Calcutta.

WANTED a Head Clerk and Accountant for the District Engineer's Office, Bogra, on Rs. 80—2—100 per month.

Applications with copies of testimonials as to candidate's age, character, ability and past experience should reach this office on or before the 10th August 1931.

None need apply who is not qualified under rules published in Government notification No. 3334 L.S.-G., dated the 20th December 1901, as amended up to date.

The selected candidate will have to join at once.

ALTAF ALI, Chairman.

Bogra, the 23rd July 1931. (1590—1)

WANTED a District Engineer for the District Board of Hooghly on Rs. 300—20/2—400 and second class travelling allowance according to the Fundamental Rules. Applicants should possess the necessary qualifications as required under the rules framed under the Bengal Local Self-Government Act. The selected candidate will be on probation for one year and will have to join on 1st of October 1931. No travelling allowance will be paid to join the appointment. Applications stating age, qualifications and past experience with true copies of testimonials and certificates should be sent in sealed and registered covers and superscribed as "Application for appointment of District Engineer" to the undersigned by the 25th August 1931. Canvassing will be considered a disqualification. The applicant should state if he bears any relationship to any of the members of the Board.

Candidates, if required, shall have to come for interview at their own expense.

TARAKNATH MUKERJEA, Chairman,
District Board, Hooghly.

Chinsura, the 29th July 1931. (1597—3)

Imperial Bank of India.

THE following appointment in the Bank's staff is hereby notified :—

Mr. B. A. C. Neville to be officiating Deputy Secretary and Treasurer as from 27th July 1931, *vice* Mr. B. Stephenson, O.B.E., M.C.

OSBORNE A. SMITH,
K. M. MACDONALD,
Managing Governors.

Calcutta, the 28th July 1931. (1589—1)

Imperial Bank of India.

THE following appointments on the Bank's staff are hereby notified :—

Mr. J. M Muir was in charge of Moulmein Branch from the 16th to the 22nd June 1931, inclusive, *vice* Mr R. C Anderson

Mr. A M. Rutherford was in charge of Asansol Branch from the 25th to the 30th June 1931, inclusive, *vice* Mr. T. L L. Bean

Mr. L N. Varma was in charge of Sargodha Branch on the 1st and 2nd June 1931, *vice* Mr R D. Ahluwalia

Mr A. L. W. Fleming to be Agent, Peshawar Cantonment Branch, as from the 8th July 1931, *vice* Mr. W. J. Lutley.

Mr. Gur Prasad was in charge of Mirzapur Branch from the 7th to the 15th July 1931, *vice* Mr. M C Day

Mr. J W Shepard was in charge of Delhi Branch on the 17th and 18th July 1931, *vice* Mr H A Page.

Mr. W J Lutley was in charge of New Delhi Branch on the 17th and 18th July 1931, *vice* Mr J H. King

M. G STUART,
Secretary and Treasurer

Calcutta, 23rd July 1931 (1574—1)

THE Bengal and Madras Service Family Pension Fund which is provisionally managed and assisted by Government has for its object the provision of monthly pensions for the maintenance of the widows and children of subscribers and is open, with certain exceptions, to all active and pensioned members of the Uncovenanted service of Government (except those serving under the Government of Bombay), and to Local Fund servants earning pensions from Government. Some of the special features of the fund are—(1) that widowed daughters incapable of remarriage or children labouring under such mental or bodily infirmities as incapacitate them from earning their livelihood or preclude the possibility of marriage (in caseof a daughter) are admitted to its benefits; and (2) that subscribers to the Widows' and Daughters' branches are entitled to a refund of 30 per cent. of the premia paid, should the nominee predecease them after five years of admission. The second quinquennial valuation of the Fund has been completed by the actuary to the Government of India, and his report discloses very favourable results. For forms of application and rules of the Fund apply to the Accountant-General, Bengal, Imperial Secretariat Buildings, Calcutta

---

The Commissioners for the Port of Calcutta.

NOTIFICATION No. 95.

IT is notified for general information under the provisions of section 107 of the Calcutta Port Act, III (B.C) of 1890, and with the approval of the Local Government that on and from the 1st of July 1931, section 23 (*a*), (*b*) and (*c*) of the Commissioners' Scales of Charges will be cancelled and replaced by the following :—

23 *Jute.*—Burst bales and bales opened for examination—

(*a*) *Bales ex wagons.*—The Commissioners return to the Press Houses, free of charge, examination bales, bales received at the docks in burst condition and bales that burst after arrival

(*b*) *Bales ex boats, carts and lorries.*—Bales that burst after arrival, and examination bales, if not removed within four days after official advice has been given, incur rent at the rate of 2 annas per bale per week or part of a week for the first week, 4 annas per bale for the second week, 8 annas per bale for the third week and Re. 1 per bale for the fourth week. If the bales are not removed by the shippers within a month after arrival they will be sold to defray the Commissioners' charges incurred

By order of the Commissioners,

C. W. T. HOOK, Secretary (offg.).

Calcutta, the 15th July 1931. (1586—1)

Notice to creditors.

Estate Emma (Amy) Margaret Higgins, deceased

PURSUANT to section 360 of Act XXXIX of 1925 and section 42 of Act XXVIII of 1866, the creditors and all persons interested in the estate of Emma (Amy) Margaret Higgins, late of the Petiya Tea Estate, Chittagong, who died at Penn, Buckinghamshire, England, on or about the 3rd day of June 1931, and Probate of whose Will was granted by the High Court, Calcutta (with effect throughout the whole of British India), on the 8th day of July 1931, to John Mathews Hartley, at present of "Sherston," Kurseong, D. H. Railway, and Kenneth John Harold Hartley of 8, Clive Street, Calcutta, two of the executors named therein, are hereby required to submit particulars of their claims, with supporting vouchers, to the said John Mathews Hartley on or before the 7th day of September 1931, after which date the executors will proceed to distribute the assets of the estate, having regard only to the claims of which notice shall then have been received All persons indebted to the estate are requested to make payment of their respective debts without delay

ORR, DIGNAM & Co.,

Solicitors to the Executors abovenamed.

32, Dalhousie Square, South, Calcutta, 22nd July 1931.

(1547 -1 1559)

Notice to Creditors.

Estate Ernest William Oswald, deceased.

PURSUANT to section 360 of Act XXXIX of 1925 and section 42 of Act XXVIII of 1866, the creditors and all persons interested in the estate of Ernest William Oswald, late of 65, Birch Road, Penang, Straits Settlement in the Province of Wellesley, who died at Sunderchack, Bengal, on or about the 27th day of March 1931, and Letters of Administration, with copy Will annexed, to whose estate were, on the 3rd day of July 1931, granted by the High Court, Calcutta (with effect within the Province of Bengal), to Noel Lincoln Fisher of No 4, Dalhousie Square, East, Calcutta, Bank Manager, are hereby required to submit particulars of their claims, with supporting vouchers, to the undersigned on or before the 7th day of September 1931, after which date the Administrator will proceed to distribute the assets of the estate, having regard only to the claims of which notice shall then have been received. All persons indebted to the estate are requested to make payment of their respective debts without delay.

ORR, DIGNAM & Co.,

Solicitors to the Administrator abovenamed.

32, Dalhousie Square, South, Calcutta, 22nd July 1931.

(1548—1—1560)

Notice to Creditors.

Estate Daniel, otherwise Dane, Sinclair, deceased.

PURSUANT to section 360 of Act XXXIX of 1925 and section 42 of Act XXVIII of 1866, the creditors and all persons interested in the estate of Daniel, otherwise Dane, Sinclair, late of Oakwood, Heybridge, Surrey, England, who died at that address on or about the 6th day of May 1930, and Letters of Administration, with copy Will annexed, to whose estate were, on the 8th day of June 1931, granted by the High Court, Calcutta (with effect within the Province of Bengal), to Euan William Galloway Malcolm, of Clive Buildings, 8, Clive Street, Calcutta, are hereby required to submit particulars of their claims, with supporting vouchers, to the undersigned on or before the 7th day of September 1931, after which date the Administrator will proceed to distribute the assets of the estate, having regard only to the claims of which notice shall then have been received All persons indebted to the estate are requested to make payment of their respective debts without delay

ORR, DIGNAM & Co.,

Solicitors to the Administrator abovenamed

32, Dalhousie Square, South, Calcutta, 25th July 1931.

(1576—1—1593)

Currency Note.

A PORTION of the following Currency note of the Calcutta circle of issue is stated to have been destroyed and payment of its value has been claimed by the person whose name is shown against the number.

Any other person claiming a right to it is warned to communicate at once with the undersigned—

Regd. No.	Note No.	Value. Rs.	Name and address of the claimant.
WD 8 of 31-32.	S/36,914033	100	Suresh Chandra Dass, of Messrs. Dass & Co., Janiganj Bazar, Silchar P. O.

B. C. DUTT, Currency Officer.

Currency Office, Calcutta, the 10th July 1931.

Currency Notes.

PORTIONS of the following Currency Notes of the Calcutta Circle of issue are stated to have been destroyed and payment of their value has been claimed by the person whose name is shown against the numbers.

Any other person claiming a right to them is warned to communicate at once with the undersigned:—

Regd. No.	Note No.	Value. Rs.	Name and address of the claimant.
WD. 9 of 31-32.	S/29, 959428	100	Krishna Hari Barman, Gobnahati, Shitakuchi, post-office Cooch Behar.
	S/19, 598674	100	

B. C. DUTT, Currency Officer.

Currency Office, Calcutta, the 10th July 1931.

Lost.

THE lower halves of the Government Promissory Notes Nos. 177497 and 148883 of the 3½ per cent. loans of 1854-55 and 1842-43 for Rs. 500 each, originally standing in the names of Amrita Chandra Ghose and the Bank of Bengal, respectively, and last endorsed to the Secretary, Gabha High School, the proprietor, by whom they were never endorsed to any other person, having been lost, notice is hereby given that payment of the above notes and the interest thereupon have been stopped at the Public Debt Office, Imperial Bank of India, Calcutta, and that application is about to be made for the issue of duplicates in favour of the proprietor. The public are cautioned against purchasing or otherwise dealing with the abovementioned securities.

Name of the Advertiser—Priyanath Ghose, Head Master and Assistant Secretary.

Residence—Gabha High School, Gabha, district Barisal.

(962—3—1541)

Lost.

A RECEIPT numbered 36250, dated 7th January 1930, and granted by the Public Debt Office, Imperial Bank of India, on submission of the undermentioned Government Promissory Note. Notice of loss has been given to the Public Debt Office, Imperial Bank of India, and the undersigned is about to apply for surrender of the security—

G. P. Note No.	Loan.	Amount. Rs.	Holder's Name.
D016631	6 per cent., 1930.	100	Jeebon Kaly Basu.

Name of the Proprietor—Jeebon Kaly Basu.

Residence—Panchla, district Howrah.

(1570—1—1564)

The Bengal Provincial Co-operative Bank, Limited.

IT is hereby notified for the general information of its members that the twelfth annual general meeting of the Bengal Provincial Co-operative Bank, Limited, will be held on Sunday, the 30th August 1931, at 1-30 p.m., at 12, Mission Row (new office buildings of Messrs. Martin & Co.), Calcutta, when the following items of business will be taken up :—

Business.

1. Consideration of the Annual Report, Accounts and Balance Sheets for the years 1929 and 1930.
2. Amendment of by-laws.
3. Election of the Board of Directors for the year 1931.
4. Distribution of profits.
5. Fixing of the maximum amount of borrowing by the Provincial Bank, including borrowings from non-members, for the year 1931.
6. Transaction of such other business as may be laid before the meeting by the Board of Directors.
7. Consideration of such other subjects as may be introduced with the permission of the majority of the members present.

R. N. MOOKERJEE, Chairman.

Calcutta, the 27th July 1931. (1584—1—1584)

In the matter of the Indian Companies Act, VII of 1913, and

In the matter of Smith, Stanistreet and Company, Limited.

NOTICE is hereby given that a petition has been presented to the Honourable Mr. Justice Buckland at the High Court, Calcutta, for an order confirming the reduction of the share capital of the abovenamed Company from Rs. 20,00,000 to Rs. 12,50,000 resolved on by a special resolution passed and confirmed at extraordinary general meetings of the said Company, held respectively on the 16th day of June 1931 and the 2nd day of July 1931.

The said petition is directed to be heard by the said Court at the Court-house, Calcutta, on Monday, the 31st day of August 1931.

ORR, DIGNAM & Co., Solicitors for the Company.

Calcutta, the 23rd July 1931.

(1565—1—1565)

THE stock of the Indian Law Reports, Calcutta series for the years 1901 to 1920, have been sold to Messrs. M. Subramaniam and M. V. Krishnaswamy, High Court Vakils, 8, Wood Road, Mount Road, Madras. They have also been granted the right to reprint *facsimile* any of these volumes that may already have gone or may go out of print.

The Governments of Bombay, Madras and the United Provinces have also transferred to the same firm the stock of their series of the Law Reports with similar rights for reprinting.

Intending customers for the Law Reports for these years should henceforth address the abovementioned firm direct.

Inquiries for the Calcutta series for 1876 to 1900 and 1921 onwards should, however, be sent to the undersigned. The Calcutta series for 1876-78, 1880-81, 1883-86, 1888-90, 1892-97, 1899-1900 and 1921 onwards are at present available at the Book Depôt and will be supplied on receipt of the price and other incidental charges mentioned below :—

From 1876 to 1921 Rs. 10 without postage, Rs. 12-12 with Inland postage per year.

From 1922 onwards Rs. 12 without postage, Rs. 15 with Inland postage per year.

A packing charge of annas 2 per volume (minimum charge annas 4) is made when the reports are charged at the without-postage-rate and have to be sent by unpaid railway parcel.

Inquiries for the Indian Law Reports (other than the Calcutta series) for 1876 to 1900 and 1921 onwards should be addressed to the publisher of the series concerned.

B. C. MUKHARJI, Officer in charge,

Book Depôt, Bengal Secretariat.

CALCUTTA, the 14th August 1924.

Imperial Library.

(Secretariat Buildings, 6, Esplanade East, Calcutta)
Open on—

Weekdays and Saturdays from 10 A.M. to 7 P.M.
Sundays and Gazetted holidays from 2 P.M. to 5 P.M.

THE Imperial Library is also a Lending Library. It is free to all except children. There is no subscription to pay.

K. M. ASADULLAH, Librarian.

Descriptive Catalogue of Sanskrit Manuscripts.

PARTS I, II and III of a Descriptive Catalogue of the Sanskrit Manuscripts in the Library of the Calcutta Sanskrit College, prepared by Pandit Hrishikesh Sastri and Babu Siva Chandra Gui, M.A., B.L., of that College, are offered to the public for sale. The Catalogue having to be completed in 23 parts the price of each part is 12 annas a copy exclusive of postage. Copies can be obtained from the Principal of the Sanskrit College, Calcutta.

GOVERNMENT OF BENGAL.

FINANCE DEPARTMENT.

Miscellaneous.

Calcutta, the 20th October 1927.

NOTICE.

IN supersession of the orders issued in notice, dated the 10th June 1922, published in the *Calcutta Gazette*, dated the 14th June 1922, the following revised rates have been fixed for the *Calcutta Gazette* and its parts with effect from the date of this notice This will not, however, affect the subscriptions already paid at previous rates until they have expired :—

	With postage. Rs.	Rs.	A.
Per annum—			
Entire	31	37	8
Part I	8	10	0
Part IA	2	3	0
Part IB	5	7	0
Part II	5	7	0
Parts III and IV together, or any one of them	1	1	8
Parts V and VI together, or any one of them..	2	3	0
Bengal Library Catalogue ..	2	3	0
Jury Lists .. .	3	4	0
Supplement	7	9	0

	Postage according to weight. Rs.	A.
Per issue—		
Entire Gazette (excluding Bengal Library Catalogue and Jury Lists).. ..	0	12
Part I	0	4
Part IA	0	2
Part IB	0	4
Part II	0	4
Parts III and IV together, or any one of them	0	2
Parts V and VI together, or any one of them	0	2
Bengal Library Catalogue	0	8
Jury Lists	1	0
Supplement	0	4

2. This will not affect the orders relating to specially heavy issues, issued in Notice No. 1874 Mis., dated the 22nd August 1923, published in the *Calcutta Gazette*, dated the 29th August 1923.

J. A. WOODHEAD,
Secretary to the Government of Bengal.

CINCHONA FACTORY PRODUCTS.

By order of the Government of Bengal Cinchona Factory Products as manufactured and packed at the Cinchona Factory, Mungpoo, Darjeeling district, will be sold and distributed by the **Superintendent, Presidency Jail,** *in original packages* as received from the Mungpoo Factory at the rates noted below **from the 1st May 1928** :—

Quinine Sulphate.

For 60 lbs. and upwards at a time .. Rs. 18 per lb.
For 6 lbs and over but less than 60 lbs. at a time .. .. .. „ 19 „
For any quantity less than 6 lbs. .. „ 20 „

Quinine Hydrochloride.

For 60 lbs and upwards at a time .. Rs 23 per lb
For 6 lbs and over but less than 60 lbs. at a time .. .. .. „ 24 „
For any quantity less than 6 lbs. .. „ 25 „

Quinine Di-Hydrochlor.

For 60 lbs and upwards at a time .. Rs. 25 per lb.
For 6 lbs and over but less than 60 lbs. at a time .. . .. „ 26 „
For any quantity less than 6 lbs. .. „ 27 „

Quinidine Sulphate.

For 60 lbs. and upwards at a time . Rs. 20 per lb
For 6 lbs. and over but less than 60 lbs. at a time .. .. .. „ 21 „
For any quantity less than 6 lbs. .. „ 22 „

Cinchonidine Sulphate.

For 60 lbs. and upwards at a time .. Rs. 25 per lb.
For 6 lbs. and over but less than 60 lbs. at a time .. .. .. „ 26 „
For any quantity less than 6 lbs. .. „ 27 „

Cinchonine Sulphate.

For 60 lbs and upwards at a time .. Rs. 12 per lb.
For 6 lbs. and over but less than 60 lbs. at a time .. .. .. „ 13 „
For any quantity less than 6 lbs. .. „ 14 „

Cinchona Febrifuge (Powder).

For 6 lbs. and over at a time .. Rs. 9 per lb.
For any quantity less than 6 lbs. . „ 10 „

Cinchona Febrifuge (Tablets).

For 6 lbs. and over at a time .. Rs. 10 per lb
For any quantity less than 6 lbs. .. „ 11 „

Quinoidine (Tablets).

For 6 lbs. and over at a time .. Rs. 5 per lb.
For any quantity less than 6 lbs. „ 6 „

Quinoidine (in Mass).

For 6 lbs. and over at a time .. Rs. 4 per lb.
For any quantity less than 6 lbs. . „ 5 „

Cinchona Bark (in 50 pound original bags).

Per bag .. .. .. Rs 25.

Transit charges extra in every case.

Quinine Sulphate is for sale to Government Institutions and Missionaries only. It is not for sale to Private Firms or the General Public.

Cinchona Febrifuge in Powder and Tablet form (when in stock) is for sale to Government Institutions, Missionaries and the General Public.

Quinine Sulphate will be supplied to Hospitals and Dispensaries of this Presidency only at the wholesale rate of Rs. 18 per lb., irrespective of quantities. For all other purchasers the rates given above will apply.

Provinces other than Bengal, Bihar and Orissa and Assam will get their supplies of Sulph. Quinine from the Director, Botanical Survey of India, Sibpur, Howrah.

Local sale at the jail gate from 2 to 4 p.m.

The system of payment is by—*Cash in advance*—by "*Treasury Chalans*," which should accompany the order or indent.

In cases where this is not possible, payment should be made by "*Remittance Transfer Receipts*" or crossed "*Cheques.*"

Indents unaccompanied by cash in advance will be sent Value Payable Post. Credit sale is not allowed except under special circumstances.

In the case of *Government officers* payment will be recovered by *Book Transfer, i.e., Countersigned Invoices* in the event of *Cash* not accompanying the indent by "*Treasury Chalans*," *Remittance Transfer Receipts* or *Cheque.*

2. Price and postage must accompany the price of the drug (when the drug is required by post).

3. The name of the Railway and Steamer Station or Post Office must be written distinctly when the parcels are required by Rail, Steamer or Post. *Railway parcels are sent by passenger train only.*

4. A scale of postage is given below :—

For ¼ lb. 4 annas, ½ lb. 5 annas, 1 lb. 8 annas, 1½ lbs. 11 annas, 2 lbs. 14 annas, 2½ lbs. Re. 1-1, 3 lbs. Re. 1-4, 3½ lbs. Re. 1-4, 4 lbs. Re. 1-7, 5 lbs. Re. 1-13, 5½ lbs. Re. 1-13, 6 lbs. Rs. 2.

Two different drugs are not packed in the same parcel and postage must be paid separately for each kind.

N.B.—Postage stamps are not accepted as revenue.

Government reserve the right to alter the price without notice.

The Calcutta Gazette

THURSDAY, AUGUST 6, 1931.

Part IV

Bills introduced in the Bengal Legislative Council, Reports of Select Committees presented or to be presented to that Council, and Bills published before introduction in that Council.

GOVERNMENT OF BENGAL.

Legislative Department.

NOTIFICATION.

No. 2305 L.—27th July, 1931.—In pursuance of the provision of rule 20 of the Bengal Legislative Council Rules, 1920, the following Bill which was introduced in the Bengal Legislative Council on the 23rd July, 1931, is hereby published for general information together with the Statement of Objects and Reasons annexed thereto:—

THE GARDEN REACH MUNICIPALITY BILL, 1931.

A

BILL

to provide for the exclusion of the Garden Reach area from the limits of the Corporation of Calcutta and to reconstitute the Garden Reach Municipality as a Municipality under the Bengal Municipal Act, 1884.

Preamble.

WHEREAS it is expedient to provide for the exclusion of the Garden Reach area from the limits of the Corporation of Calcutta and to reconstitute the Garden Reach Municipality as a Municipality under the Bengal Municipal Act, 1884 ;

It is hereby enacted as follows :—

Short title.

1. This Act may be called the Garden Reach Municipality Act, 1931.

Definitions.

2. In this Act, unless there is anything repugnant in the subject or context,—

" Garden Reach area " means the area which formed the Garden Reach Municipality at the time of the commencement of the Calcutta Municipal Act, 1923 excluding such portions of that area as had then been or have up to the commencement of this Act been acquired by the Commissioners for the Port of Calcutta for the construction of King George's Dock and the works in connection therewith.

" Garden Reach Municipality " means the new Garden Reach Municipality constituted under the provisions of section 8.

" Former Garden Reach Municipality " means the Municipality known as the Garden Reach Municipality as it existed at the commencement of the Calcutta Municipal Act, 1923.

Appointment of Committee.

3. (*1*) Within two months from the commencement of this Act or such longer period as may be necessitated by the occurrence of the contingency provided for in sub-section (*3*) the Local Government shall appoint a Committee to report on all matters incidental to the exclusion of the Garden Reach area from the limits of the Corporation of Calcutta and its reconstitution as a Municipality under the Bengal Municipal Act, 1884.

(*2*) The Committee shall consist of seven members, namely :—

(*a*) two members representing the Garden Reach area to be nominated by the Local Government,

(*b*) two members to be elected by the Corporation of Calcutta from among the Councillors and Aldermen other than those representing the Garden Reach Ward,

(*c*) three members to be nominated by the Local Government.

(*3*) If within the two months referred to in sub-section (*1*) the Corporation of Calcutta fails to elect the members referred to in clause (*b*) of sub-section (*2*) the Local Government shall nominate two members from among the persons specified in clause (*b*) of sub-section (*2*).

(*4*) The Local Government shall appoint one of the members to be the Chairman of the Committee, and shall publish the names of the Chairman and the members in the *Calcutta Gazette*.

The Garden Reach Municipality Bill, 1931.

(*Clauses 4—7.*)

(*5*) If a member dies, resigns, refuses to act or becomes incapable of acting the authority which nominated or elected him shall, as the case may be, nominate or elect a successor.

(*6*) If within one month from the occurrence of a vacancy under sub-section (*5*) the Corporation of Calcutta fails to elect a successor the Local Government shall nominate such successor in the manner provided in sub-section (*3*).

(*7*) The first meeting of the Committee shall be convened by the Chairman within two weeks from the publication referred to in sub-section (*4*).

(*8*) The presence of four members shall be necessary to constitute a meeting of the Committee, and the time and place of meeting and the procedure to be followed by the Committee shall be as determined by the Committee.

Power of Committee to call for information.

4. The Corporation of Calcutta, and its officers, shall comply with all requests made by the Committee referred to in section 3 for the supply of information or documents.

Charges incurred by Committee.

5. The Corporation of Calcutta shall defray all charges incurred by the Committee appointed under section 3 in the preparation of their report, whether in respect of establishment or otherwise.

Function of Committee.

6. Without prejudice to the generality of the functions assigned to the Committee by sub-section (*1*) of section 3, the Committee shall report on the following matters in particular, namely :—

(*a*) the adjustment of finances between the Corporation of Calcutta and the Garden Reach Municipality and the provision of initial funds for the said Municipality ;

(*b*) the terms on which liability for such portions of the loans raised by the Corporation of Calcutta as can be shown to have been incurred solely for the benefit of Garden Reach area shall be adjusted between the Corporation of Calcutta and the Garden Reach Municipality ;

(*c*) the arrangements to be made for water supply to the Garden Reach Municipality and the maximum rate which the Corporation of Calcutta may demand for water supplied by the Corporation ;

(*d*) the liability of the Garden Reach Municipality in respect of such portions of contracts, other than the contracts solely affecting the Garden Reach area referred to in sub-section (*4*) of section 9 as may relate solely to the benefit of the Garden Reach area ;

(*e*) the extent to and the conditions under which the Garden Reach Municipality shall continue in employment such staff of the Corporation of Calcutta as is employed by the Corporation in respect of the Garden Reach area, and the compensation to be paid by the Corporation to any employees discharged in consequence of the exclusion of the Garden Reach area ;

(*f*) the apportionment of arrears due to the Corporation of Calcutta, other than those on account of rates, taxes and fees, between the Garden Reach Municipality and the Corporation of Calcutta.

Report of Committee and orders by Local Government thereon.

7. (*1*) The Committee shall submit its report to the Local Government within six months, or such further period as the Local Government may appoint, from the date of its first meeting.

(*2*) On receipt of the report the Local Government shall issue orders in accordance therewith, with such modifications only as may be necessary to reconcile inconsistencies in the report itself, or to reconcile the report with existing law or with this Act or to meet unforeseen contingencies ;

The Garden Reach Municipality Bill, 1931.

(Clauses 8—10.)

Provided that the Local Government may for the same purpose subsequently amend any orders so issued.

(3) The Local Government shall publish the report and the orders issued thereon in the *Calcutta Gazette*.

(4) All orders of the Local Government made under sub-section (2) shall subject to the provisions of section 9 have effect as if enacted in this Act.

Constitution of Garden Reach Municipality.

8. Notwithstanding anything contained in sub-section (2) of section 2 of the Calcutta Municipal Act, 1923, or in section 8 of the Bengal Municipal Act, 1884, the Local Government may, by notification in the *Calcutta Gazette*, constitute the Garden Reach area as a Municipality for the purposes of the Bengal Municipal Act, 1884, with effect from such date as may be specified in the notification and thereupon the Bengal Municipal Act, 1884, shall notwithstanding the provisions of sub-section (2) of section 2 of the Calcutta Municipal Act, 1923, be deemed to be re-enacted and in force in the said area from such date.

Such notification shall specify the boundaries of the said Municipality, and the number of the Commissioners, and shall further specify whether the name of the Municipality shall or shall not be included in the first or second schedule of the Bengal Municipal Act, 1884.

First election of Commissioners.

9. (1) For the purpose of the first election of Commissioners of the Garden Reach Municipality, the electoral roll of the Municipality shall be that portion of the current electoral roll of the Corporation of Calcutta which relates to the Garden Reach area excepting the names of female voters contained therein.

(2) The Local Government shall make such orders as it thinks fit in respect of the division of the Municipality into wards, the number of Commissioners to be elected for each ward, the mode of election, and the authority who shall decide disputes thereunder.

(3) If any difficulty arises as to the preparation or publication of the first electoral rolls or the holding of the first elections the Local Government may by order authorise any matter or thing to be done which appears to it necessary for the proper preparation or publication of the rolls or for the proper holding of the elections.

Consequences of constitution of Garden Reach Municipality.

10. On the publication of the notification referred to in section 8 the following consequences shall ensue, namely :—

On and from the date specified in the said notification as the date of the constitution of the Garden Reach area as a Municipality—

(1) The orders of the Local Government made under sub-section (2) of section 7 shall commence to have effect.

(2) All property movable and immovable in Garden Reach area and all interests of whatever nature therein vested in the Corporation of Calcutta shall vest in the Commissioners of the Garden Reach Municipality.

(3) All valuations made, rates and taxes imposed and all fees levied by the Corporation of Calcutta in respect of the Garden Reach area under Part IV of the Calcutta Municipal Act, 1923, shall be deemed to be cancelled and all rates, taxes, fees and tolls subsisting in that area at the commencement of the Calcutta Municipal Act, 1923, shall so far as may be, be restored and deemed to have been duly imposed under the Bengal Municipal Act, 1884 and such rate, tax, fee or toll shall continue to be levied accordingly until the Commissioners of the Garden Reach Municipality at meeting, with the sanction of the Local Government, shall otherwise direct.

The Garden Reach Municipality Bill, 1931.

(Clauses 11—15.)

(*d*) All rights and liabilities attaching to the Corporation of Calcutta from contracts, agreements or leases, to which the Corporation of Calcutta is a party in respect of and solely affecting the Garden Reach area shall vest in the Commissioners of the Garden Reach Municipality.

Saving of power to recover arrears of taxes.

11. Notwithstanding anything contained in this or any other Act the Corporation of Calcutta shall, for a period of three years from the date of constitution of the municipality by the notification referred to in section 8, be entitled to recover all arrears of rates, taxes and fees due from the Garden Reach area at the time when the Garden Reach Municipality is constituted and shall for the purpose have and exercise all the powers in this behalf conferred upon it by the Calcutta Municipal Act, 1923.

Restoration to Garden Reach Municipality of movable property and records.

12. The Corporation of Calcutta shall make over to the Garden Reach Municipality all furniture, records, movable property and other assets of the former Garden Reach Municipality remaining in the possession of the Corporation, and shall likewise make over all documents and records relating to the Garden Reach area which have come into existence since the commencement of the Calcutta Municipal Act, 1923.

Power to adopt or alter Acts and orders of Corporation of Calcutta

13. Subject to the provisions of the Bengal Municipal Act, 1884, it shall be competent for the Commissioners of the Garden Reach Municipality to adopt, amend, vary or rescind anything done, or order made by the Corporation of Calcutta in respect of the Garden Reach area.

Duty of Commissioners to execute original improvement works

14. Notwithstanding anything contained in part III of the Bengal Municipal Act, 1884, or elsewhere in that Act, the Commissioners of the Garden Reach Municipality shall annually reserve the sum of one lakh of rupees out of the sum of rupees two lakhs to be received annually from the Corporation of Calcutta under section 90A of the Calcutta Municipal Act, 1923, for expenditure on new works of improvement in the Garden Reach Municipality approved by the Local Government, and meeting of loans charges for such works.

Amendment of Calcutta Municipal Act, 1923.

15. With effect from the date when the Garden Reach Municipality is constituted under section 8, the Calcutta Municipal Act, 1923, shall be amended in the manner set forth in the schedule.

The Garden Reach Municipality Bill, 1931.

(The Schedule.)

THE SCHEDULE.

(Amendments to be made in the Calcutta Municipal Act, 1923.)

[*See* section 15.]

1. In section 3 in sub-clause (*iii*) of clause (*l*) for the words "the Garden Reach Municipality" the following shall be substituted, namely :—

> "That area within the limits of the Garden Reach Municipality as constituted at the commencement of this Act which had been acquired prior to the commencement of the Garden Reach Municipality Act, 1931, by the Commissioners for the Port of Calcutta for the construction of King George's Dock and the works in connection therewith."

2. In section 5 in clause (*a*) for the word "seventy-five" the word "seventy-one" shall be substituted.

3. In section 6 between the words "the Commissioners of the Maniktala, Cossipur-Chitpur, or Garden Reach municipalities" and the words "shall be deemed" the words "in respect of the area added to Calcutta" shall be inserted.

4. In section 7 for the words "or by the Commissioners of the Maniktala or Cossipur-Chitpur or Garden Reach Municipalities" the following shall be substituted, namely :—

> "or by the Commissioners of the Maniktala or Cossipur-Chitpur Municipalities or by the Commissioners of the Garden Reach Municipality in respect of the area described in sub-clause (*iii*) of clause (*l*) of section 3."

5. In section 90—

(*l*) after the words "before the commencement of this Act" the word "and" shall be inserted, and

(*2*) the words "and a sum of not less than a lakh of rupees on the execution of original improvement works within the area which formed the Garden Reach Municipality at the commencement of this Act" shall be omitted.

6. After section 90 the following section shall be inserted, namely :—

> "90A. The Corporation shall beginning from 1st day of April 1932 pay annually for thirty years a sum of two lakhs of rupees to the Garden Reach Municipality as constituted by the Garden Reach Municipality Act, 1931."

7. In section 242 in clause (*a*) of sub-section (*l*), in the list of municipalities, after the word "Baranagar," the words "Garden Reach" shall be inserted.

The Garden Reach Municipality Bill, 1931.

(The Schedule.)

8. In Schedule I under the heading "Boundaries," for the words "thence along the eastern boundary of Diamond Harbour Road.....and thence westward along the Government embankment till it meets the River Hooghly" the following shall be substituted, namely :—

"thence along the eastern boundary of Diamond Harbour Road to the point where it meets the southern boundary of the Port Commissioners' land above referred to ; thence along the southern, western and northern boundary of the said land up to the point where it meets the Circular Garden Reach Road at its junction with New Taratala Diversion Road , thence eastward along the northern edge of Circular Garden Reach Road to the point where it meets the Port Commissioners' land above referred to ; thence northward along the western boundary of this land to the point where it meets Garden Reach Road ; thence westward along the northern edge of Garden Reach Road to the point where it meets Prince Delwarjah Lane ; thence northward along the eastern edge of Prince Delwarjah Lane and the western boundary of the Port Commissioners' land above referred to to the point where it meets the river Hooghly."

Amendment of Schedule III.

9. In Schedule III all the entries relating to "Garden Reach" shall be omitted.

Amendment of Schedule IV.

10. In Schedule IV under the sub-heading "A. Non-Muhammadan Constituencies" all the entries relating to Garden Reach shall be omitted, and under the sub-heading "B. Muhammadan Constituencies" the following shall be omitted, namely :—

"Muhammadan Constituency No. VII—Garden Reach, Ward No. 26 Two."

Amendment of Schedule VII.

11 In Schedule VII all the entries relating to Ward No. 26 (Garden Reach) shall be omitted.

STATEMENT OF OBJECTS AND REASONS.

A committee was appointed in 1930 to advise on complaints by ratepayers of Garden Reach arising out of the enhancement of rates consequent on the inclusion of Garden Reach in Calcutta municipal area. This committee made several recommendations for the alleviation of their position and proposed that the Calcutta Improvement Trust should carry out improvements in Garden Reach with the assistance of a grant from the Calcutta Corporation, and if necessary from Government. On careful examination of the financial proposals as affecting the Calcutta Improvement Trust it was apparent that the Trust would be unable to undertake this extension of their activities without a recurring grant from Government which in the present financial circumstances it is impossible for Government to make. At the same time it appears that the position reported on by the committee can be remedied without detaching from Calcutta the Dock area in Garden Reach which forms an integral part of the City of Calcutta in its wider aspect. In these circumstances, Government have decided to legislate for the separation of the Garden Reach Municipality excluding the Dock area and restoring it to the position of an independent municipality under the Bengal Municipal Act which it lost on the passing of the Calcutta Municipal Act in 1923.

It is clear that such a municipality would not, with its normal resources under the Bengal Municipal Act, be in a financial position to conduct its normal activities, or to undertake capital improvements without assistance ; while at the same time the fact that the Calcutta Corporation will derive increased revenue from the Dock area which on the basis of geographical considerations would normally go to the Garden Reach Municipality justifies the payment of a grant by the Calcutta Corporation to Garden Reach. The Bill therefore provides for the grant of Rs. 2 lakhs per annum for a period of 30 years by the Corporation to Garden Reach. At the same time the liability of the Corporation to expend one lakh per annum on capital works in the Garden Reach area comes to an end as all provisions involved in the inclusion of Garden Reach in the Calcutta municipal area in the Act of 1923 are repealed.

B. P. SINGH ROY,

Minister-in-charge.

The 12th July, 1931.

J. BARTLEY,

Secy. to the Bengal Legis. Council.

Registered No. C207 *No. 32 of 1931*

The Calcutta Gazette

THURSDAY, AUGUST 6, 1931.

CONTENTS:

	PAGE.
Forecast of the Summer *Til* Crop of Bengal, 1931-32	1011—1013
Statement under the Cotton Ginning and Pressing Factories Act, 1925 ..	1014
Statement of donations and endowments in the districts of the Burdwan Division, 1930-31	1014
Weather and Crop Report for the week ending 29th July 1931	1015—1018
Statement showing the daily gauge-readings of certain rivers for the week ending 23rd July 1931	1019—1025
Statements of weekly gauge readings of certain rivers in Bengal	1026—1027
Vital Statistics for the towns of Bengal for the week ending 25th July 1931 ..	1028
Resolution on the Report on the Police Administration in the Bengal Presidency for the year 1930	1029—1032

Supplement.

Official Papers.

DEPARTMENT OF AGRICULTURE, BENGAL.

Dacca, the 27th July 1931.

Forecast of the Summer Til Crop of Bengal, 1931-32.

(NOTE.—On an average of the five years ending 1929-30, the area under til in Bengal has represented some 2·6 per cent. of the total area under til in British India.)

Character of the season.—In February the rainfall was above the normal while in March it was generally in defect. Preparatory tillage and sowings commenced under favourable conditions, but subsequently occasional drought and heavy rain affected the germination and growth and caused some damage in the districts of Mymensingh, Pabna and Dacca. On the whole, the season was a fair one for the crop this year.

Acreage.—The area sown this year is reported to be 111,700 acres as against 99,300 acres last year or an increase of about 12 per cent. over last year.

Outturn.—From the District Officers' estimates the average outturn of the crop for the Province works out at 70 per cent. of the normal this year as against 73 per cent. last year.

Taking the normal yield as 6 maunds per acre, the gross outturn of the crop for the Province is estimated at about 17,200 tons this year as against 16,000 tons last year or an increase of about 7 per cent. over last year.

J. C. ROY,

for *Director of Agriculture, Bengal.*

APPENDIX I.

Forecast of the Summer Til Crop of Bengal, 1931-32.

District.	Estimated normal area under summer til.	Estimated area under summer til.		Taking 100 to represent the normal, what would be the average outturn per acre cropped.		Date by which sowing generally began this year and whether that date was early, normal or late.	Date by which harvesting generally commenced this year and whether that date was early, normal or late.	Remarks by District Officers.
		Last year.	This year.	Last year.	This year.			
1	2	3	4	5	6	7	8	9
	Acres.	Acres.	Acres.					
24-Parganas ..	100	(30)	(40)	..	..	....	....	....
Nadia ..	100*	300	300	67	67	Early part of March. Normal.	June. Normal	Owing to heavy rains at sowing time, the outturn is anticipated to fall much below the normal.
Murshidabad ..	2,400	1,600	1,700	42	42	End of March. Normal.	End of June. Normal.	The weather was not favourable. The outturn is below the normal owing to damage caused by occasional drought.
Jessore ..	900*	900	800	66	64	March. Normal	June. Normal	The outturn is anticipated to be below the normal owing to insufficient rainfall at the time of growth.
Khulna ..	1,000	1,000	1,000	92	92	First week of March. Normal.	First week of June. Normal.	The weather was favourable. The outturn is anticipated to fall a little below the normal owing to want of timely rain.
Burdwan ..	900	400	400	92	92	Middle of March. Normal.	Ditto ..	The weather was favourable.
Birbhum ..	500	500	700	67	75	Middle of February to beginning of March. Normal.	June. Normal	The increase in area is due to rain during the sowing season. The weather was favourable but the crop was damaged to some extent by hails and insect pests.
Bankura ..	2,700	3,000	2,800	83	100	Middle of February. Normal.	Beginning of June. Normal.	The slight decrease in area is due to excessive rainfall during the sowing time. The weather was favourable.
Midnapore ..	7,500	1,300	1,200	83	67	March. Normal.	June. Normal	The weather was not favourable. The fall in outturn is due to scarcity of rain at sowing time.
Hooghly ..	400	300	300	58	58	First week of March. Normal.	Beginning of June. Normal.	The weather was favourable at sowing time but unfavourable afterwards owing to want of rain which caused damage to the extent of five annas.
Rajshahi ..	6,400*	5,500	9,200	58	79	February. Normal.	June. Normal	The decrease in area compared with the normal is due to want of timely rain which also affected the growth and outturn.
Dinajpur ..	200	300	300	75	83	Middle of May. Normal.	Latter part of July. Normal.	The outturn is below the normal owing to want of adequate rainfall.
Rangpur ..	200	200	200	100	100	By the end of February. Normal.	Middle of June, Normal.	The weather was favourable.
Bogra ..	900	1,000	1,500	67	70	Early in March. Normal.	June. Normal	The increase in area is due to extension of cultivation owing to reduction in jute cultivation. The weather was not favourable.
Pabna ..	28,000*	22,000	23,500	83	75	Beginning of February. Normal.	Beginning of June. Normal	The weather was not favourable at sowing time but subsequently drought and heavy rain damaged the crop to the extent of three annas.

* Revised.

District.	Estimated normal area under summer til.	Estimated area under summer til.		Taking 100 to represent the normal, what would be the average outturn per acre cropped.		Date by which sowing generally began this year and whether that date was early, normal or late.	Date by which harvesting generally commenced this year and whether that date was early, normal or late.	Remarks by District Officers.
		Last year.	This year	Last year.	This year.			
1	2	3	4	5	6	7	8	9
	Acres	Acres.	Acres					
Dacca ..	12,100	11,900	14,800	60	52	March. Normal	May and June. Normal.	The increase in area is due to low price of jute The weather was not favourable. Occasional drought and sudden rise of water affected the growth of the crop.
Mymensingh ..	44,400	31,700	31,700	75	67	Last part of March.	Middle of June Normal.	Heavy rains and storm during the flowering time affected the yield.
Faridpur ..	8,500	7,200	7,300	84	80	First part of February.	Beginning of June.	The weather was favourable at sowing time but later on occasionally excessive rains and early rise of water level caused damage to the extent of four annas.
Bakarganj ..	6,500*	6,000	6,000	58	50	February and March. Normal.	June. Normal	The weather was favourable at sowing time but excessive rain in May damaged the crop appreciably.
Chittagong ..	200	200	200	90	100	January to March Normal.	June. Normal	The weather was favourable, on the whole.
Tippera ..	3,800	3,100	6,800	67	92	March. Normal	May ..	The increase in area is due to less cultivation of jute The weather was favourable, on the whole. Occasional rain at sowing time and afterwards helped the growth of the crop though heavy rains in May caused slight damage.
Noakhali ..	1,300*	900	1,000	50	50	April ..	June. Normal	The weather was fair, on the whole.
Total Bengal ..	129,000	99,300	111,700	73	70			

* Revised.

APPENDIX II.

Abstract statement of estimated acreage and outturn of the Summer Til Crop of Bengal, 1931-32.

Province.	Area (in acres).							Yield (in tons).						
	Of current year's crop.	Of previous year's crop.	Average of preceding—		Percentage by which column 2 exceeds (+) or is less than (−) area in			Estimated yield of current year, i.e., of area in column 2.	Yield of previous year, i.e., of area in column 3.	Average of preceding—		Percentage by which column 7 exceeds (+) or is less than (−) yield in		
					column 3.	column 4.						column 8.	column 9.	
1	2	3	4		5	6		7	8	9		10	11	
			Five years.	Ten years.		Five years.	Ten years.			Five years.	Ten years.		Five years.	Ten years.
Bengal ..	111,700	99,300	104,600	117,200	+12	+7	−5	17,200	16,000	15,600	17,800	+7	+10	−3

FORM C—BENGAL.

STATEMENT OF COTTON PRESSED IN THE BENGAL PRESIDENCY FOR THE WEEK ENDING 24th JULY 1931.

[Section 5 (2) of the Cotton Ginning and Pressing Factories Act, 1925.]

Name of Division or block.	Number of bales pressed.				District included in the block.
	During the week.	During the corresponding week, last year.	Since 1st September 1930 (the date prescribed by the Local Government as the commencement of the season).	During the corresponding period, last year.	
The Bengal Presidency	564 or 558·86 bales of 400 lbs. each.	499	32,534	31,433	All districts in the Presidency.

J. B. McBRIDE,
Chief Inspector of Factories, Bengal (offg.).

Statement showing the donations and endowments over Rs. 1,000 and up to Rs. 5,000 made by private individuals of the Burdwan Division for public purposes which have been acknowledged by the Commissioner of the Burdwan Division during the year 1930-31.

Division.	District.	Name of donor.	Purpose of donation or endowments.	Amount of donation or endowments.	Total of district.	Total of Division.
1	2	3	4	5	6	7
				Rs.	Rs.	Rs.
Burdwan ..	Hooghly	Babu Brahmachari Kalikananda of Muthadanga.	For the construction of the Muthadanga Ramkrishna H. E. School building.	2,100	....	....
		Babu Upendra Nath Nandy of Batanal.	For the construction of the Batanal Union H. E. School building.	2,100	....	....
		Babu Tripura Charan Paul of Nutangram.	For the maintenance of the Bhangamora Nutangram Cinna Memorial H. E. School building.	Made a gift of ¼th of his landed property fetching an annual income of Rs. 3,500 on execution of a deed of gift duly registered.	....	....

Chinsura, the 29th July 1931.

H. C. SEN, for *Commissioner.*

DISTRICT REPORTS ON WEATHER AND CROPS.

For the week ending on the 29th July 1931.

Summary.—During the week the rainfall was heavy in North and in parts of East Bengal while elsewhere the fall was generally light to moderate. Transplantation of winter paddy seedlings and harvesting of autumn paddy and jute are progressing but in parts of North Bengal heavy rain is retarding the operations Condition of standing crops is not satisfactory in North Bengal owing to excessive rain. Distress continues in parts of Nadia, Murshidabad, Dinajpur, Pabna and Bogra, the number of persons attending the test relief works in the different centres of these districts being 1,964, 3,486, 1,206, 2,648 and 120 respectively. The number of persons gratuitously relieved at Bogra was 6. In Rangpur none attended the test relief works. The average price of common rice for the Province has risen by about 0·42 per cent. as compared with that of the previous week.

Serial No.	District and subdivision.	Rainfall.	Price of common rice, in seers, per rupee.		Character of the weather, condition of crops, etc.
			This week.	Previous week.	
1	2	3	4	5	6
		Inches.			
1	24-Parganas ..	0·51	10	9 11/16	Weather seasonable. Fodder and water are sufficient. Condition of jute plants is healthy except in Barrackpore. No damage anywhere except in Barrackpore. Height of jute plants is 7 feet in Barrackpore, 9½ feet in Baraset, 6½ feet in Basirhat and 4½ feet in Diamond Harbour subdivisions. Steeping water is ample except in Barrackpore and Diamond Harbour. No record of river level.
	Diamond Harbour.	0·77	10½	10½	
	Barrackpore ..	2·77	8½	8½	
	Baraset ..	1·97	9	9	
	Basirhat ..	1·83	9	9	
2	Nadia ..	0·78	9½	9½	Weather seasonable. 1,964 persons attended test works during the week ending on the 25th July. Condition of jute plants is healthy and growth is satisfactory. No damage. Steeping water is sufficient except in Meherpur subdivision. Height of plants is 2½ to 4 cubits. Height of river is the same as last year. Rainfall normal. Harvesting of jute has not yet commenced.
	Kushtia ..	0·74	10	10	
	Meherpur ..	4·58	8 13/16	8 13/16	
	Chuadanga ..	2·06	10	10	
	Ranaghat ..	1·54	10	10	
3	Murshidabad ..	5·69	11	11	Weather seasonable. Prospects of crops are favourable. Fodder and water are sufficient. Cattle disease is reported from thanas Suti, Sagardighi and Raghunathganj in Jangipur subdivision. 3,486 persons attended test works in Jellingi police-station during the week ending on 25th July. Condition of jute is healthy. No damage. Steeping water is sufficient. Height of jute plant is 3 to 6 feet. Height of rivers is normal. Rainfall moderate. Harvesting of jute has not yet commenced.
	Lalbagh ..	1·43	10½	10½	
	Jangipur ..	5·69	10½	10½	
	Kandi ..	1·49	12	12	
4	Jessore ..	2·54	9	9⅜	Weather seasonable. Prospects of standing crops are good. Jute plants are healthy. No damage. Steeping water is not sufficient. Height of jute plants is five feet. Height of rivers is lower than last year. Rainfall seasonable. Harvesting of jute has not commenced. Fodder and water are sufficient.
	Jhenidah ..	3·74	10	10	
	Magura ..	4·45	9	9	
	Narail ..	(n)	(n)	9½	
	Bongaon ..	9·50	9½	9½	
5	Khulna ..	1·49	10½	10½	Weather seasonable; its effects on crops are fair. Fodder and water are sufficient. Export and import of rice continue slowly. Cattle-disease is reported from Kaliganj, Syamnagore and Assasuni thanas. Growth of jute is good. No damage. Steeping water is sufficient. Height of jute plants is 4½ feet to 5 feet. Rainfall is moderate. Harvesting has not commenced. Height of river is 0·03 feet higher.
	Satkhira ..	1·43	9½	9⅞	
	Bagerhat ..	4·88	8½	8½	

(n) Not reported.

Serial No.	District and subdivision.	Rainfall.	Price of common rice, in seers, per rupee.		Character of the weather, condition of crops, etc.
			This week.	Previous week.	
1	2	3	4	5	6
		Inches.			
6	Burdwan ..	1·37	10	10	Weather seasonable. Fodder and water are sufficient. Condition of jute plants is healthy. No damage. Steeping water is ample. Height of jute plant is 3 feet. River level is normal. Rainfall is normal. Harvesting of jute has not commenced.
	Asansol ..	2·98	9	9	
	Katwa ..	8·95	11	11	
	Kalna ..	2·57	11	11	
7	Birbhum ..	1·85	13	13	Weather hot and cloudy. Fodder and water are sufficient.
	Rampurhat ..	3·47	11½	12	
8	Bankura ..	2·86	11	10¾	Weather hot and cloudy. Prospects of standing crops are fair. Fodder and water are sufficient.
	Vishnupur ..	2·58	11¼	11¾	
9	Midnapore ..	4·17	13½	13 7/16	Weather seasonable. Fodder and water are sufficient. Cattle-disease is reported from Midnapur. Height of jute plants is 6 feet.
	Contai ..	1·09	12	12	
	Tamluk ..	*nil*	10	10	
	Ghatal ..	2·06	12½	12½	
	Jhargram ..	1·08	11¾	11¾	
10	Hooghly ..	3·20	9	10	Weather seasonable. Fodder is sufficient. Growth of jute is satisfactory. Height of jute plants is 3 to 5½ feet. No damage. Harvesting has not commenced. Steeping water is ample. Height of river is the same as last year. Rainfall moderate.
	Serampore ..	2·16	9¾	10	
	Arambagh ..	0·73	12½	(*n*)	
11	Howrah ..	1·11	8	8	Weather seasonable and its effects on jute crop are favourable. No import or export. Fodder and water are sufficient. Jute plant is healthy. No damage. Steeping water is ample. Height of jute plants is 4 feet. Height of river is lower.
	Uluberia ..	3·25	9¾	10¾	
12	Rajshahi (Rampur-Boalia).	(*n*)	10½	11¼	Weather seasonable. Growth of jute is satisfactory. No damage. Steeping water is sufficient. Height of jute plants is about 4 cubits. Height of rivers is the same as last year. Harvesting of jute has commenced.
	Naogaon ..	2·93	12	(*n*)	
	Nator ..	3·49	9¾	9¾	
13	Dinajpur ..	6·70	10	10½	Weather seasonable and cloudy; its effects on agricultural operations are favourable. Prospects of standing crops are fair. Fodder and water are sufficient. Cattle-disease is reported from Dhamoirhat police-station. Condition of jute plants is not so healthy. Growth is fair. No damage. Steeping water is sufficient. Harvesting has just commenced. Number of persons attending the test relief works amounts to 1,206 during the week.
	Thakurgaon ..	16·77	11	11	
	Balurghat ..	6·52	13	13	
14	Jalpaiguri ..	13·36	7	7	Prospects of standing crops are not very hopeful owing to heavy rain. Condition of jute is not hopeful. No damage. Steeping water is ample. Height of jute plants is 5 feet 10 inches at Sadar and 7 feet 6 inches at Alipur Duars. Rainfall is excessive. Harvesting has not commenced. No record of river level. Fodder and water are sufficient.
	Alipur ..	28·31	7	7	
15	Darjeeling ..	11·09	7	7	Potatoes and maize are being harvested. Fodder and water are sufficient. Cattle-disease exists at places. Transplantation of marwa and paddy is going on. Condition of jute is not healthy. Some damage is due to heavy rainfall. Steeping water is ample. Height of jute plants is about 7 feet. Rainfall is excessive. Harvesting of jute has not begun.
	Kurseong ..	16·13	7	7	
	Siliguri ..	15·52	8	8½	
	Kalimpong ..	9·13	7	7	

(*n*) Not reported.

Serial No.	District and subdivision.	Rainfall.	Price of common rice, in seers, per rupee.		Character of the weather, condition of crops, etc.
			This week.	Previous week	
1	2	3	4	5	6
		Inches.			
16	Rangpur ..	11·74	9½	9½	Weather cloudy Jute plants are fairly healthy. Height of jute plants is 5 to 6 feet. River level is much above last year. Rainfall is excessive. Prospects of standing crops are fair. Fodder and water are sufficient. None attended the test relief works.
	Nilphamari ..	12·42	11	11	
	Kurigram ..	7·35	11⅛	11⅛	
	Gaibandha ..	9·37	9	10	
17	Bogra ..	5·11	10½	11½	Distress continues in the western part of the district. Agricultural loan for Rs. 20,000 is urgently needed. Eastern part of the district is overflooded Rs 80,000 more agricultural loan will be necessary to help the cultivators of flooded area. Number of persons attending the test relief works amounts to 120 Number of persons gratuitously relieved is 6 Condition of jute plants is precarious Six annas damage done by high flood Steeping water is ample. Height of jute plants is 6½ feet Height of rivers is 8 feet higher Rainfall normal Four annas crop is harvested.
18	Pabna ..	0·48	10	10	Export and import are normal Condition of cattle is well. Fodder and water are sufficient. Growth of jute is fair No damage Steeping water is abundant. Height of jute plants is five feet on an average Rainfall is not excessive. *Padma* level is 3 feet lower and *Jamuna* level 2 feet higher than last year Five annas crop is harvested. 2,648 persons attended the test relief works during the week ending 25th July 1931. Total amount paid up to date Rs. 32,708-12 only.
	Sirajganj ..	1·20	11	11	
19	Malda ..	4·82	10½	10½	Weather seasonable. Prospects of standing crops are good. Transplantation of paddy seedlings has commenced Fodder and water are sufficient. Condition of jute plant is healthy. No damage. Steeping water is ample. Height of jute plants is 5 feet. Height of river is same as last year. Rainfall is moderate. Harvesting has not commenced
20	Cooch Behar ..	22·05	11 7/16	10	Weather rainy. Transplantation of winter paddy and harvesting of *aus* paddy and jute are being retarded for excessive rain Growth of jute is not healthy. Damage to some extent by heavy rain is reported from Sadar and Tufanganj subdivisions. Fodder is sufficient. Cattle-disease is reported from Sitalkuchi police-station.
21	Dacca ..	1·93	9½	9½	Rainfall at North Sadar (Kapasia) 3·52. Weather seasonable Growth of jute is healthy. No damage. Steeping water is sufficient. Height of jute is between 3½ and 6½ feet. Height of river is the same as last year. Rainfall is normal. A little over one anna crop is harvested. Harvesting of *aus* paddy and jute is going on. Fodder and water are sufficient.
	Manikganj ..	1·65	11	11	
	Narayanganj	2·35	10	10	
	Munshiganj ..	3·81	11	10	
22	Mymensingh ..	4·47	9	9	Weather seasonable. Prospects of standing crops are fair. Condition of jute is not satisfactory. No damage except in Netrakona. Steeping water is ample. Height of jute plants is 3 to 6 cubits. River level is higher than last year by 25 inches. Rainfall is normal. Three and half annas crop is harvested. Fodder and water are adequate.
	Jamalpur ..	2·00	10½	10½	
	Tangail ..	0·45	10	9	
	Netrakona ..	4·11	10	10	
	Kishorganj ..	3 04	10⅝	10	

Serial No.	District and subdivision.	Rainfall.	Price of common rice, in seers, per rupee.		Character of the weather, condition of crops, etc.
			This week.	Previous week.	
1	2	3	4	5	6
		Inches.			
23	Faridpur ..	2·45	9½	9½	Weather seasonable and favourable. Prospects of standing crops are fair. No large import or export. Fodder and water are sufficient. Growth of jute is not satisfactory in Sadar and Madaripur subdivisions but healthy and satisfactory elsewhere. No damage. Steeping water is not appreciably ample. Height of jute plants is 6 feet. River level not known. Rainfall is not excessive. About two and a half annas crop is harvested.
	Goalundo (Rajbari).	2·86	9	9	
	Madaripur ..	4·81	10	10	
	Gopalganj (*a*)	3·49	8½	8½	
24	Bakarganj (Barisal).	1·83	9½	9½	Weather seasonable. Fodder and water are sufficient. Prospects of standing crops are good. Condition of jute is improving. No damage. Height of plants is from 4 to 7 feet. River level is normal. Rainfall is a little less than last year. About two-annas crop is harvested.
	Pirojpur ..	3·72	10½	10	
	Patuakhali ..	9·12	10	10	
	Dakshin Shabazpur (Bhola).	2·99	9½	9½	
25	Chittagong ..	8·12	10 11*	10 11*	Weather seasonable, Prospects of standing *aus* crops fair. Transplantation of *aman* crop has begun. Fodder and water are sufficient. *Panga* salt sells at 16 seers per rupee at Sadar and at 13 seers per rupee at Cox's Bazar.
	Cox's Bazar ..	11·14	10	10	
26	Tippera (Comilla).	7·95	10	10	Prospects of standing crops are fair. Five annas jute crop is harvested.
	Brahmanbaria	1·74	10	10	
	Chandpur ..	1·75	9½	9½	
27	Noakhali ..	7·91	9	9	Condition of jute is fair. Harvesting has commenced.
	Feni ..	9·40	13	9	
28	Chittagong Hill Tracts.	3·98	14	13	Weather seasonable.
29	Tripura State ..	1·95	10	10	Weather seasonable. Fodder and water are sufficient. Condition of jute plants healthy. No damage. Steeping water ample. Height of plants 4 to 9 feet. Rainfall not excessive. Harvesting not commenced. Cattle-pox exists at Sabroom. Cleansed cotton sells at Rs. 6 to Rs. 13 per maund and jute at Rs. 2 to Rs. 5 per maund.

* Burma rice.

(*a*) The rainfall at Haridaspur, which is very near to Gopalganj, is not shown here.

DACCA, *the 1st August 1931*

J. C. ROY, for *Director of Agriculture, Bengal.*

Statement showing the daily gauge readings of certain rivers at the stations named below for the 17th July 1931.

Name of river and place where readings are taken.	Hour.	Reading on gauge.	Value of zero referred to P. W. D datum.	Height above P.W.D. datum.	Compared with previous day's height.		Height above P. W. D. datum on same date in—	
					Rise.	Fall.	1930.	1929
Ganges .. Monghyr ..	6 a.m. ..	111·00′	0·00′	111·00′	0·10′	..	116·10′	113·30′
Ganges .. Rajmahal ..	6 „ ..	72·80′	—0·12′	72 68′	0·15′	..	75·00′	75·45′
Ganges .. Goalundo ..	8-54 „ ..	25·40′	1·409′	26·809′	0·10′	..	22·609′	26·109′
Brahmaputra .. Dibrugarh ..	8 a.m. ..	33·80′	*301·50′	335 30′	0·50′	..	332·10′	334·56′
Brahmaputra .. Gauhati ..	....	..	136·958′	..	..	..	154·338′	160·158′
Brahmaputra .. Sirajganj ..	12-24 p.m. ..	39·60′	1·509′	41·109′	0·10′	..	37·709′	41·009′
Dhaleswari .. Sabhar ..	7 a.m. ..	20·80′	0·00′	20·80′	0·10′	..	18·10′	21·80′
Meghna .. Fenchuganj ..	7 a.m. ..	27·80′	1·509′	29·309′	Steady.		28·909′	..
Meghna .. Bhairab Bazar ..	6-24 „ ..	19·17′	1·61′	20·78′	0·08′	..	20·65′	20·94′
Meghna .. Chandpur ..	6-44 „ ..	11·42′	1·61′	13·03′	0·08′	..	11 44′	12·61′
Lakhya .. Narayanganj ..	7 a m. ..	22·75′	—5·59′	17·16′	0·17′	..	15·62′	17·28′
Madaripur Bil Route .. Takerhat ..	4-37 p m.	10·95′	0·00′	10·95′	0·15	..	10·10	11·93′
Damodar .. Edilpur ..	6 a.m. ..	3·83′	92·58′	96 41	1·00′	..	102 33′	103·91′

* Zero of gauge has been altered from 5th June 1931.

Statement showing the daily gauge readings of certain rivers at the stations named below for the 18th July 1931.

Name of river and place where readings are taken.	Hour.	Reading on gauge.	Value of zero referred to P. W. D. datum.	Height above P. W. D. datum.	Compared with previous day's height		Height above P. W. D. datum on same date in—	
					Rise.	Fall.	1930.	1929.
Ganges .. Monghyr ..	6 a.m. ..	111·50′	0·00′	111·50′	0·50′	..	117·70′	113·40′
Ganges .. Rajmahal ..	6 „ ..	73·00′	—0·12′	72·88′	0·20′	..	76·20′	75·40′
Ganges .. Goalundo ..	8-54 „ ..	25·50′	1·409′	26·909′	0·10′	..	22·909′	26·009′
Brahmaputra .. Dibrugarh ..	8 a.m. ..	33·60′	*301·50′	335·10′	..	0·20′	332·00′	334·56′
Brahmaputra .. Gauhati ..	....	24·80′	136·958′	161·758′	..	..	153·658′	159·458′
Brahmaputra .. Serajganj ..	12-24 p. m. ..	39·60′	1·509′	41·109′	Steady		37·609′	41·009′
Dhaleswari .. Sabhar ..	7 a.m. ..	20·90′	0·00′	20·90′	0·10′	..	18·20′	21·70′
Meghna .. Fenchuganj ..	7 a.m. ..	27·75′	1·509′	29·259′	..	0·05′	28·709′	..
Meghna .. Bhairab Bazar ..	6-24 „ ..	19·17′	1·61′	20·78′	0·08′	..	20·65′	20·69′
Meghna .. Chandpur ..	7-29 „ ..	11·42′	1·61′	13·03′	0·08′	..	11·61′	12·69′
Lakhya .. Narayanganj ..	7 a.m. ..	22·80′	—5·59′	17·21′	0·05′	..	15·66′	..
Madaripur Bil Route .. Takerhat ..	4-46 p.m. ..	11·05′	0·00′	11·05′	0·10′	..	10·60′	11·90′
Damodar .. Edilpur ..	6 a.m. ..	6·25′	92·58′	98·83′	..	0·17′	103·00′	103·45′

*Zero of gauge has been altered from 5th June 1931.

Statement showing the daily gauge readings of certain rivers at the stations named below for the 19th July 1931.

Name of river and place where readings are taken.	Hour.	Reading on gauge	Value of zero referred to P. W. D. datum	Height above P W D. datum.	Compared with previous day's height		Height above P. W. D. datum on same date in—	
					Rise.	Fall	1930.	1929
Ganges .. Monghyr ..	6 a m. ..	112 ·20′	0 ·00′	112 ·20′	0·70′	..	118 ·50′	113 ·50′
Ganges .. Rajmahal ..	6 „ ..	73 ·30′	—0 ·12′	73 ·18′	0 ·30′	..	77 ·20′	75 ·45′
Ganges .. Goalundo ..	8-54 p m. ..	25 ·40′	1 ·409′	26 ·809′	..	0·10′	23 ·209′	25 ·909′
Brahmaputra .. Dibrugarh ..	8 a.m. ..	33 ·50′	*301 ·50′	335 ·00′	..	0 ·10′	332 ·20′	334 ·90′
Brahmaputra .. Gauhati ..	....	24 ·70′	136 ·958′	161 ·658′	..	..	153 ·258′	159 ·158′
Brahmaputra .. Serajganj ..	12-24 p m. ..	39 ·60′	1 ·509′	41 ·109′	Steady		37 ·309′	40 ·809′
Dhaleswari .. Sabhar ..	7 a.m. ..	21 ·00′	0 ·00′	21 ·00*	0 ·10′	..	18 ·30′	21 ·70′
Meghna .. Fenchuganj ..	7 a.m. ..	27 ·75′	1 ·509′	29 ·259′	Steady		28 ·459′	..
Meghna .. Bhairab Bazar ..	6-24 „ ..	19 ·17′	1 ·61′	20 ·78′	Steady.		20 ·44′	20 69′
Meghna .. Chandpur ..	8-24 „ ..	11 ·25′	1 ·61′	12 ·86′	..	0 ·17′	11 ·61′	12 ·69′
Lakhya .. Narayanganj ..	7 a.m. ..	22 ·80′	—5 ·59′	17 ·21′	Steady.		15 ·58′	17 ·28′
Madaripur Bil Route .. Takerhat ..	4-46 p.m. ..	11 ·10′	0 ·00′	11 ·10′	0 ·05′	..	10 ·80′	12 ·(0′
Damodar .. Edilpur ..	6 a.m. ..	5 ·00′	92 ·58′	97 ·38′	..	1 ·25′	104 ·08′	101 41′

*Zero of gauge has been altered from 5th June 1931.

Statement showing the daily gauge readings of certain rivers at the stations named below for the 20th July 1931.

Name of river and place where readings are taken.	Hour.	Reading on gauge	Value of zero referred to P. W. D. datum	Height above P. W. D. datum.	Compared with previous day's height.		Height above P. W. D. datum on same date in—	
					Rise.	Fall.	1930.	1929.
Ganges .. Monghyr	6 a.m. ..	112·70′	0·00′	112·70′	0·50′	..	118·80′	115·00′
Ganges .. Rajmahal	6 „ ..	73·93′	—0·12′	73·78′	0·60′	..	77·60′	75·80′
Ganges .. Goalundo	8-54 „ ..	25·40′	1·409′	26·809′	Steady.		23·309′	25·809′
Brahmaputra .. Dibrugarh	8 a.m ..	35·70′	*301·50′	337·20′	2·20′	..	332·10′	336·06′
Brahmaputra .. Gauhati	....	24·80′	136·958′	161·758′	0·10′	..	152·558′	158·758′
Brahmaputra .. Serajganj	....	..	1·509′	..	..	..	36·809′	40·709′
Dhaleswari .. Sabhar	7 a.m. ..	21·20′	0·00′	21·20′	0·20′	..	18·50′	21·70′
Meghna .. Fenchuganj	7 a.m. ..	27·80′	1·509′	29·309′	0·05′	..	28·259′	..
Meghna .. Bhairab Bazar	6-24 „ ..	19·25′	1·61′	20·86′	0·08′	..	20·28′	20·69′
Meghna .. Chandpur	9-9 „ ..	11·17′	1·61′	12·78′	..	0·08′	11·53′	12·69′
Lakhya .. Narayanganj	7 a.m. ..	22·80′	—5·59′	17·21′	Steady.		15·41′	17·20′
Madaripur Bil Route .. Takerhat	6-24 p.m. ..	11·20′	0·00′	11·20′	0·10′	..	10·75′	12·00′
Damodar . Edilpur	6 a.m. ..	4·92′	92·58′	97·50′	..	0·08′	108·83′	99·00′

* Zero of gauge has been altered from 5th June 1931.

Statement showing the daily gauge readings of certain rivers at the stations named below for the 21st July 1931.

Name of river and place where readings are taken.	Hour.	Reading on gauge.	Value of zero referred to P.W.D. datum.	Height above P. W. D. datum.	Compared with previous day's height.		Height above P. W. D. datum on same date in—	
					Rise.	Fall.	1930.	1929.
Ganges .. Monghyr ..	6 a.m. ..	113·60′	0·00′	113·60′	0·90′	..	118·90′	117·10′
Ganges .. Rajmahal ..	6 ,, ..	74·45′	0·00′	74·45′	0·67′	..	78·00′	76·40′
Ganges .. Goalundo ..	8-54 ,, ..	25·50′	1·409′	26·909′	0·10′	..	23·309′	25·709
Brahmaputra .. Dibrugarh ..	8 a.m. ..	37·40′	*301·50′	338·90′	1·70′	..	332·00′	334·91′
Brahmaputra .. Gauhati ..	....	25·00′	136·958′	161·958′	0·20′	..	151·958′	158·558′
Brahmaputra .. Serajganj ..	12-24 p.m. ..	39·80′	1·509′	41·309′	0·10′	..	36·509′	40·709′
Dhaleswari .. Sabhar ..	7 a.m. ..	21·30′	0·00′	21·30′	0·10′	..	18·00′	21·60′
Meghna .. Fenchuganj ..	7 a.m. ..	27·85′	1·509′	29·359′	0·05′	..	28·109′	..
Meghna .. Bhairab Bazar ..	6-24 ,, ..	19·17′	1·61′	20·78′	..	0·08′	20·19′	20·65′
Meghna .. Chandpur ..	9-59 ,, ..	11·00′	1·61′	12·61′	..	0·17′	11·44′	12·69′
Lakhya .. Narayanganj ..	7 a.m. ..	22·92′	–5·59′	17·33′	0·12′	..	15·24′	17·12′
Madaripur Bil Route .. Takerhat ..	7-6 a.m. ..	11·30′	0·00′	11·30′	0·10′	..	10·70	12·10′
Damodar .. Eddipur ..	6 a.m. ..	5·25′	92·58′	97·83′	0·33′	..	106·00′	99·83′

* Zero of gauge has been altered from 5th June 1931.

Statement showing the daily gauge readings of certain rivers at the stations named below for the 22nd July 1931.

Name of river and place where readings are taken.	Hour.	Reading on gauge.	Value of zero referred to P. W. D. datum.	Height above P. W. D. datum.	Compared with previous day's height.		Height above P. W. D. datum on same date in—	
					Rise.	Fall.	1930.	1929.
Ganges .. Monghyr ..	6 a.m. ..	113·90′	0·00′	113·90′	0·30′	..	120·30′	117·80′
Ganges .. Rajmahal ..	6 „ ..	75·15′	0·00′	75·15′	0·70′	..	78·40′	77·30′
Ganges .. Goalundo ..	8-54 „ ..	25·60′	1·409′	27·009′	0·10′	..	23·209′	25·709′
Brahmaputra .. Dibrugarh ..	8 a.m. ..	36·30′	*301·50′	337·80′	..	1·10′	332·40′	334·66′
Brahmaputra .. Gauhati ..	....	25·20′	136·958′	162·158′	0·20′	..	151·358′	158·758′
Brahmaputra .. Serajganj ..	12-24 p.m. ..	39·90′	1·509′	41·409′	0·10′	..	36·209′	40·509′
Dhaleswari .. Sabhar ..	7 a.m. ..	21·40′	0·00′	21·40′	0·10′	..	18·50′	21·60′
Meghna .. Fenchuganj ..	7 a.m. ..	27·90′	1·509′	29·409′	0·05′	..	28·009′	..
Meghna .. Bhairab Bazar ..	6-24 „ ..	19·33′	1·61′	20·94′	0·17′	..	20·03′	20·57′
Meghna .. Chandpur ..	10-39 „ ..	10·67′	1·61′	12·28′	..	0·33′	11·53′	12·44
Lakhya .. Narayanganj ..	7 a.m. ..	22·80′	−5·59′	17·21′	..	0·12′	15·28′	17·12′
Madaripur Bil Route .. Takerhat ..	7-8 a.m. ..	11·45′	0·00′	11·45′	0·15′	..	10·70′	12·00′
Damodar .. Edilpur ..	6 a.m. ..	4·25′	92·58′	96·83′	..	1·00′	103·08′	102·58′

* Zero of gauge has been altered from 5th June 1931.

Statement showing the daily gauge readings of certain rivers at the stations named below for the 23rd July 1931.

Name of river and place where readings are taken.	Hour.	Reading on gauge.	Value of zero referred to P. W. D. datum.	Height above P. W. D. datum.	Compared with previous day's height.		Height above P. W. D. datum on same date in—	
					Rise.	Fall.	1930.	1929.
Ganges .. Monghyr ..	6 a.m. ..	114·30′	0·00′	114·30′	0·40′	..	121·50′	118·60′
Ganges .. Rajmahal ..	6 „ ..	75·55′	0·00′	75·55′	0·40′	..	79·30′	77·80′
Ganges .. Goalundo ..	8-54 „ ..	25·80′	1·409′	27·209′	0·20′	..	23·109′	25·709′
Brahmaputra .. Dibrugarh ..	8 a.m. ..	37·30′	*301·50′	338·80′	1·00′	..	332·10′	334·76′
Brahmaputra .. Gauhati ..	....	25·50′	136·958′	162·458′	0·30′	..	151·158′	158·958′
Brahmaputra .. Serajganj ..	12-24 p.m. ..	40·00′	1·509′	41·509′	0·10′	..	36·009′	40·409′
Dhaleswari .. Sabhar ..	7 a.m. ..	21·50′	0·00′	21·50′	0·10′	..	18·30′	21·50′
Meghna .. Fenchuganj ..	7 a.m. ..	27·95′	1·509′	29·459′	0·05′	..	27·859′	..
Meghna .. Bhairab Bazar ..	6-24 „ ..	19·33′	1·61′	20·94′	Steady.		19·86′	20·48′
Meghna .. Chandpur ..	11-24 „ ..	10·67′	1·61′	12·48′	Steady.		11·28′	12·35′
Lakhya .. Narayanganj ..	7 a.m. ..	22·96′	—5·59′	17·37′	0·16′	..	15·37′	17·16′
Madaripur Bil Route .. Takerhat ..	7-8 „ ..	11·50′	0·00′	11·50′	0·05′	..	10·70′	12·00′
Damodar .. Edilpur ..	6 „ ..	9·08′	92·58′	101·66′	4·83′	..	101·58′	105·33′

* Zero of gauge has been altered from 5th June 1931.

Statement of weekly gauge readings on the river Ganges at Rampur Boalia for the week ending the 25th July 1931.

Date.	Hour.	Height of surface above zero of gauge.	Height of surface above P. W. D. datum.	Height of surface above P. W. D. datum on the same date of last year.	Remarks.
1931.					
19th July ..	7 a.m.	....	48·55	52·20	Value of zero = 0·00 P. W. D.
20th „ ..	7 „	....	48·95	52·90	
21st „ ..	7 „	....	49·40	53·25	Zero of gauge referred to B. M. on Rajshahi College step ; value 64·73.
22nd „ ..	7 „	....	49·95	53·60	
23rd „ ..	7 „	....	50·60	54·20	
24th „ ..	7 „	....	51·15	55·10	
25th „ ..	7 „	....	52·05	55·25	

Highest recorded level on 26-8-1879=64·24.

Lowest recorded level on 25-4-1884=32·62.

P. C. Basu, *Subdivisional Officer,*
Irrigation Department, Rajshahi.

Rampur Boalia, *the 29th July 1931.*

Statement showing the gauge readings at Dacca Waterworks on the river Buriganga for the week ending 25th July 1931.

Date.	At highest water.		At lowest water.		Commencement of—		Remarks.	
	Time.	Reading.	Time.	Reading.	Ebb tide.	Flow tide.	At 7 a.m.	At 5 p.m.
1931.								
19th July ..							16·6	16·65
20th „ ..							16·7	16·75
21st „ ..							16·8	16·85
22nd „ ..	Tide is not perceptible.						16 9	16·95
23rd „ ..							17·0	17 05
24th „ ..							17·1	17·15
25th „ ..							17·15	17·2

B. M. on settling tank 39·49 O. M. S. L. Zero is at O. M. S. L.

Notable high and low water-levels of previous years.

		Taken at high tide.				Taken at low tide.
27th August	1906 ..	70·5		23rd February	1907 ..	51·06
5th September	1909 ..	66·86		13th „	1908 ..	51·06
10th August	1910 ..	69·86		12th March	1912 ..	51·06
1st „	1911 ..	68·46		6th „	1914 ..	50·60
13th „	1912 ..	67·16		22nd February	1915 ..	50·30
31st „	1915 ..	69·7		15th „	1916 ..	50·60
8th „	1916 ..	68·1		3rd March	1917 ..	51·0
12th „	1917 ..	67·1		21st February	1918 ..	51·40
13th „	1918 ..	69·12		26th „	1919 ..	50·4
2nd „	1919 ..	66·8		18th „	1920 ..	50·9
8th September	1920 ..	66·9		19th „	1921 ..	50·9
28th July	1921 ..	68·4		8th March	1922 ..	51·05
10th August	1922 ..	68·00		14th „	1923 ..	50·8
31st July	1923 ..	66·15		16th February	1924 ..	50·50
29th August	1924 ..	68·82		5th March	1925 ..	50·9
8th September	1925 ..	68·52		9th February	1926 ..	2·2
15th August	1926 ..	19·6		27th „	1927 ..	2·10
17th September	1927 ..	18·70		16th „	1928 ..	2·2
22nd August	1928 ..	20·0		21st „	1929 ..	2·0
13th July	1929 ..	17·8		24th „	1930 ..	2·3
12th September	1930 ..	18·65				

N. B.—Zero of the gauge at Dacca Waterworks prior to 11 a.m. on the 8th January 1926= −48·51 with reference to P. W. D. datum.

Zero of the gauge at Dacca Waterworks since 11 a.m. on the 8th January 1926=0·00 with reference to P. W. D. datum.

W. R. ROBSON, *Executive Engineer,*
Khulna Division.

KHULNA, *the 31st July 1931.*

Vital statistics of towns with a population of 50,000 and over of the Bengal Presidency for the week ending Saturday, the 25th July 1931.

District.	No.	Towns.	Population under registration according to Census of 1921.			Births registered.		Deaths registered.																						
			Male.	Female.	Total	Number registered (excluding still-births).	Still-births registered.	Cholera.	Small-pox.	Plague.	Malaria.	Enteric fever.	Measles.	Relapsing fever.	Kala-azar.	Other fevers.	Dysentery.	Diarrhœa.	Influenza.	Pneumonia.	Phthisis.	Other respiratory diseases.	Injuries including suicide.	Deaths from child-birth.	Other causes.	Total of all causes.			Total of corresponding week of the previous year.		
																									Male.	Female.	Total.	Male.	Female.	Total.
Calcutta ..	1	Calcutta ..	724,248	353,016	1,077,264	374	32	28	2	..	12	14	2	..	7	30	32	4	18	39	53	69	15	..	213	302	245	547	319	264	583
Burdwan ..	2	Asansol Mining Settlement.	176,814	152,539	329,353	155	1	11	..	..	1	..	..	..	..	27	8	1	..	9	..	1	3	2	50	63	50	113	30	25	55
Howrah ..	3	Howrah ..	128,472	66,829	195,301	101	9	5	..	..	2	7	..	..	..	2	7	3	..	16	6	16	3	..	28	53	42	95	57	54	111
Dacca ..	4	Dacca ..	67,333	52,117	119,450	54	..	..	..	..	..	..	1	..	1	3	6	5	..	9	..	5	..	..	17	25	22	47	22	20	42
24-Parganas	5	Bhatpara ..	45,723	19,886	65,609	18	..	..	..	..	..	..	..	..	..	4	1	..	..	2	..	..	..	..	1	4	4	8	4	11	15
	6	Titagarh ..	33,533	15,918	52,451	12	..	..	..	..	..	..	..	..	..	7	1	..	..	..	..	..	..	..	2	6	4	10	10	7	17

R. B. KHAMBATA, M.R.C.S. (ENG.), L.R.C.P. (LOND.), D.P.H. (CAMB.), *Director of Public Health, Bengal (offg.).*

CALCUTTA, *the 30th July 1931.*

Resolution on the report on the Police Administration of the Bengal Presidency for the year 1930.

GOVERNMENT OF BENGAL.

Police Department.

CALCUTTA, THE 31ST JULY 1931.

RESOLUTION—No. 3244 Pl.

Read—

The Report on the Police Administration of the Bengal Presidency for the year 1930.

The late Mr. F. J. Lowman held the office of Inspector-General of Police up to the 31st August 1930, when he was assassinated while on a visit to Dacca. Mr. T. J. A. Craig held the post from the 10th September 1930 for the remainder of the year.

2. **Eastern Frontier Rifles.**—The battalion has always been of great value to the Province as a reserve for use in emergencies, but its value has never been so clearly demonstrated as in the year 1930, when it rendered conspicuous service during the disorders in Calcutta, Chittagong and Midnapore, and in suppressing the communal disturbances in Dacca and Kishoregunj. The conduct and discipline of all ranks of the Eastern Frontier Rifles was excellent, and the Governor in Council takes this opportunity to thank them for their loyalty and devotion to duty in exceptionally trying circumstances.

Lt.-Col. Macpherson proceeded on leave preparatory to retirement towards the close of the year after over eighteen years' service with the battalion. By his retirement the battalion loses a keen and popular Commandant and the Province an able and experienced officer.

The proposal to strengthen the Eastern Frontier Rifles so as to avoid the expedient of calling on other provinces for additional forces in times of disturbance has received the anxious consideration of His Excellency in Council, but has had to be postponed in view of the serious financial situation in the Province.

3 **Recruitment and Health of the Force.**—The number of constables recruited was 1,899 against 1,612 in 1929, and it is satisfactory that the number of vacancies at the close of the year fell from 377 and 206 in 1928 and 1929, respectively, to 146 in the year under review.

Casualties rose from 6·2 per cent. to 7·6 per cent. of the total force, an increase occurring under all heads except "death," while admissions into hospital increased by 566. This is mainly attributable to the severe strain imposed on the force by the civil disobedience movement with its corollary of curtailment of leave owing to the inadequacy of the reserves to meet such a widespread and prolonged emergency. Bad housing conditions also told on the health of the force. His Excellency in Council has frequently had cause to comment on the need of improved housing arrangements, and it is with the greatest regret that he has once more to record that inadequacy of funds has prevented any progress in this direction.

There were 500 more constables of three years' service and over in the force as compared with the previous year, a fact which seems to indicate, as the Inspector-General of Police points out, that the increased rates of pay sanctioned in the year 1928 have led to greater contentment within the force. It is also satisfactory to note that in spite of the trying conditions of service during the year the number of resignations and desertions was considerably below the figures for 1927 and 1928.

Disturbances resulting from the civil disobedience movement made necessary the imposition at different times of additional police at the cost of the inhabitants under section 15 of Act V of 1861 in the Midnapore district, and in the Munshiganj and Diamond Harbour subdivisions of the districts of Dacca and 24-Parganas, while in order to strengthen the armed reserve the recruitment was sanctioned in June 1930 of an additional force of 500 armed police. The experiment was made for the first time on this occasion of enrolling a number of Namasudras in this force, and the results will be watched with interest.

The rearming of the Special Armed Force with the new ·410 bore musket was completed during the year.

4. **Discipline.**—His Excellency in Council notes with satisfaction that with one regrettable exception, there was no serious breach of discipline during the year. There was a further decrease

in the number of officers and men judicially punished and a fall of no less than 1,636 in the number of punishments inflicted departmentally. The number of criminal complaints instituted by private individuals against the police fell from 364 to 268, and out of 231 cases disposed of during the year only 26 ended in conviction. The low percentage of convictions is an indication of the falsity of many of these complaints, and His Excellency in Council agrees with the Inspector-General of Police that it is most desirable to prosecute in as many cases as possible persons whose complaints against the police appear to be the outcome of malice.

5 **Crime Statistics.**—Though the number of cognisable cases reported decreased from 91,495 in 1929 to 89,685 in 1930, the number of true cases of serious crime showed an alarming increase. Cases of rioting increased during the year from 755 to 1,608, of murder from 500 to 601, of dacoity from 693 to 1,103, and of robbery from 386 to 523. His Excellency in Council was not unprepared for these figures, which, though no doubt partly accounted for by unsatisfactory economic conditions, were to an overwhelming degree the result of the doctrines of civil disobedience so assiduously preached throughout the year. Experience in Bengal has shown that disturbed political conditions are invariably reflected in an increase in crimes of violence and particularly of dacoity. The history of 1930 has repeated that of 1922, when, following on the non-co-operation movement, the number of dacoity, robbery and rioting cases showed an increase of 55 per cent., 34 per cent. and 36 per cent., respectively, over the quinquennial average for the years 1916 to 1920. During the year under review the Congress did their utmost to wreck the chaukidari system and succeeded to this extent that they hampered—very seriously in some districts—the prevention and detection of crime. At the same time, the resources of the regular police were strained to the utmost in dealing with the activities of "volunteers" and others whose object was avowedly to bring the administration to a standstill. The inevitable result was that the control of the police over crime in the ordinary sense suffered a serious setback. There was more crime to control, and diminished means of controlling it, a situation which still continues. The large increase in dacoities was accompanied by a decrease in the percentage of dacoity cases ending in conviction, which declined from 15·6 in 1929 to 8·4 in the year under review. As in 1922 a disquieting feature of the year was the number of dacoity cases in which young men of the middle classes participated, sometimes in conjunction with ordinary criminals.

Every effort is being made to deal with the increase of serious crime, but much depends on the co-operation of the general public who, whether voluntarily or involuntarily, have shown marked reluctance to assist the police during the past eighteen months. The fact must also be faced that a police force that barely sufficed for the needs of the province before the recent upheaval is no longer adequate to cope with the conditions of to-day, and this matter is now engaging the attention of Government.

His Excellency in Council observes that abuse of section 526 of the Criminal Procedure Code has increased during the year, but, as he has pointed out on a previous occasion, this can only be remedied by legislation by the Government of India.

The number of thefts of arms increased by more than 132 per cent. during the year largely owing to the increased activity of the terrorists and their determination to secure arms at any cost. His Excellency in Council takes this opportunity of stressing the importance of all license-holders paying special attention to the safety of their arms.

6. **Criminal Tribes.**—His Excellency in Council observes with satisfaction that the conduct of the inmates of the Karwal Nut Settlement at Saidpur has shown improvement and that the industrial school at Nilphamari is showing promise of success under the devoted care of the officers of the Salvation Army. This school, where the young Nuts are being brought up and educated away from the corrupting influence of their elders, who it must be admitted are incorrigible, is indeed the real key to the reclamation of these unfortunate people.

7. **Working of the Rural Police.**—Though in a year such as 1930 any noticeable improvement in the work of the rural police was scarcely to be expected, yet there were several instances of good work by daffadars

and chaukidars. The "no-tax campaign" which was started as part of the civil disobedience movement had inevitably a serious effect on the chaukidari system. It is a matter of satisfaction that largely owing to the firmness and tact with which the local officers dealt with the situation, the attempts made in this direction did not meet with any widespread or lasting success in any district except Midnapore, although they were sufficient to disorganise the system in some areas and generally interfered with the reporting of cases. In the Midnapore district, where chaukidars who assisted in the collection of taxes were by means of personal violence and intimidation of the most objectionable sort forced into submission to the civil disobedience leaders, the movement met with considerable success. In one case in that district, His Excellency in Council regrets to record, excitement reached such a pitch that two chaukidars who had refused to resign were murdered by an infuriated mob for arresting some "volunteers"—a striking commentary on a movement whose watchword was supposed to be "non-violence." High praise is due to those among this humble body of public servants who stuck to their duties in spite of every kind of persecution, obloquy and injury to themselves and their property.

His Excellency in Council is pleased to read that the endeavours made by the police to secure the co-operation of union boards in matters relating to the prevention and detection of crime were not unfruitful. Instructions have recently been issued to District Officers in this matter and he trusts that further progress will be made during the current year.

8. **Revolutionary Crime.**—Beginning in April with the Chittagong Armoury raid, the year was marked by a long series of terrorist outrages. This spectacular and in a way, successful enterprise gave a great impetus to the terrorist movement and was followed by no less than six shooting cases (including the Writers' Buildings outrage), three of which ended fatally, and two bomb outrages besides other overt acts of a less serious nature. Immediately after the Chittagong Armoury raid the Bengal Criminal Law Amendment Ordinance was promulgated which was subsequently replaced by the Bengal Criminal Law Amendment Act, 1930. At the close of the year 454 persons had been arrested under the Ordinance and Act of whom 52 were subsequently released. The increased activity of the terrorists combined with the disturbed state of the districts made inevitable a large increase in the staff of the Central and District Intelligence Branches.

9. **General.**—The civil disobedience movement imposed a very heavy strain on the Bengal Police. Not only were the police charged with the extremely arduous and often dangerous task of maintaining order in the face of heavy odds, but on them as the prime guardians of peace and order was focussed a constant stream of malicious and unscrupulous propaganda from the side of those whose object was the destruction of the administration. No praise therefore is too great for their cheerful endurance of hardship and discomfort, their fortitude in the face of personal danger, their restraint in the face of gross provocation and vile abuse, their steadfast resistance of all attempts to tamper with their loyalty, and His Excellency in Council welcomes this opportunity of putting on record his deep appreciation of their loyalty and devotion to duty during the critical days of the past year.

His Excellency in Council is grieved to have to record that ten police officers, including the late Mr. F. J. Lowman, lost their lives in the course of the year, two of them being brutally beaten to death in Midnapore district by villagers led by civil disobedience "volunteers," and that no less than 400 were injured. Among many instances of gallantry, the magnificent courage and tenacity of the late Constable Prasanna Barua, who, though mortally wounded, seized and held a rebel during one of the skirmishes with the rebels which took place subsequent to the Chittagong Raid in April 1930, deserves special mention.

10. **Commendation of officers.**—His Excellency in Council has read with pleasure the names of the officers brought to his notice by the Inspector-General of Police, and takes this opportunity to record his high appreciation of their valuable services to the State during a very trying year.

Great credit is due to the late Mr. Lowman, and to Mr. T. J. A. Craig, the present Inspector General of Police, for the fine record of the force and the high standard of discipline and efficiency maintained at a time when special efforts were made to undermine the allegiance of the Indian ranks. It is from the superior officers that a disciplined body of men takes its tone, and the way in which the force has stood the strain to which it has recently been subjected is proof of the high sense of duty and the regard for the welfare of their men which is a tradition of the Indian Police Service. Reference has already been made in the review of the work of the Bengal Police for 1929 to the death of Mr. Lowman. By that senseless crime, the Bengal Police have lost an efficient and kindly officer whose personality had made its mark on the Province. The burden that has fallen on the Intelligence Branch owing to the great activity of the revolutionary parties has been heavy indeed, and a special word of commendation is due to the officers and men engaged on their exacting work for their unremitting labours, which in so many cases have been crowned with success.

ORDER.—Ordered that copies of the resolution be forwarded to the Inspector-General of Police, Bengal, the Commissioner of Police, Calcutta, and all Commissioners of Divisions, for information.

Ordered also that the resolution be published in the *Calcutta Gazette*.

By order of the Governor in Council,

R. N. REID,
Chief Secy. to the Govt. of Bengal (offg.).

Printed at the Bengal Government Press, Alipore, and published by the Bengal Secretariat Book Depot, Writers' Buildings, in the City of Calcutta, on the 6th August 1931.

Registered No. C207

The Calcutta Gazette

Extraordinary

SATURDAY, AUGUST 8, 1931.

GOVERNMENT OF BENGAL.

Political Department.

Political.

NOTIFICATION.

No. 13509P.—7th August 1931.—In exercise of the power conferred by section 99A of the Code of Criminal Procedure, 1898 (Act V of 1898), the Governor in Council hereby declares to be forfeited to His Majesty all copies, wherever found, of a leaflet in Bengali entitled "Mabhoi" (No fear), commencing with the word "Nirjatita" and ending with the words "Biplabi Bangla," on the ground that the said leaflet contains matter which brings or attempts to bring into hatred or contempt and excites or attempts to excite disaffection towards the Government established by law in British India, the publication of which is punishable under section 124A of the Indian Penal Code.

R. N. Reid,
Chief Secy. to the Govt. of Bengal (offg.).

Printed at the Bengal Government Press, Alipore, and published by the Bengal Secretariat Book Depot, Writers' Buildings, in the City of Calcutta, on the 8th August 1931.

Registered No. C207

The Calcutta Gazette

Extraordinary

MONDAY, AUGUST 10, 1931.

GOVERNMENT OF BENGAL.

Political Department.

Political.

NOTIFICATION.

No. 13614P.—8th August 1931.—In exercise of the power conferred by section 99A of the Code of Criminal Procedure, 1898 (Act V of 1898), the Governor in Council hereby declares to be forfeited to His Majesty all copies, wherever found, of a leaflet in Hindi entitled "Atyachari Nakarsahi Se Kuch Mahatwapurna Prashna" (some dignified questions to the oppressive bureaucracy) commencing with the word "Atyachari" and ending with the words "Ek Rashtriya Premi," on the ground that the said leaflet contains matter which brings or attempts to bring into hatred or contempt and excites or attempts to excite disaffection towards the Government established by law in British India, the publication of which is punishable under section 124A of the Indian Penal Code.

R. N. Reid,

Chief Secy. to the Govt. of Bengal (offg.).

Printed at the Bengal Government Press, Alipore, and published by the Bengal Secretariat Book Depot, Writers' Buildings, in the City of Calcutta, on the 10th August 1931.

Registered No. C207 *No. 33 of 1931*

BENGAL LIBRARY

The Calcutta Gazette

THURSDAY, AUGUST 13, 1931.

CONTENTS:

	PAGE.
PART I.—Orders and Notifications by the Governor of Bengal, the Government of Bengal, the High Court, Government Treasury, etc.	943—965
PART IA.—Orders and Notifications by the Government of India republished for general information	225—226
PART IB.—Educational Notices ..	839—874
PART II.—Advertisements	703—718
PART III.—Acts of the Bengal Legislative Council	*Nil*
PART IV.—Bills introduced in the Bengal Legislative Council, Reports of Select Committees presented or to be presented to that Council, and Bills published before introduction in that Council—	
The Calcutta Municipal (Amendment) Bill, 1931, with Statement of Objects and Reasons	73—74
The Bengal Tenancy (Amendment) Bill, 1931, with Statement of Objects and Reasons	75
The Bengal Patni Sale Law (Amendment) Bill, 1931, with Statement of Objects and Reasons	76—77
The Bengal Municipal (Amendment) Bill, 1931, with Statement of Objects and Reasons	78
The Bengal Village Self-Government (Amendment) Bill, 1931, with Statement of Objects and Reasons ..	79—80
The Bengal Municipal (Amendment No. II) Bill, 1931, with Statement of Objects and Reasons	80—82
The Bengal Municipal (Amendment) Bill, 1931, with Statement of Objects and Reasons	83—88
PART V.—Acts of the Indian Legislature assented to by the Governor General and Ordinances promulgated under section 72 of the Government of India Act ..	*Nil*
PART VI.—Bills introduced in the Council of State and Legislative Assembly, Reports of Select Committees presented to the Council and Assembly and Bills published under Rule 18 of the Indian Legislative Rules	*Nil*
SUPPLEMENT No. 33—	
First Forecast of the Cotton Crops of Bengal, 1931-32	1033
Abstract of receipts and charges of the Stamp Department in Bengal for the year ending the 31st March 1931 ..	1034
Weekly Vital Statistics—Corporation of Calcutta Notices—Weekly Weather and Crop Report—Prices current—Daily gauge-readings—Cotton Ginning and Pressing -Weekly gauge-readings ..	1035—1054

Part I

Orders and Notifications by the Governor of Bengal, the Government of Bengal, the High Court, Government Treasury, etc.

ORDERS BY HIS EXCELLENCY THE GOVERNOR OF BENGAL.

No. 2463L.—5th August, 1931.—In exercise of the power conferred by sub-section (2) of section 72B of the Government of India Act, His Excellency the Governor declared the Bengal Legislative Council prorogued on the 4th August, 1931.

J. BARTLEY,
Secy. to the Bengal Legis. Council.

ORDERS BY THE GOVERNMENT OF BENGAL.

No. 7121A.

Appointments and Transfers.

GENERAL.

Darjeeling.—No. 6946A.—3rd August 1931.—Babu Mani Mohan Ghosh, Deputy Magistrate and Deputy Collector, on leave, is posted to the headquarters station of the Darjeeling district.

Tippera.—No. 6949A.—3rd August 1931.—Maulvi Emdad Ali, Deputy Magistrate and Deputy Collector, on leave, is posted to the Chandpur subdivision of the Tippera district.

Bakarganj.—No. 7052A.—7th August 1931.—Maulvi Saiyid Salamatullah, Deputy Magistrate and Deputy Collector, on leave, is posted to the headquarters station of the Bakarganj district.

Dacca Division.—No. 7066A. — 7th August 1931.—Babu Birendra Lal Gupta, Sub-Deputy Collector, on leave, is posted to the Dacca Division.

Dinajpur-Jalpaiguri. — No. 7103A. — 8th August 1931.—The orders contained in notification No. 6921A., dated the 1st August 1931, appointing Babu Jatindra Nath Mukharji, officiating Additional District and Sessions Judge, Dinajpur, to act, in addition to his own duties, as Additional Sessions Judge of Jalpaiguri, are cancelled.

POLICE.

Malda.—No. 6944A.—3rd August 1931.—Mr. S. G. Taylor, Superintendent of Police, on leave, is appointed temporarily to be Superintendent of Police, Malda.

Malda-Dinajpur.—No. 6980A.—4th August 1931.—Babu Murari Lal Adhikari, Inspector of Police, is appointed to act as Deputy Superintendent of Police and is posted to the headquarters station of the Dinajpur district on being relieved of his appointment as officiating Superintendent of Police, Malda.

ECCLESIASTICAL.

Calcutta.—No. 7089A.—8th August 1931.—The Reverend W. Boulton, Junior Chaplain, St. Paul's Cathedral, Calcutta, is appointed, in addition to his own duties, to be Chaplain of the Presidency General Hospital, Calcutta, with effect from the 1st August 1931, or any subsequent date on which he took over charge.

Leave.

GENERAL.

No. 6981A.—4th August 1931.—In supersession of the orders contained in notification No. 937A.D., dated the 1st June 1931, Mr. J. C. French, I.C.S., is allowed leave from the 11th June 1931 to the 6th September 1931, inclusive, viz., leave on average pay for twenty days, under rule 81 (*b*) (*i*) of the Fundamental Rules, and leave on half average pay for the remaining period, under rule 81 (*d*) of those Rules.

24-Parganas.—No. 7027A. — 6th August 1931.—Babu Ramani Ranjan Datta, Sub-Deputy Collector, 24-Parganas, is allowed leave on average pay, under rule 81 (*b*) (*ii*) of the Fundamental Rules, up to the 14th October 1931, with effect from the date on which he may avail himself of it.

No. 7071A. — 7th August 1931. — Babu Jogesh Chandra Sen, Deputy Magistrate and Deputy Collector, is allowed leave for six months in extension of the leave granted to him under the orders of the 19th May 1931, viz., leave on average pay for three months and sixteen days, under the proviso to rule 81 (*b*) (*i*) of the Fundamental Rules, and leave on half average pay for the remaining period, under rule 81 (*d*) of those Rules.

Mymensingh. — No. 7075A.—7th August 1931.—Babu Hem Chandra Sen, Sub-Deputy Collector, Mymensingh, is allowed leave on average pay for three months and seventeen days, under rule 81 (*b*) (*ii*) of the Fundamental Rules, with effect from the 7th September 1931.

Khulna.—No. 7113A.—10th August 1931.—Maulvi Lehazuddin Ahmad, Deputy Magistrate and Deputy Collector, Khulna, is allowed leave on average pay for two months, under rule 81 (*b*) (*ii*) of the Fundamental Rules, with effect from the 14th July 1931.

No. 7115A.—10th August 1931.—Babu Nripendra Nath Ray, Deputy Magistrate and Deputy Collector, is allowed leave on half average pay for three months, under rule 81 (*d*) of the Fundamental Rules, in extension of the leave granted to him under the orders of the 25th March 1931.

POLICE.

Khulna.—No. 7011A.—5th August 1931.—Maulvi Saiyid Ali Ahmad, Deputy Superintendent of Police, Khulna, is allowed leave on average pay for four months, under the proviso to rule 81 (*b*) (*ii*) of the Fundamental Rules, with effect from the date on which he may be relieved.

R. N. REID,
Chief Secy. to the Govt. of Bengal (offg.).

POLITICAL DEPARTMENT.

Political.

NOTIFICATIONS.

No. 13448P.—7th August 1931.—In exercise of the power conferred by section 99A of the Code of Criminal Procedure, 1898 (Act V of 1898), the Governor in Council hereby declares to be forfeited to His Majesty all copies, wherever found, of a booklet in Hindi entitled "Cawnpur Ka Danga" written and published by Pandit Rama Sankar Sukla of No. 1, Boloram Dey Street, Calcutta, on the ground that the said booklet contains matter which brings or attempts to bring into hatred or contempt and excites or attempts to excite disaffection towards the Government established by law in British India, the publication of which is punishable under section 124A of the Indian Penal Code.

No. 13686P. — 11th August 1931. — Their Excellencies the Viceroy and the Countess of Willingdon will arrive at Howrah Railway Station on Wednesday, the 19th August 1931. The arrival will be private.

2. Their Excellencies will be received on arrival by His Excellency the Governor of Bengal and the Hon'ble Lady Jackson attended by their personal staff and the officials detailed below:—

The Commissioner of the Burdwan Division.
The Commander, Presidency and Assam District.
The Magistrate of Howrah.
The Inspector-General of Police, Bengal.
The Commissioner of Police, Calcutta.
The Agent, Bengal-Nagpur Railway.

A salute of 31 guns will be fired from the ramparts of Fort William as His Excellency the Viceroy alights from his saloon.

3. After the necessary presentations have been made Their Excellencies the Viceroy and the Countess of Willingdon accompanied by His Excellency the Governor and the Hon'ble Lady Jackson will proceed to Government House by motor.

4. **Dress.**—Undress uniform will be worn by all civil and military officers. Gentlemen not entitled to wear uniform will appear in Morning Dress or Durbar Dress.

Jails.

NOTIFICATION.

No. 2900P.J.—10th August 1931.—Major B. G. Mallya, I.M.S., has been granted by the High Commissioner for India leave on average pay for seven months and fourteen days from 18th October 1926 and in continuation study leave for ten months, leave on average pay for seventeen days and leave on half average pay for one month and ten days.

This cancels Revenue (Jails) Department notifications Nos. 1042T.R., dated the 6th October 1926, and 5892Jails, dated the 20th April 1927, Political (Jails) Department notification No. 590P.J., dated the 8th March 1928, Local Self-Government (Medical) Department notification No. 2066Medl., dated the 18th June 1928, and Political (Jails) Department notification No. 1676P.J., dated the 23rd August 1928.

R. N. REID,

Chief Secy. to the Govt. of Bengal (offg.).

Orders by the Inspector-General of Prisons, Bengal.

No. 21387.—8th August 1931.—Dr. Radha Raman Ghose made over charge of the Khulna Jail to Dr. Probhat Chandra Mukherji on the forenoon of the 29th July 1931.

M. A. SINGH, MAJOR, I.M.S.,

for *Inspector-General of Prisons, Bengal.*

POLICE DEPARTMENT.

NOTIFICATIONS.

Faridpur.—No. 3283Pl.—4th August 1931. —Whereas the Governor in Council has reason to believe that the members of a gang of burglars and thieves ordinarily residing in the jurisdiction of police-station Naria in the Faridpur district and commonly known as the "Kalukati gang" are addicted to the systematic commission of non-bailable offences:

Now, therefore, the Governor in Council, in exercise of the power conferred by section 3 of the Criminal Tribes Act, 1924 (Act VI of 1924), hereby declares the said gang to be a criminal tribe for the purpose of that Act.

Faridpur.—No. 3284Pl.—4th August 1931. —In exercise of the power conferred by section 10 of the Criminal Tribes Act, 1924 (Act VI of 1924), the Governor in Council hereby directs that every registered member of the "Kalukati gang," which has been declared by notification No. 3283Pl., dated the 4th August 1931, to be a criminal tribe, shall, in the prescribed manner, report himself at fixed intervals and notify his place of residence, any change or intended change of residence, and any absence or intended absence from his residence.

R. N. REID,

Chief Secy. to the Govt. of Bengal (offg.).

JUDICIAL DEPARTMENT.

No. 7122A.

Powers.

Mymensingh.—No. 7018A. — 6th August 1931.—Babu Dhirendra Mohan Gupta, Deputy Magistrate, Netrakona, Mymensingh, is vested with powers under section 110 of the Criminal Procedure Code.

Hooghly.—No. 7073A.—7th August 1931. —Babu Binode Mohan Chakrabatti, Deputy Magistrate, on probation, Hooghly, is vested with the powers of a Magistrate of the first class.

Dacca.—No. 7098A.—8th August 1931.—Maulvi Aminullah, Deputy Magistrate, Munshiganj, Dacca, is vested with the power to try summarily the offences mentioned in section 260 of the Code of Criminal Procedure.

R. N. REID,
Chief Secy. to the Govt of Bengal (offg.).

Appointments and Transfers.

24-Parganas.—No. 5737J.—31st July 1931. —In exercise of the power conferred by section 57 of the Provincial Insolvency Act, 1920 (V of 1920), the Governor in Council is pleased to appoint Babu Dinesh Chandra Ray Chaudhuri to be an Official Receiver for a period of two years from the 11th August 1931, within the local limits of the district of the 24-Parganas.

Howrah.—No. 5770J.—4th August 1931.—In exercise of the powers conferred by sections 14 and 15 and the proviso to section 357 of the Code of Criminal Procedure, 1898 (Act V of 1898), the Governor in Council is pleased—

(*a*) to confer upon Babu Bishnupada Ray the powers of a Magistrate of the second class, in the district of Howrah, for a period of three years from the 14th September 1931, in respect to such cases as may be made over to him within the limits of the Uluberia subdivision of the said district,

(*b*) to direct that he shall, in addition to sitting singly, sit as a member of the Uluberia bench in the said district, and

(*c*) to direct him to take down evidence in the English language.

Chittagong.—No. 5791J. — 5th August 1931.—Babu Tarak Nath Basu, Subordinate Judge and Assistant Sessions Judge, on leave, is appointed to be Second Additional Subordinate Judge and Assistant Sessions Judge of Chittagong.

Chittagong-Dacca. — No. 5793J. — 5th August 1931.—Babu Rajendra Lal Chakrabatti, officiating Second Additional Subordinate Judge of Chittagong, is appointed, on reversion, to be a munsif in the district of Dacca, to be ordinarily stationed at Munshiganj, and also appointed under section 12 (*1*) of the Provincial Small Cause Court Act, 1887 (IX of 1887), to be Registrar of the Court of Small Causes, Munshiganj, *vice* Babu Hiralal Das Gupta, deceased.

Chittagong-Khulna. — No. 5799J. — 6th August 1931.—Babu Nirmal Chandra Chatarji, officiating munsif of South Raojan, in the district of Chittagong, is appointed to act as a munsif in the district of Khulna, to be ordinarily stationed at the Sadar station, during the absence, on leave, of Maulvi Omer Mallik, or until further orders.

Mymensingh.—No. 5801J. — 6th August 1931.—Babu Sharat Chandra Mukharji, munsif, on leave, is appointed to be a munsif in the district of Mymensingh, to be ordinarily stationed at Kishoreganj, *vice* Babu Suresh Chandra Chakrabatti, deceased.

Chittagong-Khulna.—No. 5803J.—6th August 1931.—Babu Indu Bhusan Basu, officiating munsif of North Raojan, in the district of Chittagong, is appointed to act, until further orders, as a munsif in the district of Khulna, to be ordinarily stationed at Bagerhat.

Howrah.—No. 5819J.—6th August 1931.—In exercise of the power conferred by section 57 of the Provincial Insolvency Act, 1920 (V of 1920), the Governor in Council is pleased to appoint Babu Birendra Nath Roy to be an Official Receiver for a period of two years from the 11th August 1931, within the local limits of the district of Howrah.

Howrah.—No. 5825J.—7th August 1931.—In exercise of the powers conferred by sections 14 and 15 and the proviso to section 357 of the Code of Criminal Procedure, 1898 (Act V of 1898), the Governor in Council is pleased—

(*a*) to confer upon Babu Surendra Nath Bagchi the powers of a Magistrate of the third class, in the district of Howrah, for a period of three years from the 23rd September 1931,

(*b*) to direct him to sit as a member of the Bally bench in the said district, and

(*c*) to direct him to take down evidence in the English language.

Howrah.—No. 5827J.—7th August 1931.—In exercise of the powers conferred by sections 14 and 15 and the proviso to section 357 of the Code of Criminal Procedure, 1898 (Act V of 1898), the Governor in Council is pleased—

(*a*) to confer upon Babu Girija Prasanna Ray the powers of a Magistrate of the third class, in the district of Howrah, for a period of three years from the 5th September 1931,

(*b*) to direct him to sit as a member of the Bally bench in the said district, and

(*c*) to direct him to take down evidence in the English language.

Powers.

Khulna.—No. 5752J.—1st August 1931.—In exercise of the power conferred by section 14 of the Code of Criminal Procedure, 1898 (Act V of 1898), the Governor in Council is pleased to confer upon each of the gentlemen named below, who are Honorary Magistrates of the Satkhira bench, the powers of a Magistrate of the third class, in the district of Khulna, for the period during which he has been directed to sit as a member of the said bench in respect to such cases as may be made over to him, when sitting singly, within the limits of the Satkhira subdivision of the said district—

Babu Sridhar Chakrabatti.
Maulvi Abdur Rauf Khan Chaudhuri.

NOTIFICATIONS.

Nadia.—No. 5796J.—5th August 1931.—In exercise of the power conferred by section 65 of the Bengal Village Self-Government Act, 1919 (Bengal Act V of 1919), the Governor in Council is pleased to appoint the following members of the union boards mentioned below to be, during their term of office as such members, union benches, within the jurisdiction of the union boards of which they are, respectively, members for the purposes of that section :—

Renaghat subdivision, district Nadia.

Ranaghat police-station.

Majergram union board.

Babu Pravash Chandra Bhattacharji.
Babu Surendra Nath Chatarji.
Munshi Golam Robbani Mandal.

Raghunathpur union board.

Babu Surya Narain Ray.
Babu Charu Chandra Bhattacharji.
Munshi Abdul Gaffur.

Habibpur union board.

Babu Ashutosh Datta.
Babu Hazari Lal Banarji.
Babu Sauti Kumar Bakshi.
Babu Radhika Prasad Ghosh.

Nowpara union board.

Babu Bibhuti Bhusan Chakrabatti.
Babu Satya Charan Chakrabatti.
Babu Kali Bhusan Bhattacharji.
Babu Amulya Kumar Chatarji.

Nadia.—No. 5797J.—5th August 1931.—In exercise of the power conferred by section 73 of the Bengal Village Self-Government Act, 1919 (Bengal Act V of 1919), the Governor in Council is pleased to appoint the following members of the union boards mentioned below to be, during their term of office as such members, union courts, within the jurisdiction of the union boards of which they are, respectively, members for the purposes of that section :—

Ranaghat subdivision, district Nadia.

Ranaghat police-station.

Majergram union board.

Babu Pravash Chandra Bhattacharji.
Babu Surendra Nath Chatarji.
Munshi Golam Robbani Mandal.

Raghunathpur union board.

Babu Surya Narain Ray.
Babu Charu Chandra Bhattacharji.
Munshi Abdul Gaffur.

Habibpur union board.

Babu Ashutosh Datta.
Babu Hazari Lal Banarji.
Babu Sauti Kumar Bakshi.
Babu Radhika Prasad Ghosh.

Nowpara union board.

Babu Bibhuti Bhusan Chakrabatti.
Babu Satya Charan Chakrabatti.
Babu Kali Bhusan Bhattacharji.
Babu Amulya Kumar Chatarji.

Tippera.—No. 5829J.—7th August 1931.—In exercise of the power conferred by section 65 of the Bengal Village Self-Government Act, 1919 (Bengal Act V of 1919), the Governor in Council is pleased to appoint the following members of the union boards mentioned below to be, during their term of office as such members, members of the union benches within the jurisdiction of the union boards of which they are, respectively, members for the purposes of that section :—

Chandpur subdivision, district Tippera.

Chandpur police-station.

Hanarchar union board.

Babu Matilal Majumdar.

Asikati union board

Munshi Basir Ahamad Talukdar.

Matlab police-station.

Mohanpur union board.

Munshi Serajuddin Patwari.

Charkalia union board.

Munshi Badsha Sarkar Haji.

Hajiganj palice-station.

Chitoshi union board.

Munshi Md. Ashrafali.

Tippera.—No. 5830J.—7th August 1931.—In exercise of the power conferred by section 73 of the Bengal Village Self-Government Act, 1919 (Bengal Act V of 1919), the Governor in Council is pleased to appoint the following members of the union boards mentioned below to be, during their term of office as such members, members of the union courts within the jurisdiction of the union boards of which they are, respectively, members for the purposes of that section :—

Chandpur subdivision, district Tippera.

Chandpur police-station.

Hanarchar union board.

Munshi Muhammad Omarkhan.

Asikati union board

Maulvi Abdul Majid.

Hajiganj police-station.

Chitoshi union board.

Munshi Muhammad Ashrafali.

Matlab police-station.

Shait Nal union board.

Munshi Jamiruddin.

Nadia.—No. 5849J.—8th August 1931.—In exercise of the power conferred by section 65 of the Bengal Village Self-Government Act, 1919 (Bengal Act V of 1919), the Governor in Council is pleased to appoint Babu Gourpada Biswas, a member of the Hardi union board within the Alamdanga police-station in the Chuadanga subdivision of the Nadia district, to be, during his term of office as such member, a member of the union bench within the jurisdiction of the said union board for the purposes of that section, *vice* Babu Nabadwip Chandra Biswas, deceased.

Nadia.—No. 5850J.—8th August 1931.—In exercise of the power conferred by section 73 of the Bengal Village Self-Government Act, 1919 (Bengal Act V of 1919), the Governor in Council is pleased to appoint Babu Gourpada Biswas, a member of the Hardi union board within the Alamdanga police-station in the Chuadanga subdivision of the Nadia district, to be, during his term of office as such member, a member of the union court within the jurisdiction of the said union board for the purposes of that section, *vice* Babu Nabadwip Chandra Biswas, deceased.

Nadia.—No. 5861J.—10th August 1931.—In exercise of the power conferred by section 65 of the Bengal Village Self-Government Act, 1919 (Bengal Act V of 1919), the Governor in Council is pleased to appoint Munshi Jubbar Ali Biswas, a member of the Murutia union board within the Karimpore police-station in the Meherpur subdivision of the Nadia district, to be, during his term of office as such member, a member of the union bench within the jurisdiction of the said union board for the purposes of that section, *vice* Munshi Sanatan Biswas, deceased.

Nadia.—No. 5862J.—10th August 1931.—In exercise of the power conferred by section 73 of the Bengal Village Self-Government Act, 1919 (Bengal Act V of 1919), the Governor in Council is pleased to appoint Maulvi Shaikh Salimuddin, a member of the Murutia union board within the Karimpore police-station in the Meherpur subdivision of the Nadia district, to be, during his term of office as such member, a member of the union court within the jurisdiction of the said union board for the purposes of that section, *vice* Munshi Sanatan Biswas, deceased.

ERRATUM.

Dacca.—No. 5772J.—4th August 1931.—In notifications No. 3904J., and No. 3905J., dated the 11th May 1931, published at pages 556-57 of Part I of the *Calcutta Gazette* of the 14th May 1931, regarding the reconstitution of certain union benches and courts in the Manikganj subdivision of the Dacca district, *for* "Maulvi Najibuddin Khan" under "Baldhara union board" *read* "Maulvi Najibuddin Ahamed."

J. W. NELSON,
Secy. to the Govt. of Bengal.

LOCAL SELF-GOVERNMENT DEPARTMENT.

NOTIFICATIONS

Minister-in-charge: The Hon'ble Mr. Bijoy Prasad Singh Roy.

Mymensingh.—No. 3004M. — 4th August 1931.—In exercise of the power conferred by clause (*a*) of section 59 of the Bengal Municipal Act, 1884 (Bengal Act III of 1884), the Government of Bengal (Ministry of Local Self-Government) are pleased to approve the resolution passed by the Commissioners of the Mymensingh Municipality under section 28 of that Act, electing Rai Umesh Chandra Chakladar Bahadur to be their Chairman.

24-Parganas.—No. 3005M. — 4th August 1931.—In exercise of the power conferred by clause (*a*) of section 59 of the Bengal Municipal Act, 1884 (Bengal Act III of 1884), the Government of Bengal (Ministry of Local Self-Government) are pleased to approve the resolution passed by the Commissioners of the Naihati Municipality in the district of the 24-Parganas under section 23 of that Act, electing Mr. D. D. Frier to be their Chairman.

No. 3013M.—6th August 1931.—The following draft of an amendment, which, in exercise of the power conferred by section 15 of the Bengal Municipal Act, 1884 (Bengal Act III of 1884), the Government of Bengal

(Ministry of Local Self-Government) propose to make in the rules published with notification No. 2180M., dated the 4th July 1925, is published for the information of persons likely to be affected thereby. The object of the draft rule is to ensure that so far as possible municipal elections shall be held in time to result in the reconstitution of municipalities at regular three yearly intervals.

2. The draft will be taken into consideration on the 1st October 1931, and any objection or suggestion received by the undersigned through the District Magistatres before that date will be duly considered:—

Draft amendment.

For rule 18 *substitute* the following:—

"18. Elections shall be held as nearly as is practicable, at intervals of three years. Not later than two years and six months after appointment by Government of, or their approval to the election of, the first Chairman after the election and appointment of Commissioners, the Commissioner of the Division shall fix a date for the next general election so calculated as to permit of the reconstitution of the body of Commissioners of the Municipality after three years' office of the Commissioners. Dates for by-elections shall be fixed by the Commissioner of the Division as soon as convenient after a vacancy arises."

Burdwan.—No. 3048M.—10th August 1931.—The following draft order, which the Government of Bengal (Ministry of Local Self-Government) propose to make in exercise of the powers conferred by section 86 and 279 of the Bengal Municipal Act, 1884 (Bengal Act III of 1884), is published for the information of persons likely to be affected thereby.

2. The draft will be taken into consideration on the 25th September 1931, and any objection or suggestion which may be received by the undersigned, through the District Magistrate, before that date will be duly considered:—

Draft order.

In exercise of the power conferred by section 86 of the Bengal Municipal Act, 1884 (Bengal Act III of 1884), the Government of Bengal (Ministry of Local Self-Government) are pleased to sanction the levy, by the Commissioners of the Asansol Municipality, in the district of Burdwan, under sub-section (*1*) of section 279 of that Act, of a water-rate within the said municipality.

2. In exercise of the powers conferred by clause (*a*) of the first proviso to section 279 of the same Act, the Government of Bengal (Ministry of Local Self-Government) are pleased further to direct that the water-rate shall not be levied upon any house or land within the said municipality, no part of which lies within a radious of 1,320 feet from the nearest stand-pipe or other supply of water available to the public.

Medical.

Minister-in-charge: The Hon'ble Mr. Bijoy Prasad Singh Roy.

Midnapore.—No. 2360Medl.—3rd August 1931.—Dr. Brindaban Chandra Banik, Medical Officer, Hijli Detention Camp, Midnapore district, is granted leave on average pay for three months, under Fundamental Rule 81 (*b*) (*ii*), with effect from the date of relief.

Calcutta-Mymensingh.—No. 2361Medl.—3rd August 1931.—Dr. Ramani Mohon Mukherji, on supernumerary duty at the Medical College Hospitals, Calcutta, is posted to the Netrokona subdivision and dispensary in the district of Mymensingh, *vice* Dr. A. K. M. Abdul Wahed.

Mymensingh-Midnapore.—No. 2362Medl.—3rd August 1931.—Dr. A. K. M. Abdul Wahed of the Netrokona subdivision and dispensary in the district of Mymensingh, is appointed to act as Medical Officer, Hijli Detention Camp, Midnapore district, *vice* Dr. Brindaban Chandra Banik.

Calcutta.—No. 2364Medl. — 3rd August 1931.—Lt.-Col. V. B. Green-Armytage, I.M.S., on return from leave, is reposted as Professor of Midwifery, Medical College, Calcutta, and Obstetric Physician and Surgeon, Medical College Hospital, Calcutta, with effect from the afternoon of the 11th July 1931.

Calcutta.—No. 2366Medl — 3rd August 1931.—Lt.-Col. K. K. Chatterji, F.R.C.S.I., I.T.F., officiating Superintendent, Campbell Medical School and Hospital, Calcutta, is granted leave on average pay for four months, under Fundamental Rule 81 (*b*) (*ii*), with effect from the 6th July 1931.

This cancels notification No. 2044Medl., dated the 4th July 1931.

Calcutta.—No. 2391Medl. — 5th August 1931.—The services of Dr. M. Nolan, Resident Surgeon, Eden Hospital, are placed at the disposal of the Dufferin Fund, with effect from the 1st May 1931.

This department notification No. 1465Medl., dated 1st May 1931, is hereby cancelled.

Calcutta.—No. 2434Medl. — 7th August 1931.—Assistant Surgeon Dr. Benoy Lal Mozumdar, Additional Physician, Medical College Hospitals, Calcutta, was granted leave on average pay for one month, under Fundamental Rule 81 (*b*) (*ii*), with effect from the 26th May 1931.

This cancels notification No. 1710Medl., dated the 30th May 1931.

NOTIFICATIONS.

No. 2411Medl.—5th August 1931.—In pursuance of section 7 of the Bengal Medical Act, 1914 (Bengal Act VI of 1914), it is hereby notified for general information that Major S. N. Mookerjee, F.R.C.S., I.M.S., has been duly elected, under clause (*e*) of section 4 of that Act, to be a member of the Bengal Council of Medical Registration, *vice* Lt.-Col. K. K. Chatterji, F.R.C.S.I., I.T.F., resigned.

Minister-in-charge: The Hon'ble Mr. Bijoy Prasad Singh Roy.

No. 2357Medl.—3rd August 1931.—The Government of Bengal (Ministry of Local Self-Government) are pleased to fix the pay of the following posts of Professors in the School of Tropical Medicine and Hygiene, when held by a member of the Bengal Medical Service, at Rs. 650—100/2—1,350 with the addition of a non-practising allowance of Rs. 150 per month, in lieu of private practice:—

Professor of Tropical Medicine.
Professor of Pharmacology.

2. This supersedes notification No. 1796-Medl., dated the 10th June 1931.

Public Health.

NOTIFICATIONS.

Minister-in-charge: The Hon'ble Mr. Bijoy Prasad Singh Roy.

24-Parganas.—No. 1792P.H.—7th August 1931.—In exercise of the power conferred by section 290 of the Bengal Municipal Act, 1884 (Bengal Act III of 1884), the Government of Bengal (Ministry of Public Health) are pleased to add the following rule to the rules published under notification No. 1268-P.H., dated the 2nd May 1929, and as subsequently amended by notification No. 590P.H., dated the 20th February 1930, subject to which the Commissioners of the Naihati Municipality may allow communication pipes to be laid from the service-pipes of the Commissioners for the purpose of leading water to holdings within the municipality for domestic purposes only:—

Rule.

21. Rules 1 (so far as it relates to addition and alteration to an existing water-supply), 14, 15, 16, 17 and 19 shall apply to the connections given before the issue of these rules.

Hooghly.—No. 1794P.H. — 7th August 1931.—In exercise of the power conferred by section 221 of the Bengal Municipal Act, 1884 (Bengal Act III of 1884), and upon the application of the Commissioners of the Bansberia Municipality in the district of Hooghly, made in pursuance of a resolution passed at a meeting specially convened to consider the question, the Government of Bengal (Ministry of Public Health) are pleased to extend all the provisions of Part VII of that Act to the said municipality.

II. This cancels notification No. 2615-P.H., dated the 14th September 1929.

C. W. GURNER,
Secy. to the Govt. of Bengal.

CALCUTTA, THE 8TH AUGUST 1931.

RESOLUTION.—No. 1799P.H.

Minister-in-charge: The Hon'ble Mr. Bijoy Prasad Singh Roy.

By resolutions No. 1747P.H., dated the 10th June 1921, and No. 1824P.H., dated the 16th July 1930, the Sanitary Board, Bengal, was reconstituted with six *ex-officio* and nine nominated members. The term of office of the members other than *ex-officio* members was fixed for one year. It was also directed that at least one of the nominated members of the Board should be a Muhammadan. The term of office of the existing nominated members having expired, the Government of Bengal (Ministry of Local Self-Government) are pleased to appoint the following lady and gentlemen to be members of the Board:—

The Chief Medical Officer, Eastern Bengal Railway.

Dr. K. Ahmed.

Dr. (Mrs.) Mary H. Y. Remfrey.

Dr. D. N. Maitra.

Dr. Tarak Nath Sur, M.D., representative of the Council of Medical Registration and the State Medical Faculty, Bengal.

Dr. T. Ahmed, M.B. (Cal.), D.O.M.S. (London), F.R.C.S. (Edin.), representative of the Council of Medical Registration and the State Medical Faculty, Bengal.

Rai Upendra Nath Brahmachari Bahadur.

Hadji Captain Dabiruddin Ahmed.

Mr. George Bransby Williams, M.INST., C.E., F.R.SAN.I., M.I.E. (Ind.).

They will hold office for one year with effect form the date of this resolution.

ORDER.—Ordered that a copy of the above resolution be published in the *Calcutta Gazette* for general information.

By order of the Govt. of Bengal
(Ministry of Local Self-Govt.),

C. W. GURNER,
Secy. to the Govt. of Bengal.

EDUCATION DEPARTMENT.

NOTIFICATIONS.

No. 2151Edn.—7th August 1931.—In exercise of the powers conferred by section 6, sub-section (*1*), clause (*c*), and section 10 of the Indian Universities Act, 1904 (VIII of 1904), as amended by the Calcutta University Act, 1921 (VII of 1921), His Excellency the Chancellor of the Calcutta University is pleased to re-nominate Nawabzada A. S. M. Latifur Rahman, M.A., (Cantab.), (Barrister-at-Law), Judge, Calcutta Small Cause Court, to be an Ordinary Fellow of the University.

Minister-in-charge: The Hon'ble Mr. K. Nazim-ud-Din, C.I.E.

Calcutta.—No. 2109Edn.—4th August 1931.—Mr. J. R. Barrow, Principal, Presidency College, Calcutta, on leave preparatory to retirement, is appointed to the post of Assistant Director of Public Instruction for Muhammadan Education, Bengal, *vice* Mr. J. M. Bottomley, transferred, but he will continue to be on leave.

Calcutta.—No. 2110Edn.—4th August 1931.—Mr. J. M. Bottomley, Assistant Director of Public Instruction for Muhammadan Education, Bengal, is appointed to be Principal, Presidency College, Calcutta, with effect from the 6th August 1931, but he will continue to act as Director of Public Instruction, Bengal, until further orders.

Rajshahi-Calcutta.—No. 2111Edn. — 4th August 1931.—Mr. Bhupati Mohan Sen, officiating Principal, Rajshahi College, is appointed to act as Principal, Presidency College, Calcutta, from the 6th August 1931, or any subsequent date on which he joins the appointment, during the absence, on deputation, of Mr. J. M. Bottomley, or until further orders.

Rajshahi.—No. 2112Edn. — 4th August 1931.—Rai Hem Chandra De Bahadur, officiating Vice-Principal, Rajshahi College, is appointed, until further orders, to act as Principal of the college on his own pay in the Bengal Educational Service, with effect from the date on which he takes over charge.

Dacca.—No. 2164Edn.—10th August 1931.—Mr. C. J. Henderson, Principal, Ahsanullah School of Engineering, Dacca, is allowed leave on average pay for twelve days, under rules 81 (*b*) (*i*) and 82 (*b*) of the Fundamental Rules, and, in continuation, leave on half average pay for one year eight months and fourteen days, under rule 81 (*d*) of those rules, with effect from the 6th August 1931, or any subsequent date from which he avails himself of it.

2. This cancels the orders in notification No. 1755Edn , dated the 4th July 1931.

Miscellaneous.

NOTIFICATION.

Minister-in-charge: The Hon'ble Mr. K. Nazim-ud-Din, C.I.E.

Calcutta.—No. 1371Misc. — 8th August 1931.—Maulvi Saiyid Manzur Murshed, Deputy Magistrate and Deputy Collector, is appointed to be Assistant Secretary to the Government of Bengal in the Education Department.

Registration.

NOTIFICATIONS.

Minister-in-charge: The Hon'ble Mr. K. Nazim-ud-Din, C.I.E.

No. 673Regn.— 5th August 1931.—The following officers are confirmed as Sadar Sub-Registrars with effect from the dates noted against their names:—

Maulvi Abdus Samad Khan, with effect from the 2nd March 1931, *vice* Babu Jogesh Chandra Mitra, retired.

Babu Satish Chandra Ray, with effect from the 11th April 1931, *vice* Rai Sahib Ashutosh Sarkar, retired.

Midnapore.—No. 676Regn. — 5th August 1931.—In exercise of the power conferred by section 3 of the Bengal Muhammadan Marriages and Divorces Registration Act, 1876 (Bengal Act I of 1876), the Government of Bengal (Ministry of Education) are pleased to appoint Maulvi Abul Mokerem Muhammad Anwarullah temporarily to be a Muhammadan Registrar within the police-stations of Panskura, Debra, Sabang and Pingla, in the district of Midnapore.

Midnapore.—No. 677Regn.—5th August 1931.—In exercise of the power conferred by section 2 of Kazis' Act, 1880 (Act XII of 1880), the Government of Bengal (Ministry of Education) are pleased to appoint Maulvi Abul Mokerem Muhammad Anwarullah temporarily to be the Kazi for the celebration of marriages and the performance of other rites and ceremonies within the police-stations of Panskura, Debra, Sabang and Pingla, in the district of Midnapore.

A. J. DASH,

Secy. to the Govt. of Bengal.

Orders by the Director of Public Instruction, Bengal.

BENGAL EDUCATIONAL SERVICE.

Chittagong.—No. 25B.—3rd August 1931.—Babu Biswesswar Dutta, officiating Professor, Chittagong College, in the Bengal Educational Service, is granted, in terms of the proviso to rule 81 (*b*) (*ii*) of the Fundamental Rules, leave on average pay, on medical certificate, for two months, with effect from the 7th July 1931.

J. M BOTTOMLEY,

Director of Public Instrn., Bengal (offg.).

Orders by the Inspector-General of Registration, Bengal.

Howrah.—No. 512.—4th August 1931.—Maulvi Abul Khair Muhammad Siddique, Joint Sub-Registrar of Howrah, is allowed leave on average pay for one month, under rule 81 (*b*) (*ii*) of the Fundamental Rules, with effect from the afternoon of the 31st July 1931.

Calcutta-Howrah.—No. 513.—4th August 1931.—Babu Saurendra Nath Sen, Probationary Sub-Registrar of Calcutta, is appointed to act as Joint Sub-Registrar of Howrah, with effect from the date on which he joins the appointment, during the absence, on leave, of Maulvi Abul Khair Muhammad Siddique, Joint Sub-Registrar, or until further orders.

Jalpaiguri.—No. 514.—4th August 1931.—Maulvi Abdur Rashid, Sub-Registrar of Alipur-Duars, in the district of Jalpaiguri, is allowed leave on average pay for one month, under rule 81 (*b*) (*ii*) of the Fundamental Rules, with effect from the 24th July 1931.

Rangpur-Jalpaiguri.—No. 515.—4th August 1931.—Maulvi Muhammad Azfar, Sub-Registrar attached to Rangpur, is appointed to act as Sub-Registrar of Alipur-Duars, in the district of Jalpaiguri, with effect from the date on which he joins the appointment, during the absence, on leave, of Maulvi Abdur Rashid, Sub-Registrar, or until further orders.

Birbhum.—No. 516.—4th August 1931.—Maulvi Muhammad Qumaruzzaman, Sub-Registrar of Rampur Hat, in the district of Birbhum, is allowed leave on average pay for one month, under rule 81 (*b*) (*ii*) of the Fundamental Rules, with effect from the 6th July 1931.

Birbhum.—No. 517.—4th August 1931.—Babu Kashi Nath Hazra, Sub-Registrar attached to Suri, Birbhum, is appointed to act as Sub-Registrar of Rampur Hat in the same district, with effect from the 6th July 1931, during the absence, on leave, of Maulvi Muhammad Qumaruzzaman, the permanent incumbent, or until further orders.

Noakhali.—No. 518.—4th August 1931.—Maulvi Habibur Rahman, No. I, Sub-Registrar of Daganbhuiyan, in the district of Noakhali, is allowed leave on average pay for six days, under rule 81 (*b*) (*ii*) of the Fundamental Rules, with effect from the 8th June 1931.

Chittagong.—No. 519.—4th August 1931.—Babu Nirendra Nath Kanungo, Sub-Registrar attached to Chittagong, is allowed leave on average pay for seven days, under rule 81 (*b*) (*ii*) of the Fundamental Rules, with effect from the 20th June 1931.

Mymensingh.—No. 520.—4th August 1931.—Maulvi Muhammad Ibrahim Husain, Joint Sub-Registrar of Gaffargaon at Bhaluka, in the district of Mymensingh, is allowed leave on average pay for five days, under rule 81 (*b*) (*ii*) of the Fundamental Rules, with effect from the 29th July 1931.

Rajshahi.—No. 521.—4th August 1931.—Maulvi Muhammad Halimazzaman, Sub-Registrar of Mahadebpur, in the district of Rajshahi, under orders of transfer to Natore Joint office at Singra in the same district, is allowed leave on average pay for three months, under rule 81 (*b*) (*ii*) of the Fundamental Rules, with effect from the 6th May 1931.

Rajshahi.—No. 522.—4th August 1931.—Maulvi Tamizuddin Ahmad, Probationary Sub-Registrar, Rajshahi, is appointed to act as Joint Sub-Registrar of Natore at Singra in the same district, with effect from the afternoon of the 13th May 1931, during the absence, on leave, of Maulvi Muhammad Halimazzaman, Sub-Registrar, or until further orders.

Mymensingh.—No. 523.—4th August 1931.—In line 3 of this department notification No. 468, dated the 15th July 1931, published at page 884 in the *Calcutta Gazette* of the 23rd July 1931 (Part I) *for* "is appointed to be Sub-Registrar of Jamalpur" *read* "is appointed to act as Sub-Registrar of Jamalpur."

Jessore.—No. 524.—4th August 1931.—Babu Abani Bhusan Chakrabatti, Sub-Registrar of Muhammadpur, in the district of Jessore, is allowed leave on average pay for four months, under rule 81 (*b*) (*ii*) of the Fundamental Rules, with effect from the afternoon of the 27th May 1931.

Jessore-24-Parganas.—No. 525.—4th August 1931.—Babu Rathindra Nath Biswas, Probationary Sub-Registrar of Alipore, 24-Parganas, is appointed to act as Sub-Registrar of Muhammadpur, in the district of Jessore, with effect from the afternoon of the 27th May 1931, during the absence, on leave, of Babu Abani Bhusan Chakrabatti, Sub-Registrar, or until further orders.

Midnapore.—No. 526.—4th August 1931.—Babu Jaminikanta Bakshi, First Joint Sub-Registrar of Contai, in the district of Midnapore, is allowed leave on average pay for twelve days, under rule 81 (*b*) (*ii*) of the Fundamental Rules, with effect from the 3rd June 1931.

Khulna.—No. 527.—4th August 1931.—Babu Phani Bhusan Ray, Sub-Registrar of Satkhira, in the district of Khulna, is allowed leave on average pay for ten days, under rule 81 (*b*) (*ii*) of the Fundamental Rules, with effect from the 14th May 1931.

Mymensingh.—No. 528.—6th August 1931.—Babu Prafulla Krishna Ghosh, Sub-Registrar of Bajitpur, in the district of Mymensingh, is allowed leave on average pay for fifteen days, under rule 81 (*b*) (*ii*) of the Fundamental Rules, with effect from the 25th May 1931.

Noakhali.—No. 529.—6th August 1931.—Babu Girindra Prasanna Mazumdar, Sub-Registrar of Sonaimuri, in the district of Noakhali, is allowed leave on average pay for one month and one day, under rule 81 (*b*) (*ii*) of the Fundamental Rules, with effect from the 5th June 1931.

Noakhali.—No. 530.—6th August 1931.—Maulvi Ali Ahmad, Sub-Registrar attached to Noakhali, acted as Sub-Registrar of Sonaimuri in the same district from the 5th June 1931 to the 5th July 1931, during the absence, on leave, of Babu Girindra Prasanna Mazumdar, Sub-Registrar.

Bakarganj.—No. 531.—6th August 1931.—Maulvi Muhammad Vilayet Ali Khan, officiating Joint Sub-Registrar of Pirojpur at Kaukhali, in the district of Bakarganj, is allowed leave on average pay for seven days, under Subsidiary Rule 288 framed under rule 104 (*b*) of the Fundamental Rules, with effect from the 18th July 19[illegible]

Jessore.—No. 532.—6th August 1931.—Babu Pramatha Nath Mukharji, Sub-Registrar, on leave, is appointed to be Sub-Registrar of Manirampur, in the district of Jessore.

Dacca.—No. 533.—6th August 1931.—Babu Sukhamay Ray, Sub-Registrar attached to Dacca, is allowed leave on average pay for twenty days, under rule 81 (*b*) (*ii*) of the Fundamental Rules, with effect from the 7th July 1931.

Dacca-Rangpur.—No. 534.—6th August 1931.—Maulvi Naziruddin Muhammad, No. II, Sub-Registrar of Manohardi, in the district of Dacca, under orders of transfer to Chilmari, in the district of Rangpur, is allowed leave on average pay for two months, under rule 81 (*b*) (*ii*) of the Fundamental Rules, with effect from the 29th June 1931.

Dacca.—No. 535.—6th August 1931.—Babu Biraj Mohan Naha, Sub-Registrar attached to Dacca, is appointed to act as Sub-Registrar of Manohardi in the same district, with effect from the 4th July 1931, during the absence, on leave, of Maulvi Naziruddin Muhammad, No. II, Sub-Registrar, or until further orders.

Dacca-Chittagong.—No. 536.—6th August 1931.—Babu Hara Prosad Chakrabatti, Probationary Sub-Registrar of Dacca, while officiating as Sub-Registrar of Adhunagar, in the district of Chittagong, is allowed leave on average pay for twenty-nine. days, under Subsidiary Rule 288 framed under rule 104 (*b*) of the Fundamental Rules, with effect from the 10th May 1931.

Murshidabad.—No. 537.—7th August 1931.—Maulvi Muhammad Mazharul Huq, Sub-Registrar attached to Berhampore, Murshidabad, acted as Sub-Registrar of Domkol-Azimganj in the same district from the 19th May 1931 to the 7th June 1931.

Nadia.—No. 538.—8th August 1931.—This department notification No. 507, dated the 29th July 1931, appointing Babu Narmada Ranjan Das Gupta, Probationary Sub-Registrar of Nadia, to act as Sub-Registrar of Chakdah, Nadia, *vice* Babu Jitendra Kumar Mitra, the permanent incumbent, on leave, is cancelled.

S. AHMED,
Inspector-General of Regn., Bengal.

FINANCE DEPARTMENT.

Audit.

CALCUTTA, THE 7TH AUGUST 1931.

RESOLUTION—No. 3219F.

After careful consideration of the financial position of this Presidency the Governor in Council and acting with his Ministers has decided that the scales of pay of the services and posts the conditions of whose service are determined by the Government of Bengal shall, as far as future recruits are concerned, be reviewed with the object of bringing them into conformity with existing conditions. As this will necessarily take a considerable time to accomplish and as the necessity for reducing provincial expenditure is immediate and imperative, he has further decided that, pending a final decision as to the scales of pay to be adopted in future—

(1) all appointments to vacancies occurring in these services and posts, after the 21st July 1931, shall be made on a provisional basis;

(2) the pay of any person not already holding a substantive appointment under Government, who is appointed to fill such a vacancy, shall be fixed and shall be the initial pay of the vacant post on the present sanctioned scale less 15 *per centum*, except in posts of which the initial pay is less than Rs. 80 a month, provided that the pay to be drawn after the said reduction in a post of which the initial pay is not less than Rs. 80 a month shall not be less than Rs. 80 a month;

(3) an officer already holding a substantive appointment under Government appointed to any such vacancy shall be entitled to the pay admissible to him under the existing rules

less 15 *per centum*, provided that the pay admissible to him after this reduction shall not be less than the pay of his substantive appointment; and

(4) officers provisionally appointed to vacancies under these orders shall retain a lien on their substantive appointment, if any.

All authorities competent to make appointments are requested to make clear to the persons whom they propose to appoint the purport of these orders, in particular that persons so appointed under this provisional arrangement will, subject to any reductions in establishment which may hereafter be ordered and to them displaying fitness for confirmation in Government service, be entitled to the benefit of the conditions in respect of pay and allowances which Government hereafter decide to apply to the service or establishment to which they have been provisionally appointed under these orders.

2. Nothing in these orders shall apply to Police establishment, whether permanent or temporary, enrolled under the Police Act, or to head warders and warders of all grades (including female warders) in the Jail Department.

3. For purposes of audit the following certificate shall in future be attached to all establishment bills:—

Certificate.

Certified that the rates of pay drawn in this bill are those which have been arrived at after reducing the rates admissible under the rules in force prior to 21st July 1931 to the extent laid down in the Bengal Government Resolution No. 3219F., dated the 7th August 1931.

By order of the Governor in Council,

E. N. BLANDY,

Secy. to the Govt. of Bengal.

ADDENDUM AND CORRIGENDUM.

No. 3244F.—8th August 1931.—The following correction, which has been authorised, is published for general information:—

The Fundamental and Subsidiary Rules, 1st Edition (Reprint), 1929.

Page 18—S. R. 15.—Under S. R. 15 *insert* the following as Note 2, numbering the existing one as Note 1:—

NOTE 2.—Under the general or special orders of the Local Government a Government servant may be authorised to proceed beyond his jurisdiction to attend a non-official conference; in such cases a head of a department may fix the travelling allowance at an amount less than that admissible under the rules regulating travelling allowance for journeys on tour.

E. N. BLANDY,

Secy. to the Govt. of Bengal

MARINE DEPARTMENT.

NOTIFICATION

No. 31Mne.—29th July 1931.—The following by-law regulating the discharge of dangerous petroleum in bulk in the Port of Calcutta, made by the Commissioners under sub-section (*1*) of section 126 and section 127 of the Calcutta Port Act, 1890 (Ben. Act III of 1890), subject to the confirmation of the Local Government, is published for general information, as required by sub-section (*4*) of the said section 126.

2. The by-law will be taken into consideration on the expiry of a month after the first publication of this notification in the *Calcutta Gazette*, and any suggestion or objection with regard thereto received by the undersigned within that period will be considered:—

Draft By-law.

"Without the previous permission in writing of the Commissioners, no person shall use or cause to be used steam generated in the boilers of a vessel for the purpose of discharging dangerous petroleum in bulk within the Port.

A breach of this by-law shall be punishable with a fine which may extend to Rs. 500."

E. N. BLANDY,

Secy. to the Govt. of Bengal.

PUBLIC WORKS DEPARTMENT.

Establishment.

NOTIFICATION.

No. 46.—8th August 1931.—Rai Sahib Manindra Nath Sadhu, Assistant Engineer, 2nd Calcutta Division, is granted, under rule 81 (*b*) (*ii*) of the Fundamental Rules, leave on average pay for one month, with effect from the 6th August 1931, or any subsequent date on which he may avail himself of it.

W. J. KERR,

Chief Engineer (offg).

DEPARTMENT OF AGRICULTURE AND INDUSTRIES.

Industries.

NOTIFICATION.

Minister-in-charge: The Hon'ble Khan Bahadur Maulvi K. G. M. Faroqui.

Calcutta.—No. 3408Ind.—5th August 1931.—Dr. R. L. Datta, Industrial Chemist, Bengal, is allowed leave on average pay for one month, under rule 81 (*b*) (*ii*) of the Fundamental Rules, with effect from the 11th August 1931.

Excise.

NOTIFICATIONS.

Minister-in-charge: The Hon'ble Mr. Bijoy Prasad Singh Roy.

Hooghly.—No. 3397Ex.—4th August 1931.—Maulvi Abbas Ali Khan, Inspector of Excise and Salt, Hooghly, was appointed to hold charge of the district from the 17th May to 3rd June 1931, both days inclusive.

Bakarganj-Rangpur.—No 3398Ex. — 4th August 1931.—Mr. H. V. Boilard, Inspector of Excise and Salt in charge, Bakarganj, was on transfer to Rangpur appointed to hold charge of the district.

2. This modifies notification No. 120-T.A.I., dated the 13th May 1931.

Rajshahi.—No. 3424Ex.—6th August 1931.—Babu Ranajit Chandra Chaudhuri, Superintendent of Excise and Salt, Naugoan, Rajshahi, is allowed leave on average pay for fourteen days, under rule 81 (*b*) (*ii*) of the Fundamental Rules, with effect from the 23rd July 1931.

Rajshahi.—No. 3425Ex.—6th August 1931.—Babu Gajendra Nath Kar, Inspector of Excise and Salt, Naugoan, Rajshahi, is appointed to hold charge of the district, during the absence, on leave, of Babu Ranajit Chandra Chaudhuri, or until further orders.

Miscellaneous.

NOTIFICATION.

Minister-in-charge: The Hon'ble Khan Bahadur Maulvi K. G. M. Faroqui.

Calcutta.—No. 3420Mis.—6th August 1931.—Mr. J. C. Sen, Assistant Secretary to the Government of Bengal, Department of Agriculture and Industries, is allowed leave on average pay for fifteen days, under rule 81 (*b*) (*ii*) of the Fundamental Rules, in extension of the leave already granted to him under the orders of the 22nd July 1931.

L. R. Fawcus,
Secy. to the Govt. of Bengal.

REVENUE DEPARTMENT.

Land Revenue.

NOTIFICATIONS.

No. 9560L.R.—4th August 1931.—Under section 4 of the Bengal Survey Act, 1875 (Bengal Act V of 1875), the Governor in Council is pleased to appoint the officers in charge of the subdivisions, noted below, to exercise in their respective subdivisions all the powers of a Collector in respect to such matters under the said Act as may be delegated to them by the Collector:—

Subdivision.		District
Uluberia	..	Howrah.
Jangipur	..	Murshidabad.
Ranaghat	..	Nadia.
Kushtia	..	Do.
Bagerhat	..	Khulna.
Sadar	..	Faridpur.
Madaripur	..	Do.
Goalundo	..	Do.
Tangail	..	Mymensingh.
Sadar	..	Bakarganj.
Bhola	..	Do.
Pirojpur	..	Do.
Sadar	..	Rangpur
Kurigram	..	Do.
Sadar	..	Pabna
Serajganj	..	Do.
Sadar	..	Malda.
Do.	..	Rajshahi
Chandpur	..	Tippera.
Sadar	..	Noakhali.
Feni	..	Do.

Bogra-Birbhum. — No. 9591L.R. — 5th August 1931.—Babu Gadadhar Sing Ray, Sub-Deputy Collector, Bogra, is appointed to be the Cess Revaluation Officer in the district of Birbhum, under the Bengal Cess Act, IX of 1880, with effect from the date on which he may take over charge of his new duties.

Malda-Rangpur. — No. 9662L.R. — 7th August 1931.—Mr. P. D. Martyn, I.C.S., Settlement Officer of Malda, is also appointed to be a Settlement Officer in the district of Rangpur, with effect from the date on which he joins his settlement duties in that district.

Malda-Rangpur. — No. 9663L.R. — 7th August 1931.—Under the provisions of section 3 (*14*) of the Bengal Tenancy Act, 1885 (Act VIII of 1885), Mr. P. D. Martyn, I.C.S., Settlement Officer of Malda, is also authorised to discharge, in the district of Rangpur, the functions of a Revenue Officer, under Chapter X of that Act, so far as they relate to surveys and the preparation of record-of-rights.

He is also vested with the powers of a Settlement Officer, under Chapter VII, Part I, of the rules under the Bengal Tenancy Act, in respect of the aforesaid area.

Rangpur.—No. 9664L.R.—7th August 1931. — Under the provisions of section 3 (*2*) of the Bengal Tenancy Act, 1885 (Act VIII of 1885), Mr. P. D. Martyn, I.C.S., Settlement Officer, Rangpur, is appointed to discharge the functions of a Collector, under section 58 of that Act, in the district of Rangpur.

Rangpur.—No. 9665L.R.—7th August 1931. —Mr. P. D. Martyn, I.C.S., Settlement Officer, Rangpur, is vested with the powers of a Revenue Officer, under section 108 of the Bengal Tenancy Act, 1885 (Act VIII of 1885), in that district, for the purpose of revision of orders passed either by himself or by any other Revenue Officer under him, under sections 105, 105A, 106 or 107 of the said Act.

Rangpur.—No. 9666L.R.—7th August 1931. —In exercise of the powers conferred by section 115B of the Bengal Tenancy Act, 1885 (Act VIII of 1885), the Governor in Council is pleased to empower Mr. P. D. Martyn, I.C.S., Settlement Officer, Rangpur, to make corrections in the record-of-rights prepared in respect of the lands in that district, in accordance with, and subject to, the provisions of the said section.

Rangpur.—No. 9667L.R.—7th August 1931. —Mr. P. D. Martyn, I.C.S., Settlement Officer, Rangpur, is vested with the powers of a Collector under—

(1) the Bengal Land Revenue Settlement Regulation, 1822 (VII of 1822),

(2) the Bengal Land Revenue Settlement Regulation, 1825 (IX of 1825),

(3) the Bengal Land Revenue Assessment (Resumed Lands) Regulation, 1828 (III of 1828), and

(4) the Bengal Land Revenue (Settlement and Deputy Collectors) Regulation, 1833 (IX of 1833), to be exercised in that district.

Rangpur.—No. 9668L.R.—7th August 1931 —In exercise of the powers conferred by section 38 of the Bengal Land Revenue Settlement Regulation, 1822 (Bengal Regulation VII of 1822), the Governor in Council is pleased to order that Mr. P. D. Martyn, I.C.S., shall exercise, in the district of Rangpur, the authority of a Collector under the Bengal Land Revenue Assessment (Resumed Lands) Regulation, 1819 (Bengal Regulation II of 1819).

Burdwan-Hooghly-Howrah. — No. 9683L.R. —7th August 1931.—Babu Purnendu Nath Guha, Sub-Deputy Collector and Assistant Settlement Officer, Burdwan-Hooghly-Howrah, is allowed leave on average pay, under rule 81 (*b*) (*ii*) of the Funadmental Rules, from the 2nd August 1931, or from any subsequent date on which he is relieved of his settlement duties up to the 14th October 1931.

Rajshahi-Bogra. — No. 9687L.R. — 7th August 1931.—Babu Praphulla Chandra Banarji, Sub-Deputy Collector, Naogaon, Rajshahi, is appointed to be Manager of the Jaipur Government Estate in the district of Bogra, with effect from the date on which he assumes charge of his duties.

Land Acquisition.

NOTIFICATIONS.

Noakhali.—No. 9383L.A.—31st July 1931. —Babu Surendra Nath Sarkar, Sadar Subdivisional Officer, Noakhali, is vested with the powers of a Collector under the Land Acquisition Act, 1 of 1894, in that district.

Rangpur.—No. 9385L.A.—31st July 1931. —Maulvi Mahmud Ahmed, Sadar Subdivisional Officer, Rangpur, is vested with the powers of a Collector under the Land Acquisition Act, 1 of 1894, in the district of Rangpur.

Bankura.—No. 9554L.A.—4th August 1931. —Whereas it appears to the Governor in Council that land is likely to be required to be taken by Government at the public expense for a public purpose, viz., for the construction of a leper shed, in the village of Parbatipur, jurisdiction list No. 214, thana Bankura, pargana Chatna, district Bankura, it is hereby notified that for the above purpose a piece of land comprising a part of cadastral plot No. 277 and measuring, more or less, 0·165 of an acre, is likely to be required within the aforesaid village of Parbatipur.

This notification is made, under the provisions of section 4 of Act I of 1894, to all whom it may concern.

A plan of the land may be inspected in the office of the Collector of Bankura.

In exercise of the powers conferred by the aforesaid section, the Governor in Council is pleased to authorise the officers for the time being engaged in the undertaking, with their servants and workmen, to enter upon and survey the land and do all other acts required or permitted by that section.

Any person interested in the above land, who has any objection to the acquisition thereof, may, within thirty days after the date on which public notice of the substance of this notification is given in the locality, file an objection in writing before the Collector of Bankura.

Howrah.—No. 9674L.A.—7th August 1931. —Whereas it appears to the Governor in Council that additional land is likely to be required to be taken by Government at the public expense for a public purpose, viz., for Grand Trunk Road diversion (5th time) in connection with Calcutta Chord Railway Project, in the village of Bally, jurisdiction list No. 1, thana Bally, pargana Boro, district Howrah, it is hereby notified that for the above purpose a piece of land measuring, more or less, 0·0320 of an acre, bounded on the—

North—By the lands acquired under declarations Nos. 6827L.A., dated 29th April 1929, and 7383L.A., dated 11th May 1929, and by the lands of Dhirendra Nath Chatterji and others,

East—By the lands of Dhirendra Nath Chatterji and others and Haridas Das,

South—By the land acquired under declaration No. 6827L.A., dated 29th April 1929,

West—By the lands acquired under declarations Nos. 6827L.A., dated 29th April 1929, and 7383L.A., dated 11th May 1929,

is likely to be required within the aforesaid village of Bally.

This notification is made, under the provisions of section 4 of Act I of 1894,to all whom it may concern.

A plan of the land may be inspected in the office of the Engineer-in-Chief, Calcutta Chord Railway, at Dakhineswar.

In exercise of the powers conferred by the aforesaid section, the Governor in Council is pleased to authorise the officers for the time being engaged in the undertaking, with their servants and workmen, to enter upon and survey the land and do all other acts required or permitted by that section.

Any person interested in the above land, who has any objection to the acquisition thereof, may, within thirty days after the date on which public notice of the substance of this notification is given in the locality, file an objection in writing before the Collector of Howrah.

Howrah.—No. 9680L.A.—7th August 1931. Whereas it appears to the Governor in Council that additional land is likely to be required to be taken by Government at the public expense for a public purpose, viz., for Grand Trunk Road diversion (6th time) in connection with Calcutta Chord Railway Project, in the village of Bally, jurisdiction list No. 1, thana Bally, pargana Boro, district Howrah, it is hereby notified that for the above purpose a piece of land measuring, more or less, 0·0032 of an acre bounded on the—

North and East—By the lands of Sm. Subala Debi and Satish Chandra Chatterjee,

South and West—By the land declared under declaration No. 6827L.A., dated 29th April 1929,

is likely to be required within the aforesaid village of Bally.

This notification is made, under the provisions of section 4 of Act 1 of 1894,to all whom it may concern.

A plan of the land may be inspected in the office of the Engineer-in-Chief, Calcutta Chord Railway, at Dakhineswar.

In exercise of the powers conferred by the aforesaid section, the Governor in Council is pleased to authorise the officers for the time being engaged in the undertaking, with their servants and workmen, to enter upon and survey the land and do all other acts required or permitted by that section.

Any person interested in the above land, who has any objection to the acquisition thereof, may, within thirty days after the date on which public notice of the substance of this notification is given in the locality, file an objection in writing before the Collector of Howrah.

Rajshahi.—No. 9748L.A. — 10th August 1931.—Whereas it appears to the Governor in Council that land is likely to be required to be taken by Government at the expense of the Rajshahi Municipality for a public purpose, viz., for the Mahomedan burial ground in the village of Sopura, jurisdiction list No. 112, thana Boalia, pargana Garerhat, zilla Rajshahi, it is hereby notified that for above purpose a piece of land comprising entire cadastral plots Nos. 777 and 778 of the settlement map of mauza Sopura and measuring, more or less, 4·07 acres is likely to be required within the aforesaid village of Sopura.

This notification is made, under the provisions of section 4 of Act 1 of 1894, to all whom it may concern.

A plan of the land may be inspected in the office of the Collector of Rajshahi.

In exercise of the powers conferred by the aforesaid section, the Governor in Council is pleased to authorise the officers for the time being engaged in the undertaking, with their servants and workmen, to enter upon and survey the land and do all other acts required or permitted by that section.

Any person interested in the above land, who has any objection to the acquisition thereof, may, within thirty days after the date on which public notice of the substance of this notification is given in the locality, file an objection in writing before the Collector of Rajshahi.

Howrah. — No. 9751L.A. — 10th August 1931.—Whereas it appears to the Governor in Council that land is likely to be required to be taken by Government at the expense of the Howrah Municipality for a public purpose, viz., for extension of Malipanchghora nightsoil depot, in the village of Malipanchghora, pargana Paikan, district Howrah, it is hereby notified that for the above purpose a piece of land measuring, more or less, 0·60 of an acre, bounded on the—

North—By the Malipanchghora nightsoil depot,

East—By the land of Bhupati Charan Nandi,

South—By the land of Gobardhan Mondal and Bhupati Charan Nandi,

West—By the land of Sm. Dhandai Goalini,

is likely to be required within the aforesaid village of Malipanchghora.

This notification is made, under the provisions of section 4 of Act I of 1894, to all whom it may concern.

A plan of the land may be inspected in the office of the Collector of Howrah.

In exercise of the powers conferred by the aforesaid section, the Governor in Council is pleased to authorise the officers for the time being engaged in the undertaking, with their servants and workmen, to enter upon and survey the land and do all other acts required or permitted by that section.

Any person interested in the above land, who has any objection to the acquisition thereof, may, within thirty days after the date on which public notice of the substance of this notification is given in the locality, file an objection in writing before the Collector of Howrah.

Noakhali.—No. 9759L.A. — 10th August 1931.—Whereas it appears to the Governor in Council that land is likely to be required to be taken by Government at the public expense for a public purpose, viz., for preservation of a collossal image and its inscribed fragments with the mound at Silua, in the village of Silua-Madyam, thana Chhagalnaya, zilla Noakhali, it is hereby notified that for the above purpose a piece of land measuring, more or less, 0·14 of an acre, bounded on the—

North and South—By the remaining portions of the cadastral survey plots Nos. 964 and 968,

East—By the remaining portion of the cadastral survey plot No. 964,

West—By the remaining portion of the cadastral survey plot No. 968,

is likely to be required within the aforesaid village of Silua-Madyam.

This notification is made, under the provisions of section 4 of Act I of 1894, to all whom it may concern.

A plan of the land may be inspected in the office of the Collector of Noakhali.

In exercise of the powers conferred by the aforesaid section, the Governor in Council is pleased to authorise the officers for the time being engaged in the undertaking, with their servants and workmen, to enter upon and survey the land and do all other acts required or permitted by that section.

Any person interested in the above land, who has any objection to the acquisition thereof, may, within thirty days after the date on which public notice of the substance of this notification is given in the locality, file an objection in writing before the Collector of Noakhali.

DECLARATIONS.

24-Parganas.—No. 9557L.A.—4th August 1931.—Whereas it appears to the Governor in Council that land is required to be taken by Government at the public expense for a public purpose, viz., for the construction of the proposed retired line at Durgapur in mile 186 of 24-Parganas embankment, in the villages of Banamalipur and Narayanpur, jurisdiction list Nos. 20 and 27, thana Pratabnagar, pargana Madanmolla, zilla 24-Parganas, it is hereby declared that for the above purpose a piece of land measuring, more or less, 3·9008 acres, comprising cadastral survey plots Nos. 2697 to 2699 and 2704 and portions of cadastral survey plots Nos. 2595, 2596, 2598, 2599, 2603 to 2605, 2608, 2609, 2640, 2694 to 2696, 2700 to 2703 and 2705 to 2707 in the village of Narayanpur and portion cadastral survey plots Nos. 12 to 15, 20 to 22, 28 to 31, 34 to 36, 39, 40, 121, 122 and 124 in the village of Banamalipur, is required within the aforesaid villages of Banamalipur and Narayanpur.

This declaration is made, under the provisions of section 6, Act I of 1894, to all whom it may concern.

A plan of the land may be inspected in the office of the Executive Engineer, Canals Division, as well as in that of the Land Acquisition Officer, Alipore.

Howrah.—No. 9671L.A.—7th August 1931. —Whereas it appears to the Governor in Council that land is required to be taken by Government at the expense of the Howrah Municipality for a public purpose, viz., for widening some portion of Kailash Bose Lane and easing out the bad corner of the road, in the village of Ramkristopur, pargana Boro, zilla Howrah, it is hereby declared that for the above purpose two pieces of land altogether measuring, more or less, 0·006 of an acre, bounded on the—

Plot No. 1:

North—By Kailash Chandra Bose Lane and land of Atul Chandra Sen,

South and East—By Kailash Chandra Bose Lane,

West—By land of Atul Chandra Sen,

Plot No. 2:

North and West—By Kailash Chandra Bose Lane,
South—By land of Satish Chandra Bose,
East—By lands and building of Jnan Chandra Ganguli,

are required within the aforesaid village of Ramkristopur.

This declaration is made, under the provisions of section 6 of Act I of 1894, to all whom it may concern.

A plan of the land may be inspected in the office of the Collector of Howrah.

Burdwan. — No. 9677L.A. — 7th August 1931.—Whereas it appears to the Governor in Council that land is required to be taken by Government at the public expense for a public purpose, viz., for constructing Kander Drainage Cut in connection with the Damodar Canal Project, in the village of Bhasapur, jurisdiction list No. 76, in thana Galsi, pargana Burdwan, district Burdwan, it is hereby declared that for the above purpose two pieces of land comprising parts of cadastral plots Nos. 92 and 93 and altogether measuring, more or less, 0·60 of an acre, are required within the aforesaid village of Bhasapur.

This declaration is made, under the provisions of section 6 of Act I of 1894, to all whom it may concern.

A plan of the land may be inspected in the office of the Special Land Acquisition Deputy Collector, Burdwan, as well as in that of the Executive Engineer, Damodar Canal Division, Burdwan.

Burdwan.—No. 9754L.A. — 10th August 1931.—Whereas it appears to the Governor in Council that land is required to be taken by Government at the public expense for a public purpose, viz., for constructing distributary No. 1B, Branch Canal, 1st and 2nd mile, up to chainage 10,000 feet, Damodar Canal Project, in the villages of Galsi and Kalyanpur or Bahirkhanya, jurisdiction list Nos. 139 and 144, respectively, in thana Galsi, pargana Bagha, district Burdwan, it is hereby declared that for the above purpose a piece of land measuring, more or less, 8·31 acres, commencing at chainage 0 foot which is the central point of the distributary No. 1, Branch Canal at chainage 13,879 feet of that distributary and proceeding generally towards north through mauzas Galsi and Kalyanpur or Bahirkhanya up to chainage 1,653 feet and then again running towards the north-east through the same mauzas up to chainage 7,140 feet and again towards the east through mauzas Kalyanpur or Bahirkhanya, terminating at chinage 10,000 feet, varying in width from 35 feet to 110 feet and being 9,962 feet 6 inches in length, is required within the aforesaid villages of Galsi and Kalyanpur or Bahirkhanya.

This declaration is made, under the provisions of section 6, Act I of 1894, to all whom it may concern.

A plan of the land may be inspected in the office of the Special Land Acquisition Officer, Burdwan, as well as in that of the Executive Engineer, Damodar Canal Division, Burdwan.

Forests.

NOTIFICATIONS.

Chittagong.—No. 9553For.—4th August 1931.—Under the provisions of section 20 of the Indian Forest Act, 1927 (Act XVI of 1927), the Governor in Council declares that the area comprised in the revisional survey plots specified in the schedule below is reserved forest, to be called "Sarnia reserved forest," with effect from the 1st October 1931. The total area is 776·63 acres.

Schedule.

District Chittagong, thana Satkania.

Mauza with J. L. No.	Revisional survey plots.	Area in acres.
Sarnia, J. L. No. 113.	594, 596, 604, 607, 1039, 1084, 1087, 1089, 1090, 1095, 1100, 1106, 1204, 1345, 1389, 1395, 1396, 1398, 1402, 1415, 1424, 1425, 1426, 1447, 1448, 1449, 1450, 1451, 1452, 1453, 1454, 1455, 1464 and 1480.	776·63

Chittagong.—No. 9658For. — 7th August 1931.—Under the provisions of section 20 of the Indian Forest Act, 1927 (Act XVI of 1927), the Governor in Council declares that the area comprised in the revisional survey plots specified in the schedule below is reserved forest, to be called "Uttar Kanchannagar reserved forest," with effect from the 1st October 1931. The total aera is 3,433·94 acres.

Schedule.

District Chittagong, thana Phatikchari.

Name of mauza with J. L. No.	Revisional Survey plots.	Area in acres.
Uttar Kanchannagar, J. L. No. 62.	1, 2, 3, 4, 5, 6, 19, 20, 24, 51, 52, 116, 139, 146, 147, 148, 149, 150, 151, 152, 153, 154, 155, 156, 157, 158, 159, 160, 169, 172, 173, 174, 175, 177, 250, 253, 254, 255, 256, 257, 258, 259, 260, 261, 264, 266, 268, 269, 272, 278, 284, 286, 287, 291, 292, 298, 302, 303, 401, 402, 477, 478, 479, 480, 482, 484, 485, 487, 563, 564, 575, 576, 577, 578, 582, 586, 588, 602, 603, 608, 616, 624, 625, 626, 670, 671, 672, 673, 674, 675, 701, 722, 1443, 1444, 1907, 2688, 2689, 2766, 2768, 2770, 2773, 3201, 3202, 3203, 3241, 3257, 3340, 3414, 3430, 3437, 3440, 3458, 3461, 3463, 3466, 3468, 3471, 3476, 3481, 3482, 3484, 3757, 3762, 3763, 3781, 3794 and 3795.	3,433·94

Excluded Area.

NOTIFICATIONS

Darjeeling.—No. 9659E.A.—7th August 1931.—In exercise of the power conferred by sub-section (2) of section 1 of the Bengal Food Adulteration (Amendment) Act, 1930 (Bengal Act V of 1930), the Governor in Council is pleased to direct that the whole of the said Act shall come into force in the district of Darjeeling on the 1st September 1931.

Darjeeling.—No 9550E.A. — 4th August 1931.—In exercise of the power conferred by section 15 of the Bengal Municipal Act, 1884 (Bengal Act III of 1884), the Governor in Council is pleased to direct that—

(1) the Darjeeling Municipality in the district of Darjeeling shall, for the purpose of the election of Commissioners, be divided into nine wards as shown in columns 1, 2 and 3 of the following table, and

(2) the number of Commissioners to be elected for each such ward shall be that shown in column 4 of the table :—

No of ward.	Name of ward	Boundaries of ward	Number of commissioners to be elected for each ward.
1	2	3	4
I	Ghoom ..	The whole of Ghoom and Jorbungalow within municipal limits including the land on the west, bounded on the east by the Cantonment boundary to a point where it meets the northern boundary of the Retreat : along the northern boundary of the Retreat to the Cart Road from the Cart Road a line due west to the municipal boundary on the east the land bounded on the west by the Cantonment boundary as far as Cantonment boundary pillar No. 140 : from Cantonment boundary pillar 140 a straight line to the point of junction of the western municipal boundary and Mount Vernon Jhora	3
II	Colinton ..	From the Cantonment boundary pillar No 140 along a straight line to the point of junction of the eastern municipal boundary and Mount Vernon Jhora along the eastern municipal boundary to its junction with the Dingle Jhora : along the Dingle Jhora up to the municipal pipe line . along the municipal water-pipe line to include the municipal (St Paul's School) water reservoir along the municipal steps from the reservoir to the eastern Jalapahar Road along the eastern Jalapahar Road to Eden Falls Road along Eden Falls Road to the source of North Kagjhora : along North Kagjhora to Victoria Falls along Kagjhora to its junction with the municipal boundary on the west along the western municipal boundary to the point that is intersected by the boundary of Ward No 1 along a line due east to the Cart Road to meet the northern boundary of the Retreat along the northern boundary of the Retreat to its junction with the Cantonment boundary along the Cantonment boundary up to Cantonment boundary pillar No. 140.	2
III	Club ..	From the junction of the Dingle Jhora and the eastern municipal boundary along the Dingle Jhora to the municipal pipe line along the municipal water pipe line to include the municipal St Paul's reservoir along the municipal steps from the municipal St Paul's reservoir to the Jalapahar Road along the Jalapahar Road to Eden Falls Road along the Eden Falls Road to its junction with North Kagjhora along North Kagjhora to the Cart Road along the Cart Road to Mackenzie Road along Mackenzie Road to Beech wood Road along Beech wood Road to Lloyd's Road along Lloyd's Road to the junction of Robertson Road and Greer Road whence to Commercial Row along Commercial Row to the fountain on the Chowrasta from the fountain on the Chowrasta to the junction of the Rungeet Road and the Chowrasta from the junction of the Rungeet Road and the Chowrasta along the Chowrasta Jhora to its junction with the eastern municipal boundary along the eastern municipal boundary to the Dingle Jhora	2
IV	Chandmari ..	From the junction of the Jiten Jhora and the Cart Road along the Cart Road to the Hospital Jhora along the Hospital Jhora to the western municipal boundary along the western municipal boundary to Kagjhora along Kagjhora to its junction with Jiten Jhora	3
V	Butcher Busty	From the junction of the Cart Road and North Kagjhora along North Kagjhora to the Victoria Falls along Kagjhora to its junction with the Jiten Jhora along Jiten Jhora to its junction with the Cart Road along the Cart Road to the junction of Cart Road and North Kagjhora	2
VI	Bazar ..	From the Hospital Jhora at the junction of the Mount Pleasant and Post Office Road : along Post Office Road to Lloyd's Road along Lloyd's Road to Beechwood Road : along Beechwood Road to Mackenzie Road along Mackenzie Road to the Cart Road along the Cart Road to the Hospital Jhora along the Hospital Jhora to the junction of the Mount Pleasant and Post Office Road	3
VII	Birch Hill ..	From the junction of Rungeet Road and the Chowrasta along the Last Mall Road to the junction of the Mall Road and Government House eastern boundary along the Government House eastern boundary to the eastern Birch Hill Road : along the east Birch Hill Road to Snowy View Road along Snowy View Road to Rivers Hill Road along Rivers Hill Road to West Birch Hill Road along West Birch Hill Road to the northern boundary of the old cemetery along the northern boundary of the old cemetery to the Lebong Cart Road along the Lebong Cart Road to the Hospital Jhora along the Hospital Jhora to the junction of the Mount Pleasant and Post Office Road along the Post Office Road to Mackenzie Road along Mackenzie Road to Commercial Row along Commercial Row to the fountain on the Chowrasta from the fountain on the Chowrasta to the point of junction of the Rungeet Road and Chowrasta.	1

No. of ward.	Name of ward.	Boundaries of ward.	Number of commissioners to be elected for each ward.
1	2	3	4
VIII	Bhutia Busty	From the junction of the Chowrasta Jhora and the eastern municipal boundary along the Chowrasta Jhora to the point of junction of Rungeet Road and the Chowrasta : along East Mall Road to the junction of the Mall Road and the East Government House boundary : along the East Government House boundary to the East Birch Hill Road : along the East Birch Hill Road to Ray Villa Road : along Ray Villa Road to the Cart Road . from the junction of the Cart Road and the Ray Villa Road : along the Cart Road due west to the first Jhora : along the first Jhora to the municipal boundary : along the municipal boundary to the point of junction of the eastern municipal boundary and the Chowrasta Jhora.	1
IX	Cutchery ..	From the junction of the Hospital Jhora and the western municipal boundary along the Hospital Jhora to the Lebong Cart Road : along the Lebong Cart Road to the northern boundary of the old cemetery : along the northern boundary of the old cemetery to west Birch Hill Road : along the west Birch Hill Road to Rivers Hill Road : along Rivers Hill Road to Snowy View Road : along Snowy View Road to East Birch Hill Road : along East Birch Hill Road to Ray Villa Road : along Ray Villa Road to the Lebong Cart Road. From the point of junction of the Ray Villa Road and the Cart Road along the Cart Road due west to the first Jhora : along the Jhora to the municipal boundary : along the municipal boundary to its junction with the Hospital Jhora.	

2. This cancels notification No. 1467M., dated the 15th April 1916, published at pages 147-149, Part IB of the *Calcutta Gazette*, dated the 19th April 1916.

H. C. V. PHILPOT,
Secy. to the Govt. of Bengal.

IRRIGATION DEPARTMENT.

Irrigation.

NOTIFICATION.

No. 161.—17th July 1931.—The following draft of amendments, which, in exercise of the powers conferred by sections 6 and 11 of the Canals Act, 1864 (Bengal Act V of 1864), the Governor in Council intends to make, in the rules and schedule of rates of tolls for the Rampur Bil Khal joining the Gazipur Khal at Gazipur and Chechri on the north and Amua Done at Amua on the south in the district of Bakarganj (published in Bengal Government notification No. 131., dated the 7th April 1931, at pages 450-51, Part I of the *Calcutta Gazette* of the 16th idem), is hereby published for the information of persons likely to be affected thereby.

2. The draft will be taken into consideration on or after the 10th September 1931, and any objections or suggestions received by the undersigned before that date will be considered:—

Draft amendments.

Schedule of rates of tolls.

Insert the words "and Chechri" after the words "at Amua" at the end of the last line of rule 12 of the said rules.

H. C. V. PHILPOT,
Secy. to the Govt. of Bengal.

HIGH COURT NOTICES.

Original Side.

Calcutta, the 4th August 1931.

The Hon'ble the Chief Justice has granted Mr. Maurice Remfry, Registrar, High Court, Original Side, leave from the 28th August 1931 to the 10th September 1931, under article 232 of the Civil Service Regulations, viz., privilege leave on full pay for two days under article 274 of the Civil Service Regulations and furlough on average salary for the remaining period, under article 325 of the Civil Service Regulations with liberty to affix the annual vacation of 1931, and has appointed Mr. N. Ghatak, Master and Official Referee, High Court, Original Side, to officiate as Registrar in place of Mr. Remfry from the 28th August 1931 to the 10th September 1931.

By order,
MAURICE REMFRY, *Registrar.*

Calcutta Bar Council.

The 3rd August 1931.

Under rule 14 of the rules framed under the Indian Bar Councils Act, 1926, I hereby declare the following to have been elected to the Bar Council constituted for the High Court of Judicature at Fort William in Bengal:—

Mr. A. K. Roy, Barrister-at-Law.
Mr. S. C. Bose, Barrister-at-Law.
Mr. S. N. Banerjee, Barrister-at-Law.
Mr. D. N. Basu, Barrister-at-Law.
Mr. A. N. Chaudhuri, Barrister-at-Law.
Mr. Rupendra Kumar Mitter, Advocate.
Dr. Bijan Kumar Mukherjee, Advocate.
Mr. Amarendra Nath Bose, Advocate.
Dr. Naresh Chandra Sen-Gupta, Advocate.
Mr. Sarat Chandra Bose, Advocate.

S. K. DUTT,
for *Secretary, Calcutta Bar Council.*

I certify that the abovenamed gentlemen have been duly elected.

A. K. ROY,
Advocate-General (offg.).

SMALL CAUSE COURT NOTICE.

The 3rd August 1931.

Notice is hereby given, under Act IX of 1887, that the Judge of Small Cause Court, Dacca and Munshigunge, will, in the month of August 1931, sit in the Courts on the undermentioned dates:—

In Munshigunge Small Cause Court—From 24th to 29th August 1931.

In Dacca Small Cause Court—The rest of the working days of the month.

S. SIL,
Small Cause Court Judge.

ORDERS BY COMMISSIONERS OF DIVISIONS.

Burdwan Division—Chinsura.

No. 1526L.S.-G.—3rd August 1931.—The following draft amendment to the existing by-laws of the Burdwan district board (confirmed by the Commissioner, Burdwan Division, in notification dated the 1st July 1912 and published at page 1248, Part I of the *Calcutta Gazette*, dated the 24th July 1912) as finally adopted by that board at its meeting of the 25th July 1930, are published under rule 6 of the rules issued under Government notification No. 764 T.M., dated the 7th September 1930, for general information.

2. The proposed amendment will be taken into consideration on or after the 15th September 1931 for the purpose of confirmation, and any objection or suggestion which may be received by the undersigned before that date will be duly considered:—

Delete ";" after the words "union committee" in the definition of the term "road" in clause 4 of by-law No. 1 and *add* "or a road transferred to a union board for management under section 33 of the Village Self-Government Act, 1919, but not the roads constructed and maintained by union boards under section 31 of the Act."

No. 1531L.S.-G.—3rd August 1931.—The following draft amendment to the existing by-laws of the Birbhum district board (confirmed by the Commissioner, Burdwan Division, in notification dated the 1st May 1912 and published at page 863, Part I of the *Calcutta Gazette*, dated the 8th May 1912) as finally adopted by that board at its meeting of the 29th March 1930, are published under rule 6 of the rules issued under Government notification No. 764T.M., dated the 7th September 1910, for general information.

2. The proposed amendment will be taken into consideration on or after the 15th September 1931 for the purpose of confirmation, and any objection or suggestion which may be received by the undersigned before that date will be duly considered:—

Delete ";" after the word "road" in clause 4 (*a*) of by-law No. 1 and *add* "and roads transferred to union boards for management under section 33 of the Village Self-Government Act, 1919."

L. B. BURROWS, *Commissioner (offg.).*

Suri, the 5th August 1931.

No. 7L.S.-G.—It is hereby notified for general information that, under section 13 of the Bengal Village Self-Government Act, 1919 (Bengal Act V of 1919), read with rule 35 of the rules for the election and appointment of members of union boards, etc., Babu Satyendra Kumar Roy has been duly elected to be a member for Ward No. I of the Darka union board in police-station Labpur, in the Sadar subdivision of the district of Birbhum, *vice* Babu Gourish Ch. Roy, removed.

G. S. DUTT,
Dist. Magte., Birbhum.

Chittagong Division—Chittagong.

Noakhali, the 31st July 1931.

No. 7650J.—It is hereby notified for general information that, under section 13 of the Bengal Village Self-Government Act, 1919 (Bengal Act V of 1919), read with rule 35 of the rules for the election and appointment of members of union boards, Maulvi Abdul Hamid Patwari has been duly elected to be a member of the Paniala union board No. II, police-station Ramgonj, in the Sadar subdivision of the district of Noakhali, *vice* Babu Monomohan Majumdar, deceased.

No. 7652J.—It is hereby notified for general information that, under section 13 of the Bengal Village Self-Government Act, 1919 (Bengal Act V of 1919), read with rule 35 of the rules for the election and appointment of members of union boards, Hajee Shekh Mahammad Eshaque Mean has been duly elected to be a member of the Sonagazi union board No. VI, police-station Sonagazi in the Feni subdivision of the district of Noakhali, *vice* Munshi Abdul Samad Mean, deceased.

B. R. SEN, *District Magistrate.*

Dacca Division—Dacca.

No. 3935J.—3rd August 1931.—Maulvi Aftabuddin Ahmad, Sub-Deputy Collector, on leave, is posted to the headquarters station of the district of Bakarganj on general duty.

No. 4006J.—6th August 1931.—It is hereby notified for general information that at the general election held on the 4th July 1931, the following gentlemen were duly elected to be the Commissioners of the Faridpur Municipality for the several wards noted above their names:—

Ward No. I.

Babu Satish Chandra Dutt.
Babu Suresh Chandra Nath.
Babu Satya Ranjan Ghose, B.SC., M.B.

Ward No. II.

Babu Surendra Nath Roy, M.A., B.L.
Babu Kiron Chandra Roy, M.B.

Ward No. III.

Babu Joges Chandra Basu Mazumdar, B.L.
Rai Tarak Chandra Chatterjee Bahadur.

Ward No. IV.

Choudhury Moazzem Ali Biswas.
Babu Rebati Kumar Bose.

Ward No. V.

Babu Abani Mohan Chakrabortti, M.A.
Babu Kiron Chandra Biswas.
Babu Nibaran Chandra Roy.

No. 4034J.—7th August 1931.—It is hereby notified for general information that, under rule 20 (*b*) of the manual of rules for the management of charitable hospitals and dispensaries in Bengal, the following gentlemen are appointed to be members of the committee for the management of the charitable dispensary at Sherpur in the district of Mymensingh:—

The Subdivisional Officer, Jamalpur (*ex-officio*).
The Munsif, Sherpur (*ex-officio*).
Babu Hiran Chandra Chaudhuri.
Babu Satindra Kumar Chaudhuri.
Babu Satyendra Mohan Chaudhuri, B.A., B.SC.
Babu Woomesh Chandra Rai.
Babu Kshitindra Chandra Gupta, B.A.
Babu Hem Chandra Das.
Babu Probodh Chandra Nag, M.B.
Babu Aswini Kumar Naha.
Munshi Muhammad Rahamatulla.
Munshi Muhammad Afsarali.

A. CASSELLS, *Commissioner (offg.)*.

Presidency Division—Calcutta.

No. 1310R.G.—31st July 1931.—Babu Rajendra Narayan Rakshit, Sub-Deputy Collector, Sadar, Jessore, is transferred to Baraset, 24-Parganas.

No. 1316R.G. — 31st July 1931.—Babu Amulya Bhusan Mukharji, Sub-Deputy Collector, Baraset, 24-Parganas, is transferred to Jessore Sadar.

No. 1992L.S.-G.—1st August 1931.—It is hereby notified for general information that, under section 19 (*2*) of the Bengal Local Self-Government Act, III (B.C.) of 1885, as amended, Babu Gagon Chandra Biswas has been appointed to be a member of the Sadar local board, Nadia, in place of Babu Kanai Lal Sinha Roy, removed.

No. 1305R.G.—1st August 1931.—Babu Ashutosh Banerjee, Sub-Deputy Collector, Sadar, Nadia, is granted leave on average pay for six weeks, under rule 81 (*b*) (*ii*) of the Fundamental Rules, with effect from the 4th July 1931.

No. 1297R.G.—3rd August 1931.—Babu Hemanta Kumar Kar, Sub-Deputy Collector and Circle Officer, Jangipur, on leave, is posted temporarily to the headquarters station of the district of Murshidabad.

Corrigendum. — No. 2004L.S.-G. — 3rd August 1931.—In notification No. 1668L.S.-G., dated 19th June 1931, issued by the Commissioner of the Presidency Division, Calcutta, and published at page 782, Part I of the *Calcutta Gazette* of the 2nd July 1931, *read* "Quazi Abul Barkat" *for* "Quazi Abdul Barkat" under thana "Barwan" in the Kandi local board.

No. 1437M.—4th August 1931.—It is hereby notified for general information that Monday, the 21st September 1931, has been fixed as the date for holding a by-election in Ward No. III of the Debhatta Municipality, in the district of Khulna, to elect a Commissioner for that ward, in place of Babu Krishna Das Ghose, resigned.

No. 1254L.S.-G.—5th August 1931.—It is hereby notified for general information that—

(*a*) Under sub-section (*2*) of section 6 of the Bengal Village Self-Government Act, 1919 (Bengal Act V of 1919), the gentlemen as per list A have been duly elected to be members of the several union boards in police-station Ranaghat in the Ranaghat subdivision of the Nadia district.

(*b*) Under sub-section (*3*) of section 6 of the Act, the gentlemen as per list B have been appointed by the District Magistrate of Nadia to be members of the said union boards—

List A.

Ranaghat thana.

Majergram union board.

Ward I

M. Maijaddi Mondal.

Ward II.

Babu Satish Chandra Biswas.

Ward III.

M. Golam Robbani Mondal.

Ward IV.

M. Helai Mondal.

Ward V.

Babu Taranath Mukherji.
Babu Haridas Roy Chaudhury.

Raghunathpur union board.

Ward I.

Babu Charu Chandra Bhattacherji.

Ward II.

M. Nepal Khan.

Ward III.

Babu Nagendra Nath Ghose.

Ward IV.

M. Abdul Jubbar.

Ward V.

M. Abdul Gaffur.
M. Eusofali Golder.

Habipur union board.

Ward I.

Babu Sidhu Gopal Dutta.
Babu Gour Gopal Sinha.

Ward II.

Babu Sauti Kumar Baksi.

Ward III.

Babu Nani Gopal Rajbanshi.

Ward IV.

Babu Nani Gopal Ghose.
Babu Radhika Prasad Ghose.

Nowpara union board.

Ward I.

Babu Surendra Nath Haldar.

Ward II.

Babu Kanti Chandra Biswas.

Ward III.

Babu Khagendra Nath Tarafdar.
Babu Kali Bhusan Bhattacherjee.

Ward IV.

Babu Satya Charan Chakraverty.

Ward V.

Babu Rajani Kanta Mondal.

List B.

Ranaghat thana.

Majergram union board.

Babu Surendra Nath Chatterjee.
Babu Provash Chandra Bhattacherjee.
M. Pear Mondal.

Raghunathpur union board.

Babu Surya Narain Roy.
Babu Birendra Narain Roy.
M. Chader Mondal.

Habipur union board.

Babu Ashutosh Dutta
Babu Hazari Lal Banerjee.
M. Tofeluddin Sheik.

Nowpara union board.

Babu Bibhuti Bhuson Chakravarty.
Babu Amulya Kumar Chatterjee.
M. Rasik Gazi.

No. 1343R.G.—5th August 1931.—Babu Ratan Lal Das Gupta, Sub-Deputy Collector, on leave, is posted to the headquarters station of the district of the 24-Parganas

No. 1349R.G.—5th August 1931.—Babu Ramani Ranjan Dutta, Sub-Deputy Collector, Sadar, 24-Parganas, was transferred temporarily to the Diamond Harbour subdivision of that district from the 12th to the 30th June 1931.

F. W. ROBERTSON, *Commissioner (offg.).*

Krishnagar, the 7th August 1931.

No. 4941J.G.—It is hereby notified for general information that, under section 13 of the Bengal Village Self-Government Act, 1919 (Bengal Act V of 1919), read with rule 35 of the rules for the election and appointment of members of union boards under the said Act, Babu Nilmony Karmaker and Babu Saroj Ranjan Bakshi have been duly elected to be members of Ward Nos. I and II, respectively, of the Swarupganj-Pansilla union board in police-station Nabadwip in the Sadar subdivision of the Nadia district, in place of Babus Narendra Kumar Sarkar and Aswini Kumar Mondol, respectively resigned and deceased.

It is hereby notified for general information that, under section 13 of the Bengal Village Self-Government Act, 1919 (Bengal Act V of 1919), read with rule 35 of the rules for the election and appointment of members of union boards under the said Act, Munshi Yusufali Shaik has been elected to be a member of the Bhandarkhola union board in police-station Krishnagar in the Sadar subdivision of the Nadia district, in place of Munshi Ahadali Biswas, deceased.

It is hereby notified for general information that, under section 13 of the Bengal Village Self-Government Act, 1919 (Bengal Act V of 1919), read with rule 36 of the rules for the election and appointment of members of union boards under the said Act, Munshi Manik Biswas and Babu Biswanath Ghosh have been appointed to be members of the Gazna union board in police-station Hanskhali in the Sadar subdivision of the Nadia district, in place of Munshi Rabbani Mondol and Babu Balai Karmakar, removed, respectively.

It is hereby notified for general information that, under section 13 of the Bengal Village Self-Government Act, 1919 (Bengal Act V of 1919), read with rule 35 of the rules for the election and appointment of members of union boards under the said Act, Babu Monmotho Nath Bordhon has been duly elected to be a member of the Taldah-Majdia union board in police-station Krishnaganj in the Sadar subdivision of the Nadia district, in place of Babu Nanda Gopal Bhaduri, resigned.

It is hereby notified for general information that, under section 13 of the Bengal Village Self-Government Act, 1919 (Bengal Act V of 1919), read with rule 36 of the rules for the election and appointment of members of union boards under the said Act, Babu Priya Nath Roy has been appointed to be a member of the Dignagar union board in police-station Krishnagar in the Sadar subdivision of the Nadia district, in place of Babu Jatindra Nath Chakravarty, resigned.

T. C. ROY,
Dist. Magistrate, Nadia.

Alipore, the 6th August 1931.

It is hereby notified for general information that, under sub-section (*3*) of section 6 of the Bengal Village Self-Government Act, 1919 (Bengal Act V of 1919), the following gentleman has been appointed by the District Magistrate of 24-Parganas to be a member of the Chaltabaria union board in police-station Bhangore in the Sadar subdivision of the 24-Parganas district, in place of Babu Panchanan Ghosh, deceased:—

Babu Jnanada Prasad Mukharji.

K. L. MUKHARJI,

Addl. District Magistrate, 24-Parganas.

Rajshahi Division—Jalpaiguri.

No. 2713M.—4th August 1931.—It is hereby notified for general information that at the by-election held on Saturday, the 18th July 1931, Shaikh Shah Mohamed Ali was duly elected as a Commissioner of Ward No. II of the Gaibandha Municipality in the district of Rangpur, *vice* Maulvi Ahamedjan Khan, deceased.

No. 2742M.—6th August 1931.—It is hereby notified for general information that the next general election of the Commissioners of the Old Malda Municipality in the district of Malda will be held on Monday, the 12th October 1931.

No. 2745M.—6th August 1931.—It is hereby notified for general information that the next general election of the Commissioners of the English Bazar Municipality in the district of Malda will be held on Saturday, the 3rd October 1931.

J. G. DRUMMOND, *Commissioner (offg.).*

Dinajpur, the 3rd August 1931.

No. 4449J.—It is hereby notified for general information that, under section 13 of the Bengal Village Self-Government Act, 1919 (Bengal Act V of 1919), Munshi Basiruddin Ahamed of Angerpara has been appointed to be a member of the Angerpara union board No. III in the police-station Khansama in the Thakurgaon subdivision of the district of Dinajpur, *vice* Munshi Amantulla Shaha of Angerpara, deceased.

No. 4451J.—It is hereby notified for general information that, under section 13 of the Bengal Village Self-Government Act, 1919 (Bengal Act V of 1919), Maulvi Ashraffjan Sarker of Bherbheri has been appointed to be a member of the Bherbheri union board No. II in the police-station Khansama in the Thakurgaon subdivision of the district of Dinajpur, *vice* Babu Radha Gobinda Sarker of Bherbheri, resigned.

No. 4452J.—It is hereby notified for general information that, under section 13 of the Bengal Village Self-Government Act, 1919 (Bengal Act V of 1919), Munshi Masiruddin Sarker of Goaldihi has been appointed to be a member of the Goaldihi union board No. VI in the Khansama police-station in the Thakurgaon subdivision of the district of Dinajpur, *vice* Babu Kalidas Pandit of Goaldihi, deceased.

L. C. GUHA, *District Magistrate*

The Calcutta Gazette

THURSDAY, AUGUST 13, 1931.

Part I A

Orders and Notifications by the Government of India republished for general information.

HOME DEPARTMENT.

NOTIFICATIONS.

JUDICIAL.

Simla, the 30th July 1931.

No. F. 435/31.—The Hon'ble Sir G. C. Rankin, Kt., Barrister-at-Law, Chief Justice of the High Court of Judicature at Fort William in Bengal, is granted leave on full allowance from the 8th August to the 10th September 1931, both days inclusive.

No. F. 435/31-I.—The Hon'ble Sir G. C. Rankin, Kt., Barrister-at-Law, Chief Justice of the High Court of Judicature at Fort William in Bengal, having been granted leave on full allowance from the 8th August to the 10th September 1931, both days inclusive, the Governor-General in Council is pleased, under the provisions of sub-section (1) of section 105 of the Government of India Act, to appoint the Hon'ble Mr. Justice Charu Chander Ghose, Kt., Barrister-at-Law, one of the Judges of the High Court, to perform the duties of Chief Justice during the absence of the Hon'ble Sir G. C. Rankin, or until further orders.

H. W. EMERSON,
Secy. to the Govt. of India.

FOREIGN AND POLITICAL DEPARTMENT.

NOTIFICATIONS.

Simla, the 30th July 1931.

No. 468-I.—In exercise of the powers conferred by the Indian (Foreign Jurisdiction) Order in Council, 1902, and of all other powers enabling him in that behalf, the Governor-General in Council is pleased to appoint Major K. A. G. Evans-Gordon, I.A., Vice-President of the Council of Regency, Cooch Behar State, being a European British subject, to be a Justice of the Peace within the State of Cooch Behar.

C. C. WATSON,
Pol. Secy. to the Govt. of India.

The 28th July 1931.

No. 458-G.—The Governor-General in Council is pleased to recognise provisionally the appointment of Dr. Dharma Das Ghose as Honorary Vice-Consul for Spain at Calcutta.

E. B. HOWELL,
Foreign Secy. to the Govt. of India.

ARMY DEPARTMENT.

Simla, the 1st August 1931.

Part B.

No. 471.—The following appointments are made:—

AUXILIARY FORCE, INDIA.

* * * *

The undermentioned officers designate of the Army in India Reserve of Officers are granted tempy. commissions for the periods noted against their names:—

Northern Bengal Mounted Rifles.

To be Lt.

Aleck Apcar. From 17th Feb. to 4th Mar. 1931.

* * * *

G. M. YOUNG,
Secy. to the Govt. of India.

RAILWAY DEPARTMENT.

Railway Board.

NOTIFICATION.

Simla, the 28th July 1931.

No. 6245-F.—In pursuance of sub-section (1) of section 135 of the Indian Railways Act, 1890 (IX of 1890), the Governor-General in

Council is pleased to declare that the administration of the Assam Bengal Railway shall be liable to pay in aid of the funds of the local authority set out in the first column of the schedule annexed hereto the tax specified in the second column thereof.

Schedule.

Local authority.	Tax.
1	2
Jorhat Municipality ..	Holding tax.

J. F. BLACKWOOD,
Secretary, Railway Board.

DEPARTMENT OF COMMERCE.

NOTIFICATION.

MERCHANT SHIPPING.

Simla, the 1st August 1931.

No. 31-M. II/30.—In pursuance of clause (*f*) of sub-section (2) of section 28 of the Indian Merchant Shipping Act, 1923 (XXI of 1923), and in supersession of all pervious orders on the subject, the Governor-General in Council is pleased to fix the following scales of the provisions to be furnished to lascars or other native seamen engaged on foreign-going ships, namely:—

General Scale applicable to crews engaged at ports other than ports in the Bombay Presidency.

——	Ordinary.	Cold weather.
	lbs. oz. drs	lbs. oz. drs.
Rice daily	1 6 0	1 6 0
Flour daily	0 10 0	0 10 0
Dal daily	0 6 0	0 6 0
Ghee daily	0 2 0	0 3 0
Salt daily	0 0 8	0 0 8
Curry stuff daily	0 1 0	0 1 0
Dry fish at sea, on 5 days a week	0 4 0	..
Dry fish at sea, on 3 days a week	..	0 4 0
Fresh meat free from bone at sea, on 2 days a week ..	0 4 0	..
Fresh meat free from bone at sea, on 4 days a week ..	..	0 4 0
Fresh meat free from bone in harbour, daily	0 4 0	0 4 0
Vegetables, dry, at sea, such as onions, potatoes, daily ..	0 6 0	0 6 0
Vegetables, fresh, in harbour, daily	0 8 0	0 8 0
Tamarind daily	0 1 0	0 1 0
Tea daily	0 0 4	0 0 8
Sugar daily	0 1 8	0 2 0
Condensed milk, per week ..	0 4 0	0 4 0
Lime-juice daily	0 1 0	0 1 0
Oil (mustard) daily .	0 0 12	0 0 12
Water as required	.	..

Special Scale applicable to crews engaged at ports in the Bombay Presidency.

——	Ordinary.	Cold weather.
	lbs. oz. drs.	lbs. oz. drs.
Rice daily .. .	1 8 0	1 8 0
Flour daily .. .	0 10 0	0 10 0
Dal daily	0 4 0	0 4 0
Ghee daily	0 2 0	0 3 0
Salt daily	0 0 8	0 0 8
Curry stuff (including kokam or tamarind) daily ..	0 0 10	0 0 10
Dry fish, at sea, daily ..	0 4 0	0 4 0
Fresh meat free from bone at sea, on 2 days in the week ..	0 4 0	0 8 0
Vegetables, dry at sea and fresh in harbour, daily ..	0 8 0	0 8 0
Fresh meat free from bone in harbour, daily	0 4 0	0 4 0
Tea daily	0 0 4	0 0 8
Sugar daily	0 1 8	0 2 0
Condensed milk, per week .	0 4 0	0 4 0
Lime-juice daily	0 1 0	0 1 0
Water as required ..	..	

NOTE.—In bad weather, when unable to cook, 6½ oz. biscuits and 2 oz. sugar in addition to the quantity provided in the scale, may be substituted in the place of rice and dal.

When a lascar is ill and off duty, biscuits, tea and sugar should be given to him with arrowroot or sago as needed.

The daily allowance of lime juice shall be served out to the crew as soon as they have been at sea for ten days and during the remainder of the voyage except during such time as they are in harbour and are there supplied with fresh provisions.

The expression "cold weather" is applicable:—

(*a*) in the Northern Hemisphere during the months October to March inclusive and North of Latitude 20° N. in the China Sea and Pacific Ocean, the Persian Gulf, the Mediterranean and Black Seas, and North of 30° N. in the Atlantic, and

(*b*) in the Southern Hemisphere during the months May to September inclusive and South of 30° S.

A. RAISMAN,
Joint Secy. to the Govt. of India (offg.).

The Calcutta Gazette

THURSDAY, AUGUST 13, 1931.

Part IB

Educational Notices.

Rules for Half-yearly Examination in the Art and Practice of Teaching.

MEMORANDUM.

The half-yearly examination in the Art and Practice of Teaching for the teachers of boys' schools teaching through the medium of English, in the Rajshahi Division, will be held at the Jalpaiguri Zilla School, on Monday, the 5th October 1931, and the day following, if necessary. The examination of teachers of vernacular and classical subjects will also be held on that day at the same school.

2. The examination will consist of—

(*a*) A practical examination on class management.

(*b*) A practical test of ability to teach by giving two lessons to a class. The subject and the scope of the lesson will be communicated to each candidate later on.

(*c*) An oral examination in which the candidate will have to answer some questions on the art of teaching, object lessons, class control, organization and discipline.

3. The following books on the Art of Teaching are recommended:—

(*a*) For teachers of vernacular and classical subjects—

(1) Uchcha Siksha Sahachar, by D. N. Neogi.
(2) Nimna Siksha Suhrid, by P. Mukherjee.
(3) Uchcha Siksha Suhrid, by P. Mukherjee.
(4) Bidyalaya Bidhayak Bibidha Bidhan, by A. N. Adhikari.
(5) Bhugol Siksha Pranali, by Kazi Imdadul Haque.
(6) Teachers' Manual by Khan Bahadur Maulvi Ahsanullah.

(*b*) For Matriculation teachers—

(1) D. Salmon's Art of Teaching.
(2) Wren's Indian Teachers' Guide.
(3) Wren's Direct Method of Teaching English.
(4) Yate and Rajagopalchari's Direct Method.
(5) Kazi Imdadul Haque's Bhugol Siksha Pranali.

(*c*) For Graduates and I.A. passed teachers—

(1) The books recommended under (*b*).
(2) Landor's Principles and Practice of Teaching and Class Management.
(3) Raymont's Principles of Teaching.
(4) Suggestions for the Consideration of Teachers (Board of Education, Whitehall).
(5) Talks to Teachers (James).

Intending candidates from High schools, Government, aided and unaided, are directed to send in their applications, through the Headmasters of the schools in which they are employed, to this office at least a fortnight before the date of examination, and teachers of Middle schools and Junior Madrasahs, through the Deputy Inspectors, at least three weeks before the date. Every candidate will be required to produce his University or other certificates at the time of examination. A statement containing information on the following points should accompany the applications:—

(1) Name (in full).
(2) Father's name (in full).
(3) Age on the 30th September 1931.
(4) Name of the candidate's native district, subdivision and village.
(5) The last examination which the candidate passed and the year of passing.
(6) Period of service as a teacher.
(7) Name of the appointment which the candidate now holds and the date from which he has been holding it.
(8) Two class subjects in which the candidate wishes to be examined.
(9) Signature of the candidate.

T. AHMED,
Inspr. of Schools, Rajshahi Division.

Orders by the Syndicate of the Calcutta University.

Senate House, the 6th August 1931.

NOTIFICATION No. R. 56.

The Government of Bengal in the Ministry of Education are pleased to sanction the following changes in Chapter XXXIII of the Regulations relating to the Syllabus in Arabic and Persian for the M.A. Examination.

The changes will be given effect to from the examination of 1933:—

That, in Chapter XXXIII of the Regulations of the University, the existing syllabuses in Arabic and Persian (pages 213 and 215, respectively, of the University Regulations, edition of 1930), be replaced by the following Syllabuses:—

I

PERSIAN.

1. The M.A. Course in Persian shall be divided into five groups.

2. The first four papers of all the groups shall be identical and shall cover the following subjects:—

Paper I.—(*i*) General History of Pre-Islamic and Post-Islamic Persia	70
(*ii*) General History of Islamic India	30
Paper II.—(*i*) History of Persian Literature	100
Paper III.—(*i*) Philology	30

The course in Persian Philology includes the following topics:—

Classification of Languages—the Indo-European Family of Languages—the Aryan or Indo-Iranian branch—the Classification of the Iranian Speeches—History of Iranian in its sounds and inflexions in the Old Iranian, Middle Iranian and New Iranian Periods (through the Persian language).

(*ii*) Rhetoric and Prosody	30
(*iii*) Unseen	40
Paper IV.—(*i*) Modern Persian— (*a*) Poetry .. (*b*) Prose	50
(*ii*) Essay on a subject connected with the compulsory papers	50

3. The remaining papers shall be taken from one of the following groups:—

GROUP A—Literature.

Paper V.—Text—Poetry (*i*) Ghazal	70
(*ii*) Rubai	30
Paper VI.—Text—Poetry (*i*) Qasida	50
(*ii*) Mathnawi	50
Paper VII.—Text—Prose (ornate)	100
Paper VIII.—Text—Prose (simple)	100

GROUP B—Historical Literature (Persian).

Paper V.—Text—Historical Poetry	100
Paper VI.—Text—Prose—Tahiride and Ghaznawide periods ..	100
Paper VII.—Text—Prose—Saljuq and Tatar periods	100
Paper VIII.—Text—Prose—Safawide and Qachar periods ..	100

GROUP C—Historical Literature (Indian).

Paper V.—Text—Historical poetry	100
Paper VI.—Text—Prose—Pre-Moghal period	100
Paper VII.—Text—Prose—Moghal period (Baber-Akber) ..	100
Paper VIII.—Text—Prose—Moghal period (Jehangir and Shah Jahan)	100

GROUP D—Mysticism.

Paper V.—Text—Mystical Poetry	100
Paper VI.—Text—Prose	100
Paper VII.—	
Phylosophy of Mysticism	100
Paper VIII.—	
History of Mysticism	100

GROUP E—Phylology.

Paper V.—	
(*a*) General Principles of Linguistics (*b*) History of the Persian Script	100
Paper VI.—	
Texts (including elements of Grammar) : (*a*) Avesta (*b*) Old Persian	100
Paper VII—	
(*a*) Pahlavi Text (including elements of Grammar) .. .. (*b*) Semitic Influence on Persian Language	100
Paper VIII.—(*a*) Historical Grammar of the Iranian Languages ..	50
(*b*) Sanskrit	50

Only such students will be permitted to take up this Group as have passed B.A. Examination with Honours in Persian or M.A. Examination in any other Group in Persian.

4. A candidate who has taken his B.A. Degree with Honours in Persian may, subject to the conditions specified below, offer a thesis connected with some department of the subject in lieu of examination in two Papers. If the candidate has taken up Group B or C, the thesis will be allowed to be substituted for Papers I and IV. If the candidate has taken up Groups A, D or E, the thesis will be allowed to be substituted for Papers III and IV. The thesis may be written in Persian or in English.

5. The conditions to be fulfilled by a candidate who is allowed to offer a thesis are as follows:—

(*a*) He must have completed one year's study of the M.A. Course in Persian under University Lecturers or in a College affiliated in Persian up to the M.A. standard.

(*b*) He must, at the end of the year, submit to the Board of Higher Studies in Arabic and Persian, an application for permission to offer a thesis in lieu of part of the Examination.

(*c*) The application shall indicate the subject and scope of the thesis he wishes to offer and must be recommended by the Professor or Professors under whom he has been working.

(*d*) If the application be granted by the Board of Higher Studies in Arabic and Persian, the thesis must be prepared under the general direction of the Professor or Professors with whom the candidate is prosecuting his studies.

(*e*) The candidate shall deliver three copies of the thesis (printed or typewritten) to the Secretary to the Council of Post-Graduate Teaching in Arts, at least one month before the first day of the M.A. Examination at which he intends to present himself.

(*f*) The thesis shall be examined by a Board of three Examiners and the maximum number of marks assigned to the thesis shall be 200. The Examiners may, at their discretion, subject the candidate to a *viva voce* examination on the subject of the thesis.

(*g*) The name of a candidate whose thesis has been approved shall be marked with an asterisk in the list of successful candidates published in the Gazette and also in the University Calendar.

6. The limits of the subjects shall be defined and books shall be prescribed and recommended from time to time by the Board of Higher studies concerned.

II

ARABIC.

1. The M.A. Course in Arabic shall be divided into six groups.

2. The first four papers of all the groups shall be identical and shall cover the following subjects:—

Paper I.—History of Islam in Arabia and Persia and in Mediterranian countries	100
Paper II.—(*i*) History of the Arabic Language	30
The course in the History of the Arabic Language includes the following topics:	
Classification of Languages—the General Characteristics of the Semitic Family of Speech—The Grouping of the Semitic Languages—Elements of the History of the Sounds and Inflexions of Arabic in the Pre-Islamic and Classical Periods.	
(*ii*) History of Arabic Literature	70
Paper III.—(*i*) Arabic Grammar..	30
(*ii*) Rhetoric and Prosody	30
(*iii*) Translation of Unseen passages from Arabic into English and *vice versa*	40
Paper IV.—(*i*) Modern Arabic—	
(*a*) Prose and (*b*) Poetry	50
(*ii*) Essay on a subject connected with the compulsory papers	50

3. The remaining papers shall be taken from one of the following groups:—

Group A—Literature.

Paper V.—Text—Pre-Islamic Poetry	100
Paper VI.—Text—Post-Islamic Poetry	100
Paper VII.—Text—Literary Criticism	100
Paper VIII.—Text—Prose	100
(*i*) Rhymed.	
(*ii*) Unrhymed.	

Group B—History.

Paper V.—Philosophy of History	100
Paper VI.—Early Caliphat, Umayyads and Abbasides	100
Paper VII.—Muslims in Spain	100
Paper VIII.—A special period in the History of Islam to be prescribed every year by the Board	100

GROUP C—The Quran and the Tafsir.

Paper V.—Text from the Quran	100
(*i*) Sura Maida	
(*ii*) Sura Yusuf	
(*iii*) Sura Najm	
Paper VI.—Text—Tafsir al-Baydawi-Sura Ali Imran	100
Paper VII.—Quranic Sciences	100
Paper VIII.—History of the Interpretation of the Quran ..	100

GROUP D—Hadith.

Paper V.—Text	100
Paper VI.—Text	100
Paper VII.—Usul-i-Hadith including the Maudu'at	100
Paper VIII.—The History of the Development of the Science of Hadith	100

GROUP E—Ilmu'l-Kalam and Philosophy.

Paper V.—al-Falsafatul-Ishraqiya	100
Paper VI.—al-Falsafatul-Mashshya	100
Paper VII.—Ilmu'l-Kalam	100
Paper VIII.—History of Muslim Philosophy and Ilmu'l-Kalam ..	100

GROUP F—Philology and Grammar.

Only such students will be allowed to take up this Group as have passed the B.A. Examination with Honours in Arabic or any other Examination equivalent to it or the M.A. Examination in any other Group in Arabic.

Paper V.—(*i*) Arabic Grammar	50
(*ii*) Linguistic theories of the Arab Grammarians ..	50
Paper VI.—(*i*) General Principles of Linguistic Development including Phonetics	100
(*ii*) Elements of Arabic Palaeography	
Paper VII.—(*a*) Hebrew	50
(*b*) Syriac	50
Paper VIII.—Comparative Philology of the Semitic age ..	100

4. A candidate who has passed the B.A. Examination with Honours in Arabic or the Madrasa Senior Certificate Examination or any other Examination equivalent to it may, subject to the condition specified below, offer a thesis on a subject connected with the Special Group chosen for study instead of Papers III and IV. The thesis may be written in Arabic or in English.

5. The conditions to be fulfilled by a candidate who is allowed to offer a thesis are as follows:—

(*a*) He must have completed one year's study of the M.A. course in Arabic under University Lecturers or in a College affiliated in Arabic up to the M.A. standard.

(*b*) He must, at the end of the year, submit to the Board of Higher Studies in Arabic and Persian, an application for permission to offer a thesis in lieu of part of the Examination.

(*c*) The application shall indicate the subject and scope of the thesis he wishes to offer and must be recommended by the Professor or Professors under whom he has been working.

(*d*) If the application be granted by the Board of Higher Studies in Arabic and Persian, the thesis must be prepared under the general direction of the Professor or Professors with whom the candidate is prosecuting his studies.

(*e*) The candidate shall deliver three copies of the thesis (printed or typewritten) to the Secretary to the Council of Post-Graduate Teaching in Arts, at least one month before the first day of the M.A. Examination at which he intends to present himself.

(*f*) The thesis shall be examined by a Board of three Examiners and the maximum number of marks assigned to the thesis shall be 200. The Examiners may, on their discretion, subject the candidate to a *viva voce* examination on the subject of the thesis.

(*g*) The name of the candidate whose thesis has been approved shall be marked with an asterisk in the list of successful candidates published in the Gazette and also in the University Calendar.

6. The limits of subjects shall be defined and books shall be prescribed and recommended from time to time by the Board of Higher Studies concerned.

NOTIFICATION No. R. 57.

The Government of Bengal in the Ministry of Education are pleased to sanction the following changes in section 8, Chapter XXXIII of the Regulations of the University relating to the syllabus in English for the M.A. Examination. The changes will be given effect to from the Examination of 1933:—

(1) That sub-section 2, section 8, Chapter XXXIII of the Regulations be replaced by the following:—

2. The first four papers of each group shall be identical and shall cover the following subjects:—

Paper I—(*a*) General History of English Literature	..	70
(*b*) History of the English Language (for Group A)	..	30
or		
Principles of Criticism (for Group B)	.. ..	30

The subjects shall be studied according to syllabuses prescribed.

Paper II—Drama Texts	.. ..	80
Unseens ..	.. ..	20
Paper III—Poetry Texts (including Chaucer)	.. .. ..	80
Unseens ..	.. ..	20
Paper IV—Prose Texts..	.. ..	80
Unseens ..	.. ..	20

(2) That sub-section 4, section 8, Chapter XXXIII of the Regulations be replaced by the following:—

"4. The remaining papers shall be taken from one of the following groups, but not from both:—

GROUP A.

Papers V, VI, VII to be chosen out of the following five, of which at least two shall be from the first three:—

(*a*) A selected period of Drama	.. .. ..	100
(*b*) A selected period of Poetry	.. .. ..	100
(*c*) A selected period of Prose	.. .. ..	100
(*d*) Foreign classics in translation to be studied in relation to English Literature	.. ..	100
(*e*) History and Principles of Criticism (including a general study of literary types)	.. ..	100
Paper VIII—An Essay or Essays on subjects connected with the course	.. ..	100

The special periods and courses in Papers V, VI and VII shall be specified from time to time; no period shall be selected before Chaucer and not more than one shall be pre-Elizabethan.

GROUP B.

Papers V, VI, VII to be chosen out of the following five, of which at least two shall be from the first three:—

(*a*) Old English Texts (including Grammar)	80
Unseens	20
(*b*) Middle English Texts (including Grammar)	80
Unseens	20
(*c*) History of the English Language (including elements of Teutonic Philology)	100
(*d*) Early Germanic and Early French Classics in translation to be studied in relation to Old and Middle English Literature ..	100
(*e*) Gothic or Old Norse or Old High German with prescribed texts of a simple nature	100
Paper VIII.—An Essay or Essays on subjects connected with the course	100

3. That sub-section 5, section 8, Chapter XXXIII of the Regulations be replaced by the following:—

"5. Unseen passages in Papers II, III and IV shall be of the same standard as the Texts prescribed and intelligent critical appreciation of the passages set shall be insisted upon."

4. That paragraph 2 of sub-section 6, section 8, Chapter XXXIII, be replaced by the following:—

"A candidate, who has taken his B.A. Degree with Honours in English, may, subject to the conditions specified below, offer a thesis connected with some department of the subject in lieu of examination in two Papers. If the candidate has taken up Group A, the thesis will be allowed to be substituted for either Paper V, VI or VII and Paper VIII. If the candidate has taken up Group B, the thesis will be allowed to be substituted for either Paper II, III or IV and Paper VIII."

5. That the following new sub-section to be entitled sub-section 7 be added to section 8, Chapter XXXIII of the Regulations:—

"7. In one of the first three papers (*a*), (*b*) and (*c*), in Group A, and of the first two, (*a*) and (*b*), in Group B (as detailed in sub-section 4 above), the method of teaching and the questions set shall be such that candidates may concern themselves either with literature, or with life and thought."

S. MUKHERJI,
Assistant Registrar (offg.).

NOTIFICATION No. MISC. 58.

The Government of Bengal in the Ministry of Education are pleased to sanction the following changes in Chapter XI of the Regulations:—

1. That, in section 18, Chapter XI of the Regulations, "(*vi*) Applied Physics" be added after "(*v*) Physiology."

2. That the following be added at the end of section 19, Chapter XI of the Regulations:—

"Provided that the Board of Higher Studies in Applied Physics shall be constituted as follows:—

(*a*) Chairman of the Board of Higher Studies in Pure Physics (*ex-officio*).

(*b*) University Teachers in Applied Physics.

(*c*) Three persons selected by the Council from amongst its members.

(*d*) Three technical experts to be co-opted by the Board.

NOTE.—If the Board so constituted does not contain at least three members of the Board of Higher Studies in Pure Physics, it should co-opt one additional member from it."

A. N. MUKHERJEE, *Registrar.*

NOTIFICATIONS

Calcutta, the 6th August 1931

The undermentioned candidates have been awarded Senior Secondary Scholarships of Rs 20 a month on the results of the Cambridge University School Certificate Examination held in December 1930 The scholarships are tenable for two years with effect from 1st January 1931, or subsequent date where the terms begin later (Article 3, Chapter VII of the Code of Regulations for European Schools in Bengal) .—

Serial No	Index No	Name.	Age on 31st December 1930.	School from which appeared	Institution at which the scholarship is tenable
			Y. M. D.		
1	148	Frederick, F. H ..	17 1 29	St. Xavier's College, Calcutta ..	Electrical Engineering College, Faraday House, 62-70, Southampton Row, London, W. C. I.
2	201	Honeywell, W. H. ..	17 1 6	Gosthal's Memorial School, Kurseong.	St. Xavier's College, Calcutta.
3	2838	Chadwick, C. F ..	17 5 26	Loreto Convent, Darjeeling ..	Loreto House, Calcutta
4	2796	Clegg, J. F. W. ..	16 10 22	La Martiniere for Girls, Calcutta	La Martiniere for Girls, Calcutta.
5	2795	Christian, M. ..	16 6 15	Ditto	Ditto.
6	193	Bibra, L. ..	16 5 26	Victoria School, Kurseong ..	The School of Accountancy, 111, Moorgate Street, London.

N. B —Satisfactory evidence has been produced that the candidates were under 19 years of age on the 31st December 1930. The domicile of their parents or guardians has been ascertained to be in the province of Bengal.

The undermentioned candidates have been awarded Junior Secondary Scholarships of Rs 12 a month on the results of the Cambridge University Junior Local Examination held in December 1930 The scholarships are tenable for two years with effect from 1st January 1931, or subsequent date where the terms begin later (Article 3, Chapter VII of the Code of Regulations for European Schools in Bengal) :—

Serial No	Index No.	Name.	Age on 31st December 1930.	School from which appeared	School at which the scholarship is tenable
			Y. M. D.		
1	249	Olivière, A. R. ..	15 8 22	St Patrick's School, Asansol .	St Patrick's School, Asansol.
2	246	D'Aranjo, K J. J.	16 0 4	Ditto ..	Ditto.
3	3847	Cullen, K. ..	15 3 7	Loreto House, Calcutta ..	Loreto House, Calcutta.
4	253	Young, G. A ..	14 9 8	St. Patrick's School, Asansol ..	St. Patrick's School, Asansol.

N. B —Satisfactory evidence has been produced that the candidates were under 17 years of age on the 31st December 1930. The domicile of their parents or guardians has been ascertained to be in the province of Bengal

W. F. PAPWORTH,

Inspector of European Schools, Bengal.

	Fisher, Donald Eric	..	Non-collegiate student (St. Xavier's College).
	Gan, Rabindranath	..	Ripon College.
	Gangopadhyay, Dineschandra	..	Non-collegiate student (Ripon College).
	,, Hemendrakumar	..	Scottish Church College.
	,, Mohanlal	..	Non-collegiate student (Vidyasagar College).
	Ghosh, Ajitkumar	..	Vidyasagar College.
	,, Kamalakanta	..	Ditto.
80	,, Manimohan	..	Ditto.
	,, Santoshkumar	..	Ditto.
	,, Sarojkumar	..	Ditto.
	,, Sunilkrishna	..	Scottish Church College.
	Gogai, Ghanasyam	..	Non-collegiate student (Roll Cal. N. 4).
	Guhathakurta, Rabindranath	..	Scottish Church College.
	Gupta, Nrimalkumar	..	Ditto.
	Jatasankar Ramji Vora	..	St. Xavier's College.
	Jerbanoo Jehangir Kabraji	..	Non-collegiate student (Roll Cal. F. N. 11).
	Kamta Prasad	..	Non-collegiate student (Roll Cal. N. 300).
90	Kayal, Jyotischandra	..	Ripon College.
	K. Subba Row	..	City College.
	Laha, Panchugopal	..	Hughli College.
	Lala Binoy Krishna	..	Non-collegiate student (Presidency College).
	Muhammad Abdul Haque Miah	..	Bagerhat College.
	Mahanti, Nilkantha	..	Bankura Wesleyan College.
	Maiti, Asutosh	..	Ditto.
	,, Harisadhan	..	Non-collegiate student (Scottish Church College).
	Majumdar, Anima	..	Non-collegiate student (Roll Cal. F. N. 34).
	,, Byomkes	..	Non-collegiate student (Vidyasagar College).
100	,, Debikumar	..	Ditto.
	,, Satyendranath	..	Vidyasagar College.
	,, Sunilkumar	..	Ditto.
	Mandal, Sudhirkumar	..	Ditto.
	,, Sarasibhushan	..	Non-collegiate student (Presidency College).
	Maneck S. Pavri	..	Non-collegiate student (Roll Cal. F. N. 10).
	Maung Myint	..	Non-collegiate student (Roll Cal. N. 306).
	Metia, Kshudiram	..	Bankura Wesleyan College.
	Mg. Than Myaing	..	Non-collegiate student (Roll Cal. N. 299).
	Misra, Abaniswar	..	Ripon College.
110	Mitra, Santoshkumar	..	Non-collegiate student (Chittagong College).
	,, Sachindranath	..	Vidyasagar College.
	Mowla Nawaz	..	City College.
	Muhammod Nawab Ali	..	Sylhet M. C. College.
	Muhammod Mubarak Ali	..	Ditto.
	Mukhopadhyay, Debiprasanna	..	Ripon College.
	,, Harendranath	..	Vidyasagar College.
	,, Kalinath	..	Barisal Brajamohan College.
	,, Kamalkrishna	..	Hetampur Krishna Chandra College.
	,, Kanailal	..	Hughli College.
120	,, Madhusudan	..	City College.
	,, Mohitkumar	..	Berhampur Krishnath College.
	,, Nanigopal	..	Vidyasagar College.
	,, Nirmalkumar	..	Non-collegiate student (Ripon College).
	,, Pratima	..	Non-collegiate student (Roll Cal. F. N. 3).
	,, Sachindranath	..	Presidency College.
	,, Sailendranath	..	Bhowanipur Asutosh College.
	,, Sailendranath	..	Daulatpur Hindu Academy.
	,, Surendranath	..	Non-collegiate student (Scottish Church College).
	Mundle, Satyendra Kumar	..	Serampur College.
130	Nandi, Amarnath	..	Berhampur Krishnath College.
	Niyogi, Prabodhchandra	..	Scottish Church College.
	Nurul Haque	..	Sylhet M. C. College.
	Padhi, Padmanabha	..	City College.
	Pandit, Atulkrishna	..	Non-collegiate student (Burdwan Raj College).
	Phukan, Kusumkumar	..	Non-collegiate student (Gauhati Cotton College).
	Pinakinprasad Keshavlal Trivedi	..	Non-collegiate student (Roll Cal. N. 317).
	Pramanik, Baradakanta	..	Vidyasagar College.
	P. Suraj Krishen	..	Ripon College.
	Quazi Syed Mohammad Izhar Hussain		Non-collegiate student (Ripon College).
140	Ram Jas Singh	..	Vidyasagar College.
	Ram Niwas Bhotika	..	Ditto.
	Rauth, Nagendrachandra	..	Non-collegiate student (Roll Cal. N. 9).
	Ray, Binaykumar	..	Berhampur Krishnath College.
	,, Birendrabhushan	..	Sylhet M. C. College.
	,, Kamakhyaprasad	..	Non-collegiate student (Rajshahi College).
	,, Sailaschandra	..	Chittagong College.
	,, Sibendusekhar	..	Ripon College.
	Raychaudhuri, Dwijendralal	..	City College.
	,, Kantindubhushan		Vidyasagar College.
150	,, Tapagopal	..	Bhowanipur Asutosh College.
	Sarkar, Gangadhar	..	Ripon College.
	,, Kantilal	..	Bankura Wesleyan College.
	Sarma, Bireswar	..	Gauhati Cotton College.
	Sehor Uddin Ahmed	..	Non-collegiate student (Rajshahi College).
	Sen, Anantakumar	..	Barisal Brajamohan College.
	,, Anuttam	..	Scottish Church College.

	Sen, Kshitishchandra	..	Chittagong College.
	„ Saileschandra	..	Comilla Victoria College.
	„ Satyendrachandra	..	Non-collegiate student (Ripon College).
160	„ Subodhchandra	..	Comilla Victoria College.
	„ Subodhranjan	..	Gauhati Cotton College.
	„ Surendranath	..	City College.
	Sengupta, Phanindrakumar	..	Vidyasagar College.
	„ Sachindranath	..	Ditto.
	„ Santoshkumar	..	Non-collegiate student (Scottish Church College).
	Senmajumdar, Bimalkumar	..	Barisal Brajamohan College.
	Seraj Uddin Ahmed	..	Comilla Victoria College.
	Sil, Surendranath	..	Ripon College.
	Sinha, Kshitiswar		Non-collegiate student (Roll Syl. N. 2).
170	„ Makhanlal	..	Barisal Brajamohan College.
	„ Satyagopal	..	Hetampur Krishna Chandra College.
	„ Ujjwalnarayan	..	St. Paul's College.
	Sitala Prasad Singh	..	Vidyasagar College.
	Som, Nanigopal	..	Ditto.
	Subba Rao Ayyagari	..	Non-collegiate student (Vidyasagar College).
	Syed Mahammad Askari	..	St. Xavier's College.
	Syed Tobarek Ali	..	Daulatpur Hindu Academy.
178	William Whittaker	..	St. Xavier's College.

Pass Course.

(In alphabetical order.)

	Abdar Rahman	..	Non-collegiate student (Roll Cal. N. 7).
	Abdul Ahad	..	City College.
	Abdul Aziz	..	Non-collegiate student (Sylhet M. C. College).
	Abdul Bayi	..	Chittagong College.
	Abdul Gofur Mazumder	..	Comilla Victoria College.
	Abdul Hafez	..	Feni College.
	Abdul Halim	..	Non-collegiate student (Ripon College).
	Abdul Hamid	..	Barisal Brajamohan College.
	Abdul Hasham Khan	..	Mymensingh A. M. College.
10	Abdul Jalil Munshi	..	Bagerhat College.
	Abdul Kader Ahmed	..	Rajshahi College.
	Abdul Khaleque Talukdar	..	Non-collegiate student (Rajshahi College).
	Abdul Latiff	..	Comilla Victoria College.
	Abdul Malek	..	Chittagong College.
	Abdul Mannan	..	Sylhet M. C. College.
	Abdul Wassoy Choudhury	..	Ditto.
	Abdur Rabb	..	Barisal Brajamohan College.
	Abdur Rahman	..	Feni College.
	Abdur Rahman Sarkar	..	Rajshahi College.
20	Abdus Salam Sikdar	..	Comilla Victoria College.
	Abdus Samad	..	Non-collegiate student (Roll Bur. N. 3).
	Abdus Sattar Mollick	..	St. Paul's College.
	A. B. M. Hashem	..	Presidency College.
	A. B. M. Jalaluddin	..	Non-collegiate student (Daulatpur Hindu Academy).
	Abul Bashar Md. Kiamat Ali	..	Rangpur Carmichael College.
	Abul Hossain Talukdar	..	Islamia College.
	Abul Hussain Fazlul Bari	..	Sylhet M. C. College.
	Abul Khayer Muhammad Siddique	..	Non-collegiate student (Roll Cal. N. 304).
	Abul Mansur Mohammad Ibrahim	..	Chittagong College.
30	Abu Nasar Md. Nazir Uddin Chaudhury.		Rajshahi College.
	Abu Sayeed Md. Khaliqur Rahman	..	Non-collegiate student (Bangabasi College).
	Achariar, Narayan	..	Bankura Wesleyan College.
	Acharyya, Adinath	..	Mymensingh A. M. College.
	„ Dwijendranath	..	Non-collegiate student (Rajshahi College).
	„ Rajendralal	..	Non-collegiate student (Roll Cal. N. 20).
	„ Ramapada	..	Non-collegiate student (Berhampore Krishnath College).
	„ Ronupada	..	Vidyasagar College.
	Adhikari, Bimalkrishna		Scottish Church College.
	„ Raghunath	..	Hughli College.
40	A. F. Mamin Uddin Faraji	..	Barisal Brajamohan College.
	A. F. M. Lutfar Rahman	..	Islamia College.
	Ahid Ghazi	..	Sylhet M. C. College.
	Ahmad	..	Feni College.
	Ahmaduddin Ahamed	..	Islamia College.
	Ahmed Hossain	..	Berhampur Krishnath College.
	Ahsee Majid	..	Non-collegiate student (Roll Cal. F. N. 22).
	Ajijulla Sarkar	..	Berhampur Krishnath College.
	A. K. Abdul Wajed	..	Presidency College.
	Akiqur Rozah Choudhuri	..	Sylhet M. C. College.
50	A. K. Md. Abdul Aziz	..	Presidency College.
	A. K. Md. Habibur Rahman	..	Feni College.
	A. K. M. Habibur Rahman	..	Barisal Brajamohan College.
	A. M. Hassain Ally	..	Ditto.
	Amir Ali Mondal	..	City College.
	Amir Hosain Choudhury	..	Non-collegiate student (Islamia College).
	Amir Hossain	..	Comilla Victoria College.
	A. M. Mohiuddin Ahmed Mazumdar		Non-collegiate student (Islamia College).
	Anwaruz Zaman Khan	..	Bagerhat College.
	Arthur Joseph Mercos	..	Non-collegiate student (Roll Cal. N. 283).
60	Arzumond Ali	..	Sylhet M. C. College.

	Asadul Huq	..	Barisal Brajamohan College.
	Asahoque Miah	..	Feni College
	Atma Ram Khemka	..	Presidency College
	A T. Md Ikhlasur Rahman	..	Chittagong College
	Attar Uddin Ahmed	..	Sylhet M. C. College.
	Azheruddin Ahmad	..	Non-collegiate student (Rangpur Carmichael College)
	Azimuddin Ahmed	..	Non-collegiate student (Islamia College)
	Azizul Islam	..	Feni College
	Badruddin Haidar	..	Rangpur Carmichael College.
70	Bagchi, Aswinikumar	..	Berhampur Krishnath College
	,, Basantakumar	..	Bangabasi College
	,, Purnachandra	..	Krishnagar College
	,, Syamaprasanna	..	Bhowanipur Asutosh College.
	Baksi, Biswanath		Non-collegiate student (Krishnagar College).
	,, Jnanendranath		Vidyasagar College.
	,, Phanibhushan	..	Ditto
	Bal, Dhirendranath	..	Rangpur Carmichael College
	Bandyopadhyay, Abanichandra	..	St Xavier's College
	,, Abanindranath	.	Scottish Church College
80	,, Amiyanath		Non-collegiate student (Rajshahi College).
	,, Amritalal	..	Berhampur Krishnath College.
	,, Anilkrishna		Scottish Church College
	,, Anilkumar	..	Non-collegiate student (St Paul's College).
	,, Bankimbihari		Bhowanipur Asutosh College
	,, Bankimchandra	..	Non-collegiate student (Comilla Victoria College)
	,, Bholanath, I	..	Non collegiate student (Vidyasagar College
	,, Bholanath	..	Ripon College
	,, Bhupendranath		Scottish Church College
	,, Bijaykumar	..	Ditto.
90	,, Binaykrishna	..	Non-collegiate student (City College).
	,, Birajmohan		Vidyasagar College
	,, Birendrakrishna		Non-collegiate student (Rajshahi College)
	,, Dabendranath	..	Non-collegiate student (Vidyasaga College)
	,, Dhirendranarayan		Bangabasi College
	,, Dwarikanath	..	Non-collegiate student (Roll Cal N. 319).
	,, Hemantakumar	..	Barisal Brajamohan College.
	,, Jagabandhu	..	Berhampur Krishnath College.
	,, Jagatmohan	..	Vidyasagar College
	,, Jitendralal	..	Non-collegiate student (Bangabasi College).
100	,, Jyotilal	..	Vidyasagar College
	,, Kaliprasad	..	Burdwan Raj College.
	,, Kanailal	..	Non-collegiate student (Bangabasi College)
	,, Karunasindhu	..	Berhampur Krishnath College.
	,, Kshitischandra	..	Bankura Wesleyan College
	,, Manindranath	..	Non-collegiate student (Ripon College).
	,, Monoranjan	..	Vidyasagar College.
	,, Nagendranath	.	Berhampur Krishnath College
	,, Narayanchandra	..	Bangabasi College
	,, Nikhilchandra	..	Bankura Wesleyan College
110	,, Niranjan	..	Krishnagar College
	,, Nirendranath	..	Presidency College.
	,, Nitaichandra	..	Vidyasagar College.
	,, Nrisinharam	.	Presidency College
	,, Pannalal	..	Non-collegiate student (Burdwan Raj College).
	,, Paresnath	..	St. Xavier's College
	,, Paresnath	..	Non-collegiate student (Vidyasagar College).
	,, Prabodhchandra	..	Bhowanipur Asutosh College.
	,, Prahladchandra		Vidyasagar College.
	,, Prankrishna	..	Bangabasi College
120	,, Praphullaranjan	..	Vidyasagar College.
	,, Rajiblochan	..	Berhampur Krishnath College
	,, Ramdas	..	Bhowanipur Asutosh College
	,, Sailendrakumar	..	Non-collegiate student (Ripon College).
	,, Sailendranath	..	Scottish Church College.
	,, Saktipada	..	Bankura Wesleyan College.
	,, Santikumar	..	Berhampur Krishnath College
	,, Santosh	..	Feni College
	,, Santoshkumar	..	St. Paul's College.
	,, Satiranjan	..	Bankura Wesleyan College.
130	,, Satischandra	..	Barisal Brajamohan College.
	,, Satyakinkar		Bankura Wesleyan College.
	,, Satyendranath	..	Bangabasi College.
	,, Sibdas	..	Non-collegiate student (Barisal Brajamohan College)
	,, Sobhamay	..	Presidency College.
	,, Subodhchandra		City College
	,, Subodhkumar	..	Vidyasagar College.
	,, Sudhirkumar		Scottish Church College.
	,, Suhaslal	..	Non collegiate student (Scottish Church College).
	,, Sunilkumar	..	St. Xavier's College.
140	,, Susilkumar	..	Hughli College
	,, Taranath	..	Vidyasagar College.
	,, Tinkari	..	Scottish Church College.
	,, Umapada	.	Sanskrit College.
	Banik, Kunjabihari	..	Feni College.
	Bar, Nakuleswar	..	Barisal Brajamohan College.

	Bardhan, Jatindrachandra	..	Non-collegiate student (Comilla Victoria College).
	Bardolai, Debeswar	..	Gauhati Cotton College.
	,, Kamaleswar	..	Ditto.
	Barman, Sudhirchandra	..	Mymensingh A. M. College.
150	,, Syamapada	..	Bangabasi College.
	Barmanray, Asutosh	..	Comilla Victoria College.
	Barua, Prakashkusum	..	Vidyasagar College.
	,, Premadhar	..	Gauhati Cotton College.
	Baruachaudhuri, Kshitischandra	..	Comilla Victoria College.
	Basak, Matilal	..	Cooch-Behar Victoria College.
	,, Satyendranath	..	Scottish Church College.
	Basir Uddin Ahamad	..	Non-collegiate student (City College).
	Basu, Ajitkumar	..	St. Paul's College.
	,, Amarendrakumar	..	Bangabasi College.
160	,, Amarkrishna	..	Non-collegiate student (Daulatpur Hindu Academy).
	,, Amiyakumar	..	Bhowanipur Asutosh College.
	,, Amulyabhushan	..	Daulatpur Hindu Academy.
	,, Amulyaratan	..	Non-collegiate student (Rajshahi College).
	,, Anilchandra	..	Vidyasagar College.
	,, Anilkrishna	..	Scottish Church College.
	,, Aniskumar	..	Bangabasi College.
	,, Asokchandra	..	Non-collegiate student (Vidyasagar College).
	,, Bhupalchandra	..	Vidyasagar College.
	,, Bibhutibhushan	..	Bankura Wesleyan College.
170	,, Bichitranarayan	..	Presidency College.
	,, Brindaban	..	Ripon College.
	,, Chittaranjan	..	Bhowanipur Asutosh College.
	,, Debendranath	..	City College.
	,, Debranjan	..	St. Xavier's College.
	,, Hirendranath	..	Vidyasagar College.
	,, Indubhushan	..	City College.
	,, Jitendramohan	..	Cooch-Behar Victoria College.
	,, Jnanendralal	..	Ditto.
	,, Kalidas	..	Daulatpur Hindu Academy.
180	,, Kamalapati	..	Ripon College.
	,, Kshitischandra	..	Vidyasagar College.
	,, Latika	..	Bethune College.
	,, Mrityunjayprasad	..	Ripon College.
	,, Nira	..	Non-collegiate student (Roll Cal. F. N. 24).
	,, Nirmalchandra	..	Ripon College.
	,, Pabitrakumar	..	Presidency College.
	,, Ranjitkumar	..	Non-collegiate student (City College).
	,, Samarendranath	..	Bhowanipur Asutosh College.
	,, Santoshkumar	..	Vidyasagar College.
190	,, Sarojranjan	..	Non-collegiate student (Vidyasagar College).
	,, Sitikantha	..	Ripon College.
	,, Sobhendramadhab	..	Non-collegiate student (Ripon College).
	,, Subodhchandra	..	Scottish Church College.
	,, Sudhirchandra	..	Barisal Brajamohan College.
	,, Susilkumar	..	Ditto.
	,, Susilkumar	..	Ripon College.
	,, Tridibes	..	Scottish Church College.
	,, Umarani	..	Non-collegiate student (Bethune College).
	Basumallik, Gopendrakrishna	..	Scottish Church College.
200	Batabyal, Radhamohan	..	Berhampur Krishnath College.
	Bhaduri, Bhabanikisor	..	Non-collegiate student (Vidyasagar College).
	Bhandari, Jugalkisor	..	Vidyasagar College.
	Bhanja, Dwipendranath	..	Scottish Church College.
	,, Hirendranath	..	Non-collegiate student (Vidyasagar College).
	Bhattacharyya, Abanimohan	..	Scottish Church College.
	,, Adrischandra	..	Daulatpur Hindu Academy.
	,, Amarnath	..	Ripon College.
	,, Baidyanath	..	Hughli College.
	,, Bhabatosh	..	Bhowanipur Asutosh College.
210	,, Bholanath	..	Serampur College.
	,, Bimaleschandra	..	City College.
	,, Binaybhushan	..	Vidyasagar College.
	,, Birajmohan	..	Bhowanipur Asutosh College.
	,, Bishnupada	..	Scottish Church College.
	,, Dhirendrakumar	..	Rangpur Carmichael College.
	,, Dhirendrakumar	..	Non-collegiate student (Rajshahi College).
	,, Dineschandra	..	Chittagong College.
	,, Haralal	..	Barisal Brajamohan College.
	,, Indubhushan	..	Non-collegiate student (Vidyasagar College).
220	,, Jagatbandhu	..	Berhampur Krishnath College.
	,, Jasodaranjan	..	Sylhet M. C. College.
	,, Jyotischandra	..	Rajshahi College.
	,, Kshitischandra	..	Mymensingh A. M. College.
	,, Kshitischandra	..	Non-collegiate student (Sanskrit College).
	,, Kumudbandhu	..	Mymensingh A. M. College.
	,, Kumudchandra	..	Ditto.
	,, Kunjabihari	..	Barisal Brajamohan College.
	,, Manoranjan	..	Ditto.
	,, Manoranjan	..	Comilla Victoria College.
230	,, Manoranjan	..	Non-collegiate student (Ripon College).
	,, Murarimohan	..	Hughli College.
	,, Nanindralal	..	Vidyasagar College.
	,, Nityaranjan	..	Bhowanipur Asutosh College.
	,, Paresnath	..	Comilla Victoria College.

	Bhattacharyya,	Parimalkanti ..	City College.
	,,	Phanibhushan ..	St. Paul's College.
	,,	Praphullachandra ..	City College.
	,,	Pratapchandra ..	Comilla Victoria College.
	,,	Rabindranath ..	Scottish Church College.
240	,,	Ramanimohan ..	City College.
	,,	Ramaprasanna ..	Berhampur Krishnath College.
	,,	Ramchandra ..	Sylhet M. C. College.
	,,	Rudraksha ..	Chittagong College.
	,,	Satyasadhan ..	Vidyasagar College.
	,,	Satyendrachandra ..	Cooch-Behar Victoria College.
	,,	Shorasimohan ..	Non-collegiate student (Roll Bur. N. 2).
	,,	Sibaprasad ..	Chittagong College.
	,,	Sudhansukumar ..	Mymensingh A. M. College.
	,,	Sudhirkumar ..	Non-collegiate student (Roll Bur. N. 5).
250	,,	Sudhirkumar ..	Sanskrit College.
	,,	Sudhirkumar ..	Scottish Church College.
	,,	Sureschandra ..	Hughli College.
	,,	Suryyakanta ..	City College.
	,,	Swarnakamal ..	Non-collegiate student (Vidyasagar College).
	,,	Tarapada ..	Ditto.
	Bhaumik,	Amitabha ..	Bangabasi College.
	,,	Chittaranjan ..	Comilla Victoria College.
	,,	Jitendrakumar ..	Rangpur Carmichael College.
	,,	Jogeschandra ..	Comilla Victoria College.
260	,,	Nagendrakumar ..	Vidyasagar College.
	,,	Nagendranath ..	Comilla Victoria College.
	,,	Prasannakumar ..	Feni College.
	Bijai Bahadur Singh	..	Vidyasagar College.
	Bishnu Prasad Thakur	..	Ditto.
	Biswas,	Abanitaran ..	Cooch-Behar Victoria College.
	,,	Anukulchandra ..	Barisal Brajamohan College.
	,,	Debabrata ..	Vidyasagar College.
	,,	Dwijendranath ..	Scottish Church College.
	,,	Haripada ..	Berhampur Krishnath College.
270	,,	Jamunkanta ..	Bangabasi College.
	,,	Kshetramohan ..	City College.
	,,	Mahadeb ..	Vidyasagar College.
	,,	Nababallabh ..	Non-collegiate student (Rajshahi College).
	,,	Nanigopal ..	Ditto.
	,,	Narayanchandra ..	Bankura Wesleyan College.
	,,	Narendranath ..	Bagerhat College.
	,,	Prabhatkumar ..	Ripon College.
	,,	Santosh Kumar ..	Serampur College.
	,,	Srischandra ..	Barisal Brajamohan College.
280	,,	Subodhkumar ..	City College.
	Bora, Krishnadas	..	Gauhati Cotton College.
	Bose, Juthica	..	Non-collegiate student (Roll Cal. F. N. 13).
	Brahmachari, Nripendrakumar	..	Ripon College.
	Buragohain, Jogendranath	..	Gauhati Cotton College.
	Carr, Stanley E.	..	Non-collegiate student (Roll Cal. N. 310).
	Chakrabarti,	Anantakesab ..	Non-collegiate student (Bagerhat College).
	,,	Anantakumar ..	Daulatpur Hindu Academy.
	,,	Anilchandra, I ..	Barisal Brajamohan College.
	,,	Anilchandra, II ..	Ditto.
290	,,	Bankimchandra ..	Ripon College.
	,,	Basudeb ..	Serampur College.
	,,	Bhabataran ..	City College.
	,,	Bholanath ..	Chittagong College.
	,,	Bijaykrishna ..	Mymensingh A. M. College.
	,,	Bijaykumar ..	Sanskrit College.
	,,	Binaykrishna ..	Ripon College.
	,,	Binaykumar ..	Vidyasagar College.
	,,	Biswesawar ..	Non-collegiate student (Bangabasi College).
	,,	Dwijendralal ..	Ripon College.
300	,,	Dwijendranath ..	Rangpur Carmichael College.
	,,	Gokullal ..	Ditto.
	,,	Harendrachandra ..	Chittagong College.
	,,	Haridas ..	Barisal Brajamohan College.
	,,	Haridas ..	Vidyasagar College.
	,,	Hemchandra ..	Non-collegiate student (Bagerhat College).
	,,	Hemchandra ..	Feni College.
	,,	Hiralal ..	City College.
	,,	Indubhushan ..	Vidyasagar College.
	,,	Jagadischandra ..	Non-collegiate student (Rajshahi College).
310	,,	Jagadischandra ..	Barisal Brajamohan College.
	,,	Jajneswar ..	Chittagong College.
	,,	Jibananda ..	Bagerhat College.
	,,	Jogeschandra ..	Comilla Victoria College.
	,,	Jyotirmay ..	Non-collegiate student (Rajshahi College).
	,,	Kalikumar ..	Comilla Victoria College.
	,,	Nanigopal ..	Faridpur Rajendra College.
	,,	Nanigopal ..	Krishnagar College.
	,,	Nanigopal ..	Vidyasagar College.
	,,	Nirmal ..	Scottish Church College.
320	,,	Nripendracharan ..	Mymensingh A. M. College.
	,,	Nripendranath ..	Gauhati Cotton College.
	,,	Phanibhushan ..	Ripon College.
	,,	Phanibhushan ..	Bhowanipur Asutosh College.
	,,	Prabhapada ..	Ditto.
	,,	Pramodkisor ..	Cooch-Behar Victoria College.

	Chakrabarti,	Praphullachandra	..	Bhowanipur Asutosh College.
	,,	Praphullakumar	..	Non-collegiate student (Vidyasagar College).
	,,	Praphullakumar	..	Ripon College.
	,,	Ramtaran	..	Mymensingh A. M. College.
330	,,	Sachischandra	..	Scottish Church College.
	,,	Satyabrata	..	Berhampur Krishnath College
	,,	Satyaranjan	..	Sanskrit College.
	,,	Saurendrakumar	..	Non-collegiate student (Vidyasagar College).
	,,	Sisukumar	..	Bangabasi College.
	,,	Sitalacharan	..	Non-collegiate student (Rajshahi College).
	,,	Subodhchandra	..	Rangpur Carmichael College.
	,,	Sudhirchandra	..	City College.
	,,	Sukumar	..	Faridpur Rajendra College.
	,,	Sureschandra	..	Vidyasagar College.
340	,,	Suryyakumar	..	Bhowanipur Asutosh College.
	,,	Tushtucharan	..	Bangabasi College.
	Chaliha,	Bishnuprasad	..	St. Paul's College.
	Chandra,	Amiyachandra	..	Scottish Church College.
	,,	Brindabanchandra	..	Vidyasagar College.
	Chattopadhyay,	Abhaykali	..	Ditto.
	,,	Achyutacharan	..	Scottish Church College.
	,,	Akshaykumar	..	Bangabasi College.
	,,	Amarendranath	..	Vidyasagar College.
	,,	Anathbandhu	..	Berhampur Krishnath College.
350	,,	Apurbakanti	..	Vidyasagar College.
	,,	Aswinikumar	..	Rangpur Carmichael College.
	,,	Bagalacharan	..	Bankura Wesleyan College.
	,,	Bangajiban	..	Vidyasagar College.
	,,	Bhabanicharan	..	Ditto.
	,,	Bibhutibhushan	..	Non-collegiate student (Roll Cal N. 279).
	,,	Chintaharan	..	Non-collegiate student (Barisal Brajamohan College).
	,,	Chittaranjan	..	Non-collegiate student (Burdwan Raj College.
	,,	Debprasanna	..	Ripon College.
	,,	Dhananjay	..	Berhampur Krishnath College.
360	,,	Dhirendrakumar	..	Non-collegiate student (Comilla Victoria College).
	,,	Dwijapada	..	Hughli College.
	,,	Gobindamadhab	..	Ripon College.
	,,	Gopimohan	..	Scottish Church College.
	,,	Himansunath	..	Ditto.
	,,	Jyotirmay	..	Bhowanipur Asutosh College
	,,	Karaliprasad	..	Scottish Church College.
	,,	Kedarnath	..	Bhowanipur Asutosh College.
	,,	Kisorimohan	..	City College.
	,,	Krishnachandra	..	Burdwan Raj College.
370	,,	Mrityunjay	..	Ripon College.
	,,	Nabagopal	..	City College.
	,,	Nagendranath	..	Daulatpur Hindu Academy.
	,,	Naliniranjan	..	Bhowanipur Asutosh College
	,,	Nirendranath	..	Non-collegiate student (Krishnagar College).
	,,	Panchanan	..	Non-collegiate student (Serampur College).
	,,	Paresnath	..	St. Paul's College.
	,,	Pasupati	..	Bhowanipur Asutosh College
	,,	Phanindranath	..	Ditto.
	,,	Prandhan	..	Bangabasi College.
380	,,	Priyalal	..	Bhowanipur Asutosh College.
	,,	Ramendranath	..	Scottish Church College.
	,,	Ramendranath	..	Vidyasagar College.
	,,	Sachindranath	..	City College.
	,,	Sailendranath	..	Ditto.
	,,	Saileschandra	..	Bangabasi College.
	,,	Santoshkumar	..	Scottish Church College.
	,,	Sasankasekhar	..	Berhampur Krishnath College.
	,,	Satischandra	..	Non-collegiate student (St. Paul's College).
	,,	Satkari	..	Bangabasi College.
390	,,	Sridhar	..	Non-collegiate student (St. Paul's College).
	,,	Sudhansusekhar	..	Scottish Church College.
	,,	Surendranath	..	Ripon College.
	,,	Syamapada	..	Bankura Wesleyan College.
	,,	Tarakdas	..	Scottish Church College.
	Chattoraj,	Sadananda	..	Hetampur Krishnachandra College.
	Chaudhri,	Huzurul Haq	..	Burdwan Raj College.
	Chaudhuri,	Amulyasankar	..	Chittagong College.
	,,	Baladeb	..	Non-collegiate student (Burdwan Raj College).
	,,	Bhupendranarayan	..	Cooch Behar Victoria College.
400	,,	Binayendranarayan	..	Mymensingh A. M. College.
	,,	Binaykrishna	..	St. Xavier's College.
	,,	Byomkes	..	Non-collegiate student (Rajshahi College).
	,,	Girigobardhan	..	Burdwan Raj College.
	,,	Jatindramohan	..	Berhampur Krishnath College.
	,,	Jitendranath	..	City College.
	,,	Jnanadaprasad	..	Daulatpur Hindu Academy.
	,,	Kalachand	..	Non-collegiate student (Rajshahi College).
	,,	Kalidas	..	Non-collegiate student (Burdwan Raj College).

	Chaudhuri, Kamalkrishna	..	Non-collegiate student (Presidency College).
410	,, Kirtibhushan	..	Non-collegiate student (Burdwan Raj College).
	,, Mahendramohan	..	Gauhati Cotton College.
	,, Manoranjan	..	Scottish Church College.
	,, Mohinimohan	..	Daulatpur Hindu Academy.
	,, Nagendranath	..	Cooch Behar Victoria College.
	,, Nareschandra	..	Mymensingh A. M. College.
	,, Pratulgobinda	..	Non-collegiate student (Vidyasagar College).
	,, Rabindralal	..	Chittagong College.
	,, Ramendrakumar	..	Vidyasagar College.
	,, Rameschandra	..	Barisal Brajamohan College.
420	,, Rameschandra	..	Daulatpur Hindu Academy.
	,, Sailadhar	..	Ripon College.
	,, Sasankamohan	..	Non-collegiate student (Faridpur Rajendra College).
	,, Satyaranjan	..	Comilla Victoria College
	,, Sudhansukumar	..	Non-collegiate student (City College).
	,, Sureschandra	..	Cooch Behar Victoria College.
	Chetia, Purnananda	..	Gauhati Cotton College.
	Coombes, H. G.	..	Non-collegiate student (Roll Cal. N. 303).
	Cornelius, Thos. D.	..	Scottish Church College.
	Dam, Anilkumar	..	Sylhet M C College.
430	Damray, Nirmalyabhushan	..	Non-collegiate student (City College)
	Dan, Adyanath	..	Non-collegiate student (Berhampur Krishnath College).
	,, Dwijendranath	..	Vidyasagar College.
	Daripa, Bhubanmohan	..	Bankura Wesleyan College.
	Das, Aghorchandra	..	Bangabasi College.
	,, Akshyakumar	..	Barisal Brajamohan College.
	,, Balaichandra	..	Vidyasagar College.
	,, Bela	..	Bethune College.
	,, Bhagabanchandra	..	Non-collegiate student (Gauhati Cotton College).
	,, Bhupendranath	..	Bangabasi College.
440	,, Bibhutibhushan	..	Chittagong College
	,, Binapani	..	Non-collegiate student (City College).
	,, Binodbihari	..	Sylhet M. C. College.
	,, Bipulchandra	..	Rajshahi College.
	,, Birendramohan	..	Non-collegiate student (Barisal Brajamohan College).
	,, Birendranath	..	Barisal Brajamohan College.
	,, Bireswar	..	Bhowanipur Asutosh College.
	,, Biswesswar	..	Non-collegiate student (Faridpur Rajendra College).
	,, Chittatosh	..	Scottish Church College.
	,, Chunilal	..	Bhowanipur Asutosh College.
450	,, Hemendrakumar	..	Comilla Victoria College.
	,, Jogendranath	..	Rajshahi College.
	,, Jharulal	..	Ripon College.
	,, Jyotischandra	..	Non-collegiate student (Rangpur Carmichael College).
	,, Kalipada	..	Chittagong College.
	,, Kanailal	..	Bhowanipur Asutosh College.
	,, Kanailal	..	Ditto.
	,, Kartikchandra	..	Vidyasagar College.
	,, Kedarnath	..	Mymensingh A. M. College.
	,, Kshirodchandra	..	Sylhet M. C College.
460	,, Lakshmiswar	..	Bangabasi College.
	,, Madhusudan	..	St. Paul's College.
	,, Makhanlal	..	Non-collegiate student (Rajshahi College).
	,, Manoranjan	..	Bankura Wesleyan College.
	,, Nalinikanta	..	Barisal Brajamohan College.
	,, Nalinimohan	..	Mymensingh A. M. College.
	,, Niharranjan	..	Chittagong College.
	,, Niradbaran	..	Feni College.
	,, Panchanan	..	Cooch Behar Victoria College.
	,, Pareschandra	..	Gauhati Cotton College.
470	,, Phanindralal	..	Chittagong College.
	,, Rabindrakumar	..	Non-collegiate student (Scottish Church College).
	,, Radhanath	..	Scottish Church College.
	,, Radhasyam	..	Burdwan Raj College.
	,, Radhikajiban	..	Vidyasagar College.
	,, Radhikamohan	..	Barisal Brajamohan College.
	,, Radhikaranjan	..	Sylhet M. C. College.
	,, Rajanikanta	..	Bhowanipur Asutosh College.
	,, Rajendranath	..	Hughli College.
	,, Rupansingh	..	Gauhati Cotton College.
480	,, Satischandra	..	Burdwan Raj College.
	,, Satyaranjan	..	Bangabasi College.
	,, Satyendranarayan	..	Berhampur Krishnath College.
	,, Subodhkumar	..	Vidyasagar College.
	,, Sudhansumohan	..	Non-collegiate student (Sylhet M. C. College).
	,, Sudhiranjan	..	Krishnagar College.
	,, Sureschandra	..	Chittagong College.
	,, Sureschandra	..	Vidyasagar College.
	,, Swadesranjan	..	Non-collegiate student (Vidyasagar College).
	Dasbaksi, Praphullakumar	..	Barisal Brajamohan College.
490	Daschaudhuri, Santiranjan	..	Ditto.

	Dasgupta, Atulkumar	..	Barisal Brajamohan College
	,, Barindranath	..	Ditto.
	,, Harshanath	..	Vidyasagar College.
	,, Jyotiprabha	..	Bethune College
	,, Jyotiprabha	..	Diocesan College
	,, Latika	..	Non-collegiate student (Bethune College).
	,, Maniklal	..	Berhampur Krishnath College.
	,, Manoranjan	..	Sylhet M. C. College.
	,, Nikhilranjan	..	Non-collegiate student (Comilla Victoria College).
500	,, Rabindranath	..	Sylhet M. C. College.
	,, Ranjitkumar	..	Non-collegiate student (Scottish Church College).
	Dassarma, Sudhansukumar	..	Daulatpur Hindu Academy.
	Dastidar, Jibendranath	..	Non-collegiate student (Comilla Victoria College.
	Datta, Abadhut	..	Hetampur Krishnachandra College.
	,, Asoknath	..	Scottish Church College.
	,, Atulchandra	..	Non-collegiate student (Rajshahi College).
	,, Bhagirathchandra	..	Chittagong College.
	,, Bholanath	..	Vidyasagar College.
	,, Biswanath	..	Barisal Brajamohan College.
510	,, Byomkes	..	St. Paul's College.
	,, Debendrachandra	..	Comilla Victoria College.
	,, Debendranath	..	Chittagong College.
	,, Dwarakanath	..	Vidyasagar College.
	,, Gopinath	..	Presidency College.
	,, Haranchandra	..	Barisal Brajamohan College
	,, Harimohan	..	Feni College
	,, Himansukumar	..	Non-collegiate student (Vidyasagar College).
	,, Hirendranath	..	Bhowanipur Asutosh College.
	,, Jadugopal	..	Feni College.
520	,, Jagadischandra	..	Gauhati Cotton College.
	,, Kalikumar	..	Vidyasagar College.
	,, Kaliprasanna	..	Mymensingh A. M. College.
	,, Kamalakanta	..	Bhowanipur Asutosh College
	,, Kisorilal	..	Vidyasagar College.
	,, Makhanlal	..	Non-collegiate student (Barisal Brajamohan College).
	,, Manabendra	..	Non-collegiate student (Vidyasagar College).
	,, Manoranjan	..	Non-collegiate student (Roll Hugh. N. 2).
	,, Phanindranath	..	Bhowanipur Asutosh College.
	,, Phulrenu	..	Barisal B. M. College.
530	,, Prabhaschandra	..	Rangpur Carmichael College.
	,, Radhaballabh	..	Non-collegiate student (Vidyasagar College).
	,, Radhagobinda	..	Burdwan Raj College.
	,, Sachindrachandra	..	Sylhet M. C. College.
	,, Sachindraprasad	..	Non-collegiate student (Daulatpur Hindu Academy).
	,, Sandhyalata	..	Bethune College.
	,, Sarojkumar	..	Non-collegiate student (City College).
	,, Sitalchandra	..	Ripon College.
	,, Subodhkumar	..	Vidyasagar College.
	,, Sudhirchandra	..	Bangabasi College.
540	,, Tarinicharan	..	Non-collegiate student (Daulatpur Hindu Academy).
	Dattachaudhuri, Anilchandra	..	Barisal Brajamohan College.
	,, Bimalchandra	..	St. Paul's College.
	,, Jnaneschandra	..	Mymensingh A. M. College.
	Dattagupta, Kshitischandra	..	Bangabasi College.
	Dattaray, Saileschandra	..	Ripon College.
	De, Abinaschandra	..	Bagerhat College.
	,, Birendrachandra	..	Bhowanipur Asutosh College.
	,, Dhirendralal, I	..	Chittagong College.
	,, Dhirendralal, II	..	Ditto.
550	,, Digendrachandra	..	Vidyasagar College.
	,, Gopendrakrishna	..	Sylhet M. C. College.
	,, Hemantakumar	..	Non-collegiate student (Daulatpur Hindu Academy).
	,, Indira	..	Diocesan College.
	,, Jagatbandhu	..	Chittagong College.
	,, Kiranbala	..	Non-collegiate student (Barisal Brajamohan College).
	,, Manindralal	..	Vidyasagar College
	,, Napharchandra	..	Burdwan Raj College.
	,, Narayanchandra	..	Bagerhat College.
	,, Narayanchandra	..	Non-collegiate student (St. Xavier's College).
560	,, Narendrachandra	..	Comilla Victoria College.
	,, Pareschandra	..	Vidyasagar College.
	,, Prabodhchandra	..	Sylhet M. C. College.
	,, Prakaschandra	..	Presidency College.
	,, Sachindrakumar	..	Non-collegiate student (Roll Cal, N. 332),
	,, Sanatkumar	..	Bangabasi College.
	,, Sarojendraprasad	..	Ripon College.
	,, Satischandra	..	Sylhet M. C. College.
	,, Sibendranath	..	Bagerhat College.
	,, Subodhchandra	..	Non-collegiate student (Roll Syl. N, 9),

570	De, Sudharani ..	Non-collegiate student (Comilla Victoria College).
	„ Sudhirkumar ..	Daulatpur Hindu Academy.
	„ Sunilchandra ..	Vidyasagar College.
	„ Upendrakumar ..	Sylhet M. C. College.
	Deb, Arabindaprakas ..	City College.
	„ Binayendraprasad ..	Non-collegiate student (Comilla Victoria College).
	„ Hemkumar ..	Mymensingh A. M. College.
	„ Rabindranath ..	Vidyasagar College.
	„ Rajkumar Debendranarayan ..	St. Paul's College.
	„ Satischandra ..	Sylhet M. C. College.
580	Debbarman, Binodbihari ..	Non-collegiate student (Comilla Victoria College).
	Debbiswas, Pratapchandra ..	Sylhet M. C College.
	Debi, Maya ..	Non-collegiate student (Bethune College).
	Debmisra, Harekrishna ..	Scottish Church College.
	Debnath, Harakumar ..	Chittagong College.
	„ Jnanendrachandra ..	Non-collegiate student (Vidyasagar College).
	Debsarma, Jadabchandra ..	Gauhati Cotton College.
	Desarkar, Anilkumar ..	Vidyasagar College.
	„ Harendramohan ..	Mymensingh A. M. College.
	Dewan, Ajitkumar ..	Bangabasi College.
590	Dewan Mustafizar Rahman ..	Rangpur Carmichael College.
	Dhar, Biswanath ..	Vidyasagar College.
	Dharanipragada Venkatarangayya ..	Non-collegiate student (Vidyasagar College).
	Dipnarain Singh ..	Ditto.
	D'Rozorio, Francis ..	St. Xavier's College.
	Elley, James F. G. ..	Ditto.
	Ezarat Ali Ahamad ..	Non-collegiate student (Ripon College).
	Fazl Karim ..	Feni College.
	Fazle Huq ..	Non-collegiate student (Chittagong College).
	Fazlur Rahman ..	Presidency College.
600	Fozlul Karim ..	Comilla Victoria College
	Fozlul Karim Ahmed ..	Chittagong College.
	Gangopadhyay, Aparnakumar ..	Vidyasagar College.
	„ Bhabeschandra ..	Comilla Victoria College.
	„ Bholanath ..	Sanskrit College.
	„ Bhujangabhushan	Bhowanipur Asutosh College.
	„ Dhirendranath ..	City College.
	„ Harendrakumar ..	Scottish Church College.
	„ Hiralal ..	Vidyasagar College.
	„ Jagadishchandra ..	Daulatpur Hindu Academy.
610	„ Kamakhyakumar ..	Vidyasagar College.
	„ Kanailal ..	Ditto.
	„ Nanigopal ..	Barisal Brajamohan College.
	„ Nirupamchandra ..	City College.
	„ Prabodhchandra ..	Daulatpur Hindu Academy.
	„ Ramgobinda ..	Non-collegiate student (Bhowanipur Asutosh College).
	„ Ramkumar ..	Scottish Church College.
	„ Satischandra ..	Barisal Brajamohan College.
	Ghatak, Bibhutiprasanna ..	Scottish Church College.
	„ Birendrakumar ..	Ditto.
620	Ghazi Mahfuz Ali ..	Islamia College.
	Ghosh, Anilkumar ..	Bankura Wesleyan College.
	„ Anilkumar ..	Bhowanipur Asutosh College.
	„ Apurbakrishna ..	Scottish Church College.
	„ Asaranjan ..	Ditto.
	„ Baidyanath ..	City College.
	„ Bhabajiban ..	Vidyasagar College.
	„ Bhabaniprasad ..	Bhowanipur Asutosh College.
	„ Bhagabatiprasad ..	St. Xavier's College.
	„ Bhramar ..	Non-collegiate student (Roll Cal. F N. 1).
630	„ Hirinchibanchhita ..	Non-collegiate student (City College).
	„ Dasarathi ..	Ripon College.
	„ Dhirendranarayan ..	Ditto.
	„ Gajaram ..	Burdwan Raj College.
	„ Gopalchandra ..	Bhowanipur Asutosh College.
	„ Gopeswar ..	Daulatpur Hindu Academy.
	„ Haragobinda .	Scottish Church College.
	„ Haripada ..	Rangpur Carmichael College.
	„ Himansuranjan ..	Presidency College.
	„ Jasodakinkar ..	Non-collegiate student (Feni College).
640	„ Kalipada .	Barisal Brajamohan College.
	„ Kamalkrishna ..	Bhowanipur Asutosh College.
	„ Mahadeb ..	Bangabasi College.
	„ Manmathanath .	Non-collegiate student (Vidyasagar College).
	„ Mrityunjay ..	Scottish Church College.
	„ Narendranath ..	Bhowanipur Asutosh College.
	„ Narendranath ..	Ripon College.
	„ Niranjan ..	Daulatpur Hindu Academy.
	„ Parijat ..	Diocesan College.
	„ Prabhatkumar ..	Vidyasagar College.
650	„ Pramathanath ..	Berhampur Krishnath College.
	„ Praphullakumar ..	Ripon College.
	„ Rajendranath ..	Non-collegiate student (Coach Behar Victoria College).
	„ Rasbihari	Vidyasagar College.
	„ Rasikchandra ..	Non-collegiate student (Barisal Brajamohan College).

	Ghosh, Sachindrakumar	..	Scottish Church College.
	,, Sailendrakumar	..	Bhowanipur Asutosh College.
	,, Sailendranath	..	Barisal Brajamohan College.
	,, Saileschandra	..	Rangpur Carmichael College.
	,, Sitansuranjan	..	Non-collegiate student (Roll Cal. N. 315).
660	,, Smarajitgopal	..	Non-collegiate student (St. Paul's College).
	,, Subodhranjan	..	Non-collegiate student (Barisal Brajamohan College).
	,, Sudhirchandra	..	Vidyasagar College.
	,, Sudhirkumar	..	Daulatpur Hindu Academy.
	,, Sudhirkumar	..	Non-collegiate student (Ripon College).
	,, Sunitibhushan	..	Ripon College.
	,, Swadesibhushan	..	City College.
	,, Trilochan	..	Non-collegiate student (Vidyasagar College).
	Ghoshal, Debendranath	..	Non-collegiate student (Scottish Church College).
	,, Pradyotkumar	..	Ripon College.
670	Gogal, Sarunan	..	Gauhati Cotton College.
	Golam Mowla	..	Presidency College.
	Gomes, Daniel	..	St. Xavier's College.
	,, John	..	Ditto.
	,, Peter Paul	..	Ditto.
	,, Silvester	..	Ditto.
	Gopi Krishna Khemka	..	Scottish Church College.
	Goswami, Abanimohan	..	Non-collegiate student (Roll Bank. N. 3).
	,, Anupnath	..	Serampur College.
	,, Bibhutibhushan	..	Non-collegiate student (Roll Baul. N. 1).
680	,, Harendranath	..	Bankura Wesleyan College.
	,, Haripada	..	Vidyasagar College.
	,, Jyotischandra	..	Serampur College.
	,, Kanailal	..	Bankura Wesleyan College.
	,, Purnachandra	..	Ditto.
	,, Rabindrakumar	..	Non-collegiate student (Ripon College).
	Guha, Aswinikumar	..	Non-collegiate student (Roll Bar. N. 25).
	,, Atulchandra		Barisal Brajamohan College.
	,, Chandrakanta	..	Mymensingh A. M. College.
	,, Dhirendrakumar	..	Ditto.
690	,, Jitendrakumar	..	Barisal Brajamohan College.
	,, Nagendranath	..	City College.
	,, Nikhilranjan	..	Mymensingh A. M. College.
	,, Pareschandra	..	Ripon College.
	,, Rabindranath	..	Ditto.
	,, Santi	..	Barisal Brajamohan College.
	Guharay, Anilkumar	..	Bhowanipur Asutosh College.
	,, Kesabchandra	..	Feni College.
	,, Pratapchandra	..	Mymensingh A. M. College.
	,, Sudhansumohan	..	Feni College.
700	Gupta, Balaramananda	..	Ripon College.
	,, Birendrakumar	..	Vidyasagar College.
	,, Byomkes	..	Ditto.
	,, Gurudas	..	Scottish Church College.
	,, Hiralal	..	Barisal Brajamohan College.
	,, Hiralal	..	Non-collegiate student (Feni College).
	,, Jibansumohan	..	Presidency College.
	,, Jnanendrabhushan	..	Berhampur Krishnath College.
	,, Jyotirmayi	..	Non-collegiate student (Roll Cal. F. N. 27).
	,, Kshirodbandhu	..	Non-collegiate student (Rangpur Carmichael College).
710	,, Mahendranath	..	Non-collegiate student (Faridpur Rajendra College).
	,, Manmathanath	..	Comilla Victoria College.
	,, Parimalkumar	..	Vidyasagar College.
	,, Paritosh	..	Non-collegiate student (City College).
	,, Prasantakumar	..	Vidyasagar College.
	,, Priyalal	..	Barisal Brajamohan College.
	,, Ramautar	..	Non-collegiate student (Vidyasagar College).
	,, Sailendrakumar	..	Ditto.
	,, Satyananda	..	Berhampur Krishnath College.
	,, Sudhansukumar	..	Non-collegiate student (Rajshahi College).
720	Guptabhaya, Nibaranchandra	..	Cooch Behar Victoria College.
	Habibullah Miah	..	Non-collegiate student (Feni College).
	Habibur Rohman	..	Sylhet M. C. College.
	Hafez Ahmed Chowdhuri	..	Chittagong College.
	Hajra, Harendrakumar	..	Vidyasagar College.
	Haldar, Birendrakrishna	..	Bangabasi College.
	,, Bhupalchandra	..	Bhowanipur Asutosh College.
	,, Bhushanchandra	..	Ripon College.
	,, Hemantakumar	..	Non-collegiate student (Vidyasagar College).
	,, Satischandra	..	Non-collegiate student (Bagerhat College).
730	Hanuk H. Kisku	..	St. Paul's College.
	Hor, Jitendralal	..	Vidyasagar College.
	,, Purnachandra	..	Scottish Church College.
	Hormuz Ali Sarker	..	Rajshahi College.
	Huard, Theodore Shankeroday	..	Non-collegiate student (St. Paul's College).
	Hurmatullah Shah	..	Islamia College.
	Iman Ali Sarker	..	Ditto.
	Imanuddin Ahmad	..	Rangpur Carmichael College.
	Indrasan Prosad	..	City College.
	Jafar Ahmad	..	Chittagong College.

740	Jalal Uddin Ahmed	..	Feni College.
	Jana, Jatadhari	..	Non-collegiate student (Roll Cal. N. 23).
	,, Lalitkumar	..	Non-collegiate student (Roll Bank N. 4).
	Kafil Uddin Ahamed	..	Non-collegiate student (Rajshahi College).
	Kajuri, Kalipada	..	Daulatpur Hindu Academy.
	Kakati, Jatindranath	..	Non-collegiate student (Gauhati Cotton College).
	Kalita, Narendrachandra	..	Gauhati Cotton College.
	Kar, Susilkumar	..	Vidyasagar College.
	Karchaudhuri, Bhaktaranjan	..	Chittagong College.
	Karjee, Birendranarayan	..	Bhowanipur Asutosh College.
750	Karmakar, Khagendrakumar	..	Non-Collegiate student (Comilla Victoria College).
	,, Nagendranath	..	Vidyasagar College.
	K. A. Sankara Pillai	..	Ditto.
	Kayal, Surendranath	..	Ditto.
	Kazi Abdur Rashid	..	City College.
	Kazi Hafizullah	..	St. Paul's College.
	Kedarmull Brahmin	..	Gauhati Cotton College.
	Khabibar Rahman Mandal	..	Non-collegiate student (Rajshahi College).
	Khadem Hossain	..	Barisal Brajamohan College.
	Khan, Bhupendranath	..	Non-collegiate student (Rajshahi College).
760	Khan Talukdar Shamsul Haque	..	Barisal Brajamohan College.
	Khandaker Md. Hatem Ali	..	Hughli College.
	Khaskil, Sasikumar	..	Ripon College.
	Khaund, Saurindraram	..	Scottish Church College.
	Khettry, Jagannath	..	Ditto.
	Khondoker Dalilor Rahman	..	Non-collegiate student (City College).
	Khorshed Alam	..	Ripon College.
	K. M. Atikar Rahman	..	Faridpur Rajendra College.
	Kole, Rajendranath	..	Non-collegiate student (Roll Bur. N. 1).
	Kothary, Fatehchand	..	St. Xavier's College.
770	Krishna Rao Kantipudi	..	Vidyasagar College.
	Kumar, Panchanan	..	Non-collegiate student (Presidency College).
	Kundu, Bandhabchandra	..	Non-collegiate student (Comilla Victoria College).
	,, Gopalkrishna	..	Berhampur Krishnath College.
	,, Jnanendranath	..	Non-collegiate student (City College).
	,, Radhakrishna	..	Ripon College.
	Laha, Parbaticharan	..	Vidyasagar College.
	Lahiri, Birendrakumar	..	Bhowanipur Asutosh College.
	,, Ramchandra	..	Non-collegiate student (Rangpur Carmichael College).
	,, Subodhkumar	..	Vidyasagar College.
780	Laik, Narayanchandra	..	Scottish Church College.
	Lal Mea, H	..	Comilla Victoria College.
	Lala Madanmohan Varma	..	Vidyasagar College.
	Laskar, Jyotischandra	..	Mymensingh A. M. College.
	L. Subramaniam	..	St. Xavier's College.
	M. Abdus Sattar	..	Rajshahi College.
	Mafizuddin Ahmed	..	Rangpur Carmichael College.
	Mahabir Prasad Jhunjhunwala	..	Presidency College.
	Mahajan, Maheschandra	..	Non-collegiate student (Gauhati Cotton College).
	Mahammad Ali	..	Sylhet M. C. College.
790	Mahammad Alim Ullah	..	Ditto.
	Mahammed Abual Khayer	..	Feni College.
	Mahammed Jubed Ali	..	Mymensingh A. M. College.
	Maharmmod Ali	..	Non-collegiate student (Gauhati Cotton College).
	Mahammod Sayed	..	Comilla Victoria College.
	Mahammod Ullah	..	Barisal Brajamohan College.
	Mahanti, Siddheswar	..	City College.
	,, Sureschandra	..	Bhowanipur Asutosh College.
	Mahata, Janmejay	..	Bankura Wesleyan College.
	Mahibur Rahman Mia	..	Comilla Victoria College.
800	Maitra, Brajendrakisor	..	Vidyasagar College.
	,, Hemendrakumar	..	Krishnagar College.
	,, Prabodhchandra	..	Faridpur Rajendra College.
	,, Rabindranath	..	Ditto.
	,, Rabindranath	..	Presidency College.
	,, Satyendranath	..	Scottish Church College.
	,, Sitendramohan	..	Non-collegiate student (Vidyasagar College).
	,, Susilkumar	..	Scottish Church College.
	Majed Ali Khan	..	Islamia College.
	Majibul Haidor	..	Feni College.
810	Majumdar, Abinaschandra	..	Mymensingh A. M. College.
	,, Ajitkumar	..	Rangpur Carmichael College.
	,, Amarendranath	..	Daulatpur Hindu Academy.
	,, Anupamohandra	..	Scottish Church College.
	,, Bibhutibhushan	..	Vidyasagar College.
	,, Brajendranath	..	Bagerhat College.
	,, Dhirendramohan	..	Bangabasi College.
	,, Harikumar	..	Comilla Victoria College.
	,, Jogeschandra	..	Feni College.
	,, Kalidas	..	Non-collegiate student (Ripon College).
820	,, Kshirodchandra	..	Chittagong College.
	,, Kumudbandhu	..	Faridpur Rajendra College.
	,, Manoranjan	..	Barisal Brajamohan College.
	,, Mohinimohan	..	Comilla Victoria College.
	,, Nilratan	..	City College.

	Majumdar,	Niradbaran	.. Feni College.
	,,	Nirmalchandra	.. Non-collegiate student (Barisal Brajamohan College).
	,,	Nirmalkanti	.. Feni College.
	,,	Phanibhushan	.. Vidyasagar College.
	,,	Praphullakamal	.. Chittagong College.
830	,,	Rabindranarayan	.. St. Xavier's College.
	,,	Rajendranath	.. Scottish Church College.
	,,	Ramkrishna	.. Hughli College.
	,,	Ranajitkumar	.. Sylhet M. C. College.
	,,	Satischandra	.. Comilla Victoria College.
	,,	Sisirbindu	.. Non-collegiate student (Comilla Victoria College).
	,,	Siteskumar	.. Cooch Behar Victoria College.
	,,	Subodhchandra	.. Barisal Brajamohan College.
	,,	Sucharu	.. City College.
	,,	Sudhamay	.. St. Paul's College.
840	,,	Sudhindramohan	.. Ripon College.
	,,	Sudhirkrishna	.. Sylhet M. C. College.
	,,	Tarakumar	.. St. Xavier's College.
	,,	Tarapada	.. City College.
	Malakar,	Birendrachandra	.. Vidyasagar College.
	Mallik,	Jagannath	.. Ripon College.
	,,	Manoranjan	.. Bagerhat College.
	,,	Rajkumar	.. Non-collegiate student (Feni College).
	,,	Ranajitkumar	.. Vidyasagar College.
	,,	Sukeschandra	.. Hughli College.
850	,,	Upendrachandra	.. St. Xavier's College.
	Mandal,	Anathnath	.. Ripon College.
	,,	Dhirendranath	.. Ditto.
	,,	Harisadhan	.. Vidyasagar College.
	,,	Jibankrishna	.. Ripon College.
	,,	Kanakbhushan	.. Vidyasagar College.
	,,	Kananchandra	.. Bangabasi College.
	,,	Panchanankumar	.. Hughli College.
	,,	Paresnath	.. Scottish Church College.
	,,	Pasupati	.. Ripon College.
860	,,	Phanibhushan	.. Vidyasagar College.
	,,	Prabodhchandra	.. Bangabasi College.
	,,	Ramkanta	.. Vidyasagar College.
	,,	Santoshkumar	.. Hughli College.
	,,	Satischandra	.. Ripon College.
	,,	Satyakinkar	.. Scottish Church College.
	,,	Surendranath	.. Bagerhat College.
	,,	Suryyakanta	.. Scottish Church College.
	Maniruddin Ahmed		.. Mymensingh A. M. College.
	Manna, Jogendranath		.. Scottish Church College.
870	Mansur Ali Mea		.. Rajshahi College.
	Maqbodur Rahman		.. Feni College.
	Masihuddin Ahmad		.. Presidency College.
	Masman Uddin Chaudhurie		.. Sylhet M. C. College.
	Maswood Ghazi		.. Ditto.
	Maulik,	Hrishikes	.. City College.
	,,	Jyotiprasanna	.. Rangpur Carmichael College.
	,,	Satyendranath	.. Ditto.
	,,	Sibapada	.. Bagerhat College.
	Maung Kyein Lwin		.. Non-collegiate student (Roll Cal. N. 334).
880	Maung Lun Pe		.. Non-collegiate student (Roll Cal. N. 1).
	Mazidar Rahman		.. Ripon College.
	M. D. Vergheso		.. Serampur College.
	Md. Abdul Bais		.. Feni College.
	Md. Abdul Gafur		.. City College.
	Md. Abdul Jalil		.. Mymensingh A. M. College.
	Md. Abdul Kaddus Bhuian		.. Islamia College.
	Md Abdul Munaim		.. Berhampur Krishnath College.
	Md. Akbor Ali Biswas		Non-collegiate student (City College).
	Md. Arshad Ali		.. Sylhet M. C. College.
890	Md. Azizar Rahman		.. City College.
	Md. Enayetullah Ansari		.. Ripon College.
	Md. Foyzar Rahman		.. Mymensingh A. M. College.
	Md. Ghullam Mustaffa		.. Non-collegiate student (Rajshahi College).
	Md. Habibar Rahman		.. Islamia College.
	Md. Idris Ali		.. Sylhet M. C. College.
	Md. Ismail		.. Non-collegiate student (Presidency College).
	Md. Mohsen Ali Khan		.. Rangpur Carmichael College.
	Md. Mahfuzuz Zaman		.. Islamia College.
	Md. Mehar Ali		.. Comilla Victoria College.
900	Md. Mosbah Uddin		.. Presidency College.
	Md. Motaher Hossain Khan		.. Barisal Brajamohan College.
	Md. Mozammel Haque		.. Non-collegiate student (Rajshahi College).
	Md. Mujibar Rahaman		.. Rajshahi College.
	Md. Nazem Hossain		.. Islamia College.
	Md. Nurul Huda		.. Ditto.
	Md. Osman Gani Pramanik		.. Rangpur Carmichael College.
	Md. Rahim Uddin Changder		.. Non-collegiate student (Rajshahi College).
	Md. Raisuddin Mollah		.. Bagerhat College.
	Md. Saberuddin		.. Gauhati Cotton College.
910	Md. Salamat Hossain		.. Islamia College.
	Md. Serajuddin Khan		.. Rajshahi College.
	Md. Serajul Haque		.. Presidency College.

	Md. Sufior Rahman Mea	..	Barisal Brajamohan College.
	Md. Sulaiman Mia	..	Presidency College.
	Md. Sultan Mian	..	Feni College.
	Md. Tafazzal Hossain	..	Islamia College.
	Md. Toim Uddin Pramanik	..	Rajshahi College.
	Md. Yusuf	..	Presidency College.
	Md. Yusuf Uddin Mia	..	Non-collegiate student (Ripon College).
920	Md. Zahural Haque		St. Xavier's College.
	Medepalli Venkataramanamurty	..	Ex-student, St. Xavier's College.
	Melling Symon	..	Gauhati Cotton College.
	Meer Farrokh Hossain	..	City College.
	Meer Mahbub Ali	..	Rajshahi College.
	M. Fazlul Huq	..	St. Xavier's College.
	Mehazuddin Ahmed	..	Ditto.
	Mg. Htin Gyaw	..	Non-collegiate student (Roll Cal. N. 307).
	Mir Abdul Maleque	..	City College.
	Mishra, Bhuwaneshwar	..	Ditto.
930	Misra, Dhirendranath	..	Bangabasi College.
	,, Jogeschandra	..	Non-collegiate student (City College).
	Mitra, Ajitkumar	..	Hughli College.
	,, Anantalal	..	Vidyasagar College.
	,, Asimbandhu	..	Burdwan Raj College.
	,, Baidyanath	..	Vidyasagar College.
	,, Bimalkrishna	..	St. Paul's College.
	,, Mukundalal	..	Barisal Brajamohan College.
	,, Nandalal	..	Non-collegiate student (Vidyasagar College).
	,, Niharkumar	..	Scottish Church College.
940	,, Prabodhchandra	..	Feni College.
	,, Rabindranath	..	Scottish Church College.
	,, Rabindranath	..	Vidyasagar College.
	,, Rabindranath	..	Non-collegiate student (City College).
	,, Rameschandra	..	Daulatpur Hindu Academy.
	,, Sachindrakumar	..	St. Paul's College.
	,, Sailendranath, II	..	Vidyasagar College.
	,, Santosh	..	Ditto.
	,, Susilkumar	..	Scottish Church College
	,, Tapendranath	..	Vidyasagar College.
950	,, Tarapada	..	Ditto.
	Modasswer Ali	..	Barisal Brajamohan College.
	Mofizuddin Ahmed	..	Feni College.
	Mohamed Yusuf	..	Ripon College.
	Mohammad Abdul Anal	..	Bagerhat College.
	Mohammad Abdur Rahim	..	Presidency College.
	Mohammad Akram Abdul Qadir	..	St. Xavier's College.
	Mohammad Habibur Rahman	..	Non-collegiate student (Ripon College).
	Mohammad Hossain Ali	..	St. Xavier's College.
	Mohammad Nurul Islam Chaudhuri		Ripon College.
960	Mohammad Rustum Ali	..	Mymensingh A. M. College.
	Mohammad Saadat Hossain	..	Islamia College.
	Mohammed Abdul Hamid	..	Comilla Victoria College.
	Mohammed Ahasain Akhtar Hossain		City College.
	Mohammed Ali Hossain	..	Barisal Brajamohan College.
	Mohammed Ayenuddin Talukder	..	Islamia College.
	Mohammed Zakeullah	..	Non-collegiate student (Rajshahi College).
	Mokhlaser Rahman	..	Feni College.
	Moktar Ali Meah	..	Cooch Behar Victoria College.
	Mondal, Kshitish Chandra	..	Non-collegiate student (Serampur College).
	Mondol, Niranjan	..	St. Paul's College.
970	Moquesed Ali Biswas	..	Berhampur Krishnath College.
	Mozharal Hoque	..	Feni College.
	Mubarak Hussain	..	Mymensingh A. M. College.
	Muhammad Abdun Nur	..	Sylhet M. C. College.
	Muhammad Abdul Bari	..	Mymensingh A. M. College.
	Muhammad Abdus Samad	..	Ditto.
	Muhammad Emdad Ali	..	Non-collegiate student (Rangpur Carmichael College.)
	Muhammad Ibrahim	..	Barisal Brajamohan College.
	Muhammad Kasim Uddin	..	Mymensingh A. M. College.
980	Muhammad Shahen Shah	..	Islamia College.
	Muhibbur Rahman Khan	..	Chittagong College.
	Mukherjee, Stella Usharani	..	Diocesan College.
	Mukhopadhyay, Amulyakumar	..	Non-collegiate student (Ripon College).
	,, Anilkumar, II	..	Non-collegiate student (Vidyasagar College).
	,, Arindam	..	Bangabasi College.
	,, Arunkisor	..	St. Xavier's College.
	,, Asutosh	..	Hughli College.
	,, Baidyanarayan	..	Bhowanipur Asutosh College.
	,, Bhujangabhushan	..	Vidyasagar College.
990	,, Bhupendranath	..	Non-collegiate student (Vidyasagar College).
	,, Bibhucharan	..	St. Xavier's College.
	,, Bijaykrishna	..	Bankura Wesleyan College.
	,, Bimalananda	..	Burdwan Raj College.
	,, Binaymadhab	..	Rangpur Carmichael College.
	,, Birendranath	..	Berhampur Krishnath College.
	,, Bishadharan	..	Non-collegiate student (Vidyasagar College).
	,, Brajabilas	..	Bankura Wesleyan College.
	,, Byomkes	..	Non-collegiate student (Vidyasagar College).
	,, Chhakarilal	..	Hetampur Krishnachandra College.
1000	,, Chittaranjan	..	Mymensingh A. M. College.

	Mukhopadhyay,	Debendranath ..	Non-collegiate student (Dagerhat College).
	,,	Dhirendranath ..	Non-collegiate student (Barisal Brajamohan College).
	,,	Dhirendranath, I ..	Non-collegiate student (Vidyasagar College).
	,,	Dhirendranath, II	Vidyasagar College.
	,,	Durgadas ..	Ditto.
	,,	Durgasankar ..	Burdwan Raj College.
	,,	Gadadhar ..	Scottish Church College.
	,,	Ganganarayan ..	Burdwan Raj College.
	,,	Gopendrakrishna ..	Non-collegiate student (St. Paul's College).
1010	,,	Haranath ..	Bankura Wesleyan College.
	,,	Hemendranath ..	Daulatpur Hindu Academy.
	,,	Hrishikes ..	City College.
	,,	Jagadischandra ..	Bagerhat College.
	,,	Jnanendrabhushan	Burdwan Raj College.
	,,	Kalipada ..	Comilla Victoria College.
	,,	Kamaleschandra ..	Non-collegiate student (Burdwan Raj College).
	,,	Krishnachandra ..	Scottish Church College.
	,,	Kulendramohan ..	Vidyasagar College.
	,,	Krishnamohan ..	Bhowanipur Asutosh College.
1020	,,	Nabendusundar ..	Scottish Church College.
	,,	Nandagopal ..	Vidyasagar College.
	,,	Nanigopal ..	Non-collegiate student (Scottish Church College).
	,,	Narayandas ..	St. Paul's College.
	,,	Nripendramohan ..	St. Xavier's College.
	,,	Niranjan ..	Ripon College.
	,,	Pankajendranath ..	Ditto.
	,,	Pankajnath ..	Scottish Church College.
	,,	Pannalal ..	Vidyasagar College.
	,,	Phatikchandra ..	Hetampur K. C. College.
1030	,,	Pramathanath ..	Hughli College.
	,,	Praphullakumar ..	Berhampur Krishnath College.
	,,	Praphullakumar ..	Scottish Church College.
	,,	Prasadkumar ..	Ditto.
	,,	Rabilochan ..	Bankura Wesleyan College.
	,,	Rabindrakumar ..	Serampur College.
	,,	Radhanath ..	Non-collegiate student (Rajshahi College).
	,,	Ramchandra ..	Hetampur Krishna Chandra College.
	,,	Ramendranath ..	Krishnagar College.
	,,	Ranajitkumar ..	Mymensingh A. M. College.
1040	,,	Rasbihari ..	Non-collegiate student (Scottish Church College).
	,,	Sachindranath ..	Ripon College.
	,,	Sachindranath, II ..	Vidyasagar College.
	,,	Sailendranath ..	Bankura Wesleyan College.
	,,	Sailendranath, I ..	Vidyasagar College.
	,,	Saileskumar ..	Krishnagar College.
	,,	Sambhuchandra ..	Scottish Church College.
	,,	Sanatkumar ..	Ditto.
	,,	Sankariprasad ..	Bankura Wesleyan College.
	,,	Satinath ..	Vidyasagar College.
1050	,,	Satyabrata ..	Scottish Church College.
	,,	Satyananda ..	Bhowanipur Asutosh College.
	,,	Sibapada ..	Daulatpur Hindu Academy.
	,,	Sibapada ..	St. Paul's College.
	,,	Sibchandra ..	Hughli College.
	,,	Sitikes ..	Non-collegiate student (Roll Cal. N. 6.)
	,,	Sudhirchandra ..	City College.
	,,	Sureschandra ..	Barisal Brajamohan College.
	,,	Tapandhan ..	Ripon College.
	,,	Tapaskumar ..	St. Paul's College.
1060	,,	Tinkari ..	Vidyasagar College.
	,,	Tikendrajit ..	Barisal Brajamohan College.
	Mulkutur Rahman	..	Islamia College.
	Mundle, Christina	..	Dacca College.
	Munsi, Ramendramohan	..	Rangpur Carmichael College.
	Muzaffar Ahmed	..	Bangabasi College.
	Muzibuddin Ahmed	..	Gauhati Cotton College.
	Muzibur Rahaman Khan	..	Mymensingh A. M. College.
	Nag, Birendralal	..	Rangpur Carmichael College.
	,, Ganeschandra	..	Scottish Church College.
1070	,, Jitendranath	..	Berhampur Krishnath College.
	,, Kshitischandra	..	Comilla Victoria College.
	,, Matilal	..	Daulatpur Hindu Academy.
	,, Radhanath	..	Vidyasagar College.
	,, Sunitiprabha	..	Bethune College.
	,, Susilranjan	..	Bhowanipur Asutosh College.
	Naha, Labanyakumar	..	Mymensingh A. M. College.
	,, Sudhirchandra	..	Comilla Victoria College.
	Nanda, Baikunthanath	..	Serampur College.
	Nandi, Harischandra	..	Feni College.
1080	,, Mahadeb	..	Bhowanipur Asutosh College.
	,, Mahimaprakas	..	Ripon College.
	,, Manoranjan	..	Chittagong College.
	,, Saradagopal	..	Non-collegiate student (Vidyasagar College).
	,, Sudhirkanta	..	Rajshahi College.
	,, Syamsundar	..	Scottish Church College.
	N. S. Lakshmi Narayan	..	Vidyasagar College.
	Naskar, Kisorimohan	..	Ripon College.
	Nath, Ajitkumar	..	Scottish Church College.

	Nath, Harikumar	.. Feni College.
1090	,, Hiralal	.. Ditto.
	,, Jaminikanta	.. Barisal Brajamohan College.
	,, Pitram	.. Gauhati Cotton College.
	,, Radhikamohan	.. Vidyasagar College.
	Nawab Ali Mia	.. Comilla Victoria College.
	Nawab Miyan	.. Feni College.
	Nazer Abdus Salam	.. Islamia College.
	Niyogi, Birendrakumar	.. City College.
	,, Dineschandra	.. Non-collegiate student (Vidyasagar College).
	,, Gadadharcharan	.. Rajshahi College.
1100	,, Sisirkumar	.. Bankura Wesleyan College.
	,, Sudhondukumar	.. Scottish Church College.
	Nizamuddin Ahmed	.. Islamia College.
	Nur Ahmed	.. Chittagong College.
	Nurul Huq	.. Comilla Victoria College.
	Nural Islam	.. Feni College.
	Ojha, Satyanarayan	.. Cooch Behar Victoria College.
	Oman Ghani Mandal	.. Islamia College.
	Pal, Abanikumar	.. Scottish Church College.
	,, Amulyaratan	.. Daulatpur Hindu Academy.
1110	,, Amulyaratan	.. Vidyasagar College.
	,, Birendranath	.. Krishnagar College.
	,, Debendrachandra	.. Bhowanipur Asutosh College.
	,, Jitendrachandra	.. Barisal Brajamohan College.
	,, Jitendranath	.. City College.
	,, Jyotischandra	.. Vidyasagar College.
	,, Nityananda	.. Berhampur Krishnath College.
	,, Prakaschandra	.. Non-collegiate student (Mymensingh A. M. College).
	,, Pramathanath	.. Bangabasi College
	,, Rajendrachandra	.. Mymensingh A. M. College.
1120	,, Ramanimohan	.. Vidyasagar College.
	,, Rameschandra	.. Ditto.
	,, Rasmohan, II	.. Ditto.
	,, Sasankasekhar	.. Bankura Wesleyan College.
	Palchaudhuri, Krishnanath	.. Ripon College.
	,, Nilkrishna	.. Scottish Church College.
	,, Rabindrakrishna	.. Non-collegiate student (Vidyasagar College).
	Pain, Nitaichand	.. Ripon College.
	,, Susilkumar	.. Vidyasagar College.
	Pan, Chunilal	.. Scottish Church College.
1130	Panda, Bibhupada	.. Bankura Wesleyan College.
	,, Umakanta	.. Bangabasi College.
	Pandey, Bhubneshwar	.. Ditto.
	Pandit, Gobindachandra	.. City College.
	Paniruddin Ahmed	.. Rangpur Carmichael College.
	Panja, Jaminiranjan	.. Vidyasagar College.
	,, Radhanath	.. Ditto.
	Pathak, Holiram	.. Gauhati Cotton College.
	,, Kameswar	.. Ditto.
	,, Uddhabchandra	.. Ditto.
1140	Phukan, Sukhendranath	.. Non-collegiate student (Roll Gau. N. 1.)
	Poddar, Kshirodbhusan	.. Non-collegiate student (Rajshahi College).
	,, Nathuram	.. Vidyasagar College.
	,, Nityagopal	.. City College.
	,, Satischandra	.. Vidyasagar College.
	Polisetti Mamillaiah	.. Ditto.
	Pradhan, Byomkes	.. Bankura Wesleyan College.
	,, Khagendranath	.. Ditto.
	Purohit, Kalprasanna	.. Chittagong College.
	Quazi Md. Ashraf Ali	.. Barisal Brajamohan College.
1150	Quazi Sharafat Ali	.. Islamia College.
	Raghunath Dhar Sharma	.. Vidyasagar College.
	Rai, Balbahadur	.. Gauhati Cotton College.
	Raharay, Barindrakumar	.. Non-collegiate student (Mymensingh A. M. College).
	Raja, Kshemankar	.. Bhowanipur Asutosh College.
	Rajeshwari Prasad Sinha	.. Non-collegiate student (City College).
	Rakshit, Makhanlal	.. Non-collegiate student (Ripon College).
	,, Pradyotkumar	.. Mymensingh A. M. College.
	Ram Lal Chaturvedy	.. Vidyasagar College.
	Rarhi, Akshaykumar	.. Bangabasi College.
1160	Rauth, Atulchandra	.. Mymensingh A. M. College.
	,, Manmathanath	.. Vidyasagar College.
	,, Pramathanath	.. Ditto.
	Ray, Abanikumar	.. Ripon College.
	,, Ambujaksha	.. Serampur College.
	,, Asutosh	.. Non-collegiate student (Bhowanipur Asutosh College).
	,, Aswinikumar	.. Vidyasagar College.
	,, Bagalasundari	.. Non-collegiate student (Roll Mym. F N. 1).
	,, Banamali	.. Non-collegiate student (Bagarhat College).
	,, Bhupendrakrishna	.. Feni College.
1170	,, Bibhabati	.. Bethune College.
	,, Bijaysankar	.. Non-collegiate student (Ripon College).
	,, Bimalkumar	.. City College.
	,, Bishnupada	.. Scottish Church College.
	,, Dasarathi	.. Non-collegiate student (Bhowanipur Asutosh College).
	,, Durgadas	.. Bankura Wesleyan College.
	,, Durgasankar	.. Scottish Church College.

	Ray,	Ganeschandra	.. Vidyasagar College.
	,,	Gopiballabh	.. Ditto.
	,,	Harinarayan	.. Non-collegiate student (Comilla Victoria College).
1180	,,	Hemantakumar	.. Non-collegiate student (City College).
	,,	Hirendranath	.. Chittagong College.
	,,	Jatindranath	.. Bankura Wesleyan College.
	,,	Jitendramohan	.. Ditto.
	,,	Jitendranarayan	.. Mymensingh A. M. College.
	,,	Manmatharanjan	.. Comilla Victoria College.
	,,	Mohinimohan	.. Vidyasagar College.
	,,	Nageschandra	.. Scottish Church College.
	,,	Nilmadhab	.. Cooch Behar Victoria College.
	,,	Phanibhushan	.. Non-collegiate student (Rajshahi College).
1190	,,	Prabhansukumar	.. Daulatpur Hindu Academy.
	,,	Prabodhchandra	.. Bangabasi College.
	,,	Pranabkumar	.. Non-collegiate student (Burdwan Raj College).
	,,	Praphullachandra	.. Non-collegiate student (Cooch Behar Victoria College).
	,,	Ramdas	.. Non-collegiate student (Ripon College).
	,,	Ramendrakanta	.. Presidency College.
	,,	Sachindranath	.. Ripon College.
	,,	Sachiprasad	.. St. Xavier's College.
	,,	Sadanandanarayan	.. St. Paul's College.
	,,	Samarendramohan	.. Ditto.
1200	,,	Santoshkumar	.. Non-collegiate student (Vidyasagar College).
	,,	Saurindranath	.. Mymensingh A. M. College.
	,,	Sudhindranath	.. Rangpur Carmichael College.
	,,	Sukumar	.. Scottish Church College.
	,,	Sunilkumar	.. Non-collegiate student (City College).
	,,	Syamapada	.. Bankura Wesleyan College.
	,,	Thakurdhan	.. Sylhet M. C. College.
	Raychaudhuri,	Ajaykumar	.. Bhowanipur Asutosh College.
	,,	Anilendranath	.. Presidency College.
	,,	Bagalaprasanna	.. Gauhati Cotton College.
1210	,,	Binaykrishna	.. Vidyasagar College.
	,,	Binaykrishna	.. Ditto.
	,,	Chittaranjan	.. Comilla Victoria College.
	,,	Debeschandra	.. Scottish Church College.
	,,	Kalinath	.. Vidyasagar College.
	,,	Kalipada	.. Bhowanipur Asutosh College.
	,,	Kesabnath	.. Scottish Church College.
	,,	Makhanlal	.. Vidyasagar College.
	,,	Mohinimohan	.. City College.
	,,	Praphullakumar	.. Ripon College.
1220	,,	Saratchandra	.. Bagerhat College.
	,,	Sasadhar	.. Gauhati Cotton College.
	,,	Saurendranath	.. Non-collegiate student (Scottish Church College).
	,,	Sunilbaran	.. Chittagong College.
	Richards,	Catherine Olive	.. Non-collegiate student (Roll. Cal. F. N. 28).
	Roy,	Suvendu Singh	.. St. Xavier's College.
	Rustam Ali		.. Barisal Brajamohan College.
	Rutherford,	Michael E.	.. Non-collegiate student (Roll Cal. N. 290).
	S. Abdur Rouf		.. Non-collegiate student (Roll Rang. N. 4).
	S. Bashir Ahsan Khan		.. Presidency College.
1230	S. Md. Aminul Islam Chowdhury		.. Feni College.
	Sadhu,	Jaladhinath	.. City College.
	,,	Nirmalchandra	.. Vidyasagar College.
	Saha,	Abanikumar	.. Non-collegiate student (Rajshahi College).
	,,	Asutosh	.. City College.
	,,	Binodbihari	.. Ditto.
	,,	Dwarakanath	.. Comilla Victoria College.
	,,	Harimohan	.. Non-collegiate student (Faridpur Rajendra College).
	,,	Jasodakumar	.. Vidyasagar College.
	,,	Kalicharan	.. Ditto.
1240	,,	Kartikchandra	.. Ditto.
	,,	Manomohan	.. Comilla Victoria College.
	,,	Mohinimohan	.. City College.
	,,	Nikunjabihari	.. Comilla Victoria College.
	,,	Nripendramohan	.. Non-collegiate student (Barisal Brajamohan College).
	,,	Tarakchandra	.. Ditto.
	Saharay,	Satischandra	.. St. Paul's College.
	Saiyed Abu Ahmed Azharul Huque		Islamia College.
	Sahu,	Niranjan	.. Bankura Wesleyan College.
	Salahuddin Ahmed		.. Non-collegiate student (Presidency College).
1250	Samaddar,	Bijaylal	.. Non-collegiate student (Roll Cal. N. 276).
	,,	Praphullanath	.. Scottish Church College.
	,,	Rathindranath	.. City College.
	Santra,	Goshthabihari	.. Serampur College.
	Sanyal,	Asutosh	.. Mymensingh A. M. College.
	,,	Birendramohan	.. Non-collegiate student (Rajshahi College).
	,,	Bireswar	.. Vidyasagar College.
	,,	Sachindrakumar	.. Berhampur Krishnath College.
	,,	Sarasibhushan	.. Non-collegiate student (Rajshahi College).
	,,	Satyabrata	.. Berhampur Krishnath College.
1260	,,	Sibdas	.. Vidyasagar College.
	,,	Sukumar	.. Bhowanipur Asutosh College.
	,,	Susilkanti	.. Non-collegiate student (Rajshahi College).

	Saraf, Tarachand	..	City College.
	Sarkar, Amulyakumar		Ripon College.
	,, Amulyaratan	..	Hetampur Krishnachandra College.
	,, Birendrachandra	..	Mymensingh A M College.
	,, Gaurgopal	..	Vidyasagar College
	,, Haripada	..	Comilla Victoria College.
	,, Jatindralal	..	Scottish Church College
1270	,, Jatindranath	..	Barisal Brajamohan College
	,, Kalyankumar	..	Ripon College
	,, Krishnadas	.	Bankura Wesleyan College
	,, Lalitmohan	..	Non collegiate student (Bangabasi College).
	,, Manindranath	..	Berhampur Krishnath College
	,, Monoj Mohon	..	St Paul's College
	,, Mrinalkanti	..	Barisal Brajamohan College.
	,, Nagendranath	..	Faridpur Rajendra College.
	,, Nanikumar	..	Cooch Behar Victoria College.
	,, Narendrachandra	..	Ripon College
1280	,, Nareschandra	..	Hughli College
	,, Nareschandra	..	Rangpur Carmichael College
	,, Prabhaschandra	..	Vidyasagar College
	,, Praphullakumar	..	St Xavier's College
	,, Rammohan	..	City College
	,, Rajchandra	..	St Paul's College
	,, Ramanikanta	.	Berhampur Krishnath College
	,, Sachindramohan	..	City College
	,, Sachindranath	..	Non collegiate student (Rajshahi College)
	,, Saradindu	..	Ripon College
1290	,, Satindranath	..	Barisal Brajamohan College
	,, Surendranath	..	Non collegiate student (Rajshahi College)
	Sarkhel, Ramanimohan	..	Non collegiate student (Barisal Brajamohan College)
	Sarma, Punyeswar	..	Gauhati Cotton College
	,, Saratchandra	..	Ditto
	,, Tarunchandra	..	Cooch Behar Victoria College
	,, Tarunchandra	..	Gauhati Cotton College
	Satapathi, Kshitishchandra	..	Bankura Wesleyan College
	Sau, Bishnupada	..	Hughli College
	Sen, Abhaypada	.	Burdwan Raj College
1300	,, Amalchandra	..	Non collegiate student (Vidyasagar College).
	,, Amarendranath, II	..	Ditto.
	,, Anilkumar	..	Daulatpur Hindu Academy
	,, Batumurari	..	Vidyasagar College.
	,, Bhaktendranath	..	City College
	,, Bijankumar	..	Ripon College
	,, Bimalkumar	..	Hughli College
	,, Binodbihari	..	Daulatpur Hindu Academy
	,, Chittaranjan	.	Chittagong College.
	,, Debabrata	..	Bangabasi College
1310	,, Dinendrachandra	..	Scottish Church College
	,, Harimohan	..	Berhampur Krishnath College.
	,, Hariprasad	..	Feni College
	,, Indubhushan	..	Vidyasagar College.
	,, Jitendralal	..	Non collegiate student (Chittagong College)
	,, Kamala	..	Non collegiate student (Roll Cal. F N 23).
	,, Kshitischandra	..	Barisal Brajamohan College.
	,, Mohitkumar	..	Bangabasi College.
	,, Nakshatrakumar	.	Feni College
	,, Nibha	.	Bethune College.
1320	,, Nisikanta	..	Non-collegiate student (Rajshahi College)
	,, Prakritiprasanna		Ditto
	,, Rabindranath	.	Barisal Brajamohan College
	,, Rabindranath	..	Scottish Church College
	,, Rabindranath	.	St Xavier's College
	,, Radhikaprasanna	..	Barisal Brajamohan College.
	,, Rajendranath	..	Non collegiate student (City College).
	,, Ramendranath	..	Bagerhat College
	,, Sachikumar	..	Non collegiate student (Bhowanipur Asutosh College)
	,, Santoshlal	..	Bangabasi College.
1330	,, Saratkumar	..	Rangpur Carmichael College
	,, Sibabrata	..	Bhowanipur Asutosh College.
	,, Snehalata	..	Non-collegiate student (Roll Cal. F. N. 29).
	,, Subodhchandra	..	Scottish Church College.
	,, Subodhkumar	..	Burdwan Raj College.
	,, Sudhansubhushan	..	Scottish Church College.
	,, Sudhirchandra	..	Hetampur Krishnachandra College.
	,, Sukumar	..	Vidyasagar College.
	,, Sureschandra	..	Feni College
	,, Sureschandra	..	Sylhet M C. College.
1340	,, Umasankar	..	Scottish Church College.
	Sengupta, Amiya	..	Bethune College
	,, Amulyakumar	..	Barisal Brajamohan College.
	,, Amulyakumar	..	Bangabasi College
	,, Anilkumar	..	Non collegiate student (Rajshahi College)
	,, Arunkumar	..	Rangpur Carmichael College
	,, Bankimchandra	..	Daulatpur Hindu Academy
	,, Bhupendranath	..	Sylhet M C College.
	,, Harendranath	..	Barisal Brajamohan College.
	,, Haripada	..	Scottish Church College.

1350	Sengupta, Jyotirmay	..	City College.
	,, Kamala	..	Barisal Brajamohan College.
	,, Kedarnath	..	Feni College.
	,, Manindrakumar	..	Vidyasagar College.
	,, Mohitmohan	..	Ditto.
	,, Pareschandra	..	Rangpur Carmichael College.
	,, Rabindrakumar	..	Bhowanipur Asutosh College.
	,, Ranajitkumar	..	Non-collegiate student (Rajshahi College).
	,, Rasaranjan	..	Barisal Brajamohan College.
	,, Renu	..	Non-collegiate student (Roll Cal. F. N. 6).
1360	,, Sachindrakumar	..	Barisal Brajamohan College.
	,, Sailaschandra	..	Hughli College.
	,, Santimay	..	St. Xavier's College.
	,, Sarojkumar	..	Scottish Church College.
	,, Sasankakumar	..	Ditto.
	,, Sisirchandra	..	Bhowanipur Asutosh College.
	,, Subodhchandra	..	Rangpur Carmichael College.
	,, Sudhirranjan	..	Vidyasagar College.
	,, Susilkumar	..	Bangabasi College.
	,, Upendrakumar	..	Vidyasagar College.
1370	Senraychaudhuri, Sisirkumar	..	Comilla Victoria College.
	Serajuddin Ahmed	..	St. Paul's College.
	Serjan Khan	..	Burdwan Raj College.
	Shah Nazibul Hoque	..	Barisal Brajamohan College.
	Shaik Ahmed	..	Islamia College.
	Shaikh Abdul Aziz	..	Ditto.
	Shaikh Abdus Sattar	..	Ditto.
	Shaikh Dabiruddin Ahmed	..	Bagerhat College.
	Shaikh Shahadat Ali	..	Presidency College.
	Shaikh Sujat Hossain	..	Islamia College.
1380	Shamsuddin Ahamed	..	City College.
	Shamsujjoha Mallik	..	Non-collegiate student (Rajshahi College).
	Shamsul Alam	..	Barisal Brajamohan College.
	Shamsul Hoq	..	Ripon College.
	Shamsul Khayr	..	Non-collegiate student (Islamia College).
	Shamsur Rahman Khandakar	..	Comilla Victoria College.
	Shivanandan Ambastha	..	Bangabasi College.
	Shyamsal Hoque	..	Comilla Victoria College.
	Sikdar, Bhupendranath	..	Bagerhat College.
	Sikidhar, Harendranath	..	Sylhet M. C. College.
1390	Sil, Rajendrachandra	..	Non-collegiate student (Comilla Victoria College).
	,, Rajendranath	..	Bangabasi College.
	,, Suryyanarayan	..	Hughli College.
	Singh, Haobam Iboongozaima	..	Gauhati Cotton College.
	Sinha, Basantakumar	..	Burdwan Raj College.
	,, Binanbhushan	..	Bankura Wesleyan College.
	,, Birendrajit	..	Vidyasagar College.
	,, Gobindabijay	..	Non-collegiate student (Ripon College).
	,, Kalachand	..	Sylhet M. C. College.
	,, Manimohan	..	Ripon College.
1400	,, Panchkari	..	Burdwan Raj College.
	,, Rajbanshi	..	Ripon College.
	,, Rameschandra	..	Ditto.
	,, Sudhansumohan	..	Bankura Wesleyan College.
	,, Sunilkumar	..	Non-collegiate student (Roll Cal. N. 277).
	,, Tarinikumar	..	Chittagong College.
	,, Upendra	..	Sylhet M. C. College.
	Sinhachaudhuri, Jyotirindranarayan		Non-collegiate student (Presidency College).
	Sinharay, Baidyanath	..	Rangpur Carmichael College.
	,, Satyaranjan	..	Non-collegiate student (Sanskrit College).
1410	Sitaram Sigtia	..	Non-collegiate student (Vidyasagar College).
	Sk. Abdul Jabbar	..	Islamia College.
	Sohrab Rustomji Modi	..	St. Xavier's College.
	Som, Hirankumar	..	Non-collegiate student (Ripon College).
	,, Parasnath	..	Non-collegiate student (Barisal Brajamohan College).
	,, Radhaballabh	..	Serampur College.
	,, Saileskumar	..	Hughli College.
	Sufi Tofael Ahmad	..	Ripon College.
	Sur, Kalidas	..	Ditto.
	Surydeo Sinha	..	Vidyasagar College.
1420	Sutradhar, Jagatbandhu	..	City College.
	,, Narendrachandra	..	Comilla Victoria College.
	Swar, Surendranath	..	Daulatpur Hindu Academy.
	Syed Abul Khair	..	St. Xavier's College.
	Syed Ahsan Ali	..	Burdwan Raj College.
	Syed Ali Irteza	..	Islamia College.
	Syed Amin Ullah	..	Non-collegiate student (Feni College).
	Syed Bazlar Rahaman	..	City College.
	Syed Borhan Uddin	..	Non-collegiate student (Islamia College).
	Syed Farhad Ali	..	Islamia College.
1430	Syed M. I. Md. Muzaffer Hossain	..	Chittagong College.
	Syed Mahbubol Hossain	..	Mymensingh A. M. College.
	Syed Matlub Ali	..	Non-collegiate student (Islamia College).
	Syed Mosta Gawsal Haque	..	Barisal Brajamohan College.
	Syed Sobhan Ahmad	..	Burdwan Raj College.
	T. K. Dommen	..	Serampore College.
	T. K. Ittanpillai	..	St. Paul's College.
	Tafzalur Rahman Choudhury	..	Islamia College.
	Tagore, Prasantanath	..	Scottish Church College.

	Tahasin Uddin Ahamed	..	Non-collegiate student (Bangabasi College).
1440	Taiab Ali	..	Non-collegiate student (Roll Com. N. 3).
	Taib Ali	..	Comilla Victoria College.
	Talukdar, Tarapada	..	Cooch Behar Vicoria College.
	Thakur, Kamalaksha	..	Hetampur Krishna Chandra College.
	,, Srikanta	..	Non-collegiate student (Daulatpur Hindu Academy).
	Thet Maung	..	Non-collegiate student (Roll. Cal. N. 333).
	Tigga, Joseph	..	St. Xavier's College.
	Tripathi, Syamapada	..	Non-collegiate student (Ripon College).
	Varughese, Korah	..	St. Paul's College.
	Wasty, Sadhucharan	..	Non-collegiate student (Vidyasagar College).
1450	Wedad Abul Moarif	..	St. Xavier's College.
	Zarif Ahmed Ali Ahsan	..	Islamia College.
	Ziaul Haq	..	Bangabasi College.
1453	Ziaul Hoq	..	Chittagong College.

The undermentioned candidates, who are permitted to appear at the last B.A. Examination in one or more subjects, are declared to have passed the B.A. Examination in the subject or subjects under which their names appear :—

Passed in English only.

1	Mukhopadhyay, Susilkumar	..	Non-collegiate student (Roll Cal. N. 14).

Passed in English and Bengali only.

	A. S. M. Ayyub	..	Non-collegiate student (Roll Cal. N. 278).
	Bandyopadhyay, Balaichandra	..	Non-collegiate student (Roll Cal. N. 291).
	Basumallik, Sibadas	..	Non-collegiate student (Roll Cal. N. 337).
	Chattopadhyay, Panchugopal	..	Non-collegiate student (Roll Cal. N. 12).
	,, Susilchandra	..	Non-collegiate student (Roll Cal. N. 29).
	Das, Mihirbhushan	..	Non-collegiate student (Roll Cal. N. 286).
	Deb, Susilchandra	..	Non-collegiate student (Roll Cal. N. 331).
	Patra, Nibaranchandra	..	Non-collegiate student (Roll Bank. N. 2).
	Raychaudhuri, Sisirkumar	..	Non-collegiate student (Roll. Cal. N. 287).
10	Saha, Krishnakinkar	..	Non-collegiate student (Roll Ber. N. 5).
	Sarkar, Nagendramohan	..	Non-collegiate student (Roll Com. N. 1).
12	Sen, Prasantakumar	..	Non-collegiate student (Roll Cal. N.281).

The examinations of the following candidates are cancelled for using unfair means in the examination hall. Additional punishment, if any, imposed is noted against the name of each :—

B. A. Examination, 1931.

	Name with Roll Number and College.	Orders.
1	Tarapada Chakrabarti (Regtd. No. 26 of 1927-28), Cal. 70, Sanskrit College.	The examination of the candidate for 1931 is cancelled and the candidate is further debarred from appearing at any examination of the University in 1932.
2	Sachindrabhushan Bhattacharyya (Regtd. No. 3505 of 1920-21), Cal. 151, Bangabasi College.	Ditto.
3	Sudhansubhushan Dasgupta (Regtd. No. 1034 of 1927-28), Cal. 558, Presidency College.	Ditto.
4	Panchanan Sen (Regtd. No. 3116 of 1926-27), Cal. 1103, Vidyasagar College.	The examination of the candidate for 1931 is cancelled.
5	Paresnath Mallik (Regtd. No. 7093 of 1924-25), Cal. N. 94, City College (non-collegiate student).	Ditto.
6	Prabhaschandra Sarkar (Regtd. No. 3483 of 1925-26), Baul. No. 36, Rajshahi College (non-collegiate student).	Ditto.
7	Mahammed Masudozzaman (Regtd. No. 2809 of 1927-28), Baul. N. 69, Rajshahi College (non-collegiate student).	The examination of the candidate for 1931 is cancelled and the candidate is further debarred from appearing at any examination of this University in 1932.
8	Hiralal Majumdar (Regtd. No. 4943 of 1926-27), Com. 28, Comilla Victoria College.	Ditto.
9	Mahammad Ayakul Ali (Regtd. No 708 of 1924-25), Com. 97, Comilla Victoria College.	Ditto.
10	Kshirodchandra Saha (Regtd. No. 3315 of 1925-26), Far. 13, Faridpur Rajendra College.	The examination of the candidate for 1931 is cancelled.

11	Abu Sayeed (Regtd. No. 5835 of 1925-26), Feni 63, Feni College.	The examination of the candidate for 1931 is cancelled and the candidate is further debarred from appearing at any examination of this University before 1935.
12	Harendrakumar Nag (Regtd. No. 3167 of 1923-24), Mym. 40, Mymensingh A. M. College.	The examination of the candidate for 1931 is cancelled.
13	Bholanath Chakrabarti (Regtd. No. 5041 of 1926-27), Cal. 1185, Vidyasagar College.	The examination of the candidate for 1931 is cancelled and the candidate is further debarred from appearing at any examination of this University in 1932.
14	Makhanlal Das (Regtd. No. 3661 of 1925-26), Bar. N. 4, Barisal B. M. College (non-collegiate student).	Ditto.
15	Hiralal Chakrabarti (Regtd. No. 1541 of 1927-28), Bar. N. 5, Barisal B. M. College (non-collegiate student).	Ditto.
16	Ramendrachandra Raychaudhuri (Regtd. No. 2780 of 1926-27), Baul. N. 58, Rajshahi College (non-collegiate student).	The examination of the candidate is cancelled.
17	Md. Aminullah (Regtd. No. 6198 of 1925-26), Feni 60, Feni College.	The examination of the candidate is cancelled and the candidate is further debarred from appearing at any examination of this University in 1932.
18	Sultan Mia, Kazi (Regtd. No. 6241 of 1925-26), Feni 64, Feni College.	Ditto.
19	Panchanan Ray (Regtd. No. 3304 of 1925-26), Far. 7, Faridpur Rajendra College.	The examination of the candidate is cancelled and the candidate is further debarred from appearing at any examination of this University before 1935.
20	Jogendranath Biswas (Regtd. No. 3222 of 1925-26), Far. 8, Faridpur Rajendra College.	Ditto.
21	Digambarsankar Mahalanabis (Regtd. No. 3109 of 1924-25), Far. 21, Faridpur Rajendra College.	Ditto.
22	Birendramohan Gupta (Regtd. No. 3096 of 1924-25), Far. 29, Faridpur Rajendra College.	Ditto.
23	Sureschandra Datta (Regtd. No. 3294 of 1926-27), Far. 32, Faridpur Rajendra College.	Ditto.

N. SEN,

Controller of Examinations.

Board of Intermediate and Secondary Education, Dacca.

NOTIFICATIONS.

Ramna, Dacca, the 10th July 1931.

No. 3438.—It is hereby notified for the information of authors and publishers that the Standing Committee in Islamic Studies of the Board is likely to meet about the middle of August next to consider text-books in Urdu, Arabic Literature (prose and poetry), Arabic Grammar and Composition, Islamic History, Fiqh and Aqaid for classes VII and VIII of High Madrasas in Bengal for the year 1932. They are invited to forward to this office five copies of any books that they may have to offer for consideration of the Committee as text-books.

No. 3450.—It is hereby notified for the information of authors and publishers that the various Standing Committees of the Board are likely to meet this year about the middle of August next to consider text-books for the High School and Intermediate Examinations to be conducted by the Board in 1934. They are invited to forward to this office five copies of any books that they may have to offer for consideration of the Committees either as text-books or as books recommended for guidance.

A. RAHMAN, *Secretary.*

NOTIFICATION.

Departmental Examination, 1931.

Calcutta, the 7th August 1931.

(For First Grade Vernacular Training Schools in Western Bengal).

The first and second Departmental Examinations of First Grade Training Schools in the Presidency and Burdwan Divisions will be held on the following days:—

Tuesday,	1st December 1931	..	2 papers.
Wednesday,	2nd " "	..	2 "
Thursday,	3rd " "	..	2 "
Friday,	4th " "	..	1 paper.
Saturday,	5th " "	..	2 papers.
Monday,	7th " "	..	2 "

2. The examinations will be held at the First Grade Training Schools at Calcutta and Hooghly.

3. The following classes of candidates will be eligible for the first Departmental Examination:—

(*i*) Students of the second year class of First Grade Training Schools.

(*ii*) *Bona fide* teachers who failed to satisfy the examiners at a previous first Departmental Examination.

(*iii*) *Bona fide* teachers holding second-grade Vernacular Mastership certificates.

(*iv*) *Bona fide* teachers who, having passed either (*a*) the Primary *in situ* examination, or (*b*) a public examination of the Middle Vernacular standard, or (*c*) some higher examination, have also passed the final examination of a *Guru*-training School conducted on a Middle Vernacular basis, and have thereafter served as teachers for at least one year.

(*v*) *Bona fide* teachers who have not passed any of the examinations referred to above as (*a*), (*b*) and (*c*), but have passed the final examinations of a *Guru*-training School conducted on a Middle Vernacular basis, after going through the prescribed term of training as regular students of such schools, and have thereafter worked as teachers for at least three years.

4. The following classes of candidates will be eligible for the second Departmental Examination:—

(*i*) Students of the third year class of First Grade Training Schools.

(*ii*) *Bona fide* teachers who have passed the First Departmental Examination and have worked as teachers for one year since passing it.

(*iii*) *Bona fide* teachers who hold second-grade certificates earned prior to 1902.

5. Teachers holding first-grade or second-grade Vernacular Mastership certificates under the old system prior to 1902 may be examined in any or all of the following groups or subjects of the second or first Departmental Examination, respectively, under the new system:—

(*i*) Elementary Science.
(*ii*) Practical Geometry and Drawing.
(*iii*) The Art of Teaching.
(*iv*) Manual Work and Drill.
(*v*) English—"Direct Method of Teaching English."

6. Failed students of Normal and *Guru*-training Schools may be permitted to sit for the examination as private candidates a second time within two years from the date of their failure, provided that those who have failed in the practical, or in both theoretical and practical parts of the examination, have served continuously for at least six months in a recognised school as teachers and are certified by the District Inspector of Schools to be satisfactory teachers.

The condition of continuous teaching for at least six months shall not apply to those who have passed in the practical part of the examination and propose to take only the theoretical part of the examination again.

7. Candidates who are not students of a Government First Grade Training School are required to send by the 7th September 1931 a written application for admission to the examinations, together with a fee of one rupee, to the head master of the school at which they elect to be examined. Full information will be furnished by the head masters of those schools on application.

8. Complete lists of candidates for examination should be forwarded by head masters of Training Schools to the undersigned by the 14th September 1931. The fees received from candidates must be deposited in the local treasury, and the *chalans* sent to this office along with the lists of candidates.

9. The current session of Training Schools will end on the 31st December 1931 and the new session will begin on the 2nd January 1932.

M. MITRA, *Principal*,
David Hare Training College (offg.).

Orders by the Syndicate of the Calcutta University.

NOTICE.

Senate House, the 31st July 1931.

The following orders of the Syndicate of the Calcutta University are published for general information:—

Malayalam is accepted as a second language for the women candidates appearing at the Matriculation Examination of the Calcutta University.

A. N. MUKHERJEE, *Registrar*.

Orders by the Vice-Chancellor and Syndicate of the Calcutta University.

NOTICES.

Senate House, the 7th August 1931.

The privilege of recognition enjoyed by the Malikhali H. E. School in the district of Barisal has been withdrawn with effect from the 1st January 1932. The school is, however, permitted to send up candidates for the Matriculation Examination in 1932.

A. N. MUKHERJEE, *Registrar*.

Senate House, the 6th August 1931.

1. Sudhirchandra Das, son of Babu Akshaykumar Das, resident of Chikandi (Faridpur), and a candidate for the I.Sc. Examination of 1931 from the Bangabasi College, Calcutta, with Roll Cal. No. 474, is debarred, for gross misconduct, from appearing at any University Examination before 1934.

2. Khagendranath Kole, son of Babu Atulchandra Kole, resident of Jhikra (Howrah), and a candidate for the I.Sc. Examination of 1931 from the Bangabasi College as a non-collegiate student, with Roll Cal. N. No. 73, is debarred, for gross misconduct, from appearing at any University Examination before 1934.

3. Abdul Wahid Khan, son of the late Munshi Abdul Majid Khan, resident of Majpara (Dacca), and who passed the Matriculation Examination as a private student from the Faridpur centre with Roll Far. P. No. 1, in the First Division, is debarred, for gross misconduct, from appearing at any University Examination before 1934.

N. SEN,
Controller of Examinations.

Board of Intermediate and Secondary Education, Dacca.

Ramna, the 29th July 1931.

ERRATA.

In the list of successful candidates at the examinations of the Board of Intermediate and Secondary Education, Dacca, held in March 1931, published in the *Calcutta Gazette*, dated the 28th May 1931—

High School Examination.

Second Division

for

Sengupta, Sudhirchandra ... 18-3 Pogose School.

please read

Sengupta, Subhidchandra ... 18-3 Pogose School.

High Madrasa Examination.

First Division

for

84 Muhammad Main Husain Bhuiyan 23-1 Hazrabari Madrasa.

please read

84 Muhammad Mian Husain Bhuiyan 23-1 Hazrabari Madrasa.

for

88 Muhammad Nzimuddin ... 19-10 Hammadia Madrasa.

please read

88 Muhammad Nazimuddin ... 19-10 Hammadia Madrasa.

A. RAHMAN, *Secretary.*

The Calcutta Gazette

THURSDAY, AUGUST 13, 1931.

Part II

Advertisements.

Notices.

Advertisements, Notices, etc., intended for insertion in this Part of the Gazette cannot be received after noon of Saturday.

IMPERIAL BANK OF INDIA.

Statement of the affairs of the Imperial Bank of India on the 31st July 1931.

LIABILITIES.

	Rs.	A.	P.
Subscribed Capital ..	11,25,00,000	0	0
Capital paid up ..	5,62,50,000	0	0
Reserve ..	5,42,50,000	0	0
Public Deposits ..	21,26,89,000	0	0
Other Deposits ..	65,02,43,000	0	0
Loans against securities per contra ..	....		
Loans from the Government of India under section 20 of the Paper Currency Act, against Inland bills discounted and purchased per contra ..	....		
Contingent liabilities ..	....		
Sundries ..	1,12,59,000	0	0
	98,46,91,000	0	0

ASSETS.

	Rs.	A.	P.
Government Securities ..	28,68,35,000	0	0
Other authorized securities under the Act ..	2,76,77,000	0	0
Ways and Means Advances to the Government of India ..	....		
Loans ..	9,05,16,000	0	0
Cash Credits ..	28,65,74,000	0	0
Inland bills discounted and purchased ..	3,78,53,000	0	0
Foreign bills discounted and purchased ..	42,05,000	0	0
Bullion ..	....		
Dead stock ..	2,72,37,000	0	0
Liability of constituents for contingent liabilities per contra ..	....		
Sundries ..	51,49,000	0	0
Balances with other Banks ..	1,75,000	0	0
	76,62,21,000	0	0
Cash ..	21,84,70,000	0	0
	98,46,91,000	0	0

The above balance sheet includes :—

	£
Deposits in London ..	860,500
Advances and Investments in London ..	952,000
Cash and balances at other Banks in London ..	15,400

Percentage 24·09.

Bank rate 6 per cent.

Bank rate raised to 7 per cent. as from 6th August 1931.

OSBORNE A. SMITH,
K. M. MACDONALD,
Managing Governors.

(1648—1)

LAND SALE NOTICES.

Notification A.

NOTICE is hereby given, under sections 6 and 13, Act XI of 1859, that the undermentioned estates and shares of estates in the district of Bakarganj will be put up for sale at the office of the Collector of that district on the 24th September 1931, at 12 noon, for arrears of revenue and other demands due on or before 30th Jaista 1338 B.S. which by law are realizable as arrears of land revenue.

When in columns 5, 7 and 9 of the following statement it is stated that only a share is to be sold, it is to be understood that a separate account is kept for that share :—

Tauzi number.	Name of mahal and pargana.	Sadar jama of whole estate.	Whether the whole estate is to be sold.	If only a share is to be sold, specification of such share or shares.	Names of proprietors of property to be sold.	If only a share is to be sold, the sadar jama of such share.	If the whole estate is to be sold, the arrears due from it	If only a share is to be sold, the arrears due from it.
1	2	3	4	5	6	7	8	9
		Rs. A. P.				Rs. A. P.	Rs. A. P.	Rs. A. P.
802	Mahal Mir Samsuddin, pargana Bangorora.	894 14 11	..	9a. 8g. 1c. 1kt. share covered by separate account No. 1 will be sold. All other shares than that specified will be excluded from sale.	Ishan Chandra Das, Manager, Court of Wards, Mr. R. G. G. Brown's estates, and another.	512 11 8	..	7 15 6
1555	Taluk Mahammad Jamir, pargana Bazorgomedpur.	559 11 11	Whole	....	Biswesswar Chakrabarty and others.	..	8 8 7	..
1729	Taluk Chandra Sekhar Chakrabarty, pargana Chandradvip.	2,531 6 6	Do.	....	Nibaran Chandra Banerji, common manager to the estate of Gopal Chandra Chakrabarty and others.	..	236 8 6	..
3851	Zemindari share 10½ gds., pargana Salimabad.	3,280 11 4	Do.	....	Tarak Nath Ray Chaudhury and others.	..	111 14 5	..
4509	Char Sharikal, pargana Bangorora.	1,586 12 0	..	9a. 3g. 1c. 1kt. share covered by separate account No. 1 will be sold. All other shares than that specified will be excluded from sale.	Nishi Kanta Ganguly and another.	909 1 4	..	4 11 6
4554	Kismat Kewabunia, pargana Aurangpur.	1,320 1 3	Whole ..	....	Sourindra Nath Mitra and another.	..	167 2 6	..
4605	Char Samasdi Baligao, pargana Saistanagar.	2,197 0 0	Do.	....	Satish Chandra Das and others.	..	131 5 3	..
4622	Char Kushangal, tappah Azimpur.	647 6 6	Do.	....	Promada Debi ..	..	47 0 0	..
4798	Char Algi, pargana Ratnadi-Kalikapur.	4,446 0 0	Do.	....	Hakimoddi Kazi and another.	..	4,306 15 8	..
4818	Char Raghunathdi, pargana Chandradvip.	2,148 0 0	Do.	....	Pyari Mohan Sen and another.	..	600 0 0	..
4819	Char Tona, pargana Chandradvip.	1,496 0 0	Do.	....	Shushila Sundari Chakrabarty, manager for her minor son Kshirode Chandra Chakrabarty.	..	900 0 0	..
5229	Char Ratanpura, pargana Uttar Shahabazpur.	3,394 0 0	Do.	....	Dharani Nath Basak and others.	..	2,107 2 10	..
5285	Char Joynagar, pargana Uttar Shahabazpur.	29,427 0 0	Do.	....	Saradindra Mukherji.	..	9,927 0 0	..
6457	Srikanta Ray Chaudhury, zemindari share 1 a. 6g. 2c. 2 kt., pargana Aurangpur.	1,195 10 0	Do.	....	Manorama Debi and others.	..	74 1 0	..
6459	Kali Prosad Ray Chaudhury, zemindari share 13g. 1 c. 1 kt., pargana Aurangpur.	580 7 6	Do.	....	Brojakanta Ray Chaudhury.	..	72 3 0	..

Bakarganj, the 6th August 1931.

S. C. BASU, Addl. Collector.

Notification A.

NOTICE is hereby given, under sections 6 and 13, Act XI of 1859, that the undermentioned estate and shares of estate in the district of Bogra will be put up for sale at the office of the Collector of that district on the 26th September 1931, at 12 noon, for arrears of revenue and other demands which by law are realizable as arrears of land revenue :—

Tauzi No.	Name of mahal and pargana.	Sadar jama of whole estate.	Whether the whole estate is to be sold.	If only a share is to be sold, specification of such share or shares.	Names of proprietors of property to be sold.	If only a share is to be sold, the sadar jama of such share.	If the whole estate is to be sold, the arrears due from it.	If only a share is to be sold, the arrears due from it.
1	2	3	4	5	6	7	8	9
		Rs. A. P.					Rs. A. P.	
6	Murail, pargana Shekarsha.	7,527 13 7	The whole estate will be sold.	....	Syed Abdur Roby Choudhury and others.	..	746 10 8	..

Bogra, the 4th August 1931.

A. B. DE, Collector.

Notification A.

NOTICE is hereby given, under sections 6 and 13, Act XI of 1859, that the undermentioned estate and shares of estate in the district of Bogra will be put up for sale at the office of the Collector of that district on the 26th September 1931, at 12 noon, for arrears of revenue and other demands which by law are realizable as arrears of land revenue.

When in columns 5, 7 and 9 of the following statement it is stated that only a share is to be sold, it is to be understood that a separate account is kept for that share :—

Tauzi No.	Name of mahal and pargana.	Sadar jama of whole estate.	Whether the whole estate is to be sold.	If only a share is to be sold, specification of such share or shares.	Names of proprietors of property to be sold.	If only a share is to be sold, the sadar jama of such share.	If the whole estate is to be sold, the arrears due from it.	If only a share is to be sold, the arrears due from it.
1	2	3	4	5	6	7	8	9
		Rs. A. P.				Rs. A. P.		Rs. A. P.
175 Separate account No. 1.	Kharija Pakuria, pargana Apoil.	5,756 3 0	No ..	Separate account No. 1 of estate No. 175, *i.e.*, 8 annas share of mauza Manik and others, police-station Panchbibi, Bhemai, Kusalia and others, police-station Jaipurhat, Tela, Badal and others, police-station Khetlal, will be sold. All other shares than that specified will be excluded from the sale.	Surabala Choudhurani.	2,879 1 0	..	151 3 1

Bogra, the 4th August 1931.

A. B. DE, Collector.

Notification A.

NOTICE is hereby given, under sections 6 and 13, Act XI of 1859, that the undermentioned estate and shares of estate in the district of Bogra will be put up for sale at the office of the Collector of that district on the 26th September 1931, at 12 noon, for arrears of revenue and other demands which by law are realizable as arrears of land revenue :—

Tauzi No.	Name of mahal and pargana.	Sadar jama of whole estate.	Whether the whole estate is to be sold.	If only a share is to be sold, specification of such share or shares.	Names of proprietors of property to be sold.	If only a share is to be sold, the sadar jama of such share.	If the whole estate is to be sold, the arrears due from it.	If only a share is to be sold, the arrears due from it.
1	2	3	4	5	6	7	8	9
		Rs. A. P.					Rs. A. P.	
724	Taraf Domrai and others, pargana Chaplia.	16,202 3 0	The whole estate will be sold.	....	Kumar Protiva Nath Roy and others.	..	1,779 15 4	..

Bogra, the 4th August 1931.

A. B. DE, Collector.

Notification A.

NOTICE is hereby given, under sections 6 and 12, Act XI of 1859, that the undermentioned estate and share of estate in the district of Bogra will be put up for sale at the office of the Collector of that district on the 26th September 1931, at 12 noon, for arrears of revenue and other demands which by law are realizable as arrears of land revenue.

When in columns 5, 7 and 9 of the following statement it is stated that only a share is to be sold, it is to be understood that a separate account is kept for that share :—

Touzi number.	Name of mahal and pargana.	Sadar jama of whole estate.	Whether the whole estate is to be sold.	If only a share is to be sold, specification of such share or shares.	Names of proprietors of property to be sold.	If only a share is to be sold, the sadar jama of such share.	If the whole estate is to be sold, the arrears due from it.	If only a share is to be sold, the arrears due from it.
1	2	3	4	5	6	7	8	9
		Rs. A. P.				Rs. A. P.		Rs. A. P.
43 Separate account No. 8.	Taraf Khadash, pargana Shelbarsha.	2,484 1 8	No ..	Separate account No. 5 of estate No. 43, *i.e.*, 4 annas share of mauzas Chakdulahar and others, police-station Bogra, and Kunchan, police-station Tarsa (Pabna), will be sold. All other shares than that specified will be excluded from the sale.	Sudhir Krishna Bandopadhaya.	621 0 5	..	51 15 9

Bogra, the 4th August 1931. A. B. DE, Collector.

Notification A.

NOTICE is hereby given, under sections 6 and 13, Act XI of 1859, that the undermentioned estate and share of estate in the district of Bogra will be put up for sale at the office of the Collector of that district on the 26th September 1931, at 12 noon, for arrears of revenue and other demands which by law are realizable as arrears of land revenue.

When in columns 5, 7 and 9 of the following statement it is stated that only a share is to be sold, it is to be understood that a separate account is kept for that share :—

Touzi No.	Name of mahal and pargana.	Sadar jama of whole estate.	Whether the whole estate is to be sold.	If only a share is to be sold, specification of such share or shares.	Names of proprietors of property to be sold.	If only a share is to be sold, the sadar jama of such share.	If the whole estate is to be sold, the arrears due from it.	If only a share is to be sold, the arrears due from it.
1	2	3	4	5	6	7	8	9
		Rs. A. P.				Rs. A. P.		Rs. A. P.
91, Separate account No. 13.	Dihi Ulipur, pargana Mehamadshahi.	4,385 5 0 Police— 10 10 8	..	Separate account No. 13 of estate No. 91, *i.e.*— 2 annas 10 gandas share of mauzas Aman and others, police-station Sherpur, Kundals and others, police-station Sherpur, Sariabad, police-station Singra, district Rajshahi, will be sold. All other shares than that specified will be excluded from sale.	Radhika Mohan Munshi and others.	530 9 11	..	42 11 11

Bogra, the 4th August 1931. A. B. DE, Collector.

Notification A.

NOTICE is hereby given, under sections 6 and 13, Act XI of 1859, that the undermentioned estate and shares of estate in the district of Bogra will be put up for sale at the office of the Collector of that district on the 26th September 1931, at 12 noon, for arrears of revenue and other demands which by law are realizable as arrears of land revenue :—

Touzi No.	Name of mahal and pargana.	Sadar jama of whole estate.	Whether the whole estate is to be sold.	If only a share is to be sold, specification of such share or shares.	Names of proprietors of property to be sold.	If only a share is to be sold, the sadar jama of such share.	If the whole estate is to be sold, the arrears due from it.	If only a share is to be sold, the arrears due from it.
1	2	3	4	5	6	7	8	9
		Rs. A. P.					Rs. A. P.	
103	Dihi Damdighi, pargana Mehamanshahi.	512 14 7 Police— 5 5 4	The whole estate will be sold.	....	Atul Chandra Neogi and others.	..	45 11 3	..

Bogra, the 4th August 1931. A. B. DE, Collector.

Notification A.

NOTICE is hereby given, under sections 6 and 13, Act XI of 1859, that the undermentioned estate and shares of estate in the district of Bogra will be put up for sale at the office of the Collector of that district on the 26th September 1931, at 12 noon, for arrears of revenue and other demands which by law are realizable as arrears of land revenue :—

When in columns 5, 7 and 9 of the following statement it is stated that only a share is to be sold, it is to be understood that a separate account is kept for that share :—

Tauzi No.	Name of mahal and pargana.	Sadar jama of whole estate.	Whether the whole estate is to be sold.	If only a share is to be sold, specification of such share or shares.	Names of proprietors of property to be sold.	If only a share is to be sold, the sadar jama of such share.	If the whole estate is to be sold, the arrears due from it.	If only a share is to be sold, the arrears due from it.
1	2	3	4	5	6	7	8	9
		Rs. A. P.				Rs. A. P.		Rs. A. P.
104 Separate Account No. 3.	Dihi Eksingh, pargana Mehamansahi.	4,026 9 10 Police— 37 5 4	No ..	Separate account No. 3 of estate No. 104, i.e.— 2 annas 10 gandas share of mauzas Birkulla, police-station Bogra, Bhadra, police-station Sherpur, Indrasen, police-station Singra, district Rajshahi, will be sold. 5 annas 14 gandas 1 kara 8 tils share of mauzas Darikandi, police-station Bogra, Joanpur and others, police-station Sherpur, Salimpur and others, police-station Singra, will be sold. 3 annas 18 gandas 2 karas 17 tils share of mauzas Barapathar, police-station Bogra, Pashi, police-station Sherpur, will be sold 2 annas 10 gandas share of mauza Sakdaha, police-station Dhunot, will be sold. 2 annas share of mauza Sherpur, police-station Sherpur, will be sold. 2 annas 10 gandas share of mauzas Chatra, Arazi and others, police-station Sherpur, will be sold. All other shares than that specified will be excluded from the sale.	Annapurna Choudhurani.	629 2 6	..	51 15 10

Bogra, the 4th August 1931.

A. B. DE, Collector.

Notification A.

NOTICE is hereby given, under sections 6 and 13, Act XI of 1859, that the undermentioned estate and shares of estate in the district of Bogra will be put up for sale at the office of the Collector of that district on the 26th September 1931, at 12 noon, for arrears of revenue and other demands which by law are realizable as arrears of land revenue :—

Tauzi No.	Name of mahal and pargana.	Sadar jama of whole estate.	Whether the whole estate is to be sold.	If only a share is to be sold, specification of such share or shares.	Names of proprietors of property to be sold.	If only a share is to be sold, the sadar jama of such share.	If the whole estate is to be sold, the arrears due from it.	If only a share is to be sold, the arrears due from it.
1	2	3	4	5	6	7	8	9
		Rs. A. P.				Rs. A. P.		Rs. A. P.
169 Separate Account No. 8.	Kusumsho and others, pargana Khetlal.	2,246 12 4	No	Separate account No. 8 of estate No. 169, i.e., 7 annas 15 gandas share of mauza Kadoa, police-station Jaipurhat, will be sold. All other shares than that specified will be excluded from the sale.	Santosh Kumar Bandopadhaya.	628 9 0	..	51 6 1

Bogra, the 4th August 1931.

A. B. DE, Collector.

Notification A.

NOTICE is hereby given, under sections 6 and 13, Act XI of 1859, that the undermentioned estate and shares of estate in the district of Bogra will be put up for sale at the office of the Collector of that district on the 26th September 1931, at 12 noon, for arrears of revenue and other demands which by law are realizable as arrears of land revenue.

When in columns 5, 7 and 9 of the following statement it is stated that only a share is to be sold, it is to be understood that a separate account is kept for that share :—

Tauzi number.	Name of mahal and pargana	Sadar jama of whole estate.	Whether the whole estate is to be sold.	If only a share is to be sold, specification of such share or shares.	Names of proprietors of property to be sold.	If only a share is be sold, the sadar jama of such share.	If the whole estate is to be sold, the arrears due from it.	If only a share is to be sold, the arrears due from it.
1	2	3	4	5	6	7	8	9
		Rs. A. P.				Rs. A. P.		Rs. A. P.
212 Residuary.	Mahal Raipur, pargana Apoil.	4,242 12 10	No ..	Residuary share of estate No. 212, i.e.— 8 annas share of mauza Dhawa Pikson and others, police-station Bogra, Atahar and others, police-station Shibganj, Basudebpur and others, police-station Panchbibi, Nakurda and others, police station Jaipurhat, Kusumsara and others, police-station Khetlal, Porapara, police station Dupchanchia, Jalalpur and others, police-station Adamdighi, Pirapot, police-station Kahaloo, will be sold. All other shares than that specified will be excluded from the sale.	Jatindra Mohini Dasi and others.	2,058 1 5	..	501 11 9

Bogra, the 4th August 1931.

A. B. DE, Collector.

Notification A.

NOTICE is hereby given, under sections 6 and 13, Act XI of 1859, that the undermentioned estate and shares of estate in the district of Bogra will be put up for sale at the office of the Collector of that district on the 26th September 1931, at 12 noon, for arrears of revenue and other demands which by law are realizable as arrears of land revenue :—

Tauzi No.	Name of mahal and pargana.	Sadar jama of whole estate.	Whether the whole estate is to be sold.	If only a share is to be sold, specification of such share or shares.	Names of proprietors of property to be sold.	If only a share is to be sold, the sadar jama of such share.	If the whole estate is to be sold, the arrears due from it.	If only a share is to be sold, the arrears due from it.
1	2	3	4	5	6	7	8	9
		Rs. A. P.					Rs. A. P.	
688	Nandura and others, pargana Apoil.	676 9 3	The whole estate will be sold.	....	Gobinda Madhab Deb and others.	..	46 9 3	..

Bogra, the 4th August 1931.

A. B. DE, Collector.

Notification A.

NOTICE is hereby given, under sections 6 and 13, Act XI of 1859, that the undermentioned estate and shares of estate in the district of Bogra will be put up for sale at the office of the Collector of that district on the 26th September 1931, at 12 noon, for arrears of revenue and other demands which by law are realizable as arrears of land revenue :—

Tauzi No.	Name of mahal and pargana.	Sadar jama of whole estate.	Whether the whole estate is to be sold.	If only a share is to be sold, specification of such share or shares.	Names of proprietors of property to be sold.	If only a share is to be sold, the sadar jama of such share.	If the whole estate is to be sold, the arrears due from it.	If only a share is to be sold, the arrears due from it.
1	2	3	4	5	6	7	8	9
826 Diara	Berapanchheria, pargana Protapbajoo.	Rs. A. P. 650 0 0	The whole estate will be sold.	....	Raja Promoda Nath Roy.	..	Rs. A. P. 349 14 0	..

Bogra, the 4th August 1931.

A. B. DE, Collector.

Notification A.

NOTICE is hereby given, under sections 6 and 13, Act XI of 1859, that the undermentioned estate and shares of estate in the district of Bogra will be put up for sale at the office of the Collector of that district on the 26th September 1931, at 12 noon, for arrears of revenue and other demands which by law are realizable as arrears of land revenue :—

Tauzi No.	Name of mahal and pargana.	Sadar jama of whole estate.	Whether the whole estate is to be sold.	If only a share is to be sold, specification of such share or shares.	Names of proprietors of property to be sold.	If only a share is to be sold, the sadar jama of such share.	If the whole estate is to be sold, the arrears due from it.	If only a share is to be sold, the arrears due from it.
1	2	3	4	5	6	7	8	9
882 Diara	Diara mahal Protiva Nath Roy and others, pargana Tappa Chapila.	Rs. A. P. 1,006 0 0	The whole estate will be sold.	....	Kumar Protiva Nath Roy and others.	..	Rs. A. P. 502 0 0	..

Bogra, the 4th August 1931.

A. B. DE, Collector.

Notification A.

NOTICE is hereby given, under sections 6 and 13, Act XI of 1859, that the undermentioned estate and shares of estat in the district of Bogra will be put up for sale at the office of the Collector of that district on the 26th September 193 at 12 noon, for arrears of revenue and other demands which by law are realizable as arrears of land revenue :—

Tauzi No.	Name of mahal and pargana.	Sadar jama of whole estate.	Whether the whole estate is to be sold.	If only a share is to be sold, specification of such share or shares.	Names of proprietors of property to be sold.	If only a share is to be sold, the sadar jama of such share.	If the whole estate is to be sold, the arrears due from it.	If only a share is to be sold, the arrears due from it
1	2	3	4	5	6	7	8	9
884 Diara	Diara mahal Protiva Nath Roy and others, pargana Tappa Chapila.	Rs. A. P. 2,674 0 0	The whole estate will be sold.	....	Kumar Protiva Nath Roy.	..	Rs. A. P. 1,002 0 0	..

Bogra, the 4th August 1931.

A. B. DE, Collector.

Notification A.

NOTICE is hereby given, under sections 6 and 13, Act XI of 1859, that the undermentioned estate and shares of estate in the district of Bogra will be put up for sale at the office of the Collector of that district on the 26th September 1931, at 12 noon, for arrears of revenue and other demands which by law are realizable as arrears of land revenue :—

Tauzi No.	Name of mahal and pargana.	Sadar jama of whole estate.	Whether the whole estate is to be sold.	If only a share is to be sold, specification of such share or shares.	Names of proprietors of property to be sold.	If only a share is to be sold, the sadar jama of such share.	If the whole estate is to be sold, the arrears due from it.	If only a share is to be sold, the arrears due from it.
1	2	3	4	5	6	7	8	9
		Rs. A. P.				Rs. A. P.		Rs. A. P.
212 Separate Account No. 1.	Mahal Raipur, pargana Apoil.	4,242 12 10	No ..	Separate account No. 1 of estate No. 212, *i.e.*, 6 annas share of mauzas Dhawa Pikson and others, p.-s. Bogra, Atahar and others, p.-s. Shibganj, Basudebpur and others, p.-s. Panchbibi, Nakurda and others, p.-s. Jaipurhat, Kusumsara and others, p.-s. Khetlal, Pirapot, p.-s. Kahaloo, Porapara, p.-s. Dupchanchia, Jalalpur and others, p.-s. Adamdighi, will be sold. All other shares than that specified will be excluded from the sale.	Bhudeb Mukhopadhay.	1,591 1 4	..	53 1 4

Bogra, the 4th August 1931. A. B. DE, Collector.

Notification A.

NOTICE is hereby given, under sections 6 and 13, Act XI of 1859, that the undermentioned estate and shares of estate in the district of Bogra will be put up for sale at the office of the Collector of that district on the 26th September 1931, at 12 noon, for arrears of revenue and other demands which by law are realizable as arrears of land revenue :—

Tauzi No.	Name of mahal and pargana.	Sadar jama of whole estate.	Whether the whole estate is to be sold.	If only a share is to be sold, specification of such share or shares.	Names of proprietors of property to be sold.	If only a share is to be sold, the sadar jama of such share.	If the whole estate is to be sold, the arrears due from it.	If only a share is to be sold, the arrears due from it.
1	2	3	4	5	6	7	8	9
		Rs. A. P.					Rs. A. P.	
777	Kalimoni, pargana Protapbajoo.	807 4 6 Police— 61 1 0	The whole estate will be sold.	....	Debendra Kishore Tarafdar and others.	..	47 6 8 Police— 10 1 2	..

Bogra, the 4th August 1931. A. B. DE, Collector.

Notification A.

NOTICE is hereby given, under sections 6 and 13, Act XI of 1859, that the undermentioned estates and shares of estates in the district of Mymensingh will be put up for sale at the office of the Collector of that district on 25th September 1931, at 12 noon, for arrears of revenue and other demands which by law are realizable as arrears of land revenue :—

Tauzi No.	Name of mahal and pargana.	Sadar jama of whole estate.	Whether the whole estate is to be sold.	If only a share is to be sold, specification of such share or shares.	Names of proprietors of property to be sold.	If only a share is to be sold, the sadar jama of such share.	If the whole estate is to be sold, the arrears due from it.	If only a share is to be sold, the arrears due from it.
1	2	3	4	5	6	7	8	9
		Rs. A. P.					Rs. A. P.	
96	Zemindary, pargana Nasirujlal.	7,197 1 6	Yes ..	....	Girish Chandra Pal Chowdhury, Promode Ch. Roy Chowdhuri and others.	....	3,108 5 1	....
5253-Jt.	Zemindary, pargana Mymensingh.	10,137 3 0	No ..	Joint share ..	Jnanendra Nath Sanyal, trustee to the estate of Ramini Kanta Lahiry and others.	....	....	751 3 9

Mymensingh, the 7th August 1931. [ILLEGIBLE], *for* Collector.

In the High Court of Judicature at Fort William in Bengal, in Insolvency.

NOTICE OF ADJUDICATION ORDER.

No. 167 of 1931.

Re Ramlal Dikshita, residing at No. 14, Upper Chitpur Road in the town of Calcutta, a clerk in the employ of Messrs. Surajmull Baijnath of No. 22, Burtolla Street in Calcutta aforesaid. *Ex parte* the creditor.

S. C. Roy Chowdhury, creditor's solicitor.

ON the 6th day of July 1931, an order was made by the High Court of Judicature at Fort William in Bengal in its insolvency jurisdiction adjudging the abovenamed as an insolvent.

NOTE.—All debts due to the estate should be paid to me.

Dated this 5th day of August 1931.

G. M. FALKNER, Official Assignee.

In the High Court of Judicature at Fort William in Bengal, in Insolvency.

NOTICE OF ADJUDICATION ORDER.

No. 171 of 1931.

Re Rughlal and Ganeshmull, both residing at No. 11, Armenian Street in the town of Calcutta, both lately carrying on business in co-partnership in piece-goods by the name, style and firm of Rughlal Ganeshmull at the said No. 11, Armenian Street in Calcutta aforesaid, at present of no occupation. *Ex parte* the creditor.

Gadadhar Bagaria, creditor's solicitor.

ON the 14th day of July 1931, an order was made by the High Court of Judicature at Fort William in Bengal in its insolvency jurisdiction adjudging the abovenamed as insolvents.

NOTE.—All debts due to the estate should be paid to me.

Dated this 5th day of August 1931.

G. M. FALKNER, Official Assignee.

In the High Court of Judicature at Fort William in Bengal, in Insolvency.

NOTICE OF ADJUDICATION ORDER.

No. 180 of 1931.

Re Hoopder Sing, residing at No. 22, Canning Street, in the town of Calcutta, formerly carrying on business in co-partnership with Paritosh Guha, as flour merchant under the name, style and firm of Thandi Flour Mill at No. 7A, Clive Row in Calcutta aforesaid, but at present employed as a durwan in the Chartered Bank, *ex parte* the debtor.

S. Hyder, debtor's solicitor.

ON the 27th day of July 1931, an order was made by the High Court of Judicature at Fort William in Bengal in its insolvency jurisdiction adjudging the abovenamed as an insolvent.

NOTE.—All debts due to the estate should be paid to me.

Dated this 4th day of August 1931.

G. M. FALKNER, Official Assignee.

In the High Court of Judicature at Fort William in Bengal, in Insolvency.

NOTICE OF ADJUDICATION ORDER.

No. 181 of 1931.

Re Elias Hyam Saleh Moses, residing at No. 7/1, Grant's Lane in the town of Calcutta, of no occupation, *ex parte* the debtor.

C. C. Ghosh, debtor's solicitor.

ON the 29th day of July 1931, an order was made by the High Court of Judicature at Fort William in Bengal in its insolvency jurisdiction adjudging the abovenamed as an insolvent.

NOTE.—All debts due to the estate should be paid to me.

Dated this 5th day of August 1931.

G. M. FALKNER, Official Assignee.

In the High Court of Judicature at Fort William in Bengal, in Insolvency.

NOTICE OF ADJUDICATION ORDER.

No. 183 of 1931.

Re Albert Sulton Green, residing at Seamen's Mission, Kidderpore, and lately employed by the Calcutta Tramway Company, Limited, of No. 6, Church Lane, Calcutta, at present of no occupation, *ex parte* the debtor in person.

ON the 30th day of July 1931, an order was made by the High Court of Judicature at Fort William in Bengal in its insolvency jurisdiction adjudging the abovenamed as an insolvent.

NOTE.—All debts due to the estate should be paid to me.

Dated this 4th day of August 1931.

G. M. FALKNER, Official Assignee.

In the High Court of Judicature at Fort William in Bengal, in Insolvency.

NOTICE OF ADJUDICATION ORDER.

No. 184 of 1931.

Re Patrick Ashton Vallis, residing at 33/9, Corporation Street in the town of Calcutta, and employed at the Bengal Telephone Corporation, Limited, at the Burra Bazar Exchange, *ex parte* the debtor.

Clarke Rawlins Ker & Co., debtor's solicitors.

ON the 31st day of July 1931, an order was made by the High Court of Judicature at Fort William in Bengal in its insolvency jurisdiction adjudging the abovenamed as an insolvent.

NOTE.—All debts due to the estate should be paid to me.

Dated this 5th day of August 1931.

G. M. FALKNER, Official Assignee.

In the High Court of Judicature at Fort William in Bengal, in Insolvency.

NOTICE OF ADJUDICATION ORDER.

No. 185 of 1931.

Re Bejoy Kristo Pramanik and Dulal Chandra Pramanik, both residing at No. 35, Kristo Das Pal Lane, in the town of Calcutta, and lately carrying on business in co-partnership in brass utensils under the name, style and firm of Raj Kumar Pramanik Narayan Chandra Pramanik at No. 15, Chorebagan Lane, in Calcutta aforesaid, and also at No. 43-7, Strand Road, in Calcutta aforesaid, under the name, style and firm of Raj Kumar Pramanik Bejoy Kristo Pramanik, but at present of no occupation, *ex parte* the debtors.

N. K. Mitra, debtors' solicitor.

ON the 1st day of August 1931, an order was made by the High Court of Judicature at Fort William in Bengal in its insolvency jurisdiction adjudging the abovenamed as insolvents.

NOTE.—All debts due to the estate should be paid to me.

Dated this 7th day of August 1931.

G. M. FALKNER, Official Assignee.

In the High Court of Judicature at Fort William in Bengal, in Insolvency.

NOTICE OF ADJUDICATION ORDER.

No. 187 of 1931.

Re Arthur Dingwall Fordyce Harvey, residing at No. 4, Lansdowne Road, in the suburbs of the town of Calcutta, a jute assistant of Landale & Morgan at 3, Fairlie Place, Calcutta, *ex parte* the debtor in person.

ON the 4th day of August 1931, an order was made by the High Court of Judicature at Fort William in Bengal in its insolvency jurisdiction adjudging the abovenamed as an insolvent.

NOTE.—All debts due to the estate should be paid to me.

Dated this 7th day of August 1931.

G. M. FALKNER, Official Assignee.

In the High Court of Judicature at Fort William in Bengal, in insolvency.

No. 133 of 1931.

Re Estate Panoyolia Maurice.

NOTICE is hereby given that a dividend is intended to be declared in the above estate by the 24th September next.

Persons claiming to be creditors of the above estate are hereby required to lodge their claim duly supported by affidavit and necessary vouchers by the 15th instant after which date no claims received by this office will be considered.

Persons who have already lodged their claims need not file any fresh claim.

A form of proof of debt may be had on application.

G. M. FALKNER, Official Assignee.

10, Old Post Office Street, Calcutta, the 1st August 1931.

(1636—1)

In the High Court of Judicature at Fort William in Bengal, in insolvency.

No. 216 of 1924.

Re Estate Hajee Karim Habib Dhorajiwalla.

NOTICE is hereby given that a 2nd dividend is intended to be declared in the above estate by the 31st instant.

Persons claiming to be creditors of the above estate are hereby required to submit their claims in this office duly supported by affidavit and necessary vouchers by the 15th instant after which date no claims received by me will be considered.

Persons who have already lodged their claims need not file any fresh claim.

A form of proof of debt may be had on application.

G. M. FALKNER, Official Assignee.

10, Old Post Office Street, Calcutta, 1st August 1931.

(1637—1)

In the High Court of Judicature at Fort William in Bengal, in insolvency.

No. 160 of 1924.

Re Estate Juggannath Daga.

No. 231 of 1924.

Re Estate H. J. Robinson.

NOTICE is hereby given that dividends are intended to be declared in the above estates by the 25th November next.

Persons claiming to be creditors of the above estates must submit their claims with the undersigned, duly supported by affidavits and necessary vouchers, by the 31st instant, after which date no claims received by this office will be considered.

Persons who have already filed their claims need not file any fresh claims.

A form of proof of debt may be had on application.

G. M. FALKNER, Official Assignee.

10, Old Post Office Street, Calcutta, the 5th August 1931.

(1647—1)

In the Court of the Additional District Judge of Bogra.

INSOLVENCY CASE No. 5 of 1931.

WHEREAS Giridhari Lal Agorwala, Mohadeb Lal Agorwala, Satya Narayan Agorwala and Parbati Agorwalni of Akkelpur, police-station Adamdighi, district Bogra, have applied to this Court by a petition, dated 20th June 1931, to be declared insolvents, this is to give notice to all their creditors that the Court has fixed 27th August 1931 for hearing of the aforesaid petition and for examination of the debtors.

L. M. BASU, Additional District Judge.

Bogra, the 5th August 1931. (1646—1)

In the Court of the District Judge of Dinajpur.

INSOLVENCY CASE No. 50 of 1931.

RAFIUDDIN SARKER, son of late Kahar Ali Sarker, resident of Sahapur, police-station Rajganj, district Dinajpur, has applied to this Court for being adjudged insolvent. The Court has fixed the 24th day of August 1931 for examination of the petitioner at Dinajpur.

H. G. WAIGHT, District Judge.

Dinajpur, the 4th August 1931. (1645—1)

In the Court of the District Judge of Hooghly.

NOTICE is hereby given, under clause (3) of section 12 of the Provincial Insolvency Act, V of 1920, to his creditors that the discharge petition of Jhun Mun, son of late Alam Mea, of Telinipara, thana Bhadreswar, district Hooghly, has been filed in this Court in insolvency No. 86 of 1929 and that the 22nd August 1931 has been fixed for the hearing thereof.

S. SEN, District Judge.

Chinsura, the 23rd July 1931. (1635—1—1634)

In the Court of the District Judge of Jessore.

Clause 2 of section 19 of the Provincial Insolvency Act, V of 1920.

INSOLVENCY CASE No. 14 of 1931.

NOTICE is hereby given to the creditors that the insolvency petition filed by the debtor Rash Behari Sarkar, son of late Shyama Charan Sarkar of Kultia, police-station Pangsha, district Faridpur, present residence Bhaturia, police-station Harinakundu, district Jessore, has been admitted and that the 26th day of August has been fixed for hearing thereof.

P. C. DE, District Judge.

Jessore, the 4th August 1931. (1641—1)

In the Court of the District Judge of Jessore.

Clause 2 of section 19 of the Provincial Insolvency Act, V of 1920.

INSOLVENCY CASE No. 17 of 1931.

NOTICE is hereby given to the creditors that the insolvency petition filed by the debtor Mandar Baksha Sheik, son of late Gangu Sheik of Puratan Kasbha, police-station Kotowali, district Jessore, has been admitted and that the 5th day of September 1931 has been fixed for hearing thereof.

P. C. DE, District Judge.

Jessore, the 4th August 1931. (1642—1)

In the Court of the District Judge of Mymensingh.

INSOLVENCY CASE No. 45 of 1930.

ON the application of the insolvent Basanta Kumar Pal, son of late Kalachand Pal, of Suti, police-station Gopalpur, district Mymensingh, for an order of the final discharge, 29th day of August 1931 has been fixed for hearing the aforesaid petition and the examination of the insolvent.

R. F. LODGE, District Judge.

Mymensingh, the 1st August 1931. (1633—1)

In the Court of the District Judge of Rangpur.

INSOLVENCY CASE No. 16 of 1931.

ON the application of the debtor Kasimullah Sarkar, son of late Samiruddin Sarkar, of Mandrail, police-station Gangachara in Rangpur, for being adjudged an insolvent, the 29th day of August 1931 has been fixed for hearing the aforesaid petition and the examination of the debtor.

A. M. AHMAD, District Judge.

Rangpur, the 1st August 1931. (1638—1)

In the Court of the District Judge of Rajshahi.

INSOLVENCY CASE No. 36 of 1931.

NOTICE is hereby given that Jogeswar Shaha of Sonapatil, police-station Nator, district Rajshahi, ha applied under Act V of 1920 to be adjudicated an insolvent and that 26th August 1931 is fixed for hearing of the application.

G. G. HOOPER, District Judge.

Rajshahi, the 22nd July 1931. (1639—1—1632)

In the Court of the District Judge of Rajshahi.

INSOLVENCY CASE No. 39 OF 1931.

NOTICE is hereby given that Kalikadas Chattoraj of Chapai, police-station Nawabganja, district Malda, has applied under Act V of 1920 to be adjudicated an insolvent and that 29th August 1931 is fixed for hearing of the application.

G. G. HOOPER, District Judge.

Rajshahi, the 30th July 1931. (1640—1—1633)

In the Court of the District Judge of 24-Parganas.

INSOLVENCY CASE No. 38 OF 1931.

Radhashyam Mukherjee, of 2, Rani Sankari Lane, Bhowanipore, 24 Parganas, applicant.

To Kali Krishna Rakshit, of Baghtikra, post-office Damhat, Burdwan, and others, creditors

ON the 10th day of July 1931, it was ordered that the matter of the petition of the applicant be heard on the 17th day of August 1931 and that the said applicant do attend to be examined by this Court on that date.

R. R. GARLICK, District Judge.

Alipore, the 13th July 1931. (1490—1—1616)

ORDER OF ADJUDICATION.

Section 27 of the Provincial Insolvency Act, V of 1920.

In the Court of the District Judge at Alipore.

INSOLVENCY APPLICATION No. 22 OF 1931.

PURSUANT to a petition, dated 20th April 1931, filed by (1) Bhairab Shah, (2) Raghunath Shah, (3) Ram nath Shah, (4) Badrinarayan Shah, of 60, Barrackpore Trunk Road, Chitpore, 24 Parganas, debtors, and on the application of the debtors themselves and on reading their application and hearing their pleader, it is ordered that the debtors be and the said debtors as partners and as individuals are hereby adjudged insolvents

It is further ordered that the debtors do apply for their discharge in a year from this date.

Dated this 3rd day of July 1931.

R. R. GARLICK, District Judge.

(1491—1—1617)

In the Court of the District Judge of 24-Parganas.

INSOLVENCY CASE No. 37 OF 1931.

R. C. Elliott, Berthing Master, Kidderpore, 24-Parganas, applicant.

To Mohadeo Lall and Brothers of 1, Tikiapara Lane, Howrah, creditors.

ON the 10th day of July 1931 it was ordered that the matter of the petition of the applicant be heard on the 17th day of August 1931 and that the said applicant do attend to be examined by this Court on that date.

R. R. GARLICK, District Judge.

Alipore, the 15th July 1931. (1503—1—1615)

ORDER OF ADJUDICATION.

Section 27 of the Provincial Insolvency Act, V of 1920.

In the Court of the District Judge at Alipore.

INSOLVENCY APPLICATION No. 68 OF 1930.

PURSUANT to a petition, dated 7th November 1930, filed by Satish Chandra Bose of 14B, Mohanlal Street, Shambazar, 24-Parganas, debtor, and on the application of the debtor himself and on reading his application and hearing his pleader, it is ordered that the debtor be and the said debtor is hereby adjudged insolvent.

It is further ordered that the debtor do apply for his discharge in a year from this date.

Dated this 20th day of June 1931.

R. R. GARLICK, District Judge.

(1546—1—1613)

In the Court of the District Judge of 24-Parganas.

INSOLVENCY CASE No. 35 OF 1931.

Shaik Makham Mollah of 61, Bandel Road, Ballygunge, 24-Parganas, applicant.

To Dost Mohammad Abdul Rashid of 66, Colootola Street, Calcutta, and others, creditors.

ON the 18th day of July 1931, it was ordered that the matter of the petition of the applicant be heard on the 24th day of August 1931 and that the said applicant do attend to be examined by this Court on that date.

R. R GARLICK, District Judge.

Alipore, the 22nd July 1931. (1560—1—1614)

ORDER OF ADJUDICATION.

Section 27 of the Provincial Insolvency Act, V of 1920.

In the Court of the District Judge at Alipore.

INSOLVENCY APPLICATION No. 34 OF 1931.

PURSUANT to a petition, dated 1st June 1931, filed by Abdul Aziz of Kankinarah, police-station Jagatdal, 24-Parganas, debtor, and on the application of the debtor himself and on reading his application and hearing his pleader, it is ordered that the debtor be and the said debtor is hereby adjudged insolvent.

It is further ordered that the debtor do apply for his discharge in six months from this date

Dated this 13th day of July 1931.

S. K. GANGALI, District Judge.

(1594—1—1689)

NOTICE TO CREDITORS OF APPLICATION FOR DISCHARGE

Section 41(*1*) of the Provincial Insolvency Act, V of 1920.

In the 4th Court of the Sub-Judge at Alipore.

INSOLVENCY CASE No. 350 OF 1930.

Surendramohan Aich of 111, Kalitara Bose Lane, Beliaghata, 24 Parganas, applicant

TAKE notice that the abovenamed insolvent has applied at the Court for his discharge, and that the Court has fixed the 24th day of August 1931 at 11 o'clock for hearing the application.

Dated this 15th day of July 1931.

S. N. ROY, Sub-Judge.

(1523—1—1624)

NOTICE TO CREDITORS OF APPLICATION FOR DISCHARGE.

Section 41(*1*) of the Provincial Insolvency Act, V of 1920.

In the 4th Court of the Sub-Judge at Alipore.

INSOLVENCY CASE No 355 OF 1930.

Bhartu Show Teli, 38 63, Maniktola Main Road, police-station Maniktola, district 24-Parganas, applicant.

TAKE notice that the abovenamed insolvent has applied at the Court for his discharge, and that the Court has fixed the 17th day of August 1931 at 11 o'clock for hearing the application.

Dated this 10th day of July 1931.

S. N. ROY, Sub-Judge.

(1524—1—1625)

ORDER OF ADJUDICATION.

Section 27 of the Provincial Insolvency Act, V of 1920.

In the 4th Court of the Sub-Judge at Alipore.

INSOLVENCY APPLICATION No. 41 OF 1931

PURSUANT to a petition, dated 21st January 1931, filed by Kashmudd. Sardar of Baja Raipore, police-station Tollygunge, 24-Parganas, debtor, and on the application of the debtor himself and on reading his application and hearing his pleader, it is ordered that the debtor be and the said debtor is hereby adjudged insolvent.

It is further ordered that the debtor do apply for his discharge within six months from this date

Dated this 14th day of July 1931.

S. N. ROY, Sub-Judge.

(1525—1—1626)

ORDER OF ADJUDICATION.

Section 27 of the Provincial Insolvency Act, V of 1920.

In the 4th Court of the Sub-Judge at Alipore.

INSOLVENCY APPLICATION No. 51 OF 1931.

PURSUANT to a petition, dated 31st January 1931, filed by Gopi Nath Das of Kotaldanga, police-station Falta, 24-Parganas, debtor, and on the application of the debtor himself and on reading his application and hearing his pleader, it is ordered that the debtor be and the said debtor is hereby adjudged insolvent.

It is further ordered that the debtor do apply for his discharge within six months from this date.

Dated this 14th day of July 1931.

S. N. ROY, Sub-Judge.
(1526—1—1627)

ORDER OF ADJUDICATION.

Section 27 of the Provincial Insolvency Act, V of 1920.

In the 4th Court of the Sub-Judge at Alipore.

INSOLVENCY APPLICATION No. 122 OF 1931.

PURSUANT to a petition, dated 26th March 1931, filed by Ram Charan Das Kurmi of Bijpore, Kalitola Old Block, Kanchrapara, 24-Parganas, debtor, and on the application of the debtor himself and on reading his application and hearing his pleader, it is ordered that the debtor be and the said debtor is hereby adjudged insolvent.

It is further ordered that the debtor do apply for his discharge within six months from this date.

Dated this 14th day of July 1931.

S. N. ROY, Sub-Judge.
(1527—1—1628)

ORDER OF ADJUDICATION.

Section 27 of the Provincial Insolvency Act, V of 1920.

In the 4th Court of the Sub-Judge at Alipore.

INSOLVENCY APPLICATION No. 149 OF 1931.

PURSUANT to a petition, dated 11th April 1931, filed by Noor Mohammad Shaikh Maulvi of Khardaha, police-station Khardaha, 24-Parganas, debtor, and on the application of the debtor himself and on reading his application and hearing his pleader, it is ordered that the debtor be and the said debtor is hereby adjudged insolvent.

It is further ordered that the debtor do apply for his discharge within six months from this date.

Dated this 14th day of July 1931.

S. N. ROY, Sub-Judge.
(1528—1—1629)

ORDER OF ADJUDICATION.

Section 27 of the Provincial Insolvency Act, V of 1920.

In the 4th Court of the Sub-Judge at Alipore.

INSOLVENCY APPLICATION No. 169 OF 1931.

PURSUANT to a petition, dated 30th April 1931, filed by Bechu Gopal Nath of 58, Sitala Tola Lane, police-station Beliaghata, 24-Parganas, debtor, and on the application of the debtor himself and on reading his application and hearing his pleader, it is ordered that the debtor be and the said debtor is hereby adjudged insolvent.

It is further ordered that the debtor do apply for his discharge within six months from this date.

Dated this 14th day of July 1931.

S. N. ROY, Sub-Judge.
(1529—1—1630)

ORDER OF ADJUDICATION.

Section 27 of the Provincial Insolvency Act, V of 1920.

In the 4th Court of the Sub-Judge at Alipore.

INSOLVENCY APPLICATION No. 186 OF 1931.

PURSUANT to a petition, dated 5th May 1931, filed by Hari Charan Nath of Baruipore, police-station Baruipore, district 24-Parganas, debtor, and on the application of the debtor himself and on reading his application and hearing his pleader, it is ordered that the debtor be and the said debtor is hereby adjudged insolvent.

It is further ordered that the debtor do apply for his discharge within six months from this date.

Dated this 14th day of July 1931.

S. N. ROY, Sub-Judge.
(1530—1—1631)

In the 4th Court of the Sub-Judge of 24-Parganas

INSOLVENCY CASE No. 274 OF 1931.

Keramat Ali of 7, Ekbalpore Road, 24-Parganas, applicant.

To Abdul Kader of 39, Market Street, Calcutta, and others, creditors.

ON the 14th day of July 1931 it was ordered that the matter of the petition of the applicant be heard on the 24th day of August 1931 and that the said applicant do attend to be examined by this Court on that date.

S. N. ROY, Sub-Judge.
Alipore, the 10th July 1931. (1552—1—1618)

In the 4th Court of the Sub-Judge of 24-Parganas.

INSOLVENCY CASE No. 276 OF 1931.

Jotish Chandra Banerjee of 40B, Pottery Road, South, Entally, 24-Parganas, applicant.

To Pandit Munsilal of Boruna Bridge, Benares Cantonment, and others, creditors.

ON the 15th day of July 1931, it was ordered that the matter of the petition of the applicant be heard on the 24th day of August 1931 and that the said applicant do attend to be examined by this Court on that date.

S. N. ROY, Sub-Judge.
Alipore, the 16th July 1931. (1553—1—1619)

In the 4th Court of the Sub-Judge of 24-Parganas.

INSOLVENCY CASE No. 277 OF 1931.

R. J. Coutts of 37-1D, Mominpore Road, Kidderpore, Ekbalpore, 24-Parganas, applicant.

To S. Samuel, clerk, B. I. S. N. Co.'s office, 8, Strand Road, Calcutta, and others, creditors.

ON the 15th day of July 1931 it was ordered that the matter of the petition of the applicant be heard on the 24th day of August 1931 and that the said applicant do attend to be examined by this Court on that date.

S. N. ROY, Sub-Judge.
Alipore, the 16th July 1931. (1554—1—1620)

In the 4th Court of the Sub-Judge of 24-Parganas.

INSOLVENCY CASE No. 278 OF 1931.

Omar Ali Molla of Baduria, 24-Parganas, applicant.

To Babu Ram Rameswar Das of 46, Sutapatti Lane, Calcutta, and others, creditors.

ON the 15th day of July 1931 it was ordered that the matter of the petition of the applicant be heard on the 24th day of August 1931 and that the said applicant do attend to be examined by this Court on that date.

S. N. ROY, Sub-Judge.
Alipore, the 16th July 1931. (1555—1—1621)

In the 4th Court of the Sub-Judge of 24-Parganas.

INSOLVENCY CASE No. 282 OF 1931.

Ram Kissen Kurmi of Bijpore, 24-Parganas, applicant.

To Francis Gon Salvis of 337, Loco. Workshop, Kanchrapara, and others, creditors.

ON the 16th day of July 1931, it was ordered that the matter of the petition of the applicant be heard on the 24th day of August 1931 and that the said applicant do attend to be examined by this Court on that date.

S. N. ROY, Sub-Judge.
Alipore, the 20th July 1931. (1556—1—1622)

In the 4th Court of the Sub-Judge of 24-Parganas.

INSOLVENCY CASE No. 286 OF 1931.

Jamiruddin Ostagar of Dhopapara, Metiaburus, 24-Parganas, applicant.

To Narsing Agarwala of Kidderpore, Calcutta, and others, creditors.

ON the 18th day of July 1931 it was ordered that the matter of the petition of the applicant be heard on the 31st day of August 1931 and that the said applicant do attend to be examined by this Court on that date.

S. N. ROY, Sub-Judge.

Alipore, the 20th July 1931. (1557—1—1623)

In the 4th Court of the Sub-Judge of 24-Parganas.

INSOLVENCY CASE No. 216 OF 1931.

Raghu Mistry of 27, Police Hospital Road, 24-Parganas, applicant.

To Mr. S. K. Bose, Bar.-at-Law, High Court, Calcutta, and another, creditors.

ON the 23rd day of July 1931, it was ordered that the matter of the petition of the applicant be heard on the 31st day of August 1931 and that the said applicant do attend to be examined by this Court on that date.

S. N. ROY, Sub-Judge.

Alipore, the 24th July 1931. (1601—1—1690)

In the 4th Court of the Sub-Judge of 24-Parganas.

INSOLVENCY CASE No. 222 OF 1931.

Ramdhone Prasad Pande of 3-A, Russa Road, South, Bhowanipore, 24-Parganas, applicant.

To Musammat Sabitri of 401/7-A, Chitpore Road, Calcutta, and others, creditors.

ON the 20th day of July 1931, it was ordered that the matter of the petition of the applicant be heard on the 24th day of August 1931 and that the said applicant do attend to be examined by this Court on that date.

S. N. ROY, Sub-Judge.

Alipore, the 22nd July 1931. (1602—1—1691)

In the 4th Court of the Sub-Judge of 24-Parganas.

INSOLVENCY CASE No. 224 OF 1931.

Shaik Panchoo of 1, Bahir Surah Road, Ram Sita Bagan, Beliaghata, 24-Parganas, applicant.

To Tansuk Rai Rajgharia of 10-2, Syed Sally Lane, Calcutta, and others, creditors.

ON the 20th day of July 1931, it was ordered that the matter of the petition of the applicant be heard on the 24th day of August 1931 and that the said applicant do attend to be examined by this Court on that date.

S. N. ROY, Sub-Judge.

Alipore, the 22nd July 1931. (1603—1—1692)

In the 4th Court of the Sub-Judge of 24-Parganas.

INSOLVENCY CASE No. 261 OF 1931.

Rampirit Barui of Nichoo Basha, Bijpore, police-station Bijpore, 24-Parganas, applicant.

To Nirmal Tewari of Nichoo Basha, Bijpore, police-station Bijpore, 24-Parganas, and others, creditors.

ON the 23rd day of July 1931, it was ordered that the matter of the petition of the applicant be heard on the 31st day of August 1931 and that the said applicant do attend to be examined by this Court on that date.

S. N. ROY, Sub-Judge.

Alipore, the 24th July 1931. (1604—1—1693)

In the 4th Court of the Sub-Judge of 24-Parganas.

INSOLVENCY CASE No. 269 OF 1931.

Babu Lall Shaha of Khidderpore, Uriapara, 24-Parganas, applicant.

To Ramdeo Lachminarayan, 17, Suttapatti, Barabazar, Calcutta, and others, creditors.

ON the 23rd day of July 1931, it was ordered that the matter of the petition of the applicant be heard on the 31st day of August 1931 and that the said applicant do attend to be examined by this Court on that date.

S. N. ROY, Sub-Judge.

Alipore, the 24th July 1931. (1605—1—1694)

In the 4th Court of the Sub-Judge of 24-Parganas.

INSOLVENCY CASE No. 275 OF 1931.

Iarayail Mondle of Chandannagor, police-station Mohestala, 24-Parganas, applicant.

To Karamull Amar Chand of 69, Clive Street, Calcutta, creditor.

ON the 23rd day of July 1931, it was ordered that the matter of the petition of the applicant be heard on the 31st day of August 1931 and that the said applicant do attend to be examined by this Court on that date.

S. N. ROY, Sub-Judge.

Alipore, the 27th July 1931. (1606—1—1695)

In the 4th Court of the Sub-Judge of 24-Parganas.

INSOLVENCY CASE No. 279 OF 1931.

Khirode Mohan Sen Gupta, 1-B, Govinda Roy Lane, Kalighat, applicant.

To Jagannath Addy, 98-4, Clive Street, Calcutta, and others, creditors.

ON the 22nd day of July 1931, it was ordered that the matter of the petition of the applicant be heard on the 31st day of August 1931 and that the said applicant do attend to be examined by this Court on that date.

S. N. ROY, Sub-Judge.

Alipore, the 23rd July 1931. (1607—1—1696)

In the 4th Court of the Sub-Judge of 24-Parganas.

INSOLVENCY CASE No. 281 OF 1931.

Amrita Lall Manna, 26-2, Ram Kamal Street, Kidderpore, applicant.

To Krishnapada Samanta, 4, Paddapukur South Lane, Kidderpore, and others, creditors.

ON the 22nd day of July 1931, it was ordered that the matter of the petition of the applicant be heard on the 31st day of August 1931 and that the said applicant do attend to be examined by this Court on that date.

S. N. ROY, Sub-Judge.

Alipore, the 23rd July 1931. (1608—1—1697)

In the 4th Court of the Sub-Judge of 24-Parganas.

INSOLVENCY CASE No. 283 OF 1931.

Sham Lall Muchi of 92-2 Beliaghata Main Road, 24-Parganas, applicant.

To Akbar Khan Aga of Beliaghata Main Road, Mia-bazar, 24-Parganas, and others, creditors.

ON the 23rd day of July 1931, it was ordered that the matter of the petition of the applicant be heard on the 31st day of August 1931 and that the said applicant do attend to be examined by this Court on that date.

S. N. ROY, Sub-Judge.

Alipore, the 23rd July 1931. (1609—1—1698)

In the 4th Court of the Sub-Judge of 24-Parganas.

INSOLVENCY CASE No. 285 OF 1931.

Agore Nath Chitrakar of 39, Harie Chatterjee Street, Kalighat, applicant.

To Jarip Khan Kabuli and Haydar Khan Kabuli of 24, Ramesh Mittra Road, Bhowanipore, and others, creditors.

ON the 18th day of July 1931, it was ordered that the matter of the petition of the applicant be heard on the 31st day of August 1931 and that the said applicant do attend to be examined by this Court on that date.

S. N. ROY, Sub-Judge.

Alipore, the 21st July 1931. (1610—1—1699)

In the 4th Court of the Sub-Judge of 24-Parganas.

INSOLVENCY CASE No. 288 OF 1931.

Bisseswar Shah of 5-10, Canal East Road, Ultadanga, 24-Parganas, applicant.

To Kissen Ram Lakhmi Chand of 201, Harrison Road, Calcutta, creditor.

ON the 24th day of July 1931, it was ordered that the matter of the petition of the applicant be heard on the 31st day of August 1931 and that the said applicant do attend to be examined by this Court on that date.

S. N. ROY, Sub-Judge.

Alipore, the 27th July 1931. (1611—1—1700)

In the 4th Court of the Sub-Judge of 24-Parganas.

INSOLVENCY CASE No. 289 OF 1931.

Sheik Abdul Bari of 105-3, Karaya Road, Ballygunge, 24-Parganas, applicant.

To D. D. Meyer of 5, South Tangra Road, Calcutta, and others, creditors.

ON the 18th day of July 1931, it was ordered that the matter of the petition of the applicant be heard on the 31st day of August 1931 and that the said applicant do attend to be examined by this Court on that date.

S. N. ROY, Sub-Judge.

Alipore, the 27th July 1931. (1612—1—1701)

In the 4th Court of the Sub-Judge of 24-Parganas.

INSOLVENCY CASE No. 290 OF 1931.

Ramlal Lala of 37-2, Watganj Street, Kidderpore, 24-Parganas, applicant.

To Nassingdur Agarwala of 3, Ashu Babu Lane, Kidderpore, and others, creditors.

ON the 21st day of July 1931, it was ordered that the matter of the petition of the applicant be heard on the 31st day of August 1931 and that the said applicant do attend to be examined by this Court on that date.

S. N. ROY, Sub-Judge.

Alipore, the 22nd July 1931. (1613—1—1702)

In the 4th Court of the Sub-Judge of 24-Parganas.

INSOLVENCY CASE No. 292 OF 1931.

Sitaram Kalowar of 20, Chaulpati Lane, Bhowanipore, 24-Parganas, applicant.

To Gobardhan Das Nirmal Ram of 160, Banstola Street, Calcutta, and others, creditors.

ON the 21st day of July 1931, it was ordered that the matter of the petition of the applicant be heard on the 31st day of August 1931 and that the said applicant do attend to be examined by this Court on that date.

S. N. ROY, Sub-Judge.

Alipore, the 22nd July 1931. (1614—1—1703)

In the 4th Court of the Sub-Judge of 24-Parganas.

INSOLVENCY CASE No. 293 OF 1931.

Rajendra Nath Roy of Setpore, police-station Dogachia 24-Parganas, applicant.

To Mahadeo Sing, Khardaha Bazar, post-office Khardaha 24-Parganas, and others, creditors.

ON the 23rd day of July 1931, it was ordered that the matter of the petition of the applicant be heard on the 31st day of August 1931 and that the said applicant do attend to be examined by this Court on that date.

S. N. ROY, Sub-Judge.

Alipore, the 24th July 1931. (1615—1—1704)

In the 4th Court of the Sub-Judge of 24-Parganas.

INSOLVENCY CASE No. 294 OF 1931.

Asrafi Ram Kahar of 13, Balaram Bose's 1st Lane, Bhowanipore, 24-Parganas, applicant.

To Rambrij Ahir (goala) and Ram Rekha Ahir (goala), of 31, Dr. Rajendra Road, Bhowanipore, and others, creditors.

ON the 23rd day of July 1931 it was ordered that the matter of the petition of the applicant be heard on the 31st day of August 1931 and that the said applicant do attend to be examined by this Court on that date.

S. N. ROY, Sub-Judge.

Alipore, the 24th July 1931. (1616—1—1705)

ORDER ANNULLING ADJUDICATION.

Section 43 of the Provincial Insolvency Act, V of 1920.

In the 4th Court of the Sub-Judge at Alipore.

INSOLVENCY APPLICATION No. 312 OF 1930.

Rakhal Chandra Das, applicant.

WHEREAS Rakhal Chandra Das of Kantalpara, Naihati, 24-Parganas, debtor, does not proceed with his application for discharge, it is ordered that the order of adjudication, dated 3rd January 1931, against the debtor be and the same is hereby annulled.

Dated this 14th day of July 1931.

S. N. ROY, Sub-Judge.

ORDER ANNULLING ADJUDICATION.

Section 43 of the Provincial Insolvency Act, V of 1920.

In the 4th Court of the Sub-Judge at Alipore.

INSOLVENCY APPLICATION No. 380 OF 1930.

Abdul Aziz Molla, applicant.

WHEREAS Abdul Aziz Molla of Jagannathnagore, Mohashtala, 24 Parganas, debtor, does neither appear nor apply for his discharge within the specified time fixed for hearing, it is ordered that the order of adjudication, dated 27th January 1931, against the debtor be and the same is hereby annulled.

Dated this 27th day of July 1931.

S. N. ROY, Sub-Judge.

ANIL CHANDRA DUTTA, M.A., B.L., intends to be enrolled as an Advocate of the Calcutta High Court.

(1544—4—1558)

ASHOKE NATH MUKHERJI, B.L., M.SC., intends to be enrolled as an Advocate, Calcutta High Court.

(1536—4—1536)

BISNURAM MEDHI, M. SC., B.L., of Gauhati, intends to be enrolled as an Advocate, High Court, Calcutta.

(1541—4—1540)

HOLIRAM DEKA, M.A., B.L., intends to be enrolled as an Advocate of the High Court, Calcutta.

(1575—4—1594)

JOGESCHANDRA DE, B.L., intends to practise as an Advocate, Calcutta High Court.

(1487—4—1489)

KALYAN KUMAR BASU, M.A., B.L., intends to be enrolled as an Advocate, Calcutta High Court.

(1488—4—1504)

MR. NRIPENDRANATH DUTTA RAY, B.Sc., B.L., wants to be enrolled as an Advocate of the High Court.

(1485—4—1487)

MR. KAMALES CHANDRA SEN, M.A., B.L., intends to enroll himself as an Advocate, Calcutta High Court.

(1498—4—1508)

MR. MONINDRA CHANDRA NIYOGY intends to be enrolled as an Advocate of the Calcutta High Court.

(1502—4—1512)

MR. RAMKRISHNA PAL, B.L., intends to be enrolled as an Advocate of the Calcutta High Court.

(1509—4—1509)

MR. KASHI NATH MITTER intends to practise as an Advocate in the High Court, Calcutta.

(1510—4—1510)

MR. SAMBHU NATH BANERJEE, M.A., B.L., wants to be enrolled as an Advocate of the Calcutta High Court.

(1511—4—1531)

MR. DHIRENDRA NATH GUHATHAKURTA intends to be enrolled as an Advocate, Calcutta High Court.

(1537—4—1537)

MR. DEBENDRA NATH DATTA intends to be enrolled as an Advocate of the High Court, Calcutta.

(1545—4—1542)

MR. DHIRENDRA MOHAN DEB, B.L., intends to enroll himself as an Advocate of the Calcutta High Court.

(1558—4—1546)

MR. ATINDRA NATH BHADRA, B.L., intends to enroll himself as an Advocate of the Calcutta High Court

(1559—4—1547)

MR. PRAFULLA KUMAR RAY intends to be enrolled as an Advocate of the Calcutta High Court.

(1583—4—1597)

MR. SUKUMAR SEN GUPTA, B.L., intends to be enrolled as an Advocate of the Calcutta High Court.

(1587—4—1610)

MR. CHANDRA SEKHAR BHAWMICK, B.L., intends to be enrolled as an Advocate of the Calcutta High Court.

(1588—4—1609)

MR. UPENDRA NATH PAL, B.L., intends to be enrolled as an Advocate of the Calcutta High Court.

(1631—4—1611)

RAJENDRA NATH BHATTACHARYYA, M.A., B.L., intends to be enrolled as an Advocate of the High Court.

(1542—4—1548)

RAJENDRA NARAYAN ROY, M.A., B.L., intends to be enrolled as an Advocate of the Calcutta High Court.

(1568—4—1612)

NOTICE is hereby given that Mr. Bhurmal Agrawal, of No. 19, Tarachand Dutt Street, Calcutta, who was lately under Articles of Clerkship to Mr. Sanat Kumar Chatterji, Advocate, intends to apply to be admitted as an Advocate of the High Court of Judicature at Fort William in Bengal.

Dated this 17th day of July 1931.

(1535—4—1535)

APPLICATIONS are invited for the post of two typists, one Hindu and one Muhammadan, in the office of the Commissioner, Presidency Division, on a salary of Rs. 45 in the grade of Rs. 45—45/2—70. None need apply who has not passed at least the Matriculation Examination and can type at a net minimum speed of 40 words per minute. His age should not exceed 25 years.

Applications stating age, educational qualifications and other references together with certificates of good moral character should reach the undersigned on or before 15th August 1931.

N. K. RAY, Personal Assistant to Commissioner,
Presidency Division.

3, Charnock Place, Calcutta, the 5th August 1931.

WANTED a Professor of English for the Hooghly College, in the Bengal Educational Service, with effect from 16th November 1931 or as soon after that date as possible.

2. Candidates for direct appointment should be British subjects and must not be over 45 years of age. They must possess a first class degree of M. A. of an Indian University or a good Honours degree of a European University with satisfactory evidence of teaching experience for at least three years; capacity for original research will ordinarily be required to be proved except in cases where teaching ability of a special nature is possessed. In the case of candidates for appointment by promotion from the Subordinate Educational Service, a first or second class degree of M. A. of an Indian University or an Honours degree (or corresponding qualification) of a European University, with a satisfactory record of teaching is required.

3. Applications supported by documentary evidence of the qualifications possessed should reach the Principal, Hooghly College, on or before the 31st August 1931.

WANTED a District Engineer for the District Board of Hooghly on Rs. 300—20/2—400 and second class travelling allowance according to the Fundamental Rules. Applicants should possess the necessary qualifications as required under the rules framed under the Bengal Local Self-Government Act. The selected candidate will be on probation for one year and will have to join on 1st of October 1931. No travelling allowance will be paid to join the appointment. Applications stating age, qualifications and past experience with true copies of testimonials and certificates should be sent in sealed and registered covers and superscribed as "Application for appointment of District Engineer" to the undersigned by the 25th August 1931. Canvassing will be considered a disqualification. The applicant should state if he bears any relationship to any of the members of the Board.

Candidates, if required, shall have to come for interview at their own expense.

TARAKNATH MUKERJEA, Chairman,
District Board, Hooghly.

Chinsura, the 29th July 1931. (1597—3)

THE Bengal and Madras Service Family Pension Fund which is provisionally managed and assisted by Government has for its object the provision of monthly pensions for the maintenance of the widows and children of subscribers and is open, with certain exceptions, to all active and pensioned members of the Uncovenanted service of Government (except those serving under the Government of Bombay), and to Local Fund servants earning pensions from Government. Some of the special features of the fund are—(1) that widowed daughters incapable of remarriage or children labouring under such mental or bodily infirmities as incapacitate them from earning their livelihood or preclude the possibility of marriage (in case of a daughter) are admitted to its benefits; and (2) that subscribers to the Widows' and Daughters' branches are entitled to a refund of 30 per cent. of the premia paid, should the nominee predecease them after five years of admission. The second quinquennial valuation of the Fund has been completed by the actuary to the Government of India, and his report discloses very favourable results. For forms of application and rules of the Fund apply to the Accountant-General, Bengal, Imperial Secretariat Buildings, Calcutta.

Currency Notes.

PORTIONS of the following Currency Notes of the Calcutta Circle of issue are stated to have been destroyed and payment of their value has been claimed by the persons whose names are shown against the numbers.

Any other person claiming a right to them is warned to communicate at once with the undersigned.

Registered No.	Note No.	Value. Rs.	Name and address of the claimant.
W.D. 10 of 31-32.	8-44,608901	100	Murlimull Radhakishan, Sudder Bazar, Ambala.
	8-52,182632	100	
	8-52,217779	100	
	8-52,308738	100	
	8-52,310080	100	
	8-52,308739	100	

B. C. DUTT, Currency Officer.

Currency Office, Calcutta, the 7th August 1931.

Lost.

THE lower halves of the Government Promissory Notes Nos. 177497 and 148883 of the 3½ per cent. loans of 1854-55 and 1842-43 for Rs. 500 each, originally standing in the names of Amrita Chandra Ghose and the Bank of Bengal, respectively, and last endorsed to the Secretary, Gabha High School, the proprietor, by whom they were never endorsed to any other person, having been lost, notice is hereby given that payment of the above notes and the interest thereupon have been stopped at the Public Debt Office, Imperial Bank of India, Calcutta, and that application is about to be made for the issue of duplicates in favour of the proprietor. The public are cautioned against purchasing or otherwise dealing with the abovementioned securities.

Name of the Advertiser—Priyanath Ghose, Head Master and Assistant Secretary.
Residence—Gabha High School, Gabha, district Barisal.

(962—3- 1541)

Imperial Library.

(Secretariat Buildings, 6, Esplanade East, Calcutta.)
Open on—

Weekdays and Saturdays from 10 A.M. to 7 P.M.
Sundays and Gazetted holidays from 2 P.M. to 5 P.M.

THE Imperial Library is also a Lending Library. It is free to all except children. There is no subscription to pay.

K. M. ASADULLAH, Librarian.

CINCHONA FACTORY PRODUCTS.

By order of the Government of Bengal Cinchona Factory Products as manufactured and packed at the Cinchona Factory, Mungpoo, Darjeeling district, will be sold and distributed by the **Superintendent, Presidency Jail,** *in original packages* as received from the Mungpoo Factory at the rates noted below **from the 1st May 1926 :—**

Quinine Sulphate.

For 60 lbs. and upwards at a time .. Rs. 18 per lb.
For 6 lbs. and over but less than 60 lbs. at a time .. .. .. „ 19 „
For any quantity less than 6 lbs. .. „ 20 „

Quinine Hydrochloride.

For 60 lbs. and upwards at a time .. Rs. 23 per lb.
For 6 lbs. and over but less than 60 lbs. at a time .. .. .. „ 24 „
For any quantity less than 6 lbs. .. „ 25 „

Quinine Di-Hydrochlor.

For 60 lbs. and upwards at a time .. Rs. 25 per lb.
For 6 lbs. and over but less than 60 lbs. at a time .. .. .. „ 26 „
For any quantity less than 6 lbs. .. „ 27 „

Quinidine Sulphate.

For 60 lbs. and upwards at a time .. Rs. 20 per lb.
For 6 lbs. and over but less than 60 lbs. at a time .. .. .. „ 21 „
For any quantity less than 6 lbs. .. „ 22 „

Cinchonidine Sulphate.

For 60 lbs. and upwards at a time .. Rs. 25 per lb.
For 6 lbs. and over but less than 60 lbs. at a time .. .. .. „ 26 „
For any quantity less than 6 lbs. .. „ 27 „

Cinchonine Sulphate.

For 60 lbs. and upwards at a time .. Rs. 12 per lb.
For 6 lbs. and over but less than 60 lbs. at a time .. .. .. „ 13 „
For any quantity less than 6 lbs. .. „ 14 „

Cinchona Febrifuge (Powder).

For 6 lbs. and over at a time .. Rs. 9 per lb.
For any quantity less than 6 lbs. .. „ 10 „

Cinchona Febrifuge (Tablets).

For 6 lbs. and over at a time .. Rs. 10 per lb.
For any quantity less than 6 lbs. .. „ 11 „

Quinoidine (Tablets).

For 6 lbs. and over at a time .. Rs. 5 per lb.
For any quantity less than 6 lbs. .. „ 6 „

Quinoidine (in Mass).

For 6 lbs. and over at a time .. Rs. 4 per lb.
For any quantity less than 6 lbs. .. „ 5 „

Cinchona Bark (in 50 pound original bags).

Per bag .. .. .. Rs 25.

Transit charges extra in every case.

Quinine Sulphate is for sale to Government Institutions and Missionaries only. It is not for sale to Private Firms or the General Public.

Cinchona Febrifuge in Powder and Tablet form (when in stock) is for sale to Government Institutions, Missionaries and the General Public.

Quinine Sulphate will be supplied to Hospitals and Dispensaries of this Presidency only at the wholesale rate of Rs. 18 per lb., irrespective of quantities. For all other purchasers the rates given above will apply.

Provinces other than Bengal, Bihar and Orissa and Assam will get their supplies of Sulph. Quinine from the Director, Botanical Survey of India, Sibpur, Howrah.

Local sale at the jail gate from 2 to 4 p.m.

The system of payment is by—*Cash in advance*—by "*Treasury Chalans,*" which should accompany the order or indent.

In cases where this is not possible, payment should be made by "*Remittance Transfer Receipts*" or crossed "*Cheques.*"

Indents unaccompanied by cash in advance will be sent Value Payable Post. Credit sale is not allowed except under special circumstances.

In the case of *Government officers* payment will be recovered by *Book Transfer, i.e., Countersigned Invoices* in the event of *Cash* not accompanying the indent by "*Treasury Chalans,*" *Remittance Transfer Receipts* or *Cheque.*

2. Price and postage must accompany the price of the drug (when the drug is required by post).

3. The name of the Railway and Steamer Station or Post Office must be written distinctly when the parcels are required by Rail, Steamer or Post. *Railway parcels are sent by passenger train only.*

4. A scale of postage is given below :—

For ¼ lb. 4 annas, ½ lb. 5 annas, 1 lb. 8 annas, 1½ lbs. 11 annas, 2 lbs. 14 annas, 2½ lbs. Re. 1-1, 3 lbs. Re. 1-1, 3½ lbs. Re. 1-4, 4 lbs. Re. 1-7, 5 lbs. Re. 1-13, 5½ lbs. Re. 1-13, 6 lbs. Rs. 2.

Two different drugs are not packed in the same parcel and postage must be paid separately for each kind.

N.B.—Postage stamps are not accepted as revenue.

Government reserve the right to alter the price without notice.

The Calcutta Gazette

THURSDAY, AUGUST 13, 1931.

Part IV

Bills introduced in the Bengal Legislative Council, Reports of Select Committees presented or to be presented to that Council, and Bills published before introduction in that Council.

GOVERNMENT OF BENGAL.

Legislative Department.

NOTIFICATION.

No. 2467L.—6th August, 1931.—In pursuance of the provisions of rule 20 of the Bengal Legislative Council Rules, 1920, the following Bill which was introduced in the Bengal Legislative Council on the 24th July, 1931, is hereby published for general information together with the Statement of Objects and Reasons annexed thereto :—

THE CALCUTTA MUNICIPAL (AMENDMENT) BILL, 1931.

A

BILL

to amend the Calcutta Municipal Act, 1923

Preamble

WHEREAS it is expedient to amend the Calcutta Municipal Act, 1923, in the manner hereinafter appearing so as to redistribute the areas of Wards Nos. 28 and 29 with a view to equalize the areas of the said Wards,

It is hereby enacted as follows :—

Short title.

1. This Act may be called the Calcutta Municipal (Amendment) Act, 1931.

Commencement.

2. It shall come into force on such date as the Local Government may, by notification in the *Calcutta Gazette*, direct.

Amendment of Schedule VII.

3. (*i*) In Schedule VII, column 3, against Ward No. 28, for the expression "Narikeldanga Main Road" the expression "Maniktola Main Road" is to be substituted

(*ii*) In Schedule VII, column 4, against Ward No. 29, for the expression "Narikeldanga Main Road" the expression "Maniktola Main Road" is to be substituted.

STATEMENT OF OBJECTS AND REASONS.

The Bill is intended to remove the difficulties that the residents of Ward No. 29 feel in having their needs being attended to by one elected Councillor. It follows as a matter of consequence that it is impossible for one Councillor to attend to the needs of residents of such a large area. It will be remembered that under the old Maniktola Municipality there were three Wards Nos. 1, 2 and 3 which, after its amalgamation with the Corporation of Calcutta under the new Calcutta Municipal Act of 1923, were reconstituted into two Wards, Nos. 1 and 2 of the old Municipality being practically reformed as Ward No. 29 under the new constitution. The result has been that while the old Ward No. 3 of the old Maniktola Municipality with its lesser area and lesser number of voters has been given two elected Councillors, Ward No. 29, which was originally Wards Nos. 1 and 2 of the old Maniktola Municipality, with its larger area and greater number of voters has been given only one elected Councillor. The amendment proposed only aims at the removal of the several difficulties of the said Ward by suggesting that a portion from the southern side of Ward No. 29, as indicated in the amendment, will be transferred to Ward No. 28, while the said latter Ward will retain its two elected seats. And it will remove a portion of the congestion of Ward No. 29 and will leave the affairs of the ratepayers of the said Ward at whose instance the Bill is being introduced in the Council to be properly looked after by one elected Councillor.

MUKUNDA BEHARY MULLICK,

Member-in-charge.

The 3rd July, 1931

J. BARTLEY,

Secy to the Bengal Legis Council

GOVERNMENT OF BENGAL.

Legislative Department.

NOTIFICATION.

No. 2468 L.—6th August, 1931.—In pursuance of the provisions of rule 20 of the Bengal Legislative Council Rules, 1920, the following Bill which was introduced in the Bengal Legislative Council on the 24th July, 1931, is hereby published for general information together with the Statement of Objects and Reasons annexed thereto :—

THE BENGAL TENANCY (AMENDMENT) BILL, 1931.

A
BILL

further to amend the Bengal Tenancy Act, 1885, as amended by the Bengal Tenancy Amendment Act (Bengal Act IV of 1928).

Preamble. WHEREAS it is expedient further to amend the Bengal Tenancy Act of 1885 as amended by the Bengal Tenancy Act of 1928 in the manner hereinafter appearing ;

AND WHEREAS the previous sanction of the Governor General under sub-section (*3*) of section 80A of the Government of India Act has been obtained to the passing of this Act ; 5 & 6 Geo. V. c. 61 ; 6 & 7 Geo V. c 37 ; 9 & 10 Geo V. c. 101.

It is hereby enacted as follows :—

Short title and commencement. **1.** (*1*) This Act shall be called the Bengal Tenancy (Amendment) Act, 1931.

(*2*) It shall come into force at once.

Amendment of section 148 of Act VIII of 1885. **2.** In section 148 after the words " suits for the recovery of rent " the words " and for enhancement of rent " shall be added.

Amendment of section 148. **3.** In section 148, clause (*h*), after the words " notwithstanding anything contained in rule 4 (*3*) of Order XXXII in Schedule I to the Code of Civil Procedure, 1908, the Court may serve on the natural guardian of a minor defendant in a suit for arrear of rent " the words " and for enhancement of rent and in execution proceedings of such decrees " shall be added.

Amendment of section 148. **4.** To section 148 the following sub-section be added after (*h*) : —

" (*hh*) The Court may, in addition to the service of the notice mentioned in sub-section (*h*), issue a registered post-card upon the natural guardian of the minor defendant and the cost of such registered post-card shall be paid by the plaintiff."

STATEMENT OF OBJECTS AND REASONS.

Under the provisions of the Bengal Tenancy Amendment Act IV of 1928 a natural guardian may be appointed as guardian *ad litem* of a minor defendant in a rent suit even if he does not appear before the Court and give his assent to such appointment. The result is that the parties are not saddled with further cost in the shape of a guardian fee which ultimately devolves upon the tenant ; for some time this procedure was followed in execution of rent decrees and in suits for enhancement of rent. But by a letter No. 28G., dated the 3rd January, 1930, addressed to the District Judge of Jessore, the Registrar of the Hon'ble the High Court directed that guardian fees shall be payable in execution of rent decrees and in suits for enhancement of rent. This is anomalous. If guardian fee is not payable for obtaining a rent decree it should not be payable for executing the decree. A suit for enhancement of rent is necessarily a rent suit as it is brought under the provisions of the Bengal Tenancy Act. Hence if guardian fee is not payable in rent suits it should not be payable in suits for enhancements of rent. Moreover, it ultimately devolves upon the poor tenant as an additional burden.

To remove this anomaly and this hardship this amendment has been brought.

SYED MAJID BAKSH,
Member-in-charge.

The 14th January, 1931.

J BARTLEY,
Secy. to the Bengal Legis. Council

GOVERNMENT OF BENGAL.

Legislative Department.

NOTIFICATION.

No. 2469L.—6th August, 1931.—In pursuance of the provisions of rule 20 of the Bengal Legislative Council Rules, 1920, the following Bill which was introduced in the Bengal Legislative Council on the 24th July, 1931, is hereby published for general information together with the Statement of Objects and Reasons annexed thereto :—

THE BENGAL PATNI SALE LAW (AMENDMENT) BILL, 1931.

A

BILL

further to amend the Patni Sale Law, Regulation VIII of 1819.

Preamble.

WHEREAS it is expedient to amend the Patni Sale Law, Regulation VIII of 1819, in the manner hereinafter appearing so as to facilitate the annulment of patni sales as can be done in Civil Court sales, rent sales and certificate sales ;

AND WHEREAS the previous sanction of the Governor General under sub-section (3) of section 80A of the Government of India Act has been obtained to the passing of this Act ; 5 & 6 Geo. V. c. 61 ; 6 & 7 Geo. V. c. 37 ; 9 & 10 Geo. V. c. 101.

It is hereby enacted as follows :—

Short title.

1. This Act may be called the Bengal Patni Sale Law Regulation (Amendment) Act, 1931.

Insertion of new section 14A.

2. After section 14 of the said Regulation, the following section shall be inserted :—

Deposit in Court by persons interested.

" 14A. (*1*) It shall also be competent for any person either owning property or holding an interest therein by virtue of a title acquired before such sale to apply to the Collector holding such sale within thirty days from the date of sale to have the sale annulled on his depositing in Court—

(*a*) a sum equal to five per cent. of the purchase money and in no case less than one rupee for payment to the purchaser ;

(*b*) full amount of the sum taken or to be taken out of the purchase money by the zamindar concerned, and

(*c*) a sum equal to one per cent. of the net proceeds realised by the sale to meet the Government demand under section 17, second clause ;

and the Collector on being satisfied of such deposits shall order setting aside the sale.

(*2*) Notwithstanding anything contained above the Collector holding any patni sale may entertain an application under section 14A after the expiry of the time mentioned therein if there are reasonable grounds for so doing."

Amendment of section 15.

3. After the words " under this regulation " in the first paragraph of the first section 15, the following words shall be inserted, " but not before expiry of the 40th day from the date of the sale."

STATEMENT OF OBJECTS AND REASONS.

Provision has been made in the Civil Procedure Code, the Bengal Tenancy Act and in the Public Demands Recovery Act for setting aside sales held under the provisions of those Acts by deposits within 30 days from the date of any sale. These provisions have been working well and are being largely availed of by persons affected in those sales. No such provision, however, has yet been made in cases of sales under the Bengal Patni Sale Law, Regulation VIII of 1819.

The intention of this Bill is to provide facility for annulling sales held under the Bengal Patni Sale Law, Regulation VIII of 1819, by depositing the full amount of dues claimed by the zamindars concerned together with sums equal to five per cent. of the purchase monies but in no case less than one rupee for the purchaser and one per cent. under section 17 within 30 days from the date of the sales as can be done in the civil Court sales, rent sales and certificate sales.

Opportunity has been taken for amendment of section 15 of the Regulations for avoiding difficulties for smooth work.

KISHORI MOHAN CHAUDHURI,

Member-in-charge.

The 13th February, 1931.

J. BARTLEY,

Secy. to the Bengal Legis. Council

GOVERNMENT OF BENGAL.

Legislative Department.

NOTIFICATION.

No. 2470L.—6th August, 1931.—In pursuance of the provisions of rule 20 of the Bengal Legislative Council Rules, 1920, the following Bill which was introduced in the Bengal Legislative Council on the 24th July, 1931, is hereby published for general information together with the Statement of Objects and Reasons annexed thereto :—

THE BENGAL MUNICIPAL (AMENDMENT) BILL, 1931.

A

BILL

further to amend the Bengal Municipal Act, 1884.

Preamble.

WHEREAS it is expedient further to amend the Bengal Municipal Act, 1884, in the manner hereinafter appearing ; Bengal Act III of 1884.

It is hereby enacted as follows :—

Short title and commencement.

1. (*1*) This Act may be called the Bengal Municipal (Amendment) Act, 1931.

(*2*) It shall come into force on such date as the Local Government may, by notification in the *Calcutta Gazette*, direct.

Amendment of Section 15.

(*3*) In the proviso to section 15, line 1 of the Bengal Municipal Act, 1884, after the words " every male," the words " and every female " shall be added.

STATEMENT OF OBJECTS AND REASONS.

By notification No. 11762A., dated the 7th October, 1925, published in the *Calcutta Gazette*, dated the 15th October, 1925, Part I, page 1606, the Governor in Council, in pursuance to a Resolution passed by the Bengal Legislative Council, on the 19th August, 1925, recommending that the sex-disqualification for registration on the electoral rolls be removed, made the following regulations :—

1. (*1*) This regulation may be called " The Bengal Electoral Sex-disqualification Removal Regulation."

(*2*) It shall come into force at once.

2. Notwithstanding anything contained in rule 7 of the Bengal Electoral Rules no women shall be disqualified for registration on the electoral roll of any constituency specified in Schedule I to the said rules by reason only of her sex.

The Calcutta Municipal Act, 1923 (Bengal Act No. III of 1923) also removed the sex-disqualification for registration on the electoral roll of the Calcutta Corporation.

The object of this Bill is to remove sex-disqualification in municipalities administered under the Bengal Municipal Act, 1884. It is inconsistent that females should exercise votes in the Bengal Legislative Council elections both in the urban and rural areas while they will be deprived of exercising their franchise in the municipal elections. It is with a view to remove this anomaly that this Bill has been introduced so that sex-disqualification alone may not be a bar to the exercise of franchise by the women-folk living within municipal limits.

MUNINDRA DEB RAI MAHASAI,

Member-in-charge.

The 28th June, 1931.

J. BARTLEY,

Secy. to the Bengal Legis. Council.

GOVERNMENT OF BENGAL.

Legislative Department.

NOTIFICATION.

No. 2471L.—6th August, 1931.—It is hereby notified for general information that at the meeting of the Bengal Legislative Council, held on the 24th July, 1931, a motion was carried that the Bengal Municipal (Amendment) Bill, 1931, by Munindra Deb Rai Mahasai, M.L.C., be circulated for the purpose of eliciting opinion thereon before the 1st November, 1931. Expressions of opinion by public bodies or by individuals interested in the said Bill which is published together with its Statement of Objects and Reasons in this Gazette should be sent so as to reach the undersigned before that date.

J. BARTLEY,
Secy. to the Bengal Legis. Council.

GOVERNMENT OF BENGAL.

Legislative Department.

NOTIFICATION.

No. 2473 L.—6th August 1931.—In pursuance of the provisions of rule 20 of the Bengal Legislative Council Rules, 1920, the following Bill which was introduced in the Bengal Legislative Council on the 24th July, 1931, is hereby published for general information together with the Statement of Objects and Reasons annexed thereto :—

THE BENGAL VILLAGE SELF-GOVERNMENT (AMENDMENT) BILL, 1931.

A

BILL

further to amend the Bengal Self-Government Act, 1919.

Preamble.

WHEREAS it is expedient further to amend the Bengal Village Self-Government Act, in the manner hereinafter appearing ; Ben. Act V of 1919.

It is hereby enacted as follows :—

Short title and commencement.

1. (*1*) This Act may be called the Bengal Village Self-Government (Amendment) Act, 1931.

(*2*) It shall come into force on such date as the Local Government may, by notification in the *Calcutta Gazette*, direct.

2. After sub-section (*f*) of section 31 of the Bengal Village Self-Government Act, 1919, the following sub-section shall be added :—

New section 31(*g*).

" (*g*) may undertake small irrigation projects."

Amendment of section 32.

3. Section 32 of the said Act shall be renumbered as sub-section (*1*) of section 32 and to that section as renumbered the following sub-section shall be added, namely :—

"(*2*) The union board may, subject to any rules made under section 101, make grants to public libraries, reading rooms and dispensaries under public or private management."

Amendment of section 45.

4. In line 1 of section 45 in place of the word " may " the word " shall " shall be substituted.

Amendment of section 56(*1*).

5. In line 7 of section 56(*1*), after the word " may " the words " with the approval of the Local Government " shall be added.

STATEMENT OF OBJECTS AND REASONS.

The Bill has been framed at the instance of several public bodies who keenly felt the necessity of such amendments. The amendments of section 31 and section 45 were urged at the Conference of the Presidents of Union Boards held at Chinsurah under the presidency of Mr. A. S. Larkin, I.C.S., Magistrate and Collector of Hooghly. For want of a permissive clause to undertake small irrigation projects, union boards could not take them up even if they succeeded in raising funds for the purpose.

As to the amendment of section 45 the concensus of opinion at the conference was that the District Boards should contribute their *quota* to union boards as funds permitted and it should not be left to chance or to individual likes or dislikes.

The amendment of section 32 will remove a legal bar and enable the union boards to grant aids to libraries and reading rooms if they feel inclined to do so.

The amendment of section 56(*1*) will help to remove a long-felt grievance of union boards. They think that the removal of the President or the supersession of union boards were serious matters which should have the approval of the Local Government.

In view of the importance of the amendments, it is hoped that the Council will extend its support to the Bill.

MUNINDRA DEB RAI MAHASAI,
Member-in-charge.

The 4th July, 1931.

J. BARTLEY,
Secy. to the Bengal Legis. Council.

GOVERNMENT OF BENGAL.

Legislative Department.

NOTIFICATION.

No. 2474 L.—6th August, 1931.—It is hereby notified for general information that at the meeting of the Bengal Legislative Council held on the 24th July, 1931, a motion was carried that the Bengal Village Self-Government (Amendment) Bill, 1931, by Munindra Deb Rai Mahasai, M.L.C., be circulated for the purpose of eliciting opinion thereon before the 1st November, 1931. Expressions of opinion by public bodies or by individuals interested in the said Bill which is published together with its Statement of Objects and Reasons in this Gazette should be sent so as to reach the undersigned before that date.

J. BARTLEY,
Secy. to the Bengal Legis. Council.

GOVERNMENT OF BENGAL.

Legislative Department.

NOTIFICATION.

No. 2476L.—6th August, 1931.—In pursuance of the provisions of rule 20 of the Bengal Legislative Council Rules, 1920, the following Bill which was introduced in the Bengal Legislative Council on the 24th July, 1931, is hereby published for general information together with the Statement of Objects and Reasons annexed thereto :—

THE BENGAL MUNICIPAL (AMENDMENT No. II) BILL, 1931.

A

BILL

further to amend the Bengal Municipal Act, 1884.

Preamble. WHEREAS it is expedient further to amend the Bengal Municipal Act, 1884, in the manner hereinafter appearing;

It is hereby enacted as follows :—

Short title and commencement. **1.** (*1*) This Act may be called the Bengal Municipal (Amendment) Act, 1931.

(*2*) It shall come into force on such date as the Local Government may, by notification in the *Calcutta Gazette*, direct.

Amendment of section 86 of Bengal Act III of 1884. **2.** After sub-section (*f*) of section 86 of the Bengal Municipal Act, 1884, the following sub-section shall be inserted :—

"(*g*) a tax on the trades, professions and callings specified in Schedule VII at such rates as may be fixed by the Commissioners with the approval of the Local Government and under such conditions and limitations as the Local Government may by rule prescribe."

Insertion of new seventh schedule. **3.** That after schedule sixth of the Bengal Municipal Act, the following schedule shall be added :—

THE SEVENTH SCHEDULE.

Tax on trades, professions and callings.

Every licence shall be granted under one or other of the following classes mentioned in the second column of the following table and there shall be paid annually for the same a fee not exceeding the fee mentioned in that behalf in the third column of the table :—

Serial No.	Classes.	Maximum half-yearly tax in rupees.
		Rs.
1.	Company transacting business within the municipality for profit or as a benefit society of which the paid-up capital is equivalent to—	
	(*a*) Rs. 10,00,000 and upwards ..	500
	(*b*) More than Rs. 5,00,000 but not more than Rs. 10,00,000 ..	100
2.	Merchant, banker, wholesale trader, owner or occupier of a market, bazar or theatre or place of public entertainment, broker or dalal in jute, cotton, precious stones, landed property, country produce, silk or other merchandise—	
	whose place of business is valued under this Act at not less than Rs. 50 per mensem	50

The Bengal Municipal (Amendment No. II) Bill, 1931.

(Clause 3.)

Serial No.	Classes.	Maximum half-yearly tax in rupees
		Rs.
3.	Any person referred to in serial No. 2 whose place of business is valued under this Act at not less than Rs. 25 per mensem	25
4.	Commission agent, architect, engineer, contractor, medical practitioner, dentist, barrister, pleader—	
	(*a*) whose income exceeds Rs. 250 per mensem	25
	(*b*) whose income is less than Rs 250 per mensem	12
5.	Retail traders or shop-keeper, boarding-house-keeper, hotel-keeper, lodging-house-keeper—	
	whose place of business is valued under this Act at not less than—	
	(*a*) Rs. 25 per mensem	12
	(*b*) Rs. 12 per mensem ..	4

STATEMENT OF OBJECTS AND REASONS.

The object of this Bill is to supplement the income of the municipalities in Bengal by the levy of a tax on the trades, professions and callings which have hitherto remained untapped. The financial condition of most of the municipalities in Bengal are far from satisfactory. The rate-payers had been the subject of increased taxation from time to time during the general assessments but still they are inadequate to meet the growing sanitary needs of the municipalities which necessitate the exploration of other avenues of income. Great care has been taken in preparing the schedule of taxes so that it might not affect the small capitalists, traders and professional men. Only those who have got the paying capacity have been moderately taxed. The Calcutta Municipal Act of 1923 provides for such taxation and the Bengal Municipal Bill, 1925, sponsored by the late Maharaja Kshaunish Chandra Ray also proposed to levy such taxes.

In view of the financial stringency of most of the municipalities in Bengal, it is hoped that this Council will extend its sympathy and support to the Bill.

MUNINDRA DEB RAI MAHASAI,

Member-in-charge.

The 1st July, 1931.

J. BARTLEY,

Secy. to the Bengal Legis. Council.

GOVERNMENT OF BENGAL.

Legislative Department.

NOTIFICATION.

No. 2477 L. –6th August, 1931.—It is hereby notified for general information that at the meeting of the Bengal Legislative Council held on the 24th July, 1931, a motion was carried that the Bengal Municipal (Amendment No. 11) Bill, 1931, by Munindra Deb Rai Mahasai, M L.C., be circulated for the purpose of eliciting opinion thereon before the 1st November, 1931. Expressions of opinion by public bodies or by individuals interested in the said Bill which is published together with its Statement of Objects and Reasons in this Gazette should be sent so as to reach the undersigned before that date.

J. BARTLEY,
Secy. to the Bengal Legis. Council.

GOVERNMENT OF BENGAL.

Legislative Department.

NOTIFICATION.

No 2479L.—6th August, 1931.—In pursuance of the provisions of rule 20 of the Bengal Legislative Council Rules, 1920, the following Bill which was introduced in the Bengal Legislative Council on the 24th July, 1931, is hereby published for general information together with the Statement of Objects and Reasons annexed thereto :–

THE BENGAL MUNICIPAL (AMENDMENT) BILL, 1931.

A

BILL

to amend the Bengal Municipal Act (Act No. III of 1884).

WHEREAS it is expedient to amend the law relating to municipalities in Bengal.

It is hereby enacted as follows :—

Preliminary.

Short title and commencement.

1. This Act may be called the Bengal Municipal Amendment Act, 1931.

Removal of Commissioner by Commissioner of the Division.

2. After clause (*d*) of sub-section (*1*) of section 20, the following shall be added :—

" (*e*) if he defaults in the payment of the taxes due from him for four successive quarters after the disposal of his application, if any, under section 113."

Tenure of office under sections 21, 24 and 25.

3. After section 26 the following proviso shall be added :—

" provided that in the case of the last general election being declared null and void by a competent authority, the Local Government shall appoint a new body of Commissioners not less than two-thirds of the total number of Commissioners of the municipality, one of whom shall be appointed as Chairman, another as Vice-Chairman to carry on the administration of the municipality during the period which may elapse between the passing of such order declaring the election invalid and the first effective meeting of the reconstituted body of Commissioners."

Resignation of Chairman and Vice-Chairman.

4. After the words " a quorum shall be present " in the first paragraph of section 26A, the following proviso shall be added :—

" provided that in the event of the Chairman and Vice-Chairman failing to tender their resignations, they shall be deemed to have automatically vacated their respective offices."

Additional taxes.

5. After the word " carriages " in clause (*a*) of section 86, the words " omnibuses, motor cars, motor cycles, bicycles, jin-rickshaws and similar vehicles propelled by mechanical power " shall be inserted.

Buildings exempted from tax.

6. After the word " used " in the second paragraph of section 98, the word " exclusively " shall be inserted.

Preparation of valuation and rating list.

7. After the words " the last preceding section " in section 103, the words " and after any general re-assessment of holdings " shall be inserted.

Tax due from owner may be recovered from occupier and deducted by him from his rent under certain circumstances.

8. In section 105, after the word " unknown " the words " or the moveable property belonging to the owner is not sufficient for the realisation of the taxes " shall be inserted and the proviso to the section shall be deleted.

The Bengal Municipal (Amendment) Bill, 1931.

(Clauses 9—17.)

Application for reduction of assessment.

9. The words " beyond the control of the owner thereof " and the words " of the same " in section 107 shall be deleted and the following shall be inserted after the word " valuation " at the end of the section :—

" and the Commissioners may reduce the same. Such reduction shall take effect from such date as the Commissioners may direct."

Power to revise valuation and assessment.

10. After the word " building " in the last line of the first paragraph of section 108, the words " or by the amalgamation of two or more holdings " shall be inserted.

After the (last) word " thereon " in the first paragraph of the aforesaid section, the words " and may split up any holding and reassess the same separately " shall be inserted and after the first paragraph of section 108, the following shall be added :—

" Provided that no notice shall be necessary in such cases as required by section 112."

Mutation of name.

11. For the words " such person shall be liable..... after the date of transfer " in section 109, the following shall be substituted :—

" Such person shall be liable to pay the arrear and current rates payable on such holding."

Application for review.

12. In section 113, after the words " assessed upon him " the words " under sections 103, 107 and 108 " shall be inserted.

Bill and notice of demand to be presented.

13. After the words " with a copy of the Bill " in the second paragraph of section 120, the words " or bills " shall be inserted. This will involve consequential changes in form A of the Fourth Schedule.

If not paid in fifteen days, process of distress may issue.

14. For the words " three months " in section 121, the words " six months " shall be substituted.

15. In form B of the Fourth Schedule (see section 121) after the words " if the amount demanded be paid " the words " before the actual seizure of articles, one-fourth of the fees shall be realised " shall be inserted.

Commissioners may bring suit instead of distraining or on failure of distress.

16. At the end of section 129, after the word " jurisdiction " the words " and such tax shall be the first charge upon the holding for which the tax is due " shall be inserted.

Tax on carriages, omnibuses, motor cars, motor cycles, bicycles, jin-rickshaws, horses and other animals.

17. After the words " a tax on carriages " in first paragraph of section 131, the words " omnibuses, motor cars, motor cycles, bicycles, jin-rickshaws and other vehicles propelled by mechanical power " and after the words " every carriage " in the same paragraph the words " omnibus and vehicle of the above description " shall be inserted.

Consequential changes shall also be made in clauses (*c*) and (*g*) of the said section.

The Bengal Municipal (Amendment) Bill, 1931.

(Clauses 18—24.)

18. For the Fifth Schedule (see sections 86 and 131) the following shall be substituted :—

THE FIFTH SCHEDULE.

See sections 86 and 131.

Tax on carriages, omnibuses, motor cars, motor cycles, bicycles, jin-rickshaws, horses and animals.

	Per half year. Rs.	A.
(1) On every omnibus propelled by mechanical power	15	0
(2) On every motor car propelled by mechanical power	10	0
(3) On every motor cycle, sidecar or other vehicle propelled by mechanical power not included in class 1 and 2 ..	6	0
(4) On every bicycle of ordinary type (not propelled by mechanical power) ..	1	8
(5) On every jin-rickshaw	3	0
(6) On every 4-wheeled carriage drawn by two horses	9	0
(7) On every 4-wheeled carriage drawn by one horse or a pair of ponies under thirteen hands	6	0
(8) On every 4-wheeled carriage drawn by one pony under thirteen hands ..	5	0
(9) On every 2-wheeled carriage ..	5	0
(10) On every horse	4	0
(11) On every poney under thirteen hands and on every mule and donkey ..	1	8
(12) On every elephant	12	0
(13) On every camel	4	0

Carriages, the wheels of which do not exceed twenty-four inches in diameter are exempted.

Police-officers to assist.

19. After the word "tolls" in section 169, the words "taxes, rents or other municipal dues" shall be inserted.

Imposition of water rate.

20. In sub-section (*3*) of section 279, for the word "occupiers," the word "owners" shall be substituted.

Owner may recover water rate from occupier as rent.

21. For section 281, the following shall be substituted :—

"Every owner is entitled to recover from the occupier or occupiers the water rate in full or in part along with the rent in respect of such portion of the holding as may be in his or their occupation."

Recovery of fees.

22. In sub-section (*1*) of section 322, for the words "the occupier for the time being of the holding or by the owner thereof if there is no occupier" the words "the owner of the holding" shall be substituted. And in the said sub-section for the words "section 110," the words "sections 107, 108 and 110" shall be substituted.

The proviso of section 322 shall be deleted.

Owner may recover fees from occupier as rent.

23. For sections 323 and 324 the following shall be substituted :—

"Every owner is entitled to recover from the occupier or occupiers such fees in full or in part along with the rent in respect of such portion of the holding as may be in his or their occupation."

Power to sell unclaimed holdings for money due.

24. After the word "disputed" in the first paragraph of section 361 the following shall be inserted :—

"or if the owner fails to pay his taxes for twelve consecutive quarters."

STATEMENT OF OBJECTS AND REASONS.

1. The amendment of the Bengal Municipal Act (No. III of 1884) is long overdue. A Bill to consolidate and amend the law relating to municipalities in Bengal was prepared in 1923 by the late Hon'ble Sir Surendra Nath Banerjea, KT., then Minister-in-charge of the Local Self-Government Department, and circulated for eliciting public opinion thereon; but owing to the opposition of a certain group of members of the Council, the Bill could not be passed. Since then no serious attempt appears to have been made to bring forward another Bill although the necessity of amending the present Act was emphasised on more than one occasion by those interested in the administration of urban Bengal. The present Bill aims at removing certain defects and disabilities in the working of Act III of 1884 which has practically become out of date. Alterations have been suggested and insertion of certain new provisions proposed without sacrificing the principle on which the present Act is based. With the growth of civic consciousness among the people, it has become imperative to bring the law into line with modern requirements. The amendments proposed are calculated to obviate some of the difficulties in the administration of municipalities in this Province and will, I hope, meet with universal approval.

2. Section 20 of the Act provides for the removal of Commissioners by the Commissioner of the Division on certain grounds. But there is no provision whereby a Municipal Commissioner can be removed for default in the payment of the taxes due from him. A new clause has, therefore, been inserted to make good this omission.

3. A proviso has been added to section 26 empowering the Local Government to appoint a new body of Commissioners to carry on administration in the event of the elected Commissioners of a municipality being unseated by an order of a competent Court of law. In this connection a reference is invited to Case No. 802 of 1925 (Bhubanmohan Basak and others *versus* Chairman of Dacca Municipality) in the Court of Babu Panna Lal Bose, Munsiff, Fourth Court, Dacca.

4. Section 26A lays down that the Chairman and Vice-Chairman of every municipality shall resign office at the first effective meeting of the reconstituted body of Commissioners before a new Chairman and a Vice-Chairman are elected. This gives rise to complications in cases where the Chairman and Vice-Chairman fail to submit their resignations. The election of Chairman and Vice-Chairman of the Municipality of Dacca on August 9, 1930, is an instance in point. Provision has, therefore, been made that if the Chairman and Vice-Chairman fail to resign, they shall be deemed to have automatically vacated their respective offices.

5. Owing to an abnormal increase in motor traffic in recent years, it has become difficult for the local bodies to maintain their roads in proper condition. The existing laws do not empower the municipalities to levy any tax upon motor cars, bicycles, etc. Taxation of such vehicles has been proposed in the Bill by amending sections 86 and 131 of the Bengal Municipal Act.

6. Sometimes it is found that some portion of a holding, which has been exempted from assessment under section 98, is used for purpose other than those for which remission of taxes was granted. It is, therefore, proposed to so amend it as to make only those holdings eligible for assessment which are used for charitable purposes.

7. Section 103 is proposed to be amended so as to avoid any dispute which may arise at the time of the general reassessment of holdings. (*Vide* Privy Council case Bhubanmohan Basak *versus* Chairman, Dacca Municipality, 33 Calcutta Weekly Notes, page 1039.)

8. To make section 105 consistent with section 121, an amendment of the former is suggested. This will remove the difficulty in realising taxes particularly from the female owner of a rented holding whose whereabouts are unknown and whose movable property is not sufficient to cover the taxes due.

9. In certain municipalities there are old and dilapidated buildings, the owners whereof are unable to repair or rebuild them owing to poverty. In some cases, the owner is compelled to dismantle the whole or part of the building to avoid accidents. Section 107 is proposed to be so amended as to make reduction or remission of taxes possible in such circumstances.

10. To make provision for the amalgamation and the splitting up of holdings, an amendment to section 108 is suggested. The Government circular on the subject prohibits separation of taxes until another reassessment.

11. Sometimes it so happens that a holding is disposed of by its owner without payment of the taxes due from him under section 109. The arrear taxes cannot also be realised from the purchaser. The municipality has thus no other option than to write off the arrear taxes. In order to avoid this difficulty, the amendment of the section is considered necessary.

12. Section 113 is proposed to be amended, so that no ratepayer may apply for review of his application under section 106. But provision has been made for appeal against an order under section 107.

13. To simplify the work of the Collection Department, amendment of section 120 is proposed in order to legalise the service of the notice of demand for two or more quarters in one bill.

14. The period of three months for execution of distress warrant as laid down in section 121 is too short, it is proposed to be increased to six months for facility of collection work.

15. Under Form C of the Fourth Schedule, a collecting sarkar cannot realise any warrant fees if the amount is paid before the actual seizure of articles. A penalty should be imposed if once distress warrant is issued, otherwise no useful purpose is served by the issue of such warrant.

16. By amending section 129, it is intended to make the arrear municipal taxes the first charge upon the holding for which the taxes are due. The absence of any such provision sometimes causes great financial loss to a municipality if the holding is mortgaged and is put up to auction sale by the creditor. In such circumstances, the municipal taxes are to be written off as irrecoverable.

17. The amendment of section 131 has reference to that of section 86. The question has been dealt with in paragraph 5.

18. The amendment of the Fifth Schedule is suggested in conformity with the amendment of sections 86 and 131.

19. The amendment of section 169 will make "taxes, rents or other municipal dues" realisable as in the case of tolls with the assistance of Police officers when required.

20—23. Sub-section (*3*) of section 279, sub-section (*1*) of section 322 and sections 323 and 324 are proposed to be amended so as to make the owner responsible for the collection of water and latrine rates from the occupier along with the rent of the holding, as under the proviso of the existing sections, the taxes cannot be recovered from the occupier if he vacates the holding suddenly.

In the proviso of section 322, the question of remission of privy tax in respect of shops having no privy is redundant, as section 321 fully empowers the Municipal Commissioners to realise privy tax with reference to the annual value of holdings containing dwelling houses or privies (*vide* page 1027 of the Calcutta Weekly Notes, Vol. 19). The deletion of the proviso is, therefore, suggested.

24. Difficulties are often experienced in realising taxes by civil suits which involve delay. By amending section 361, the municipality will have the power to recover promptly the arrears of taxes without taking recourse to civil suits.

SATYENDRA KUMAR DAS,

The 5th January, 1931. *Member-in-charge.*

J. BARTLEY,

Secy. to the Bengal Legis. Council.

GOVERNMENT OF BENGAL.

Legislative Department.

NOTIFICATION.

No. 2480L.—6th August, 1931.—It is hereby notified for general information that at the meeting of the Bengal Legislative Council held on the 24th July, 1931, a motion was carried that the Bengal Municipal (Amendment) Bill, 1931, by Babu Satyendra Kumar Das, M.L.C., be circulated for the purpose of eliciting opinion thereon before the 1st November, 1931. Expressions of opinion by public bodies or by individuals interested in the said Bill which is published together with its Statement of Objects and Reasons in this Gazette should be sent so as to reach the undersigned before that date.

J. BARTLEY,

Secy. to the Bengal Legis. Council.

Registered No. C207 *No. 33 of 1931*

The Calcutta Gazette

THURSDAY, AUGUST 13, 1931.

CONTENTS:

	PAGE.
First Forecast of the Cotton Crops of Bengal, 1931-32 .. .	1033
Abstract of receipts and charges of the Stamp Department in Bengal for the year ending the 31st March 1931 ..	1034
Vital Statistics for the towns of Bengal for the week ending 1st August 1931 ..	1035
Corporation of Calcutta Notices ..	1036
Weather and Crop Report for the week ending 5th August 1931	1037—1040
Prices-current (wholesale) of certain articles in the Calcutta Mart and (retail) of common rice and salt in the districts of Bengal for the second-half of July 1931	1041—1044
Statement showing the daily gauge-readings of certain rivers for the week ending 30th July 1931	1045—1051
Statement under the Cotton Ginning and Pressing Factories Act, 1925 ..	1052
Statements of weekly gauge readings of certain rivers in Bengal	1053—1054

Supplement.

Official Papers.

DEPARTMENT OF AGRICULTURE, BENGAL.

Dacca, the 4th August 1931.

First Forecast of the cotton crops of Bengal, 1931-32.

(NOTE.—On an average of the five years ending 1929-30, the area under the cotton crops in Bengal has represented some 0·2 per cent. of the total area under cotton in India.)

There are two crops, early and late. The "early" crop is chiefly grown in the Chittagong Hill Tracts and in the Tripura State and to a small extent in other districts. The "late" crop is grown in Bankura and Midnapore. As the late crop has not yet been sown, this forecast deals only with the early crop.

Character of the season.—In Bankura, Mymensingh and the Tripura State the weather was not favourable at sowing time for insufficient rainfall. In Mymensingh and the Tripura State subsequent conditions were not favourable for germination and growth owing to heavy rain in the former and to insufficient rain in the latter. In the Chittagong Hill Tracts, also, the growth was hampered owing to the fact that the paddy plants have outgrown the cotton plants. The state of the crop at present is not favourable, on the whole.

Area sown.—The area sown is reported to be 74,312 acres this year as against 76,812 acres reported in the corresponding forecast of last year, since revised to 76,207 acres. The decrease in area is reported to be due to slump in the market.

R. S. FINLOW,

Director of Agriculture, Bengal.

FINANCE DEPARTMENT.

Separate Revenue.

NOTIFICATION.

No. 528 S.R.—7th August 1931.—The following abstract and statement of receipts and charges of the Stamp Department in Bengal for the year 1930-31 are published for general information :—

E. N. BLANDY,

Secy. to the Govt. of Bengal.

STATEMENT I—Abstract of receipts and charges for the year ending the 31st March 1931.

1	Receipts.	Charges.						Net receipts.
		Discount and establishment for sale of stamps.	Refunds.	Cost of stamps supplied from Central Stamp Store.	Cost of general supervision.	Other charges.	Total.	
	2	3	4	5	6	7	8	9
	Rs.	Rs.	Rs.	Rs.	Rs.	Rs.	Rs.	Rs.
Under the Stamp Act ..	90,14,368	1,57,674	6,43,143	74,833	Nil	42,150	9,17,800	80,96,568
Under the Court Fees Act ..	2,31,35,922	1,38,799	2,12,802	88,070	Nil	21,075	4,60,746	2,26,75,176
Total ..	(a) 3,21,50,290	2,96,473	8,55,945	1,62,903	Nil	63,225	13,78,546	3,07,71,744
Total for 1929-30 ..	(b) 4,00,97,779	3,78,036	9,00,213	1,82,568	Nil	59,112	15,19,929	3,85,77,850

(a) Includes Rs. 5,03,440 paid to the Calcutta Improvement Trust on account of excess stamp duty realised from several districts and Rs. 11,30,000 being the provincial share of sale-proceeds of unified stamps credited to non-postal revenues and also Rs. 45,000 paid to the Government of Assam as annual assignment on account of stamp duty paid in Bengal in respect of non-judicial stamps on documents relating to property or transactions in Assam.

(b) Includes Rs. 5,25,865 paid to the Calcutta Improvement Trust on account of excess stamp duty realised from several districts and Rs. 11,30,000 being the provincial share of sale-proceeds of unified stamps credited to non-postal revenues and also Rs. 45,000 paid to the Government of Assam as annual assignment on account of stamp duty paid in Bengal in respect of non-judicial stamps on documents relating to property or transactions in Assam.

Statement of receipts on account of duty on Probates, Letters of Administration, Certificates and Extended Certificates under Act XXVII of 1860 and Act VII of 1889 during the year ending the 31st March 1931.

	Rs.
Probates, etc., granted by the High Court ..	14,37,966
Probates, etc., granted by the subordinate Civil Courts ..	2,55,808
Total ..	(c)16,93,774
Total for 1929-30	(c)73,34,846

(c) The amounts are included in the receipts under the head " Court Fee Stamps " in column 2 of the above Abstract.

Vital statistics of towns with a population of 50,000 and over of the Bengal Presidency for the week ending Saturday, the 1st August 1931.

District.	No.	Towns.	Population under registration according to Census of 1921.			Births registered.		Deaths registered.																						
			Male.	Female.	Total	Number registered (excluding still-births).	Still-births registered.	Cholera.	Small-pox.	Plague.	Malaria.	Enteric fever.	Measles	Relapsing fever.	Kala-azar.	Other fevers.	Dysentery.	Diarrhœa.	Influenza.	Pneumonia.	Phthisis.	Other respiratory diseases.	Injuries including suicide.	Deaths from child-birth.	Other causes.	Total of all causes.			Total of corresponding week of the previous year.		
																									Male.	Female.	Total.	Male.	Female.	Total.
Calcutta ..	1	Calcutta ..	724,248	353,016	1,077,264	460	37	10	..	..	14	15	1	..	3	28	46	11	19	31	46	67	20	..	255	322	244	566	311	223	534
Burdwan ..	2	Asansol Mining Settlement.	176,814	152,539	329,353	265	2	5	..	..	5	1	..	..	..	58	9	1	..	15	1	2	7	..	79	103	80	183	73	68	141
Howrah ..	3	Howrah ..	128,472	66,829	195,301	96	10	5	3	..	3	5	..	..	..	4	8	4	..	10	7	12	2	1	25	49	40	89	51	45	96
Dacca ..	4	Dacca ..	67,333	52,117	119,450	59	3	..	..	..	..	1	..	..	5	3	7	1	..	11	1	6	5	..	13	38	20	53	28	16	44
24-Parganas	5	Bhatpara ..	45,723	19,886	65,609	28	..	..	5	..	..	..	..	..	..	6	2	..	1	3	..	..	1	..	2	12	8	20	8	5	13
	6	Titagarh ..	36,533	15,918	52,451	11	1	1	..	.	..	..	..	..	..	11	1	1	..	1	1	..	..	..	..	6	8	16	13	8	21

R. B. KHAMBATA, M.R.C.S. (ENG.), L.R.C.P. (LOND.), D.P.H. (CAMB.), *Director of Public Health, Bengal (offg.).*

CALCUTTA, *the 7th August 1931*

CORPORATION OF CALCUTTA.

NOTICES.

Central Municipal Office, 5th August 1931.

It is hereby notified for general information that the Corporation of Calcutta under powers vested in them in this behalf have, by a resolution dated the 22nd July 1931, sanctioned the modification of the alignment of a portion of Shampuker Street near its junction with Ananda Lane in Ward No. I which was originally sanctioned on the 2nd February 1911 by the General Committee of the Corporation as constituted under Act III (B.C.) of 1899.

A copy of the plan prepared in this behalf may be seen in the office of the Surveyor and Valuer of the Corporation any day between 11 a.m. and 3 p.m. on payment of usual fees.

It is hereby notified for general information that the Corporation of Calcutta under powers vested in them in this behalf have, by a resolution dated the 22nd July 1931, prescribed the alignment of Jadav Lane in Ward No. 22 to a width of 16 feet.

A copy of the plan prepared in this behalf may be seen in the office of the Surveyor and Valuer of the Corporation any day between 11 a.m. and 3 p.m. on payment of usual fees.

It is hereby notified for general information that the Corporation of Calcutta under powers vested in them in this behalf have, by a resolution dated the 22nd July 1931, prescribed the alignment of a 30 feet projected public street between Rupchand Mukherji Lane and Kalighat Road in continuation of the sanctioned alignment of same width connecting Russa Road with Rupchand Mukherji Lane in Ward No. 22.

A copy of the plan prepared in this behalf may be seen in the office of the Surveyor and Valuer of the Corporation any day between 11 a.m. and 3 p.m. on payment of usual fees.

The 6th August 1931.

It is hereby notified for general information that the Corporation of Calcutta under powers vested in them in this behalf have, by a resolution dated the 22nd July 1931, abandoned the alignment of a 30 feet projected public street connecting Rupchand Mukherji Lane with Rani Sankari Lane through premises No. 42, Rupchand Mukherji Lane in Ward No. 22.

A copy of the plan prepared in this behalf may be seen in the office of the Surveyor and Valuer of the Corporation any day between 11 a.m. and 3 p.m. on payment of usual fees.

J. C. MUKERJEA,

Chief Executive Officer.

DISTRICT REPORTS ON WEATHER AND CROPS.

For the week ending on the 5th August 1931.

Summary.—During the week light to moderate rain fell in North and East Bengal, while elsewhere the fall was only light. Transplantation of winter paddy seedlings continues but more rain is needed in parts of West Bengal districts, while in East and North Bengal excessive rain is retarding the operation in places. Harvesting of jute and autumn paddy is progressing in Eastern Bengal districts where the crops are reported to have been damaged to some extent in places by the sudden rise of flood water. Distress continues in parts of Nadia, Murshidabad and Bogra, the number of persons attending the test relief works in the different centres of these districts being 1,712, 3,109, and 122 respectively. In Dinajpur relief works have been closed for rains. The number of persons gratuitously relieved was 183 in Murshidabad. In several circles of Nadia gratuitous relief is also being given. The average price of common rice for the province has risen by about 1·21 per cent. as compared with that of the previous week.

Serial No.	District and subdivision.	Rainfall.	Price of common rice, in seers, per rupee.		Character of the weather, condition of crops, etc.
			This week.	Previous week.	
1	2	3	4	5	6
		Inches.			
1	24-Parganas ..	0·21	9½	10	Weather seasonable. Fodder and water are sufficient. Condition of jute plants is healthy except in Barrackpore where it is unsatisfactory. Damage reported from Barrackpore owing to drought; elsewhere no damage. Height of jute plants is 7½ feet in Barrackpore, 10½ feet in Baraset, 7 feet in Basirhat and 6 feet in Diamond Harbour subdivisions. Steeping water is ample except in Barrackpore and Diamond Harbour. No record of river level. Harvesting has commenced in some parts of Barrackpore and Basirhat subdivisions.
	Diamond Harbour.	0·40	10½	10½	
	Barrackpore ..	0·43	8½	8½	
	Baraset ..	0·86	9	9	
	Basirhat ..	0·46	9	9	
2	Nadia ..	0·47	9½	9½	Weather sultry. 1,712 persons attended test works during the week ending on the 1st August. Gratuitous relief being given from several circles in Kushtia subdivision. Condition of jute plants is fair. No damage. Steeping water is sufficient except in Meherpur subdivision. Height of river is the same as last year. Harvesting of jute has not yet commenced.
	Kushtia ..	2·19	10	10	
	Meherpur ..	0·60	8 13/16	8 13/16	
	Chuadanga ..	1·95	10	10	
	Ranaghat ..	0·88	10	10	
3	Murshidabad ..	1·30	11	11	Weather seasonable. Prospects of crops are fair. Fodder and water are sufficient. Cattle-disease is reported from thanas Suti, Sagardighi and Raghunathganj in Jangipur subdivision. 3,109 persons attended test works in Jellingi police-station during the week ending on the 1st August. 18 maunds 1 seer and 14 chittacks of rice were distributed among 30 men, 126 women and 27 children and 31 maunds of paddy worth Rs. 66-13-6 were given to 31 women for paddy husking. Condition of jute is healthy. No damage. Steeping water is sufficient. Height of jute plant is 3 to 6 feet. Height of rivers is normal. Rainfall moderate. Harvesting of jute has not yet commenced.
	Lalbagh ..	2·70	10½	10½	
	Jangipur ..	3·61	10½	10½	
	Kandi ..	2·04	12	12	
4	Jessore ..	2·32	9	9	Weather seasonable. Prospects of standing crops are good. Jute plants are healthy. No damage. Steeping water is sufficient. Height of rivers is lower than last year. Harvesting of jute has not commenced. Fodder and water are sufficient.
	Jhenidah ..	0·31	10	10	
	Magura ..	2·91	10	9	
	Narail ..	2·60	9½	(*n*)	
	Bongaon ..	5·00	9½	9½	
5	Khulna ..	3·26	10½	10½	Weather hot and occasionally rainy; its effects on crops are fair. Fodder and water are sufficient. Export and import of rice continue slowly. Cattle-disease is reported from Kaliganj, Syamnagore and Fakirhat thanas. Growth of jute is good. No damage. Steeping water is sufficient. Height of jute plants is 5 feet. Rainfall is moderate. Harvesting has commenced.
	Satkhira ..	1·88	9⅞	9½	
	Bagerhat ..	Nil	8½	8½	

(*n*)—Not reported.

Serial No.	District and subdivision.	Rainfall.	Price of common rice, in seers, per rupee.		Character of the weather, condition of crops, etc.
			This week.	Previous week.	
1	2	3	4	5	6
		Inches.			
6	Burdwan ..	0·93	10	10	Weather seasonable. Fodder and water are sufficient. Condition of jute plants is healthy. No damage. Steeping water is ample. Height of jute plant is 3½ feet. River level is normal. Rainfall is normal. Harvesting of jute has not commenced.
	Asansol ..	1·49	9	9	
	Katwa ..	3·10	11	11	
	Kalna ..	1·15	11	11	
7	Birbhum ..	1·53	13	13	Weather hot and cloudy. Fodder and water are sufficient.
	Rampurhat ..	1·64	11½	11½	
8	Bankura ..	1·46	11	11	Weather hot and cloudy. Prospects of standing crops are fair. Fodder and water are sufficient. Cattle-disease is reported from Gangajalghati police-station.
	Vishnupur ..	3·71	11 7/16	11¼	
9	Midnapore ..	3·70	13½	13½	Weather seasonable. Transplantation of paddy seedlings is progressing. Condition of jute is unsatisfactory.
	Contai ..	0·73	12	12	
	Tamluk ..	*nil*	10½	10	
	Ghatal ..	1·12	12½	12½	
	Jhargram ..	1·85	11¾	11¾	
10	Hooghly ..	0·35	9	9	Weather hot. More rain is needed. Fodder is sufficient. Growth of jute is satisfactory. No damage. Harvesting has not commenced. Steeping water is ample. Height of river is the same as last year.
	Serampore ..	0·48	9¾	9¾	
	Arambagh ..	0·59	12½	12½	
11	Howrah ..	0·28	8	8	Weather dry. Jute and paddy plants are suffering for want of adequate rain. No import or export. Fodder and water are sufficient. Jute plant is healthy. No damage. Steeping water is ample. Height of jute plants is 4 to 6 feet. Height of river is lower.
	Uluberia ..	0·20	10¾	9¾	
12	Rajshahi (Rampur-Boalia).	2·67	10½	10½	Weather seasonable. Jute crop is prospering. *Aus* paddy is damaged in Gurudaspur and Singra thanas by floods. Steeping water is sufficient. Height of jute plants is 4 to 5 cubits. Height of rivers is normal. Harvesting of jute is going on.
	Naogaon ..	1·92	10¾	12	
	Nator ..	2·87	9¾	9¾	
13	Dinajpur ..	3·81	10	10	Weather seasonable but cloudy; its effects on agricultural operations are favourable. Prospects of standing crops are fair. Fodder and water are sufficient. Cattle-disease is reported from Dhamoirhat police-station. Condition of jute plants is not so healthy. Growth is fair. No damage. Rainfall and steeping water are sufficient. Height of plants is 3 to 4 cubits. River level is higher. Harvesting has commenced. Relief works closed for rains.
	Thakurgaon ..	10·95	9	11	
	Balurghat ..	0·57	13	13	
14	Jalpaiguri ..	19·39	6½	7	Prospects of standing crops are unsatisfactory owing to heavy rain. Condition of jute is not hopeful. No damage. Steeping water is ample. Height of jute plants is 5 feet 8 inches to 7 feet 6 inches. Rainfall is sufficient. River overflown. Harvesting has commenced on small scale.
	Alipur ..	9·03	7	7	
15	Darjeeling ..	11·09	7	7	Marua and paddy are growing well. Potatoes and maize are being harvested. Fodder and water are sufficient. Cattle-disease exists at places. Condition of jute is not healthy. No damage. Steeping water is ample. Height of jute plants is about 8 feet. Rainfall is excessive. Harvesting of jute has begun.
	Kurseong ..	5·99	7	7	
	Siliguri ..	19·28	8½	8	
	Kalimpong ..	3·96	7	7	

Serial No.	District and subdivision.	Rainfall.	Price of common rice, in seers, per rupee.		Character of the weather, condition of crops, etc.
			This week.	Previous week.	
1	2	3	4	5	6
		Inches.			
16	Rangpur ..	0·88	9	9½	Weather cloudy, earthquake felt. The crops in the flooded areas in Gaibandha and Kurigram will be damaged if water remains stationary. Jute plants are fairly healthy. Harvesting is going on. Steeping water is sufficient. River level is higher than last year. Rainfall is excessive. Fodder and water are sufficient. None attended the test relief works.
	Nilphamari ..	4·38	11	11	
	Kurigram ..	4·33	10	11½	
	Gaibandha ..	3·44	9	9	
17	Bogra ..	5·53	10½	10½	Distress abated in the western part of the district. Jute and *aus* paddy are being harvested. Flood water in the eastern side is subsiding slowly. Eighty per cent. of jute with deteriorated fibre, fifty per cent. of deep water *aman* paddy and twenty-five per cent. of *aus* paddy are expected to be saved. Agricultural Department is trying to get one thousand maunds of paddy seed for the eastern side. Agricultural loan for Rs. 1,00,000 is urgently needed. Number of persons attending the test relief works amounts to 122. Number of persons gratuitously relieved is nil. Rainfall normal.
18	Pabna ..	3·85	9½	10	Export and import are normal. Condition of cattle is well. Fodder and water are sufficient. Growth of jute is fair. One anna damage done by flood. Steeping water is abundant. Height of jute plants is five and a half feet on an average. Rainfall is not excessive. *Padma* level is 3 feet lower and *Jamuna* level 6 inches higher than last year. Six annas crop is harvested.
	Sirajganj ..	1·94	10	11	
19	Malda ..	1·08	11	10½	Weather seasonable. Prospects of standing crops are good. Transplantation of paddy seedlings continues. Fodder and water are sufficient. Condition of jute plant is healthy. No damage. Steeping water is ample. Height of rivers is higher than last year. Rainfall is moderate. Harvesting has not commenced.
20	Cooch Behar ..	5·87	9⅛	11 7/16	Weather cloudy with occasional rains. Transplantation of *haimanti* seedlings and cutting, steeping and washing of jute are continuing. Prospects of standing crops are fair. No damage to jute. Steeping water is sufficient. One and half annas crop is harvested. Fodder is sufficient. Cattle-disease is reported from Sitalkhuchi police-station.
21	Dacca ..	2·30	9½	9½	Rainfall at North Sadar (Kapasia) 2·80. Weather seasonable. Condition of jute is fair. The crop has been damaged to some extent on account of sudden rush of water. Steeping water is sufficient. Height of jute is between 3½ and 6½ feet. Rainfall is normal. River level is much higher than last year. About 2 annas crop is harvested. Fodder and water are sufficient.
	Manikganj ..	4·05	8½	11	
	Narayanganj	1·13	10	10	
	Munshiganj ..	0·16	11	11	
22	Mymensingh ..	2·66	9	9	Weather almost seasonable. Prospects of standing crops are fair. Condition of jute is not satisfactory. The crop is damaged to the extent of about 20 per cent. Steeping water is ample. Height of jute plants is 4 to 6 cubits. River level is much higher than last year. Rainfall is excessive. Four annas crop is harvested. Fodder and water are adequate.
	Jamalpur ..	6·62	9½	10½	
	Tangail ..	1·00	9	10	
	Netrakona ..	3·84	10	10	
	Kishorganj ..	7·11	10	10⅝	

Serial No.	District and subdivision.	Rainfall.	Price of common rice, in seers, per rupee.		Character of the weather, condition of crops, etc.
			This week.	Previous week.	
1	2	3	4	5	6
		Inches.			
23	Faridpur ..	2·33	9½	9⅛	Weather occasionally rainy. Harvesting of *aus* paddy is proceeding. No large import or export. Fodder and water are sufficient. Growth of jute is not satisfactory in Sadar and Madaripur subdivisions but healthy and satisfactory elsewhere. Damage partially done by sudden flood. Steeping water is ample. Height of jute plants is 5 to 6 feet. River level not known. Rainfall is normal. Six annas crop is harvested.
	Goalundo (Rajbari).	3·16	9	9	
	Madaripur ..	0·43	11	10	
	Gopalganj (*a*)	0·81	8½	8½	
24	Bakarganj (Barisal).	1·61	9½	9½	Weather seasonable. Fodder and water are sufficient. Condition of jute is improving. No damage. Steeping water is ample. Height of plants is from 4 to 7 feet. River level is little below the normal but is gradually rising. Rainfall is a little less than last year. About three annas of lowland jute is harvested.
	Pirojpur ..	1·81	10½	10½	
	Patuakhali ..	5·98	10	10	
	Dakshin Shabazpur (Bhola).	2·40	9⅛	9⅛	
25	Chittagong ..	1·70	10 11*	10 11*	Weather seasonable. Prospects of standing *aus* crops fair. Transplantation of *aman* crop continues. Fodder and water are sufficient. *Panga* salt sells at 16 seers per rupee at Sadar and at 13 seers per rupee at Cox's Bazar.
	Cox's Bazar ..	4·11	10	10	
26	Tippera (Comilla).	1·94	10	10	Prospects of standing crops are fair. Seven annas jute crop is harvested.
	Brahmanbaria	1·19	10	10	
	Chandpur ..	1·72	9½	9½	
27	Noakhali ..	2·69	9	9	Weather seasonable. Condition of jute is fair. One-fourth of the jute crop is harvested.
	Feni ..	3·63	12	13	
28	Chittagong Hill Tracts.	1·40	12	14	Weather seasonable.
29	Tripura State ..	2·29	10	10	Weather seasonable. Fodder and water are sufficient. Condition of jute plants healthy. No damage. Steeping water ample. Height of plants 3 to 9½ feet. Rainfall is normal. Harvesting not commenced. Cattle-pox exists at Sabroom. Cleansed cotton sells at Rs. 6 to Rs. 13 per maund and jute at Rs. 2 to Rs. 5 per maund.

* Burma rice.

(*a*) The rainfall at Haridaspur, which is very near to Gopalganj, is not shown here.

DACCA, *the 8th August 1931.*

J. C. ROY, for *Director of Agriculture, Bengal.*

Wholesale prices-current of certain articles in the Calcutta mart of Bengal for the second half of July 1931.

Mart.	Wheat.			Raw cotton.		
	Present return.	Next preceding return.	Corresponding return of last year.	Present return.	Next preceding return.	Corresponding return of last year.
1	2	3	4	5	6	7
	Rs. A. P.	Rs. A. P.	Rs. A. P.	Rs. A. P.	Rs. A. P.	Rs. A. P.
Calcutta	3 0 0	2 13 0	4 4 0	18 0 0	18 0 0	18 4 0

Mart.	Coal.			Raw jute (weighted average).			*Gur* (sugarcane).		
	Present return.	Next preceding return.	Corresponding return of last year.	Present return.	Next preceding return.	Corresponding return of last year.	Present return.	Next preceding return.	Corresponding return of last year.
	8	9	10	11	12	13	14	15	16
	Rs. A. P.	Rs. A. P.	Rs. A. P.	Rs. A. P.	Rs. A. P	Rs. A. P.	Rs. A. P.	Rs. A. P.	Rs. A. P.
Calcutta	0 6 6	0 6 6	0 6 6	4 11 6	4 11 0	6 0 0	6 4 0	6 4 0	8 8 0

J. C. Roy, for *Director of Agriculture, Bengal.*

Dacca, *the 6th August 1931.*

Prices-current (retail) of common rice and salt in the districts of Bengal for the second half of July 1931.

Districts and Marts.	Quantity per rupee in seers of eighty tolas.								
	Common rice.						Salt.		
	Average.			Cheapest.					
	Present return.	Next preceding return.	Corresponding return of last year.	Present return.	Next preceding return.	Corresponding return of last year.	Present return.	Next preceding return.	Corresponding return of last year.
	S. Ch.	S. Ch.	S. Ch.	S. Ch.	S. Ch.	S. Ch.	S. Ch.	S. Ch.	S. Ch.
Presidency Division.									
24-Parganas—									
1 Chetla Hat ..	10 0	9 8	6 8	11 0	10 0	7 0	16 0	16 0	14 0
2 Mogra Hat ..	11 7	11 7	7 4	12 5	12 12	7 9	14 8	14 8	15 8
3 Calcutta-Beliaghata	7 4	7 4	5 5	9 6	9 6	6 10	13 0	13 0	10 8†
Nadia—									
4 Goari	9 8	9 8	6 8	10 0	10 0	7 8	13 8	13 8	13 8
5 Ranaghat ..	10 0	10 0	7 4	10 4	10 4	7 8	13 0* 16 0	13 0* 16 0	13 0* 16 0
Murshidabad—									
6 Berhampore ..	11 0	11 0	7 0	11 8	11 8	7 8	15 0	15 0	16 0
7 Kandi	12 0	12 0	7 4	12 8	12 8	7 8	16 0	16 0	15 0
8 Jangipur ..	10 0	10 0	7 0	10 8	10 4	7 4	16 0	16 0	16 0
Jessore—									
9 Sadar	9 0	9 0	7 0	11 0	11 0	8 0	16 0†	16 0* 16 0	15 0* 16 0
10 Bongaon ..	10 0	9 8	7 0	11 0	10 8	8 14	13 0* 16 0	13 0* 16 0	13 0* 16 0
Khulna—									
11 Sadar	11 0	11 0	6 0	12 0	12 8	6 8	16 0†	16 0†	14 8
12 Bagerhat ..	8 8	8 8	6 8	9 8	9 8	7 0	13 8	13 8	12 0
Burdwan Division.									
Burdwan—									
13 Sadar	8 15	9 0	8 0	11 0	11 0	9 0	16 0	16 0	16 0
14 Kalna	10 0	9 8	7 10	10 12	10 0	7 12	16 4	16 4	15 0
Birbhum—									
15 Suri	11 8	12 0	8 0	12 8	13 0	8 8	15 0	14 0	13 0
16 Rampurhat ..	11 8	12 8	8 0	12 0	13 0	8 8	16 0	16 0	16 0
Bankura—									
17 Sadar	11 0	12 0	7 8	13 0	13 0	8 0	14 0	16 0	15 0
18 Vishnupur ..	11 14	11 4	7 8	12 4	11 14	8 0	15 0	15 0	13 8

* Karkach.

N.B.—The prices of Karkach and Liverpool salt tally with each other in marts marked †.

Prices-current (retail) of common rice and salt in the districts of Bengal for the second half of July 1931.

Districts and Marts.	Quantity per rupee in seers of eighty tolas.								
	Common rice.						Salt.		
	Average.			Cheapest.					
	Present return.	Next preceding return.	Corresponding return of last year.	Present return.	Next preceding return.	Corresponding return of last year.	Present return.	Next preceding return.	Corresponding return of last year.
BURDWAN DIVISION—*concld.*	S. CH.	S. CH.	S. CH.	S. CH.	S. CH.	S. CH.	S. CH.	S. CH.	S. CH.
Midnapore—									
19 Sadar	13 12	13 12	7 12	15 2	14 4	8 4	18 0	18 0	8 0
20 Contai	12 0	12 0	7 8	13 0	13 0	8 8	13 0	16 0	11 8
Hooghly—									
21 Sadar	8 14	9 8	7 8	11 7	11 0	8 8	14 4	16 0	16 0
22 Arambagh ..	11 8	11 8	8 2	12 8	12 8	8 8	12 14* / 15 0	12 14* / 15 0	13 0* / 15 8
Howrah—									
23 Sadar	10 0	8 4	6 8	12 8	11 0	7 8	16 0	16 0	18 0
24 Uluberia ..	10 12	10 8	7 0	12 0	11 8	8 8	18 8	18 0	16 0
RAJSHAHI DIVISION.									
Rajshahi—									
25 Rampur-Boalia ..	9 8	9 12	6 12	10 8	10 10	7 8	12 0†	12 0†	12 0
26 Nator	9 12	9 6	6 0	10 8	10 8	6 6	12 0†	12 0†	12 0†
27 Dinajpur—Railway Hat	12 0	9 0	7 4	13 0	12 0	8 4	14 0	14 0	14 0
28 Jalpaiguri—Sadar ..	9 0	9 0	6 0	10 0	10 0	7 0	13 0	13 0	11 0†
Darjeeling—									
29 Sadar	9 0	9 0	6 0	10 0	10 0	7 4	6 0* / 10 0	6 0* / 10 0	6 0* / 10 0
30 Siliguri ..	7 4	7 8	5 0	9 4	9 8	7 0	9 0* / 13 0	9 0* / 13 0	11 0
Rangpur—									
31 Sadar	9 4	9 0	5 0	10 4	10 4	6 6	12 0†	12 0†	8 0†
32 Nilphamari ..	11 0	11 0	6 4	11 0	11 0	(a)	15 0†	15 0†	10 0†
33 Bogra—Sadar ..	10 8	10 14	7 0	11 0	11 4	7 8	15 0	15 0	12 0†
Pabna—									
34 Sadar	10 0	9 8	6 0	11 12	11 8	6 4	12 8	12 8	12 8*
35 Serajganj ..	11 4	11 8	6 0	12 8	12 12	7 4	15 0*	15 0*	12 0*
Malda—									
36 Sadar	10 0	10 0	7 4	10 4	11 0	8 8	14 0*	14 0*	14 0
37 Balia—Nawabganj	10 6	10 8	8 14	(a)	10 8	10 0	15 8	14 8	15 0

(a) Not available.

* Karkach.

N.B.—The prices of Karkach and Liverpool salt tally with each other in marts marked †.

Prices-current (retail) of common rice and salt in the districts of Bengal for the second half of July 1931.

Districts and Marts.	Quantity per rupee in seers of eighty tolas.								
	Common rice.						Salt.		
	Average.			Cheapest.					
	Present return.	Next preceding return.	Corresponding return of last year.	Present return.	Next preceding return.	Corresponding return of last year.	Present return.	Next preceding return.	Corresponding return of last year.
	S. Ch.	S. Ch.	S. Ch.	S. Ch.	S. Ch.	S. Ch.	S. Ch.	S. Ch.	S. Ch.
Dacca Division.									
Dacca—									
38 Sadar	9 0	8 12 (r)	5 14	10 8	10 0 (r)	6 8	15 0†	14 8* (r) / 15 0	10 8†
39 Mirkadim ..	11 0	11 0	(n)	11 8	11 8	(n)	14 0	15 0	(n)
Mymensingh—									
40 Nasirabad ..	9 0	9 0	5 14	11 0	10 0	6 2	12 0*	12 0*	12 0*
41 Netrakona ..	11 0	11 0	(n)	13 0	13 0	(n)	13 0* / 13 8	13 0* / 13 8	(n)
Faridpur—									
42 Sadar	9 12	9 8	6 0	10 12	10 8	6 8	12 0*	10 0*	11 0
43 Rajbari ..	9 0	9 0	6 0	10 8	10 8	7 0	12 0†	12 0†	12 0
Bakarganj—									
44 Barisal ..	9 8	9 0	5 13	10 8	10 0	6 0	16 0	16 0	14 0
45 Pirojpur ..	10 0	9 0	6 0	10 8	9 6	6 6	13 0†	12 0†	13 0
Chittagong Division.									
Tippera—									
46 Comilla ..	10 0	10 0	6 4	11 4	11 4	8 3	12 14	12 14	12 14
47 Chandpur ..	10 12	9 8	6 0	13 0	11 6	6 10	16 0	13 4	13 4
Noakhali—									
48 Kalitara Hat ..	9 0	9 0	5 8	10 0	10 0	5 12	13 0	13 0	13 0
49 Feni Hat ..	9 0	9 0	6 0	13 0	9 8	8 0	7 0* / 13 0	7 0* / 13 0	7 0* / 13 0
Chittagong—									
50 Sadar	10 0	10 0	7 8	10 8	12 8	8 8	18 0	18 0	16 8
51 Cox's Bazar ..	10 0	10 0	5 0	11 0	11 0	(a)	15 0	15 0	13 0
52 Chittagong Hill Tracts —Rangamati ..	12 0	12 0	7 0	13 0	13 0	7 8	5 8* / 12 0	5 8* / 12 0	5 8* / 12 0

(a) Not available. (r) Revised. (n) Not reported. * Karkach.

N.B.—The prices of Karkach and Liverpool salt tally with each other in marts marked †.

Dacca, *the 6th August 1931.*

J. C. Roy, for *Director of Agriculture, Bengal.*

Statement showing the daily gauge readings of certain rivers at the stations named below for the 24th July 1931.

Name of river and place where readings are taken.	Hour.	Reading on gauge	Value of zero referred to P. W. D. datum	Height above P. W. D. datum.	Compared with previous day's height.		Height above P. W. D. datum on same date in—	
					Rise.	Fall.	1930	1929.
Ganges .. Monghyr ..	6 a.m. ..	116·00′	0·00′	116 00′	1 70′	..	..	119·70′
Ganges .. Rajmahal ..	6 „ ..	76·15′	0·00′	76·15′	0·60′	..	79·80′	78·60′
Ganges .. Goalundo ..	8-54 „ ..	26·00′	1·409′	27·409′	0·20′	..	23·209′	25 909′
Bhagirathi .. Swarupganj ..	9 a m ..	16·58′	0·00′	16·58′	..	..	23·24′	19·62′
Brahmaputra .. Dibrugarh ..	8 a.m ..	38·70′	*302·70′	341·40′	1·40′	..	332·10′	335·06′
Brahmaputra .. Gauhati ..	....	26·00′	136·958′	162·958′	0·50′	.	150·858′	158·758′
Brahmaputra .. Serajganj ..	12-24 p m	40·30′	1·509′	41·809′	0·30′	..	35 709′	40·309′
Dhaleswari .. Sabhar ..	7 a.m. ..	21·70′	0·00′	21·70′	0·20′	..	18·10′	21·50′
Meghna .. Fenchuganj ..	7 a.m. ..	28·00′	1·509′	29·509′	0·05′	..	27·809′	..
Meghna .. Bhairab Bazar ..	6-24 „ ..	19·58′	1·61′	21·19′	0·25′	..	19·78′	20·40′
Meghna .. Chandpur ..	12-9 p m ..	10·58′	1·61′	12·19′	..	0·08′	11·53′	12·18′
Lakhya .. Narayanganj ..	7 a.m. ..	22·96′	—5·59′	17·37′	Steady		15·41′	17·24′
Madaripur Bil Route .. Takerhat ..	....	11·50′	0·00′	11·50′	Steady		10·75′	12·05′
Damodar .. Edilpur ..	6 a.m. ..	9·00′	92·58′	101·58′	.	0·08′	100·08′	107·08′

* Zero of gauge has been altered from 24th July 1931

Statement showing the daily gauge readings of certain rivers at the stations named below for the 25th July 1931.

Name of river and place where readings are taken.	Hour.	Reading on gauge.	Value of zero referred to P. W. D. datum.	Height above P.W.D. datum.	Compared with previous day's height.		Height above P. W. D. datum on same date in—	
					Rise.	Fall.	1930.	1929.
Ganges .. Monghyr	6 a.m.	118·50′	0·00′	118·50′	2·50′	..	119·80′	120·10′
Ganges .. Rajmahal	6 „	77·50′	0·00′	77·50	1·35′	..	79·70′	79·90′
Ganges .. Goalundo	8-54 „	26·20′	1·409′	27·609′	0·20′	..	23·309′	25·[illegible]09′
Bhagirathi .. Swarupganj	10 a.m.	17·89′	0·00′	17·89′	1·30′	..	23·36′	20·17′
Brahmaputra .. Dibrugarh	8 a.m.	38·70′	*302·70′	341·40′	1·40′	..	332·30′	334·76′
Brahmaputra .. Gauhati	....	26·80′	136·958′	163·758′	0·80′	..	151 658′	158·058′
Brahmaputra .. Sirajganj	12-24 p.m.	40·90′	1·509′	42·409′	0·60′	..	35·609′	40·209′
Dhaleswari .. Sabhar	7 a.m.	21·70′	0·00′	21·70′	0·20′	..	18·10′	21·40′
Meghna .. Fenchuganj	7 a.m.	28·05′	1·509′	29·559′	0·05′	..	27·709′	.
Meghna .. Bhairab Bazar	6-24 „	19·75′	1·61′	21·36′	0·17′	..	19·69′	20·19′
Meghna .. Chandpur	12-54 p.m.	10·42′	1·61′	12·03′	..	0·17	11·86′	12·86′
Lakhya .. Narayanganj	7 a.m.	23·00′	−5·59′	17·41′	0·04′	..	15·45′	.
Madaripur Bil Route .. Takerhat	....	11·55′	0·00′	11·55	0·05′	..	10·90	12·15′
Damodar .. Edilpur	6 a.m.	12·25′	92·58′	104·83′	3·25′	..	100·25′	104·75′

* Zero of gauge has been altered from 24th July 1931.

Statement showing the daily gauge readings of certain rivers at the stations named below for the 26th July 1931.

Name of river and place where readings are taken.	Hour.	Reading on gauge.	Value of zero referred to P. W. D. datum.	Height above P. W. D. datum.	Compared with previous day's height.		Height above P. W. D. datum on same date in—	
					Rise.	Fall.	1930.	1929.
Ganges .. Monghyr ..	6 a.m. ..	119·70′	0·00′	119·70′	1·20′	..	120·30′	120·70′
Ganges .. Rajmahal ..	6 „ ..	79·00′	0·00′	79·00′	1·50′	..	79·50′	79·50′
Ganges .. Goalundo ..	8-54 „ ..	26·70′	1·409′	28·109′	0·50′	..	23·509′	26·009′
Bhagirathi .. Swarupganj ..	10 a.m. ..	19·05′	0·00′	19·65′	1·16′	..	23·44′	20·49′
Brahmaputra .. Dibrugarh ..	8 a.m. ..	37·20′	*302·70′	339·90′	..	3·30′	333·30′	334·46′
Brahmaputra .. Gauhati ..	....	27·30′	136·958′	164·258′	0·50′	..	151 858′	157·758′
Brahmaputra .. Serajganj ..	12-24 p.m. ..	41·40′	1·509′	42·909′	0·50′	..	35·509′	40·009′
Dhaleswari .. Sabhar ..	7 a.m. ..	22·10′	0·00′	22·10′	0·30′	..	18·10′	21·40′
Meghna .. Fenchuganj ..	7 a.m. ..	28·10′	1·509′	29·609′	0·05′	..	27·609′	...
Meghna .. Bhairab Bazar ..	6-24 „ ..	19·50′	1·61′	21·11′	..	0·25′	19·61′	20·23′
Meghna .. Chandpur ..	1-44 p.m. ..	10·58′	1·61′	12·19′	0·17′	..	12·19′	12·94′
Lakhya .. Narayanganj ..	7 a.m. ..	23·12′	—5·59′	17·53′	0·12′	..	15·62′	17·18′
Madaripur Bil Route .. Takerhat ..	7-8 a.m. ..	11·65′	0·00′	11·65′	0·10′	..	11·00′	12·20′
Damodar .. Edilpur ..	6 a.m. ..	10·67′	92·58′	103·25′	..	1·58′	102·91′	104·45′

* Zero of gauge has been altered from 24th July 1931.

Statement showing the daily gauge readings of certain rivers at the stations named below for the 27th July 1931.

Name of river and place where readings are taken.	Hour.	Reading on gauge	Value of zero referred to P W D. datum.	Height above P W D datum.	Compared with previous day's height.		Height above P. W D datum on same date in—	
					Rise.	Fall.	1930	1929
Ganges .. hyr	6 a.m. ..	120·30′	0·00′	120·30′	0·60′	..	121·40′	121·70′
Ganges .. Rajmahal	6 „ ..	79·90′	0·00′	79·90′	0·90′	..	79·60′	79·90′
Ganges .. Goalundo	8-54 „ ..	27·40′	1·409′	28·809′	0·70′	..	23·409′	26·009′
Bhagirathi .. Swarupganj	10 a m. ..	20·20′	0·00′	20·20′	1·15′	..	23·48′	20·64′
Brahmaputra .. Dibrugarh	8 a.m. ..	36·20′	*302·70′	338·90′	..	1·00′	333·30′	334·46′
Brahmaputra .. Gauhati	....	27·90′	136·958′	164·858′	..	0·60′	152·058′	157·758′
Brahmaputra .. Serajganj	12-24 p m. ..	41·80′	1·509′	43·309′	0·40′	..	35·409′	39·909′
Dhaleswari .. Sabhar	7 a.m. ..	22·30′	0·00′	22·30′	0·20′	..	18·00′	21·30′
Meghna .. Fenchuganj	7 a.m. ..	28·15′	1·509′	29·659′	0·05′	..	27·459′	..
Meghna .. Bhairab Bazar	6-24 „ ..	19·75′	1·61′	21·36′	0·25′	..	19·61′	20·16′
Meghna .. Chandpur	2-39 p m ..	10·83′	1·61′	12·44′	0·25′	..	12·28′	12·94′
Lakhya .. Narayanganj	7 a m. ..	23·17′	−5·59′	17·58′	0·05′	..	15·66′	17·03′
Madaripur Bil Route .. Takerhat	7-8 p.m. ..	11·80′	0·00′	11·80′	0·15′	..	11·10′	12·30′
Damodar .. Edilpur	6 a m. ..	9·25′	92·58′	101·83′	..	1·42′	102·33′	104·95′

*Zero of gauge has been altered from 21th July 1931.

Statement showing the daily gauge readings of certain rivers at the stations named below for the 28th July 1931.

Name of river and place where readings are taken.	Hour.	Reading on gauge.	Value of zero referred to P.W.D. datum.	Height above P. W. D. datum.	Compared with previous day's height.		Height above P. W. D. datum on same date in—	
					Rise.	Fall.	1930.	1929.
Ganges .. Monghyr ..	6 a.m. ..	120·30′	0·00′	120·30′	Steady		122·00′	122·90′
Ganges .. Rajmahal ..	6 „ ..	80·65′	0·00′	80·65′	0·75′	..	83 30′	80·80′
Ganges .. Goalundo ..	8-54 „ ..	28·00′	1·409′	29·409′	0·60′	..	23·409′	25·909
Bhagirathi .. Swarupganj ..	10 a.m. ..	21·41′	0·00′	21·41′	1·21′	..	23·50′	21·24′
Brahmaputra .. Dibrugarh ..	8 a.m.	35·50′	*302·70′	338·20′	..	0·70′	334·20′	333·96′
Brahmaputra .. Gauhati ..	....	28·00′	136·958′	164·958′	0·10′	..	152·458′	157·258′
Brahmaputra .. Serajganj ..	12-24 p.m. ..	42·00′	1·509′	43·509′	0·20′	..	35·409′	39·809′
Dhaleswari .. Sabhar ..	7 a.m. ..	22·60′	0·00′	22·60′	0·30′	..	17·90′	21·30′
Meghna .. Fenchuganj ..	7 a.m. ..	28·35′	1·509′	29·859′	0·20′	..	27·309′	..
Meghna .. Bhairab Bazar ..	6-24 „ ..	20·50′	1·61′	22·11′	0·75′	..	19·61′	20·07′
Meghna .. Chandpur ..	3-54 p.m. ..	11 42′	1·61′	13·03′	0·58′	..	12·19′	12·86′
Lakhya .. Narayanganj ..	7 a.m. ..	23·67′	–5·59′	18·08′	0·50′	..	15·58′	16·91′
Madaripur Bil Route .. Takerhat ..	7-7 p.m. ..	12 00′	0·00′	12·00′	0·20′	..	11·10′	12·30′
Damodar .. Edilpur .	6 a.m. ..	6·67′	92·58′	99 25′	..	2·58	101·91′	106·33′

* Zero of gauge has been altered from 24th July 1931.

Statement showing the daily gauge readings of certain rivers at the stations named below for the 29th July 1931.

Name of river and place where readings are taken.	Hour.	Reading on gauge.	Value of zero referred to P. W. D. datum.	Height above P. W. D. datum.	Compared with previous day's height.		Height above P. W. D. datum on same date in—	
					Rise.	Fall.	1930.	1929.
Ganges .. Monghyr ..	6 a.m. ..	119·70′	0·00′	119·70′	..	0·60′	123·10′	122·30′
Ganges .. Rajmahal ..	6 „ ..	80·80′	0·00′	80·80′	0·15′	..	80·70′	81·30′
Ganges .. Goalundo ..	8-54 „ ..	28·50′	1·409′	29·909′	0·50′	..	23·409′	26·109′
Bhagirathi .. Swarupganj ...	6 p m. ..	21·94′	0·00	21·94′	0·53′	..	23·54′	21·90′
Brahmaputra .. Dibrugarh ..	8 a.m. ..	35·30′	*302·70′	338·00′	..	0·20′	334·00′	333·86′
Brahmaputra .. Gauhati ..	....	28·30′	136·958′	165·258′	0·30′	..	153·458′	156·658′
Brahmaputra .. Serajganj ..	12-24 p m. ..	42·20′	1·509′	43·709′	0·20′	..	35 509′	39·709′
Dhaleswari .. Sabhar ..	7 a.m. ..	23·10′	0·00′	23·10′	0·50′	..	17·80′	21·20′
Meghna .. Fenchuganj ..	7 a.m. ..	28·45′	1·509′	29·959′	0·10′	..	27·159′	..
Meghna .. Bhairab Bazar ..	6-24 „ ..	20·75′	1·61′	22·36′	0·25′	..	19·53′	19·90′
Meghna .. Chandpur ..	4-54 p m. ..	11·50′	1·61′	13·11′	0·08′	..	11·94′	12·86′
Lakhya .. Narayanganj ..	7 a.m. ..	24 08′	−5·59′	18 49′	0·41′	..	15 49′	16 91′
Madaripur Bil Route .. Takerhat ..	7-7 p m. ..	12 30′	0·00′	12·30′	0 30′	..	11 10′	12·30′
Damodar .. Edilpur ..	6 a.m. ..	6·37′	92·58′	98·95′	..	0·30′	103 08	104·83′

* Zero of gauge has been altered from 24th July 1931.

Statement showing the daily gauge readings of certain rivers at the stations named below for the 30th July 1931.

Name of river and place where readings are taken.	Hour.	Reading on gauge.	Value of zero referred to P. W. D. datum.	Height above P. W. D. datum.	Compared with previous day's height.		Height above P. W. D. datum on same date in—	
					Rise.	Fall.	1930.	1929.
Ganges .. Monghyr ..	6 a.m. ..	119·20′	0·00′	119·20′	..	0·50′	124·00′	121·80′
Ganges .. Rajmahal ..	6 ,, ..	80·75′	0·00′	80·75′	..	0·05′	81·50′	81·10′
Ganges .. Goalundo ..	....	29·00′	1·409′	30·409′	0·50′	..	23·409′	26·209′
Bhagirathi .. Swarupganj ..	6 p. m. ..	22·70′	0·00′	22·70′	0·76′	..	23·67′	22·71′
Brahmaputra .. Dibrugarh ..	8 a.m. ..	35·30′	*302·70′	338·00′	Steady		334·70′	333·76′
Brahmaputra .. Gauhati ..	....	28·20′	136·958′	165·158′	..	0·10′	154·458′	156·358′
Brahmaputra .. Serajganj ..	12-24 p. m. ..	42·40′	1·509′	43·909′	0·20′	..	35·709′	39·509′
Dhaleswari .. Sabhar ..	7 a.m. ..	23·70′	0·00′	23·70′	0·60′	..	17·70′	21·20′
Meghna .. Fenchuganj ..	7 a.m. ..	28·50′	1·509′	30·009′	0·05′	..	27·109′	..
Meghna .. Bhairab Bazar ..	6-24 ,, ..	21·08′	1·61′	22·69′	0·33′	..	19·53′	19·65′
Meghna .. Chandpur ..	5-54 ,, ..	11·50′	1·61′	13·11′	Steady		11·78′	12·78′
Lakhya .. Narayanganj ..	7 a.m. ..	24·46′	—5·59′	18·87′	0·38′	..	15·49′	16·87′
Madaripur Bil Route .. Takerhat ..	7-6 p.m. ..	12·70′	0·00′	12·70′	0·40′	..	11·10′	12·35′
Damodar .. Edilpur ..	6 a.m. ..	8·67′	92·58′	101·25′	2·30′	..	100·33′	108·25′

*Zero of gauge has been altered from 24th July 1931.

FORM C—BENGAL.

STATEMENT OF COTTON PRESSED IN THE BENGAL PRESIDENCY FOR THE WEEK ENDING 31st JULY 1931.

[Section 5 (2) of the Cotton Ginning and Pressing Factories Act, 1925.]

Name of Division or block.	Number of bales pressed.				District included in the block.
	During the week.	During the corresponding week, last year.	Since 1st September 1930 (the date prescribed by the Local Government as the commencement of the season).	During the corresponding period, last year.	
The Bengal Presidency	514 or 510·42 bales of 400 lbs. each.	484	33,048	31,917	All districts in the Presidency.

J. B. McBRIDE,

Chief Inspector of Factories, Bengal (offg.).

Statement showing the gauge readings at Dacca Waterworks on the river Buriganga for the week ending 1st August 1931.

Date.	At highest water.		At lowest water.		Commencement of—		Remarks.	
	Time.	Reading.	Time.	Reading.	Ebb tide.	Flow tide.	At 7 a.m.	At 5 p.m.
1931.								
26th July ..	Tide is not perceptible.						17·4	17·5
27th „ ..							17·7	17·8
28th „ ..							18·0	18·1
29th „ ..							18·35	18·45
30th „ ..							81·75	18·85
31st „ ..							19·1	19·25
1st August ..							19·6	19 75

B. M. on settling tank 30·49 O. M. S. L. Zero is at O. M. S. L.

Notable high and low water-levels of previous years.

		Taken at high tide.				Taken at low tide.
27th August	1906 ..	70·5		23rd February	1907 ..	51·06
5th September	1909 ..	66·86		13th „	1908 ..	51·06
10th August	1910 ..	69·86		12th March	1912 ..	51·06
1st „	1911 ..	68·46		6th „	1914 ..	50·60
13th „	1912 ..	67·16		22nd February	1915 ..	50·30
31st „	1915 ..	69·7		15th „	1916 ..	50·60
8th „	1916 ..	68·1		3rd March	1917 ..	51·0
12th „	1917 ..	67·1		21st February	1918 ..	51·40
13th „	1918 ..	69·12		26th „	1919 ..	50·4
2nd „	1919 ..	66·8		18th „	1920 ..	50·9
8th September	1920 ..	66·9		19th „	1921 ..	50·9
28th July	1921 ..	68·4		8th March	1922 ..	51·05
10th August	1922 ..	68·00		14th „	1923 ..	50·8
31st July	1923 ..	66·15		16th February	1924 ..	50·50
29th August	1924 ..	68·82		5th March	1925 ..	50·9
8th September	1925 ..	68·52		9th February	1926 ..	2·2
15th August	1926 ..	19·6		27th „	1927 ..	2·10
17th September	1927 ..	18·70		16th „	1928 ..	2·2
22nd August	1928 ..	20·0		21st „	1929 ..	2·0
13th July	1929 ..	17·8		24th „	1930 ..	2·3
12th September	1930 ..	18·65				

N. B.—Zero of the gauge at Dacca Waterworks prior to 11 a.m. on the 8th January 1926= −48·51 with reference to P. W. D. datum.

Zero of the gauge at Dacca Waterworks since 11 a.m. on the 8th January 1926=0·00 with reference to P. W. D. datum.

W. R. ROBSON, *Executive Engineer,*
Khulna Division.

KHULNA, *the 8th August 1931.*

Statement of weekly gauge readings on the river Ganges at Rampur Boalia for the week ending the 1st August 1931.

Date.	Hour.	Height of surface above zero of gauge.	Height of surface above P. W. D. datum.	Height of surface above P. W. D. datum on the same date of last year.	Remarks.
1931.					
26th July ..	7 a.m.	....	53·65	55·00	Value of zero = 0·00 P. W. D.
27th „ ..	7 „	....	54·90	54·90	
28th „ ..	7 „	....	55·75	55·10	Zero of gauge referred to B. M. on Rajshahi College step ; value 64·73.
29th „ ..	7 „	....	56·30	55·70	
30th „ ..	7 „	....	56·45	56·45	
31st „ ..	7 „	....	56·55	57·20	
1st August ..	7 „	....	56·50	57·70	

Highest recorded level on 26-8-1879=64·24.

Lowest recorded level on 25-4-1884=32·62.

P. C. Basu, *Subdivisional Officer,*
Irrigation Department, Rajshahi.

Rampur Boalia, *the 1st August 1931.*

Printed at the Bengal Government Press, Alipore, and published by the Bengal Secretariat Book Depot, Writers' Buildings, in the City of Calcutta, on the 13th August 1931.

Registered No. C207

The Calcutta Gazette

Extraordinary

SATURDAY, AUGUST 15, 1931.

GOVERNMENT OF BENGAL.

Appointment Department.

NOTIFICATION.

No. 7266A.—15th August 1931.—A temporary vacancy having occurred in the office of a Member of the Executive Council of the Governor of Bengal by the departure on special duty of the Hon'ble Sir Provash Chunder Mitter, Kt., C.I.E., the Governor in Council has been pleased to appoint, under the provisions of sub-section (*3*) of section 92 of the Government of India Act, Mr. Bepin Behari Ghose, M.A., B.L., to be a temporary Member of the said Council.

The Hon'ble Mr. Bepin Behari Ghose has, on the afternoon of this day, taken upon himself the execution of his office.

R. N. REID,
Chief Secy. to the Govt. of Bengal (offg.).

Printed at the Bengal Government Press, Alipore, and published by the Bengal Secretariat Book Depot, Writers' Buildings, in the City of Calcutta, on the 15th August 1931.

Registered No. C207 *No. 34 of 1931*

The Calcutta Gazette

THURSDAY, AUGUST 20, 1931.

CONTENTS:

	PAGE.
PART I.—Orders and Notifications by the Governor of Bengal, the Government of Bengal, the High Court, Government Treasury, etc.	967—991
PART IA.—Orders and Notifications by the Government of India republished for general information	227—228
PART IB.—Educational Notices ..	875—882
PART II.—Advertisements	719—734
PART III.—Acts of the Bengal Legislative Council	*Nil*
PART IV.—Bills introduced in the Bengal Legislative Council, Reports of Select Committees presented or to be presented to that Council, and Bills published before introduction in that Council ..	*Nil*
PART V.—Acts of the Indian Legislature assented to by the Governor General and Ordinances promulgated under section 72 of the Government of India Act ..	*Nil*
PART VI.—Bills introduced in the Council of State and Legislative Assembly, Reports of Select Committees presented to the Council and Assembly and Bills published under Rule 18 of the Indian Legislative Rules	*Nil*
SUPPLEMENT No. 34—	
First Forecast of the Sugarcane Crop of Bengal, 1931-32	1055—1056
Weekly Vital Statistics—Monthly Weather and Crop Report—Weekly Weather and Crop Report—Daily gauge-readings—Cotton Ginning and Pressing—Price-list of staple food-crops—Irrigation area leased—Weekly gauge-readings—Calcutta Improvement Trust Notice	1057—1077

Part I

Orders and Notifications by the Governor of Bengal, the Government of Bengal, the High Court, Government Treasury, etc.

ORDERS BY THE GOVERNMENT OF BENGAL.

No. 7411A.

Appointments and Transfers.

GENERAL.

Chittagong-Jalpaiguri. — No. 7268A.—14th August 1931.—Babu Tarak Nath Basu, Second Additional Subordinate Judge and Assistant Sessions Judge, Chittagong, is appointed temporarily to act as Additional District and Sessions Judge, Jalpaiguri.

POLICE.

Rajshahi-Khulna. — No. 7251A. — 14th August 1931.—Mr. Hari Sadhan Ghosh Chaudhuri, Probationary Assistant Superintendent of Police, Rajshahi, is posted temporarily to the headquarters station of the Khulna district.

Hooghly.—No. 7280A.—15th August 1931.—Babu Surendra Nath Sen, officiating Deputy Superintendent of Police, Hooghly, is appointed temporarily to act as Superintendent of Police of that district, during the absence, on leave, of Rai Shib Charan Das Mehta Bahadur, or until further orders.

Leave.

GENERAL.

No. 7057A.—7th August 1931.—Mr. Mahim Chandra Ghosh, I.C.S., has been granted by the High Commissioner for India an extension of leave on half average pay for nine months.

Hooghly.—No. 7146A.—11th August 1931. —Babu Nirodbaran Bhattacharji, Sub-Deputy Collector, Hooghly, is allowed leave on average pay for six months, under the proviso to rule 81 (*b*) (*ii*) of the Fundamental Rules, with effect from the 15th June 1931.

Birbhum.—No. 7212A.—13th August 1931. —Babu Bimala Kanta Sarkar, Sub-Deputy Collector, Rampurhat, Birbhum, is allowed leave on half average pay for one year, under rule 81 (*d*) of the Fundamental Rules, with effect from the 15th September 1931, or any subsequent date on which he may be relieved.

No. 7259A.—13th August 1931. — Rai Suresh Chandra Sinha Bahadur, Deputy Magistrate and Deputy Collector, is allowed leave on half average pay up to the 6th September 1931, under rule 81 (*d*) of the Fundamental Rules, in extension of the leave granted to him under the orders of the 17th June 1931.

Bankura.—No. 7262A.—14th August 1931. —Rai Sahib Shashi Bhusan Bhattacharji, Deputy Magistrate and Deputy Collector, Bankura, was on leave on average pay for two days, under rule 81 (*b*) (*ii*) of the Fundamental Rules, in extension of the leave granted to him under the orders of the 26th June 1931.

No. 7273A.—14th August 1931.—Babu Anil Chandra Basu, Deputy Magistrate and Deputy Collector, is allowed leave on average pay for two weeks, under rule 81 (*b*) (*ii*) of the Fundamental Rules, with effect from the 26th July 1931.

Jessore.—No. 7275A.—14th August 1931.— Babu Abinash Chandra Banarji, Deputy Magistrate and Deputy Collector, Jessore, is allowed leave on average pay for three months and six days, under the proviso to rule 81 (*b*) (*ii*) of the Fundemental Rules, with effect from the 9th July 1931.

POLICE.

No. 7055A.—7th August 1931.—Mr. C. G. Grassby of the Indian Police Service has been granted by the High Commissioner for India leave "not due" on half average pay, on medical certificate, for three months.

Hooghly.—No. 7279A.—15th August 1931. —Rai Shib Charan Das Mehta Bahadur, Superintendent of Police, Hooghly, is allowed leave on average pay for twenty days, under rule 81 (*b*) (*i*) of the Fundamental Rules, with effect from the 24th August 1931.

R. N. REID,

Chief Secy. to the Govt. of Bengal (offg.).

NOTIFICATION.

No. 7167A.—11th August 1931. — The services of the Hon'ble Sir Provash Chunder Mitter, Kt., C.I.E., Member, Bengal Executive Council, are placed temporarily at the disposal of the Government of India, Home Department.

R. N. REID,

Chief Secy. to the Govt. of Bengal (offg.).

JUDICIAL DEPARTMENT.

No. 7412A.

Powers.

Jessore.—No. 7148A.—11th August 1931.— Babu Harendra Kumar Ghosh, Sub-Deputy Magistrate, Jessore, is vested with the powers of a Magistrate of the second class.

Nadia.—No. 7165A.—11th August 1931.— The Sub-Deputy Magistrates, on probation, named below, are vested with the powers of a Magistrate of the third class:—

Babu Radha Ballav Saha, Nadia.
Babu Suresh Chandra Sen Gupta, Nadia.

Burdwan.—No. 7205A.—13th August 1931. —In exercise of the powers conferred by section 12 of the Code of Criminal Procedure, 1898 (Act V of 1898), the Governor in Council is pleased to direct that Rai Sarada Prasanna Ghosh Bahadur, Deputy Magistrate, Burdwan, may exercise all or any of the powers with which he is invested under the said Code throughout the whole area of the Kalna subdivision of that district.

R. N. REID,

Chief Secy. to the Govt. of Bengal (offg.).

Appointments and Transfers.

Murshidabad.—No. 5858J.—10th August 1931.—In exercise of the powers conferred by sections 14 and 15 and the proviso to section 357 of the Code of Criminal Procedure, 1898 (Act V of 1898), the Governor in Council is pleased—

(*a*) to confer upon Babu Suchindra Nath Ray the powers of a Magistrate of the second class, in the district of Murshidabad, for a period of three years from the 8th September

1931, in respect to such cases as may be made over to him within the limits of the Jangipur subdivision of the said district,

(*b*) to direct that he shall, in addition to sitting singly, sit as a member of the Dhulian bench in the said district, and

(*c*) to direct him to take down evidence in the English language.

He is also vested, under section 190 (*1*) (*a*) and (*b*) of the Code of Criminal Procedure, with powers to take cognizance of cases under the municipal by-laws and of cases under section 34 of Act V of 1861.

24-Parganas.—No. 5872J.—10th August 1931.—In exercise of the powers conferred by sections 14 and 15 of the Code of Criminal Procedure, 1898 (Act V of 1898), the Governor in Council is pleased—

(*a*) to confer upon each of the gentlemen named below the powers of a Magistrate of the third class, in the district of the 24-Parganas, for a period of three years from the date of this notification, and

(*b*) to direct him to sit as a member of the Kamarhati bench in the said district—

Babu Haridas Mukharji.
Babu Mahadeb Chatarji.

Darjeeling.—No. 5923J. — 14th August 1931.—In exercise of the powers conferred by sections 14 and 15 and the proviso to section 357 of the Code of Criminal Procedure, 1898 (Act V of 1898), the Governor in Council is pleased—

(*a*) to confer upon Khan Bahadur F. Abdul Aziz the powers of a Magistrate of the third class, in the district of Darjeeling, for a period of three years from the 2nd September 1931, in respect to such cases as may be made over to him within the limits of the Sadar subdivision of the said district,

(*b*) to direct that he shall, in addition to sitting singly, sit as a member of the Sadar bench in the said district, and

(*c*) to direct him to take down evidence in the English language.

Midnapore.—No. 5925J. — 14th August 1931.—In exercise of the powers conferred by sections 14 and 15 of the Code of Criminal Procedure, 1898 (Act V of 1898), the Governor in Council is pleased—

(*a*) to confer upon each of the gentlemen named below the powers of a Magistrate of the third class, in the district of Midnapore, for a period three years from the date of this notification, in respect to such cases as may be made over to him within the limits of the Jhargram subdivision of the said district and

(*b*) to direct that he shall, in addition to sitting singly, sit as a member of the Jhargram bench in the said district—

Babu Srish Chandra Ray.
Babu Nripendra Gopal Mitra.

Murshidabad.—No. 5927J.—14th August 1931.—In exercise of the powers conferred by sections 14 and 15 and the proviso to section 357 of the Code of Criminal Procedure, 1898 (Act V of 1898), the Governor in Council is pleased—

(*a*) to confer upon Babu Bisweswar Ray the powers of a Magistrate of the first class, in the district of Murshidabad, for a period of three years from the 5th September 1931, in respect to such cases as may be made over to him within the limits of the Sadar subdivision of the said district,

(*b*) to direct that he shall, in addition to sitting singly, sit as a member of the Sadar bench in the said district, and

(*c*) to direct him to take down evidence in the English language.

Leave.

Chittagong.—No. 5917J.—24th July 1931.—Babu Jogendra Nath Das Gupta, munsif of South Raojan, in the district of Chittagong, is allowed leave on average pay for fifteen days, under rules 81 (*b*) (*ii*) and 82 (*b*) of the Fundamental Rules, with effect from the 17th July 1931.

Hooghly.—No. 5918J.—25th July 1931.—Babu Hari Charan Ghosh, officiating munsif of Arambagh, in the district of Hooghly, is allowed leave on half pay for one day, viz., the 27th July 1931, under Subsidiary Rule 275 (*a*) of the Fundamental Rules and the exception thereunder.

Midnapore.—No. 5919J.—30th July 1931.—Babu Jyoti Prasad Banarji, munsif of Midnapore (Sadar), is allowed privilege leave on full pay for the period from the 3rd to the 20th July 1931, under article 272 of the Civil Service Regulations.

Resignation.

Bogra.—No. 5885J.—11th August 1931.—The Governor in Council is pleased to accept the resignation tendered by Rai Gour Gopal Ray Bahadur of his office as an Honorary Magistrate of the Sadar independent bench, Bogra.

Powers.

Pabna.—No. 5846J.—8th August 1931.—In exercise of the power conferred by section 14 of the Code of Criminal Procedure, 1898 (Act V of 1898), the Governor in Council is pleased to confer upon each of the gentlemen named below, who are Honorary Magistrates of the Sadar bench, the powers of a Magistrate of the second class, in the district of Pabna, for the period during which he has been directed to sit as a member of the said bench in respect to cases brought before the said bench, within the limits of the jurisdiction of the said bench—

Babu Narendra Krishna Talukdar.
Babu Amrita Lal Chakrabatti.

NOTIFICATIONS.

Mymensingh.—No. 5899J.—12th August 1931.—In exercise of the power conferred by section 65 of the Bengal Village Self-Government Act, 1919 (Bengal Act V of 1919), the Governor in Council is pleased to appoint Maulvi Reazuddin Talukdar, a member of the Bhatara union board within the Jamalpur police-station in the Jamalpur subdivision of the Mymensingh district, to be, during his term of office as such member, a member of the union bench within the jurisdiction of the said union board for the purposes of that section.

Mymensingh.—No. 5900J.—12th August 1931.—In exercise of the power conferred by section 73 of the Bengal Village Self-Government Act, 1919 (Bengal Act V of 1919), the Governor in Council is pleased to appoint Maulvi Reazuddin Talukdar, a member of the Bhatara union board within the Jamalpur police-station in the Jamalpur subdivision of the Mymensingh district, to be, during his term of office as such member, a member of the union court within the jurisdiction of the said union board for the purposes of that section.

Faridpur. — No. 5902J. — 12th August 1931.—In exercise of the power conferred by section 65 of the Bengal Village Self-Government Act, 1919 (Bengal Act V of 1919), the Governor in Council is pleased to appoint Babu Kula Chandra Chaudhuri, a member of the Ulpur union board within the Gopalganj subdivision of the Faridpur district, to be, during his term of office as such member, a member of the union bench within the jurisdiction of the said union board for the purposes of that section, *vice* Babu Muti Lal Ray, resigned.

Faridpur. — No. 5903J. — 12th August 1931.—In exercise of the power conferred by section 73 of the Bengal Village Self-Government Act, 1919 (Bengal Act V of 1919), the Governor in Council is pleased to appoint Babu Kula Chandra Chaudhuri, a member of the Ulpur union board within the Gopalganj subdivision of the Faridpur district, to be, during his term of office as such member, a member of the union court within the jurisdiction of the said union board for the purposes of that section, *vice* Babu Muti Lal Ray, resigned.

Birbhum. — No. 5905J. — 12th August 1931.—In exercise of the power conferred by section 73 of the Bengal Village Self-Government Act, 1919 (Bengal Act V of 1919), the Governor in Council is pleased to appoint Maulvi Obedar Rahman, a member of the Rampurhat union board within the Rampurhat police-station in the Rampurhat subdivision of the Birbhum district, to be, during his term of office as such member, a member of the union court within the jurisdiction of the said union board for the purposes of that section, *vice* Babu Mani Mohan Ghosh, resigned.

Bakarganj.—No. 6014J.—17th August 1931.—In exercise of the power conferred by section 65 of the Bengal Village Self-Government Act, 1919 (Bengal Act V of 1919), the Governor in Council is pleased to appoint the following members of the union boards mentioned below to be, during their term of office as such members, union benches within the jurisdiction of the union boards of which they are, respectively, members for the purposes of that section:—

Bhola subdivision, district Bakarganj.

Police-station Bhola.

Kachia union board.

Munshi Mukelesar Rahman.
Maulvi Abdul Latif.
Munshi Muzaffar Ali.

North Dighaldi union board.

Munshi Mobarak Ali Sikdar.
Munshi Fazlur Rahman Mia.
Munshi Ali Akbar Biswas.

Police-station Daulatkhan.

Hazipur union board.

Munshi Garib Hossain Talukdar.
Munshi Kazi Syeduddin Ahmad.
Babu Chandra Nath Sen.

Bakarganj.—No. 6015J.—17th August 1931.—In exercise of the power conferred by section 73 of the Bengal Village Self-Government Act, 1919 (Bengal Act V of 1919), the Governor in Council is pleased to appoint the following members of the union boards mentioned below to be, during their term of office as such members, union courts within the jurisdiction of the said union boards of which they are, respectively, members for the purposes of that section:—

Bhola subdivision, district Bakarganj.

Police-station Bhola.

Kachia union board.

Munshi Muklesar Rahman.
Munshi Gagan Ali Sikdar.
Munshi Asmat Ali Mia.

North Dighaldi union board.

Munshi Mobarak Ali Sikdar.
Munshi Fazlur Rahman Mia.
Munshi Ali Akbar Biswas.

Police-station Daulatkhan.

Hazipur union board.

Munshi Garib Hossain Talukdar.
Munshi Rehanuddin Patari.
Babu Umesh Chandra Ray.

Tippera.—No. 6018J.—17th August 1931.—In exercise of the power conferred by section 65 of the Bengal Village Self-Government Act, 1919 (Bengal Act V of 1919), the Governor in Council is pleased to appoint Munshi Muhammad Faiz Patari, a member of the Paikpara union board within the Faridganj police-station in the Chandpur subdivision of the Tippera district, to be, during his term of office as such member, a member of the union bench within the jurisdiction of the said union board for the purposes of that section, *vice* Babu Jogendra Nath Gupta, resigned.

Tippera.—No. 6019J.—17th August 1931.—In exercise of the power conferred by section 73 of the Bengal Village Self-Government Act, 1919 (Bengal Act V of 1919), the Governor in Council is pleased to appoint Munshi Muhammad Faiz Patari, a member of the Paikpara union board within the Faridganj police-station in the Chandpur subdivision of the Tippera district to be, during his term of office as such member, a member of the union court within the jurisdiction of the said union board for the purposes of that section, *vice* Babu Jogendra Nath Gupta, resigned.

J. W. NELSON,
Secy. to the Govt. of Bengal.

LOCAL SELF-GOVERNMENT DEPARTMENT.

NOTIFICATIONS.

Minister-in-charge: The Hon'ble Mr. Bijoy Prasad Singh Roy.

Midnapore.—No. 3065M. — 11th August 1931.—In exercise of the power conferred by clause (*a*) of section 59 of the Bengal Municipal Act, 1884 (Bengal Act III of 1884), the Government of Bengal (Ministry of Local Self-Government) are pleased to approve the resolution passed by the Commissioners of the Khirpai Municipality in the district of Midnapore under section 27 of that Act, electing Babu Satish Chandra Singha to be their Chairman, *vice* Babu Rajendra Lal Adhicary, deceased.

24-Parganas.—No. 3067M.—11th August 1931.—In exercise of the power conferred by clause (*a*) of section 59 of the Bengal Municipal Act, 1884 (Bengal Act III of 1884), the Government of Bengal (Ministry of Local Self-Government) are pleased to approve the resolution passed by the Commissioners of the South Dum Dum Municipality in the district of the 24-Parganas under section 23 of that Act, electing Babu Profulla Kumar Guha, B.A., M.L.C., to be their Chairman.

Howrah.—No. 3069M.—11th August 1931.—In exercise of the power conferred by clause (*a*) of section 59 of the Bengal Municipal Act, 1884 (Bengal Act III of 1884), the Government of Bengal (Ministry of Local Self-Government) are pleased to approve the resolution passed by the Commissioners of the Howrah Municipality under section 23 of that Act, electing Babu Barada Prasanna Pain to be their Chairman.

Malda.—No. 3150L.S.-G. — 14th August 1931.—In exercise of the power conferred by section 22 of the Bengal Local Self-Government Act, 1885 (Bengal Act III of 1885), the Government of Bengal (Ministry of Local Self-Government) are pleased to approve the election by the members of the Malda district board of Maulvi Zahur Ahmed Choudhury as their Chairman.

Midnapore.—No. 3152M. — 14th August 1931.—In exercise of the power conferred by section 14 of the Bengal Municipal Act, 1884 (Bengal Act III of 1884), the Government of Bengal (Ministry of Local Self-Government) are pleased to appoint the following gentlemen to be Commissioners of the Kharar Municipality in the district of Midnapore:—

Babu Naba Krishna Mukherjea.

Babu Charu Chandra Banerjea.

Babu Rasik Lal Santra.

Babu Hari Pada Ghosh.

Babu Hari Pada Ray.

24-Parganas.—No. 3154M.—14th August 1931.—In exercise of the power conferred by section 17 of the Bengal Municipal Act, 1884 (Bengal Act III of 1884), the Government of Bengal (Ministry of Local Self-Government) are pleased to remove the name of the Baruipore Municipality, in the district of the 24-Parganas, from the first schedule of the Act.

2. In exercise of the power conferred by sub-section (*4*) of section 23 of the said Act, the Government of Bengal (Ministry of Local Self-Government) are further pleased to remove the name of the said municipality from the second schedule of that Act.

24-Parganas.—No. 3195M.—14th August 1931.—In exercise of the power conferred by clause (*a*) of section 59 of the Bengal Municipal Act, 1884 (Bengal Act III of 1884), the Government of Bengal (Ministry of Local Self-Government) are pleased to approve the resolution passed by the Commissioners of the Taki Municipality in the district of the 24-Parganas under section 27 of that Act, electing Babu Mahatap Chandra Rai Chaudhury to be their Chairman, *vice* Babu Hiran Chandra Ghosh, on leave.

No. 3072L.S.-G.—11th August 1931.—The following draft of amendments, which in exercise of the power conferred by clause (*a*) of section 138 of the Bengal Local Self-Government Act of 1885 (Bengal Act III of 1885), the Government of Bengal (Ministry of Local Self-Government) propose to make in the rules published with notification, dated the 15th December 1885, as subsequently amended, is published for the information of persons likely to be affected thereby.

2. The draft will be taken into consideration on or after the 1st October 1931, and any objections or suggestions received by the undersigned through the District Officers before that date will be duly considered :—

Draft amendments.

For rules 19 to 34A substitute the following, namely :—

PART II.—Election Rules.

Election of Members of Local Boards.

Preliminary.

19. When the number of members of a Local Board has been fixed by a notification issued under section 8 of the Act, the Commissioner, after consultation with the Magistrate of the district, shall decide the number of members to be elected for each thana within the area of such Local Board, and shall issue orders accordingly. Such orders shall be published in the *Calcutta Gazette*, at the district and subdivisional offices and at the headquarters of each of the thanas in question and in such other manner as the Commissioner may prescribe.

20. The first election under these rules of the members of a newly established Local Board, who will not be appointed under section 15 of the Act, shall take place at such time, not being more than six months after the date of the notification establishing the Local Board, as the Local Government may direct. Similar election of the members of a Local Board to which the elective system has been newly introduced shall be held on a date fixed by the Local Government, such date being not later than the date on which the term of office of the outgoing members of the Local Board under rule 61 expires.

20A. The Magistrate of the district shall, within three months after the expiry of the second year of the term of office of the members of a Local Board including a Local Board to which the elective system has been newly introduced, publish a programme specifying approximately the dates of each of the following stages which shall be followed for the purpose of the next general election, namely :—

(*1*) commencement of the preparation of a register of voters under rule 22;

(*2*) preliminary publication of the register under rule 23;

(*3*) final settlement of the register under rule 26C;

(*4*) issue of notices for nominations of candidates for election under rule 29;

(*5*) publication of the list of qualified candidates under rule 31;

(*6*) polling.

In the case of a new Local Board the members of which will not be appointed under section 15 of the Act, the programme may be published within two months after the publication of the notification establishing the Local Board.

Of the qualification of electors.

21. Every male person of the full age of twenty-one years, resident within the area under the authority of a Local Board,

(*1*) who is a member of a Union Committee within such area; or

(*2*) who has during the Bengali year immediately preceding the publication of voters' register under rule 23—

(*a*) paid—

(*i*) a sum of not less than one rupee as cess under the Cess Act, 1880, in respect of land situated either wholly or in part within such area, or

(*ii*) rupee one on account of chaukidari tax; or

(*b*) been possessed of a clear annual income from any source of not less than two hundred and forty rupees; or

(*3*) who being a member of a joint undivided family, one of the members of which is qualified to be an elector as in this rule hereinbefore provided, is a graduate or licentiate of any University or holds a certificate as a pleader or mukhtear,

shall be entitled to vote at an election of members of such Local Board:

Provided that this rule shall not apply to union board areas where the qualifications required of a candidate for election are those stated in section 9 (*2*) of the Bengal Local Self-Government Act of 1885, as amended by section 2 (*1*) of the Bengal Village Self-Government Act, 1919.

Of the registration of electors.

22. In all districts mentioned in the Third Schedule of the Act, or in which a Local Board may hereafter be established, the members of which will not be appointed under section 15 of the Act, or in which the elective system has been newly introduced to any Local Board, the Magistrate of the district shall—

(*a*) within four months after the expiry of the second year of the term of office of the outgoing members of a Local Board or within a week after the local publication of the orders under rule 19, as the case may be, provisionally select polling centres in each thana within the area of the Local Board which will be used at the next general election, and

(*b*) fix a date not later than five months after the second year of the term of office of the Local Board or two weeks after the local publication of the orders under rule 19, as the case may be, on which the preparation of a register of persons qualified to vote at each such polling centre shall be commenced.

The register shall be prepared from the assessment lists, from enquiries made by persons specially deputed for the purpose, and in such other manner as may appear expedient. No person shall vote at any polling centre unless his name is borne on the register of such polling centre.

23. Within three months after the date fixed under rule 22 (*b*) lists of voters residing within Panchayati or Village Self-Government Unions shall be published at the offices of the Unions concerned. Copies of all the thana registers shall also be published at the subdivisional office.

24. Any person whose name does not appear in the register and who claims the right of voting, may, within one month after the publication of the register under rule 23, apply in writing to the Magistrate of the district, or to such other officer as the Magistrate of the district may appoint in this behalf, stating distinctly the grounds of his application, to have his name inserted in the register or substituted for any name in the register.

25. Any person whose name is in the register and who considers that any name appearing in the register ought to be omitted, may, within one month after the publication of the register under rule 23, apply in writing to the Magistrate of the district, or to such other officer as the Magistrate of the district may appoint in this behalf, stating distinctly the grounds of his application to have such name omitted.

26. The application referred to in rule 24 or rule 25 need not be stamped and may be submitted either by post or through an agent.

26A. A notice of every application made under rule 24 or rule 25 shall be published at the office of the Union Board or President Panchayat in whose jurisdiction the voter resides, within one week of its presentation, fixing a date on which the application will be considered. Such date shall not be later than six weeks after the publication of the register under rule 23.

26B. Every application made under rule 24 or rule 25 shall be duly considered by the Magistrate of the district, or such other officer as may be appointed by him in this behalf on the date fixed under rule 26A and the decision of the Magistrate or of the officer so appointed, as the case may be, shall be final:

Provided that in respect of Union Board areas claims or objections under rule 24 or rule 25 shall be decided with reference to the qualifications prescribed for an elector by section 9 (*1*) of the Bengal Local Self-Government Act of 1885, as amended by section 2 (*1*) of the Bengal Village Self-Government Act, 1919.

26C. The register shall be amended in accordance with the decisions made under rule 26B and shall be deemed to be the final register of persons entitled to vote at the election. No person whose name does not appear in it shall be permitted to vote. Not later than one week after the date fixed under rule 26A copies of the final register shall be published in the same manner as the original register containing all the alterations or amendments made by the Magistrate of the district, or by such other officer as may be appointed by him in this behalf. No person whose name does not appear in such final register shall be permitted to vote.

26D. (*1*) The Magistrate of the district shall cause to be printed as many copies of the register of voters prepared under rule 22 as he thinks fit, but not less than 25, in addition to the copies that he requires for carrying on the election. Subsequent corrections in the printed copy will be made in manuscript.

(*2*) Printed copies of the register shall be kept at the offices of the District Magistrate, Subdivisional Officers, the District Board and the Local Boards for sale to the public at prices to be fixed by the District Magistrate from time to time, having regard to the cost of printing, subject to a maximum of Rs. 5 for a single copy:

Provided that no such printed copy shall be sold to any person until fourteen days before the date fixed for the election, unless such person is a candidate (or an agent acting on his behalf), in which case he shall be entitled to buy one copy only of the register relating to the thana for which he is a candidate.

(*3*) Sale-proceeds of printed copies shall be credited to the District Fund.

26E. (*1*) Notwithstanding anything contained in rule 26D, the District Board may decide that the register of voters shall not be printed on the ground of excessive expense involved, provided that the District Board obtained the sanction of the Commissioner of the Division in this behalf before the preparation of the register of voters is undertaken under rule 22 in connection with each general election.

(*2*) In every case under sub-rule (*1*) the District Board shall, not later than one week after the publication of the register under rule 26C, cause a vernacular notice in the following form to be despatched by post or by such other mode as may be found convenient to every elector whose name appears in the register:—

You are hereby informed that you are registered as a voter for the.....thana, that you will be entitled to vote at the election of.....(state number) members of the local board to be held at.....(name place or places) on the..... .....between the hours of.....and.....and that the result of the election shall be notified at..... (name place) on the.....at.....a.m. or p.m.

Of the qualification and the nomination of candidates.

27. Every male person of the full age of twenty-one years—

(*1*) who is a member of a Union Committee within the area under the authority of the Local Board; or

(*2*) who during the year immediately preceding the election had his fixed place of abode within the subdivision for which such Local Board has been established, and

(*a*) has paid a sum of not less than five rupees on account of road-cess in respect of land situated either wholly or in part within the area under the authority of the Local Board; or

(*b*) has been possessed of a clear annual income from any source of not less than one thousand rupees; or

(*3*) who being a member of a joint undivided family, one of the members of which is qualified for election under clause (*1*) or clause (*2*) (*a*) of this rule, is a graduate or licentiate of any university, or holds a certificate as a pleader or mukhtear,

shall be qualified for election as a member of the Local Board for any thana under the authority of such Local Board:

Provided that this rule shall not apply to union board areas where the qualifications required of a candidate for election are those stated in section 9 (2) of the Bengal Local Self-Government Act of 1885, as amended by section 2 (*l*) of the Bengal Village Self-Government Act, 1919.

28. *Cancelled.*

29. The Magistrate of the district shall within one month and a half after the publication of the voters' register under rule 23 issue notices calling for nominations of candidates. Such notices shall be published at the office of every Union Board or President Panchayat within the thana. Within one month from the date of publication of the notices every person who is a candidate for election shall send his name to the Magistrate with the necessary particulars filled up in the following form supported by the signatures or thumb impressions of ten electors whose names appear on the date on which the nomination is sent, in the register of voters of the thana in which he proposes to stand No names of candidates shall be received after the expiration of such period and no nomination shall be held to be valid unless the nomination form is properly filled in :—

Form for the nomination of candidates for election to the .... Local Board.

Name of thana in which election is sought.....

Name of candidate..... ....

Address..... .....

Number in voters' register.....

Particulars of qualifications.....

Signature of candidate with date.....

Names of 10 electors supporting.....

Their numbers in the voters' register.....

Particulars of their qualifications.....

Signature of electors supporting with date.....

EXPLANATION.—For the purposes of this rule the latest date on which the notice is published at the office of any union board or president panchayat within the thana, shall be deemed to be the date of publication of the notice in each union within that thana

30. Not later than four weeks after publication of the notices under rule 29 the Magistrate of the district, or such other officer as he may appoint in this behalf for any particular area, shall publish a notice in the offices of the Panchayati or Village Self-Government Unions, as the case may be, fixing the date on which and the hour at which nomination papers shall be scrutinised by him, such date being not later than two weeks after the publication of the said notice. On the date so fixed for scrutiny he shall ascertain whether all of the nominated candidates are duly qualified to take office; his decision on this point shall be final. He shall also, if possible, ascertain whether they are all willing to take office.

NOTE.—The qualification of candidates shall be judged either under rule 27 or under section 9 (2) of the Bengal Local Self-Government Act of 1885 as amended by the Bengal Village Self-Government Act, 1919, as the case may be.

31. A list of the candidates who are duly qualified and who appear to be willing to take office, shall be published at suitable places in the thana not later than a week after the date mentioned in rule 30. No candidate, whose name does not appear in such list, shall be considered eligible. A copy of the list of candidates, thana by thana, shall be kept in the Magistrates' and Subdivisional offices for perusal of the public.

Of the manner of holding elections.

31A. If the number of candidates for each thana mentioned in the list published under rule 31 is not greater than the number of vacancies for that thana, the Magistrate of the district shall at once declare such candidates to be duly elected.

32. If the number of candidates for the thana is greater than the number of vacancies, the Magistrate of the district shall fix a date for holding the election. Such date shall be as soon as possible after two weeks from the publication of the list of candidates under rule 31 and shall be notified in the *Calcutta Gazette* and published at such places within the thana as the Magistrate of the district may consider suitable.

33. Not later than a week after the final publication of the voters' register under rule 26C, the Magistrate of the district shall finally select the polling centres in each thana and shall notify the names of such polling centres and the place or places fixed for the election at such places within the thana as may appear suitable to him.

34. *Cancelled.*

34A. The hours between which the election will be held shall be stated in the notification published under rule 33 and at the end of that time no elector shall be admitted within the building or enclosure within which the election proceedings are being held, but the votes of all duly-registered voters who are already within the building or enclosure shall be recorded.

Medical.

Minister-in-charge: The Hon'ble Mr. Bijoy Prasad Singh Roy.

Calcutta.—No. 2459Medl.—11th August 1931.—Lt. W. G. H. Warner, I.M.D., House Surgeon, Presidency General Hospital, Calcutta, is appointed as Assistant to the Surgeon-Superintendent of the Hospital, with effect from the 16th June, 1931, *vice* Major C. G. deGruyther, I.M.D.

Calcutta.—No. 2460Medl.—11th August 1931.—Assistant Surgeon Dr. Wahiuddin Mahmud, on supernumerary duty at the Presidency General Hospital, is appointed as a House Surgeon of the Hospital, with effect from the 16th June 1931, *vice* Lt. W. G. H. Warner, I.M.D.

Calcutta.—No. 2462Medl. — 11th August 1931.—Lt.-Col. R. Knowles, I.M.S., Professor of Protozoology, School of Tropical Medicine and Hygiene, Calcutta, is allowed leave on average pay with effect from the 15th July 1931 to the 14th October 1931, under Fundamental Rules 81 (*b*) (*i*) and 82 (*b*).

This cancels notification No. 1564Medl., dated the 8th May 1931.

NOTIFICATIONS.

No. 2512Medl.—15th August 1931.—In exercise of the power conferred by section 18 of the Bengal Medical Act, 1914 (Bengal Act VI of 1914), and on the recommendation of the Bengal Council of Medical Registration, the Governor in Council is pleased to direct that the possession of the M.B.B.S. degree granted by the Mysore University shall, subject to the provisions and conditions referred to in clause (*i*) of that section, entitle any person to have his name entered in the register of registered practitioners maintained under section 15 of the said Act.

Minister-in-charge: The Hon'ble Mr. Bijoy Prasad Singh Roy.

24-Parganas.—No. 2516Medl.—15th August 1931.—In exercise of the power conferred by clause (*6*) of section 3 of the Indian Lunacy Act, 1912 (IV of 1912), the Government of Bengal (Ministry of Local Self-Government) are pleased to empower Babu Harendra Nath Dutta, Police Magistrate, Sealdah, to perform the functions of a Magistrate under the Act in the district of 24-Parganas.

C. W. GURNER,

Secy. to the Govt. of Bengal.

Orders by the Director of Public Health, Bengal.

No. 11157A.—12th August 1931.—In the interest of the public service, Assistant Analyst Babu Sudhir Kumar Das is hereby transferred to the Calcutta Public Health Laboratory from Dacca, with effect from the 1st August 1931.

R. B. KHAMBATA,

Director of Public Health, Bengal (offg.).

EDUCATION DEPARTMENT.

NOTIFICATIONS.

Darjeeling.—No. 2224Edn.—15th August 1931.—Mr. E. C. G. J. Hessing is appointed to be Head Master, Victoria Boys' School, Kurseong, with effect from the 20th July 1931, the date on which he joined the appointment.

Minister-in-charge: The Hon'ble Mr. K. Nazim-ud-Din, C.I.E.

Rajshahi Divn. — No. 2201Edn. — 13th August 1931.—Khan Sahib Maulvi Mahtab-uddin Ahmad, officiating Second Inspector of Schools, Rajshahi Division, acted as Inspector of Schools, Rajshahi Division, on his own pay in the Bengal Educational Service and in addition to his own duties, for the period from the 26th April to the 19th July 1931 (both days inclusive), pending the arrival of Khan Bahadur Maulvi Tasaddak Ahmad.

Chittagong.—No. 2209Edn. - 13th August 1931.—Babu Mahima Ranjan Barua, Professor, Chittagong College, was allowed leave out of India and Ceylon on average pay for the period from the 24th October 1930 to the 11th February 1931, under the proviso to rule 81 (*b*) (*ii*) of the Fundamental Rules, in combination with the Puja vacation of the college for the year 1930 extending from the 21st September to the 23rd October 1930, under rule 82 (*d*) of those rules.

2. This cancels the orders in notification No. 1149Edn., dated the 26th March 1931.

Calcutta.—No. 2227Edn. — 15th August 1931.—Babu Probodh Chandra Ganguli, Assistant Head Master, Hindu School, Calcutta, is appointed to act in the Bengal Educational Service as a Professor, David Hare Training College, with effect from the 6th July 1931, or any subsequent date on which he joined the appointment, during the absence, on leave, of Mr. Kshetrapal Das Ghosh.

Nadia.—No. 2242 Edn.—17th August 1931. —Babu Sudhansu Badan Pandu, officiating Lecturer in Mathematics, Krishnagar College, is appointed to act temporarily in the Bengal Educational Service as Professor of Mathematics in that College, with effect from the 3rd August 1931, or any subsequent date on which he assumes the duties of the post.

Registration.

NOTIFICATIONS.

Minister-in-charge: The Hon'ble Mr. K. Nazim-ud-Din, C.I.E.

Hooghly.—No. 682Regn. — 10th August 1931.—Babu Kunja Bihari Mukharji, Sadar Sub-Registrar, on return from leave, is appointed to be Sadar Sub-Registrar of Hooghly.

Tippera.—No. 686Regn. — 12th August 1931.—In supersession of all previous orders the Government of Bengal (Ministry of Education) are pleased to direct that the Sub-Registry offices within the registration sub-district of Comilla, having jurisdiction over the police-stations of Comilla (Kotwali), Burichang and Kasba, in the district of Tippera, should be styled as "Sadar First Joint," "Second Joint at Comilla," "Third Joint at Comilla" and "Fourth Joint of Comilla at Kasba."

A. J. DASH,

Secy. to the Govt. of Bengal.

Orders by the Inspector-General of Registration, Bengal.

Hooghly-Jessore.—No. 539.—14th August 1931. Babu Satish Chandra Banarji, Sub-Registrar, on being relieved of his officiating appointment as Sadar Sub-Registrar of Hooghly, is appointed to be Sub-Registrar of Rajganj, in the district of Jessore.

24-Parganas-Jessore. — No. 540. — 14th August 1931.—Maulvi Ahmad Ali, No. II, Probationary Sub-Registrar of Alipore, 24-Parganas, on being relieved of his officiating appointment as Sub-Registrar of Simakhali, in the district of Jessore, is allowed leave on average pay for one month, under Subsidiary Rule 288 framed under rule 104 (*b*) of the Fundamental Rules, with effect from the date on which he may be relieved.

24-Parganas-Jessore. — No. 541. — 14th August 1931.—Babu Bhababhuti Bhattacharya, Sub-Registrar attached to Alipore, 24-Parganas, is appointed to act, until further orders, as Sub-Registrar of Simakhali, in the district of Jessore, with effect from the date on which he joins the appointment.

Bakarganj.—No. 542.—17th August 1931. —Maulvi A. K. M. Fakaruddin Ahmad, Sub-Registrar of Bakarganj (Shahibganj), in the district of Bakarganj, is allowed leave on average pay for two days, viz., for the 1st and 2nd June 1931, under rule 81 (*b*) (*ii*) of the Fundamental Rules.

Dacca.—No. 543.—17th August 1931.— Maulvi Khwaja Muhammad Salim, Sub-Registrar attached to Dacca, is allowed leave on average pay for one month, under rule 81 (*b*) (*ii*) of the Fundamental Rules, in extension of the leave granted to him in this department notification No. 502, dated the 29th July 1931.

Bakarganj.—No. 544.—17th August 1931. —Babu Dinesh Chandra Chanda, while Sub-Registrar of Bamrail, now Sub-Registrar of Muladhi, in the district of Bakarganj, is allowed leave on average pay for three days, under rule 81 (*b*) (*ii*) of the Fundamental Rules, in extension of the leave granted to him in this department notification No. 128, dated the 25th February 1931.

Khulna.—No. 545.—17th August 1931.— Babu Mani Bhusan Ray Chaudhury, Sub-Registrar of Islamkati, in the district of Khulna, is allowed leave on average pay for fifteen days, under rule 81 (*b*) (*ii*) of the Fundamental Rules, with effect from the 21st June 1931.

This cancels this department notification No. 454, dated the 10th July 1931, granting leave on average pay for twenty-eight days to Babu Mani Bhusan Ray Chaudhury, Sub-Registrar of Islamkati, Khulna, from the 20th June 1931.

Khulna.—No. 546.—17th August 1931.— Babu Mani Bhusan Ray Chaudhury, Sub-Registrar of Islamkati, in the district of Khulna, is allowed leave on average pay for one month, under rule 81 (*b*) (*ii*) of the Fundamental Rules, with effect from the 10th July 1931.

Khulna-24-Parganas. — No. 547. — 17th August 1931.—Babu Bhababhuti Bhattacharya, Sub-Registrar attached to Alipore, 24-Parganas, is appointed to act as Sub-Registrar of Islamkati, in the district of Khulna, with effect from the 21st July 1931, during the absence, on leave, of Babu Mani Bhusan Ray Chaudhury, Sub-Registrar, or until further orders.

Bakarganj.—No. 548.—17th August 1931. Babu Charu Kanta Sen, Sub-Registrar of Rajapur, in the district of Bakarganj, is allowed leave on average pay for the 6th July 1931, under rule 81 (*b*) (*ii*) of the Fundamental Rules.

Bakarganj.—No. 549.—17th August 1931.—Babu Nakuleswar Chakrabatti, officiating Sub-Registrar of Bamna, in the district of Bakarganj, is allowed leave on average pay for five days, under rule 81 (*b*) (*ii*) of the Fundamental Rules, with effect from the 21st July 1931.

This cancels this department notification No. 510, dated the 29th July 1931, granting leave on average pay for twenty-nine days to Babu Nakuleswar Chakrabatti, officiating Sub-Registrar of Bamna, Bakarganj, from the 21st July 1931.

Calcutta-Bakarganj. — No. 550. — 17th August 1931.— Babu Nakuleswar Chakrabatti, Sub-Registrar attached to Calcutta, on being relieved of his officiating appointment as Sub-Registrar of Bamna, in the district of Bakarganj, is allowed leave on average pay for twenty-four days, under rule 81 (*b*) (*ii*) of the Fundamental Rules, with effect from the 6th August 1931.

Tippera.—No. 551.—17th August 1931.—Maulvi A. B. Saiyid Rezai Karim, Sub-Registrar attached to Comilla, Tippera, is allowed leave on average pay for fifteen days, under rule 81 (*b*) (*ii*) of the Fundamental Rules, with effect from the 20th July 1931.

Burdwan.—No. 552.—17th August 1931.—Maulvi Khundkar Ali Asghar, Sub-Registrar of Katwa, in the district of Burdwan, is allowed leave on average pay for three days, under rule 81 (*b*) (*ii*) of the Fundamental Rules, with effect from the 16th July 1931.

S. AHMED,
Inspector-General of Regn., Bengal.

MARINE DEPARTMENT.

NOTIFICATIONS.

No. 31Mne.—29th July 1931.—The following by-law regulating the discharge of dangerous petroleum in bulk in the Port of Calcutta, made by the Commissioners under sub-section (*1*) of section 126 and section 127 of the Calcutta Port Act, 1890 (Ben. Act III of 1890), subject to the confirmation of the Local Government, is published for general information, as required by sub-section (*4*) of the said section 126.

2. The by-law will be taken into consideration on the expiry of a month after the first publication of this notification in the *Calcutta Gazette*, and any suggestion or objection with regard thereto received by the undersigned within that period will be considered:—

Draft By-law.

"Without the previous permission in writing of the Commissioners, no person shall use or cause to be used steam generated in the boilers of a vessel for the purpose of discharging dangerous petroleum in bulk within the Port.

A breach of this by-law shall be punishable with a fine which may extend to Rs. 500."

No. 32Mne.—8th August 1931.—The following draft of amendments, which, with the previous sanction of the Governor-General in Council and in exercise of the power conferred by section 5 of the Indian Explosives Act, 1884 (IV of 1884), the Governor in Council proposes to make in the rules to regulate the transport and importation of explosives in the Port of Calcutta published under this department notification No. 78 Mne., dated the 10th July 1923, is published, as required by section 18 of the said Act, for the information of persons likely to be affected thereby.

2. The draft amendment will be taken into consideration on or after the 20th September 1931, and any suggestion or objection with regard thereto received by the undersigned before that date will be considered:—

Draft amendments.

Insert the following as rule 1 and renumber the existing rule 1 as 1-A:—

1. These rules except rule 11-A shall not apply to the following manufactured fireworks comprised in Class 7, Division 2 in rule 10 (*b*) of the Indian Explosives Rules, 1914, namely:—

Wonder candles, star matches, aluminium matches, meteor matches, Chinese crackers, Silbera sparklers, golden sparklers, electric sparklers, magic sparklers, amorces or caps for toy pistols, Putputias, Martinicas magic wire, and brilliant star matches.

Insert the following as rule 11-A:—

11-A. The fireworks mentioned in rule 1 may be brought into the Port of Calcutta and landed on the quays at the docks or jetties provided they are immediately removed to the special fireworks godown allotted for their exclusive storage.

E. N. BLANDY,
Secy. to the Govt. of Bengal.

FINANCE DEPARTMENT.

Audit.

ADDENDA AND CORRIGENDA.

No. 3539F.—17th August 1931. — The following corrections, which have been authorised, are published for general information:—

The Bengal Financial Rules, 1st Edition (Reprint), 1930.

Page 178, F.R. Appendix 3, rule 12 (11), clause (e).—*Add* the following at the end of the clause:—

The purchase of publications published outside India should be made from firms approved by Government from time to time.

Page 179, F.R. Appendix 3, rule 12 (11), clause (g) as inserted by correction slip No. 31, dated the 15th June 1929.—*Delete* this clause.

Page 373—T. O. Form No. 1.—*Substitute* the following on pages 373-373 (*a*) for T. O. Form No. 1 :—

T. O. Form No. 1.

(See T. O. 16, S. R. 40.)

(NOTE.—Government accepts no responsibility for any fraud or misappropriation in respect of money on cheques on bills made over to a messenger.)

Name of Gazetted Government servant

District

Pay Bill

Audit No. | Head of service (For use in Accountant-General's office). | Voucher No. _____ List of payments for _____ of _____ 19

	Monthly rate. Rs. a.	Amount. Rs. a.
Received for the month of _____ 19		
My substantive pay as _____		
Gross claim.		

Less—Fund deductions as follows :—

I. C. S. Provident Fund .. ..

Postal Insurance and Life Annuity Fund .

Uncovenanted Service Family Pension Fund ..

Bengal and Madras Service Family Pension Fund .. ..

General Family Pension Fund .. ..

Hindu Family Annuity Fund .. ..

Bengal Christian Family Pension Fund ..

General Provident Fund .. ..

I. C. S./I. M. S. Family Pension Regulations (as detailed on the reverse).

Superior Services (India) Family Pension Fund (as detailed on the reverse).

Indian Military Widows' and Orphans' Fund (as detailed on the reverse) .. ..

Net claim

Deduct—Income-tax at pies in the rupee on Rs.

Less—Abatement on Rs. paid for Life Insurance.

(Premium receipts or attested copies thereof for Rs. attached.)

Deductions on account of Advances and Recoveries as detailed below :—

Advance of pay

House rent

.....overdrawn

Net amount payable

(Net amount to be written in words) Rupees _____

Please pay to _____

_____

The _____ 19 Signature.

Signature of officer.

For use in Audit Office.	For use in Treasury.
Admitted Rs.	Pay Rupees ( )
Objected Rs.	
Auditor. Senior Accountant.	Accountant. Treasury Officer.
	Incorporated in Sadar
	Treasury Accountant. Accountant.

(Reverse.)

T. O. Form No. 1.

(See T. O. 16, S.R. 40.)

Directions For Note.

1. A pay bill may be presented at District Treasury two days before the last working day of the month by the labour of which the pay is earned.

2. A pay bill may, if desired, be enfaced for payment to a Banker or Agent and submitted for collection through such Banker or Agent, this will obviate the necessity of the officer's attendance in person or by messengers, as payment may then be made direct to the Banker or Agent.

3. When exemption is claimed in respect of any amount paid to an Insurance Company, the original receipt of the Company for the amount paid or an attested copy thereof should be attached to the pay bill. The receipt will be returned with the cheque.

4. The period for which a subscription to a Fund is due should be specified when it differs from the period for which pay is drawn.

5. The Fund deductions of a Covenanted Civil Servant are taken upon his allowances before deductions on account of Civil Service Provident Fund.

6. The Government of India exercises no supervision over the management of the Hindu Family Annuity Fund, the General Family Pension Fund and the Bengal Christian Family Pension Fund and is no way responsible for their solvency.

7. In the case of officers entitled to Sterling Overseas Pay, fund deductions are based on the Rupee pay *plus* the rupee equivalent of the Sterling Overseas Pay.

8. When the deduction on account of income tax shown in the bill includes tax calculated on Sterling Overseas Pay, the details of the calculation, on which the deduction is based, may be given at the foot of bill or, if there be no space at the foot, in some other suitable place; the total being brought into the body of the bill in the appropriate place and the two entries connected with a letter mark or otherwise. The details should show the sterling amount of the Overseas Pay as also its rupee equivalent.

The details relating to I.C.S./I.M.S. Family Pension Regulations, the Superior Services (India) Family Pension Fund and Indian Military Widows' and Orphans' Fund and two money columns, one for rates in sterling and another for payments in rupees, should be printed here. These details should be signed.

NOTE.—Treasury and Audit Officers should see that all compulsory deductions including those for I.C.S. Provident Fund are duly made and that Schedules regarding General Provident Fund and I.C.S. Provident Fund, when such schedules are prepared by the Officers themselves, are attached to the pay bills.

E. N. BLANDY,
Secy. to the Govt. of Bengal.

COMMERCE DEPARTMENT.

NOTIFICATIONS.

No. 4010Com.—14th August 1931.—In exercise of the powers conferred by clause (*b*), sub-section (3) of section 2 of the Indian Factories Act, 1911 (XII of 1911), the Governor in Council is pleased to declare the premises wherein the process of glass manufacture is carried on by Mr. A. N. Sen at the New Indian Glass Works, 101, Ultadingi Main Road, 24-Parganas, to be a factory within the meaning of the said Act.

No. 4026Com.—15th August 1931.—In exercise of the power conferred by sub-rule (*1*) of rule 20 of the Workmen's Compensation Rules, 1924, made under section 32 of the Workmen's Compensation Act, 1923 (VIII of 1923), and published under the Government of India, Department of Industries and Labour notification No. L. 1182, dated the 21st June 1924, the Governor in Council is pleased to authorise the Sub-Deputy Magistrate of Sandwip, in the district of Noakhali, to receive applications sent to him by the Commissioner for Workmen's Compensation, Bengal, and, when so directed by the Commissioner, to examine the applicant on oath and forward the records thereof to the Commissioner.

E. N. BLANDY,
Secy. to the Govt. of Bengal.

PUBLIC WORKS DEPARTMENT.

Establishment.

NOTIFICATIONS.

Minister-in-charge: The Hon'ble Khan Bahadur Maulvi K. G. M. Faroqui.

No. 48.—12th August 1931.—Babu Sailendra Nath Mazumdar, Assistant Engineer, is, on return from leave, posted to the Presidency Circle.

L. R. FAWCUS,
Secy. to the Govt. of Bengal.

No. 47.—8th August 1931.—Babu Bhupendra Nath Sarkar, Assistant Engineer, Chittagong Division, is granted, under rule 81 (*b*) (*ii*) of the Fundamental Rules, leave on average pay for one month, with effect from the 17th July 1931.

W. J. KERR,
Chief Engineer (offg.).

IRRIGATION DEPARTMENT.

Establishment.

NOTIFICATION.

No. 9-C.I.E.—11th August 1931.—Babu Hari Sadhan Ganguli, Assistant Engineer, is granted leave on average pay for fifteen days, under rule 81 (*b*) (*ii*) of the Fundamental Rules, with effect from the 7th August 1931, or from any subsequent date.

S. N. BANERJEE,
Chief Engineer (offg.).

DEPARTMENT OF AGRICULTURE AND INDUSTRIES.

Veterinary.

NOTIFICATIONS.

Minister-in-charge: The Hon'ble Khan Bahadur Maulvi K. G. M. Faroqui.

No. 3580Vety.—12th August 1931.—Babu Hari Charan Gangali, Inspector, Civil Veterinary Department attached to the Bengal Veterinary College, is appointed to act as Lecturer of the College, in the Bengal Lower Veterinary Service, with effect from 1st July 1931, *vice* Babu Surendra Krishna Mitra, retired.

No. 3595Vety.—13th August 1931.—Lt. Sachchidananda Datta is confirmed in his appointment of Lecturer, Bengal Veterinary College, in the Bengal Lower Veterinary Service, with effect from the 7th May 1930.

L. R. FAWCUS,
Secy. to the Govt. of Bengal.

Orders by the Registrar of Co-operative Societies, Bengal.

No. 7-L.—27th July 1931.—Whereas I am of opinion, as the result of an enquiry held into the constitution, working and financial condition of the Sultanpur Samabaya Samiti (registered No. 132 of 1925), in the subdivision Thakurgaon in the district of Dinajpur, under sub-section (*1*) of section 35 of the Co-operative Societies Act, II of 1912, that the society ought to be dissolved.

Now, therefore, in exercise of the power conferred by sub-section (*1*) of section 39 of the same Act, I hereby cancel the registration of the said society.

And further, in exercise of the power conferred by sub-section (*1*) of section 42 of the same Act, I hereby appoint the Departmental Officer in charge of the Thakurgaon Circle to be liquidator of the said society.

No. 8-L.—27th July 1931.—Whereas I am of opinion, as the result of an enquiry held into the constitution, working and financial condition of the Rajeswarpur Co-operative Credit Society (registered No. 505 of 1917), in the subdivision Balurghat in the district of Dinajpur, under sub-section (*1*) of section 35 of the Co-operative Societies Act, II of 1912, that the society ought to be dissolved.

Now, therefore, in exercise of the power conferred by sub-section (*1*) of section 39 of the same Act, I hereby cancel the registration of the said society.

And further, in exercise of the power conferred by sub-section (*1*) of section 42 of the same Act, I hereby appoint the Inspector of Co-operative Societies, Balurghat, to be liquidator of the said society.

No. 9-L.—7th August 1931.—Whereas I am of opinion, as the result of an enquiry held into the constitution, working and financial condition of the Tita Hazra Joutha Bank (registered No. 220 of 1925), in the subdivision Sadar in the district of Noakhali, under sub-section (*1*) of section 35 of the Co-operative Societies Act, II of 1912, that the society ought to be dissolved.

Now, therefore, in exercise of the power conferred by sub-section (*1*) of section 39 of the same Act, I hereby cancel the registration of the said society.

And further, in exercise of the power conferred by sub-section (*1*) of section 42 of the same Act, I hereby appoint the Departmental Officer in charge of Noakhali Sadar Circle to be liquidator of the said society.

No. 10-L.—7th August 1931.—Whereas I am of opinion, as the result of an enquiry held into the constitution, working and financial condition of the Paschim Char Fakira Joutha Bank (registered No. 228 of 1925), in the subdivision Sadar in the district of Noakhali, under sub-section (*1*) of section 35 of the Co-operative Societies Act, II of 1912, that the society ought to be dissolved.

Now, therefore, in exercise of the power conferred by sub-section (*1*) of section 39 of the same Act, I hereby cancel the registration of the said society.

And further, in exercise of the power conferred by sub-section (*1*) of section 42 of the same Act, I hereby appoint the Departmental Officer in charge of Netrokona Sadar Circle to be liquidator of the said society.

No. 11-L.—10th August 1931.—Whereas I am of opinion, as the result of an enquiry held into the constitution, working and financial condition of the Majura Tantubai Samiti (registered No. 598 of 1923), in the subdivision Sadar in the district of Bankura, under sub-section (*1*) of section 35 of the Co-operative Societies Act, II of 1912, that the society ought to be dissolved.

Now, therefore, in exercise of the power conferred by sub-section (*1*) of section 39 of the same Act, I hereby cancel the registration of the said society.

And further, in exercise of the power conferred by sub-section (*1*) of section 42 of the same Act, I hereby appoint the Inspector of Industrial Co-operative Societies, Bankura, to be liquidator of the said society.

No. 12-L.—11th August 1931.—Whereas I am of opinion, as the result of an enquiry held into the constitution, working and financial condition of the Bishnudy Joutha Bank (registered No. 405 of 1913), in the subdivision Chandpur in the district of Tippera, under sub-section (*1*) of section 35 of the Co-operative Societies Act, II of 1912, that the society ought to be dissolved.

Now, therefore, in exercise of the power conferred by sub-section (*1*) of section 39 of the same Act, I hereby cancel the registration of the said society.

And further, in exercise of the power conferred by sub-section (*1*) of section 42 of the same Act, I hereby appoint the Departmental Officer in charge of Chandpur Circle to be liquidator of the said society.

No. 8526.—17th August 1931.—In modification of this office notification No. 152-L., dated the 11th May 1929, so far as it relates to the appointment of the Special Liquidation Supervisor, Rangpur, as liquidator of the Radhakrishnapore Gramya Bank (registered No. 662 of 1917), in the district of Rangpur, I appoint the Auditor of Co-operative Societies in charge of liquidation work, Rangpur, as liquidator of the said society.

No. 8527.—17th August 1931.—In modification of this office notification No. 4-L., dated the 5th July 1928, so far as it relates to the appointment of the Special Liquidation Supervisor, Rangpur, as liquidator of the Aleykishamat Joutha Bank (registered No. 62 of 1918), in the district of Rangpur, I appoint the Auditor of Co-operative Societies in charge of liquidation work, Rangpur, as liquidator of the said society.

No. 8528.—17th August 1931.—In modification of this office notification No. 116-L., dated the 10th April 1930, so far as it relates to the appointment of the Special Liquidation Supervisor, Rangpur, as liquidator of the Durgapur Gramya Bhander (registered No. 426 of 1914), in the district of Rangpur, I appoint the Auditor of Co-operative Societies in charge of liquidation work, Rangpur, as liquidator of the said society.

No. 8529.—17th August 1931.—In modification of this office notification No. 79-L., dated the 20th February 1930, so far as it relates to the appointment of the Special Liquidation Supervisor, Rangpur, as liquidator of the Palipara Mashimpur Gramya Co-operative Bank (registered No. 875 of 1917), in the district of Rangpur, I appoint the Auditor of Co-operative Societies in charge of liquidation work, Rangpur, as liquidator of the said society.

No. 8530.—17th August 1931.—In modification of this office notification No. 54-L., dated the 4th October 1929, so far as it relates to the appointment of the Special Liquidation Supervisor, Rangpur, as liquidator of the Buzruk Ruhea Bandhab Samity (registered No. 91 of 1913), in the district of Rangpur, I appoint the Auditor, Co-operative Societies, in charge of liquidation work, Rangpur, as liquidator of the said society.

No. 8531.—17th August 1931.—In modification of this office notification No. 153-L., dated the 11th May 1929, so far as it relates to the appointment of the Special Liquidation Supervisor, Rangpur, as liquidator of the Sankardaha Joutha Samity (registered No. 14 of 1919), in the district of Rangpur, I appoint the Auditor of Co-operative Societies in charge of liquidation work, Rangpur, as liquidator of the said society.

No. 8532.—17th August 1931.—In modification of this office notification No. 148-L., dated the 11th May 1929, so far as it relates to the appointment of the Special Liquidation Supervisor, Rangpur, as liquidator of the Kolkonda Uttarpara Joutha Bank (registered No. 880 of 1917), in the district of Rangpur, I appoint the Auditor of Co-operative Societies in charge of liquidation work, Rangpur, as liquidator of the said society.

No. 8533.—17th August 1931.—In modification of this office notification No. 149-L., dated the 11th May 1929, so far as it relates to the appointment of the Special Liquidation Supervisor, Rangpur, as liquidator of the Sreerampur Gramya Co-operative Bank (registered No. 118 of 1918), in the district of Rangpur, I appoint the Auditor of Co-operative Societies in charge of liquidation work, Rangpur, as liquidator of the said society.

No. 8534.—17th August 1931.—In modification of this office notification No. 150-L., dated the 11th May 1929, so far as it relates to the appointment of the Special Liquidation Supervisor, Rangpur, as liquidator of the Pirjabad Uttarpara Rindan Samiti (registered No. 367 of 1917), in the district of Rangpur, I appoint the Auditor of Co-operative Societies in charge of liquidation work, Rangpur, as liquidator of the said society.

No. 8535.—17th August 1931.—In modification of this office notification No. 151-L., dated the 11th May 1929, so far as it relates to the appointment of the Special Liquidation Supervisor, Rangpur, as liquidator of the Damodarpur Rindan Samity (registered No. 42 of 1917), in the district of Rangpur, I appoint the Auditor of Co-operative Societies in charge of liquidation work, Rangpur, as liquidator of the said society.

No. 8536.—17th August 1931.—In modification of this office notification No. 18-L., dated the 18th August 1926, so far as it relates to the appointment of the Special Liquidation Supervisor, Rangpur, as liquidator of the Chabbish Hazari Co-operative Bank (registered No. 290 of 1916), in the district of Rangpur, I appoint the Auditor of Co-operative Societies in charge of liquidation work, Rangpur, as liquidator of the said society.

No. 8537.—17th August 1931.—In modification of this office notification No. 34-L., dated the 25th August 1928, so far as it relates to the appointment of the Special Liquidation Supervisor, Rangpur, as liquidator of the Kolkonda Dakshinpara Joutha Bank (registered No. 876 of 1917), in the district of Rangpur, I appoint the Auditor of Co-operative Societies in charge of liquidation work, Rangpur, as liquidator of the said society.

No. 8538.—17th August 1931.—In modification of this office notification No. 8669, dated the 23rd June 1922, so far as it relates to the appointment of the Special Liquidation Supervisor, Rangpur, as liquidator of the Pirjabad Rindan Samiti (registered No. 201 of 1916), in the district of Rangpur, I appoint the Auditor of Co-operative Societies in charge of liquidation work, Rangpur, as liquidator of the said society.

No. 8539.—17th August 1931.—In modification of this office notification No. 156-L., dated the 11th May 1929, so far as it relates to the appointment of the Special Liquidation Supervisor, Rangpur, as liquidator of the Shibpur Purbapara Rindan Samiti (registered No. 5 of 1922), in the district of Rangpur, I appoint the Auditor of Co-operative Societies in charge of liquidation work, Rangpur, as liquidator of the said society.

No. 8540.—17th August 1931.—In modification of this office notification No. 154-L., dated the 11th May 1929, so far as it relates to the appointment of the Special Liquidation Supervisor, Rangpur, as liquidator of the Ganeshpur Rindan Samity (registered No. 259 of 1923), in the district of Rangpur, I appoint the Auditor of Co-operative Societies in charge of liquidation work, Rangpur, as liquidator of the said society.

No. 8541.—17th August 1931.—In modification of this office notification No. 155-L., dated the 11th May 1929, so far as it relates to the appointment of the Special Liquidation Supervisor, Rangpur, as liquidator of the Damodarpur Purbapara Joutha Bank (registered No. 51 of 1918), in the district of Rangpur, I appoint the Auditor of Co-operative Societies in charge of liquidation work, Rangpur, as liquidator of the said society.

No. 8542.—17th August 1931.—In modification of this office notification No. 17-L., dated the 2nd August 1930, so far as it relates to the appointment of the Special Liquidation Supervisor, Rangpur, as liquidator of the Kolkanda Gramya Co-operative Bank (registered No. 622 of 1917), in the district of Rangpur, I appoint the Auditor of Co-operative Societies in charge of liquidation work, Rangpur, as liquidator of the said society.

No. 8543.—17th August 1931.—In modification of this office notification No. 115-L., dated the 10th April 1930, so far as it relates to the appointment of the Special Liquidation Supervisor, Rangpur, as liquidator of the Haribhanga Gramya Bhander (registered No. 339 of 1914), in the district of Rangpur, I appoint the Auditor of Co-operative Societies in charge of liquidation work, Rangpur, as liquidator of the said society.

No. 8544.—17th August 1931.—In modification of this office notification No. 158-L., dated the 11th May 1929, so far as it relates to the appointment of the Special Liquidation Supervisor, Rangpur, as liquidator of the Shibpur Madhyapara Rindan Samiti (registered No. 167 of 1916), in the district of Rangpur, I appoint the Auditor of Co-operative Societies in charge of liquidation work, Rangpur, as liquidator of the said society.

No. 8545.—17th August 1931.—In modification of this office notification No. 157-L., dated the 11th May 1929, so far as it relates to the appointment of the Special Liquidation Supervisor, Rangpur, as liquidator of the Gopinathpur Joutha Bank (registered No. 9 of 1919), in the district of Rangpur, I appoint the Auditor of Co-operative Societies in charge of liquidation work, Rangpur, as liquidator of the said society.

No. 8546.—17th August 1931.—In modification of this office notification No. 9-L., dated the 13th July 1929, so far as it relates to the appointment of the Special Liquidation Supervisor, Rangpur, as liquidator of the Ichli Joutha Samity (registered No. 192 of 1921), in the district of Rangpur, I appoint the Auditor, Co-operative Societies in charge of liquidation work, Rangpur, as liquidator of the said society.

No. 8547.—17th August 1931.—In modification of this office notification No. 46-L., dated the 13th February 1927, so far as it relates to the appointment of the Special Liquidation Supervisor, Rangpur, as liquidator of the Gotamari Gramya Joutha Bank (registered No. 448 of 1914), in the district of Rangpur, I appoint the Auditor of Co-operative Societies in charge of liquidation work, Rangpur, as liquidator of the said society.

S. K. GANGULY,

Regr., Co-operative Societies, Bengal.

REVENUE DEPARTMENT.

Land Revenue.

NOTIFICATIONS.

Bakarganj.—No. 9757L.R. — 10th August 1931.—Under the provisions of section 3 (*14*) of the Bengal Tenancy Act, 1885 (Act VIII of 1885), Maulvi Abdul Aziz Akhand, Kanungo, acting as Khas Mahal Circle Officer in the district of Bakarganj, is authorized to discharge in that district the functions of a Revenue Officer under Chapter X of that Act, so far as they relate to surveys and preparation of records-of-right.

No. 9762L.R. — 10th August 1931.—In exercise of the power conferred by sub-section (*6*) of section 190 of the Bengal Tenancy Act, 1885 (VIII of 1885), the Governor in Council is pleased to direct that the following amendment be made in the rules published under notification No. 5462L.R., dated the 26th March 1929, at pages 549-592 in Part I of the *Calcutta Gazette* of the 28th idem:—

Amendment.

Add the following at the end of sub-rule (*3*) in rule 29:—

"If an acknowledgment for the notice sent by registered post cannot be obtained the notice shall be served by affixing a copy in the office of the Collector for a period of one month, and such notice shall thereupon be deemed to have been duly served."

Malda.—No. 10026 L.R.—17th August 1931.—Under the provisions of section 3(*14*) of the Bengal Tenancy Act, 1885 (Act VIII of 1885), Babu Sudhansu Ranjan De, Sub-Deputy Collector, is authorised to discharge, in the district of Malda, the functions of a Revenue Officer, under Chapter X of that Act, so far as they relate to surveys and the preparation of record-of-rights.

He is also vested with the powers of an Assistant Settlement Officer, under Chapter VII, Part I, of the rules under the Bengal Tenancy Act, in respect of the aforesaid area.

Malda.—No. 10027 L.R.—17th August 1931. —In exercise of the powers conferred by section 3 of the Bengal Land Revenue Settlement Regulations, 1825 (IX of 1825), read with section 20 of the Bengal Land Revenue Settlement Regulation, 1822 (VII of 1822), the Governor in Council is pleased to vest Babu Sudhansu Ranjan De, Sub-Deputy Collector and Assistant Settlement Officer, Malda, who has, by notification No. 7331 C.P., dated the 21st July 1931, been vested by the Board of Revenue with the powers of a Collector in the Mathurapur Estate, in the district of Malda, for the purpose of the work of maintenance of the record-of-rights of that estate, with powers under section 19 of the said Bengal Land Revenue Settlement Regulation, 1822, within the local limits of that estate, to require and compel persons mentioned in the section to attend and produce accounts and other papers and to examine such persons under that section for the purposes of the said work of the maintenance of the record-of-rights.

Malda-Rangpur.—No. 10031 L.R.—17th August 1931.—Under the provisions of section 3(*14*) of the Bengal Tenancy Act, 1885 (Act VIII of 1885), Babu Nalini Prosanna Gupta, Settlement Kanungo and Technical Adviser, Malda Major Settlement operations, is also authorised to discharge, in the district of Rangpur, the functions of a Revenue Officer, under Chapter X of that Act, so far as they relate to surveys and the preparation of record-of-rights.

He is also vested with the powers of an Assistant Settlement Officer, under Chapter VII, Part I, of the rules under the Bengal Tenancy Act, in respect of the aforesaid area.

Faridpur.—No. 10033 L.R.—17th August 1931.—In exercise of the powers conferred by sub-section (*3*) of section 158(A) of the Bengal Tenancy Act, 1885 (VIII of 1885), the Governor in Council is pleased to vest Babu Gyanendra Nath Banerjee, Deputy Collector, Faridpur (Sadar), with the powers to perform the functions of a Certificate Officer under the Public Demands Recovery Act, 1913, for the purposes of the said section, and in respect of the recovery of arrears of rent (including cesses) due to the estates of (*i*) Maharaja Sir Pradyot Kumar Tagore, Kt., (*ii*) Srimati Krishna Pramoda Dasi, and (*iii*) late Babu Amrita Nath Das, in the district of Faridpur.

Land Acquisition.

NOTIFICATIONS.

Chittagong.—No. 9797L.A.—10th August 1931.—Whereas it appears to the Governor in Council that land is likely to be required to be taken by Government at the expense of the Chittagong Municipality for a public purpose, viz., for widening the Chaktai Road in the village of Bakalia, thana Panchalaish, zilla Chittagong, it is hereby notified that for the above purpose a piece of land measuring, more or less, 0·009 of an acre, covering part of cadastral survey plot No. 3352, is likely to be required within the aforesaid village of Bakalia.

This notification is made, under the provisions of section 4 of Act I of 1894, to all whom it may concern.

In exercise of the powers conferred by the aforesaid section, the Governor in Council is pleased to authorise the officers for the time being engaged in the undertaking, with their servants and workmen, to enter upon and survey the land and do all other acts required or permitted by that section.

Any person interested in the above land, who has any objection to the acquisition thereof, may, within thirty days after the date on which public notice of the substance of this notification is given in the locality, file an objection in writing before the Collector of Chittagong.

Tippera.—No. 10002L.A.—17th August 1931.—The Governor in Council is pleased to cancel the notification No. 13889L.A., dated 27th November 1930, under section 4 of the Land Acquisition Act, I of 1894, published at page 1920, Part I of the *Calcutta Gazette* of the 4th December 1930, in respect of the proposed acquisition of ·019 of an acre of land required by the Chandpur Municipality for laying pipes in connection with the North Chandpur Waterworks at Chandpur in the village of Bishnudi within municipal area, pargana Purchandi, zilla Tippera.

Burdwan.—No. 10014L.A.—17th August 1931.—Whereas it appears to the Governor in Council that land is likely to be required to be taken by Government at the public expense for a public purpose, viz., for constructing distributary No. 7, Main Canal, Damodar Canal Project, in the villages of Charul, Yusufabad, Rahamannagar or

Nababerhat and Katra or Korrapota, jurisdiction list Nos. 24, 21, 22, and 19, respectively, thana Burdwan, pargana Burdwan, district Burdwan, it is hereby notified that for the above purpose a piece of land measuring, more or less, 3·75 acres, commencing on the southern side of the Grand Trunk Road at chainage 506 feet from the zero point which is at chainage 71,810 feet 6 inches on the eastern boundary of Reach No. VII of the Main Canal and proceeding towards the east through mauzas Charul and Yusufabad up to chainage 2,100 feet, then forming three curves up to chainage 2,699 feet, then proceeding through mauzas Yusufabad and Rahamannagar or Nababerhat towards the east up to chainage 4,718 feet, then proceeding through mauzas Rahmannagar or Nababerhat and Katra or Korrapota towards the south up to chainage 7,300 feet, and finally towards the south-east, terminating at chainage 8,345 feet, varying in width from 20 feet to 79 feet 5 inches and being 7,839 feet in length, is likely to be required within the aforesaid villages of Charul, Yusufabad, Rahamannagar or Nababerhat and Katra or Korrapota.

This notification is made, under the provisions of section 4, of Act I of 1894, to all whom it may concern.

A plan of the land may be inspected in the office of the Special Land Acquisition Deputy Collector, Burdwan, as well as in that of the Executive Engineer, Damodar Canal Division, Burdwan.

In exercise of the powers conferred by the aforesaid section, the Governor in Council is pleased to authorise the officers for the time being engaged in the undertaking, with their servants and workmen, to enter upon and survey the land and do all other acts required or permitted by that section.

Any person interested in the above land, who has any objection to the acquisition thereof, may, within thirty days after the date on which public notice of the substance of this notification is given in the locality, file an objection in writing before the Collector of Burdwan.

24-Parganas. No. 10017L.A.—17th August 1931.—The Governor in Council is pleased to cancel the notification No. 289L.A., dated the 10th January 1931, under section 4 of the Land Acquisition Act, I of 1894, published at page 63, Part I of the *Calcutta Gazette* of the 15th idem, in respect of the proposed acquisition of land required for the extension of Hukumchand Jute Mill sidings on the Eastern Bengal Railway, in the villages of Hazinagar and Barul, jurisdiction list Nos. 22 and 16, thana Naihati, pargana Habilshahar, district 24-Parganas.

Burdwan.—No. 9899L.A. — 13th August 1931. — In exercise of the powers conferred by section 48 (*1*) of the Land Acquisition Act, I of 1894, the Governor in Council is pleased to withdraw from the acquisition of a piece of land measuring, more or less, 0·17 of an acre in the village of Mirzapur bounded as described below out of the 2·89 acres of land notified for acquisition under declaration No. 14379L.A., dated the 5th December 1930, published at page 1974, Part I of the *Calcutta Gazette* of the 11th idem, as amended by Erratum No. 9896 L.A., dated the 13th August 1931, and required for the construction of the 3rd, 4th and 5th miles (up to 4,962 feet) of distributary No. 6, Main Canal, Damodar Canal Project, in the villages of Saraitikar, etc., parganas Burdwan and Sahabad, district Burdwan:—

Boundaries

North—By the land of Nuthmal Set and others and Dinatarini Dasi

East—By the land of Dinatarini Dasi.

South—By the land of Priambada Debi.

West—By the land of Nuthmal Set and others.

ERRATA.

24-Parganas.—No. 9905L.A.—13th August 1931.—In line 11 of the notification No. 2909-L.A., dated the 23rd February 1931, published at pages 254-255, Part I, of the *Calcutta Gazette* of the 26th idem, in respect of the proposed acquisition of land required for a splinter proof at Jaffarpore Rifle Range in the village of Telinipara, jurisdiction list No. 10, thana Tittagarh, pargana Calcutta, district 24-Parganas, for the area "0·574 of an acre" *read* "0·0574 of an acre."

Hooghly.—No. 10008L.A.—17th August 1931.—In line 31 of the notification No. 13727L.A., dated the 24th November 1930, under section 4 of the Land Acquisition Act, published at pages 1858-59, Part I of the *Calcutta Gazette* of the 27th idem, in respect of the acquisition of land required for the construction of a regulator over the Kana Damodar in the villages of Kishannagar and Jagarnathpur, thana Jangipara, district Hooghly, *add* "and khas waste land of Burdwan Raj" *after* the word "Damodar."

DECLARATIONS.

24-Parganas.—No. 9908L.A.—13th August 1931.—Whereas it appears to the Governor in Council that land is required to be taken by Government at the public expense for a public purpose, viz., for a splinter proof at Jaffarpore Rifle Range, in the village of Telinipara, jurisdiction list No. 10, thana Tittagarh, pargana Calcutta, zilla 24-Parganas, it is hereby declared that for the above purpose a piece of land measuring, more or less, 0·0574 of an acre, bounded on the—

North—By the lands of Jamet Ali and Majet Ali Mondal,

East—By the lands of Kanai Biswas, Jamet Ali and Majet Ali Mondal,

South—By the lands of Kalu Mondal and Kanai Biswas,

West—By the lands of Jamet Ali, Majet Ali Mondal and Kalu Mondal,

is required within the aforesaid village of Telinipara.

This declaration is made, under the provisions of section 6, Act I of 1894, to all whom it may concern.

A plan of the land may be inspected in the office of the Royal Engineer, Presidency and Assam District.

Hooghly.—No. 10005L.A.—17th August 1931.—Whereas it appears to the Governor in Council that land is required to be taken by Government at the public expense for a public purpose, viz., for the construction of a regulator over the Kana Damodar in the villages of Krishannagar and Jagarnathpur, jurisdiction list Nos. 66 and 74, respectively, in thana Jangipara, pargana Baligori, district Hooghly, it is hereby declared that for the above purpose two pieces of land measuring, more or less, 1·194 acres bounded on the—

Block A:

North and West—By tank and embankment of Satish Chandra Paramanik and Rajani Kanto Paramanik,

East—By bamboo and mango garden of Shaikh Kabiruddin, Shaikh Wajed Ali and Shaikh Sadu,

South—By the Kana Damodar,

Block B:

North—By khas waste land of Burdwan Raj, the Kana Damodar and khas patit lands of Surendranath and Dhan Krista Biswas,

East—By the Kana Damodar, khas patit lands of Surendranath and Dhan Krista Biswas and patit land of Kunja Behari De,

South—By patit land of Kunja Behari De, Bejoy Krista Karmakar, Jiban Majhi and Panchanan Karmakar,

West—By patit land of Panchanan Karmakar and the Kana Damodar, and khas waste land of Burdwan Raj,

are required within the aforesaid villages of Kishannagar and Jagarnathpur.

This declaration is made, under the provisions of section 6, Act I of 1894, to all whom it may concern.

A plan of land may be inspected in the office of the Land Acquisition Officer, Serampore.

Chittagong.—No. 10011L.A.—17th August 1931.—Whereas it appears to the Governor in Council that additional land is required to be taken by Government at the expense of the Chittagong Port Commissioners for a public purpose, viz., for the port revetment, section VI, in the village of Patenga, thana Double Moorings, district Chittagong, it is hereby declared that for the above purpose a piece of land measuring, more or less, 16·3 acres and covering parts of cadastral survey plots Nos. 13145, 13152, 13153, 13154, 13155, 13159, 13068, 13192, 13190, 13193, 13202, 13201, 13200, 13217, 13218, 13219, 13220, 13221, 13225, 13228, 13229, 13232, 22, 35, 34, 32, 21, 31, 30, 29, 28, 26, 25, 24, 23, 13243, 17, 13843, 13914, 16, 13913, 13912, 13904 and 15 is required within the aforesaid village of Patenga.

This declaration is made, under the provisions of section 6, Act I of 1894, to all whom it may concern.

A plan of the land may be inspected in the office of the Collector of Chittagong.

Mymensingh.—No. 10020L.A.—17th August 1931.—Whereas it appears to the Governor in Council that land is required to be taken by Government at the public expense for a public purpose, viz., for the improved siding facilities at Moshakhali Railway Station of the Eastern Bengal Railway, in the villages of Moshakhali and Daricharbaria, in thana Gafargaon, pargana Ranbhawal, district Mymensingh, it is hereby declared that for the above purpose a piece of land comprising parts of cadastral plots Nos. 2015, 2016, 2017 and 2003 of mauza Moshakhali and parts of plots Nos. 207, 208 and 209 of mauza Daricharbaria, and measuring, more or less, 0·278 of an acre, bounded on the—

North—By the remaining part of settlement plot No. 209 of mauza Daricharbaria,

East—By the Eastern Bengal Railway land,

South—By the part of settlement plot No. 2015 of mauza Moshakhali,

West—By the parts of settlement plots Nos. 2015, 2016, 2017, 2003 of mauza Moshakhali and parts of settlement plots Nos. 207, 208 and 209 of mauza Daricharbaria,

is required within the aforesaid villages of Moshakhali and Daricharbaria.

This declaration is made, under the provisions of section 6, Act I of 1894, to all whom it may concern.

A plan of the land may be inspected in the office of the Collector of Mymensingh.

Burdwan.—No. 10023L.A.—17th August 1931.—Whereas it appears to the Governor in Council that land is required to be taken by Government at the public expense for a public purpose, viz., for constructing Golgram drainage cut in connection with the Damodar Canal Project in the village of Golgram, jurisdiction list No. 132, in thana Galsi, pargana Burdwan, district Burdwan, it is hereby declared that for the above purpose a piece of land measuring, more or less, 1·18 acres, commencing from chainage 0, being the point at the south of the Main Canal at its chainage 72,323 feet and running generally towards south-west through mauza Golgram and terminating at chainage 1,098 feet of the drainage cut at a point at the north of the Grand Trunk Road, varying in width from 30 feet to 50 feet and being 1,098 feet in length, is required within the aforesaid village of Golgram.

This declaration is made, under the provisions of section 6, Act I of 1894, to all whom it may concern.

A plan of the land may be inspected in the office of the Special Land Acquisition Deputy Collector, Burdwan, as well as in that of the Executive Engineer, Damodar Canal Division, Burdwan.

ERRATUM.

Burdwan.—No. 9896L.A. — 13th August 1931.—In lines 8 and 9 of the declaration No. 14379L.A., dated the 5th December 1930, under section 6 of the Land Acquisition Act, I of 1894, published at page 1974, Part I of the *Calcutta Gazette* of the 11th idem, in respect of the land required by the Irrigation Department, for constructing the 3rd, 4th and

5th miles (up to 4,962 feet) of distributary No. 6, Main Canal, Damodar Canal Project, in the district of Burdwan, *for* "villages of Mirzapur and Royan" *read* "villages Saraitikar, Mirzapur and Royan," and in line 10 of the same declaration in the place of "thana Saraitikar" *read* "thana Burdwan."

H. C. V. PHILPOT,
Secy. to the Govt. of Bengal.

IRRIGATION DEPARTMENT.

Irrigation.

NOTIFICATION.

No. 161.—17th July 1931.—The following draft of amendments, which, in exercise of the powers conferred by sections 6 and 11 of the Canals Act, 1864 (Bengal Act V of 1864), the Governor in Council intends to make, in the rules and schedule of rates of tolls for the Rampur Bil Khal joining the Gazipur Khal at Gazipur and Chechri on the north and Amua Done at Amua on the south in the district of Bakarganj (published in Bengal Government notification No. 131., dated the 7th April 1931, at pages 450-51, Part I of the *Calcutta Gazette* of the 16th idem), is hereby published for the information of persons likely to be affected thereby.

2. The draft will be taken into consideration on or after the 10th September 1931, and any objections or suggestions received by the undersigned before that date will be considered:—

Draft amendments.

Schedule of rates of tolls.

Insert the words "and Chechri" after the words "at Amua" at the end of the last line of rule 12 of the said rules.

H. C. V. PHILPOT,
Secy. to the Govt. of Bengal.

HIGH COURT NOTICE.

Civil.

The 11th August 1931.

No. 10681A. — Babu Naresh Chandra Chakrabatti, No. 1, additional munsif of Faridpur and Madaripur, employed at Madaripur, is vested with the powers of a Judge of a Court of Small Causes for the trial of suits cognizable by such a Court up to the value of Rs. 100 within the local limits of the Madaripur munsifi.

By order of the High Court,
W. McC. SHARPE, *Registrar.*

ORDERS BY COMMISSIONERS OF DIVISIONS.

Burdwan Division—Chinsura.

No. 1111M.—8th August 1931.—It is hereby notified for general information that the next general election of Commissioners of the Hooghly-Chinsura Municipality in the district of Hooghly will be held on Sunday, the 20th March 1932.

No. 1582L.S.-G.—8th August 1931.—It is hereby notified for general information that, under rule 20 (*b*), read with rule 23 of the rules for the management of charitable hospitals and dispensaries in Bengal, Babu Satyendra Kumar Roy has been appointed to be a member of the committee for the management of the charitable dispensary at Dwarka in the district of Birbhum, *vice* Babu Abinash Chandra Roy, deceased.

No. 2360J.G.—8th August 1931.—In accordance with the provision of rule 63 (*2*) of Chapter IV of the Bengal Jail Code, I hereby appoint Babu Santi Mohan Ghosh, Medical Officer of the Raniganj Leper Asylum, and reappoint Mrs. H. E. Dewy, wife of Reverend Dewy, Wesleyan Minister, Asansol, to be non-official visitors of the Asansol Subsidiary Jail in the district of Burdwan for a period of two years from the date of this notification.

No. 1588L.S.-G.—10th August 1931.—It is hereby notified for general information that, under rule 20 (*b*) of the rules for the management of charitable hospitals and dispensaries in Bengal, the following gentlemen have been appointed to be members of the committee for the management of the Amaragori Iswar Charitable Dispensary in the district of Howrah:—

The Subdivisional Officer, Uluberia.
The President of the Jhikra union board.
Babu Jogendra Nath Hazra.
Babu Radha Gobinda Mallick.
Babu Ambika Charan Roy.
Babu Amarendra Nath Roy, B.L.
Babu Radhika Prosad Pandit.
Munshi Irshad Ali.
Rai Sahib Dr. Probodh Chandra Roy.
Babu Akhil Chandra Roy.
Babu Surendranath Mallick.
Munshi Rahat Ali.

No. 1591L.S.-G.—10th August 1931.—It is hereby notified for general information that, under rule 20 (*b*) of the rules for the management of charitable hospitals and dispensaries in Bengal, the following gentlemen have been appointed to be members of the committee for the management of the charitable dispensary at Amta in the district of Howrah:—

The Subdivisional Officer, Uluberia.
The Circle Officer, Amta.
The President, Amta union board.
The President, Gazipur union board.
Babu Krishnadhone Sinha, B.L.
Babu Nanda Lal Sarkhal.
Babu Kishori Mohan Roy.
Babu Amarendra Nath Roy, B.L.
Dr. Pulin Ranjan Bose, M.B.
Babu Surendra Nath Chakravarty, B.L.
Babu Provakar Mukherjee, B.L.

No. 1594L.S.-G.—10th August 1931.—It is hereby notified for general information that, under rule 20 (*b*) of the rules for the management of charitable hospitals and dispensaries in Bengal, the following gentlemen have been appointed to be members of the committee for the management of the Barda Jnanada Moyee Charitable Dispensary in the district of Howrah:—

Babu Bansari Mohan Koley.
The Circle Officer, Amta.
Babu Panchanan Chongdar.
The President, Gar-Bhawanipur union board.
Babu Ashutosh Mondal, B.A.
Babu Kishori Mohan Das.
Babu Jagat Behari Bhattacharjee.
Babu Kamal Krishna Shee.
The Head Master, Gar-Bhawanipur R. P. Institution.

No. 1597L.S.-G.—10th August 1931.—It is hereby notified for general information that, under rule 20 (*b*) of the rules for the management of charitable hospitals and dispensaries in Bengal, the following gentlemen have been appointed to be members of the committee for the management of the Joypur Jajneswar Charitable Dispensary in the district of Howrah:—

The Subdivisional Officer, Uluberia.
Babu Manmatha Nath Bose.
Babu Srish Chandra Bose.
Babu Hari Mohan Bag.
The President, Joypur union board.
Babu Kanai Lal Mandal.
Babu Amulya Charan Dhara.
The Head Master, Joypur P. D. Institution.
Shaik Mohammad Yakub.
Shaik Ashun Mullick.

No. 1600L.S.-G.—10th August 1931.—It is hereby notified for general information that, under rule 20 (*b*) of the rules for the management of charitable hospitals and dispensaries in Bengal, the following gentlemen have been appointed to be members of the committee for the management of the charitable dispensary at Singti in the district of Howrah:—

The Circle Officer, Amta.
The President, Singti union board.
Babu Bhupati Charan Singha.
Babu Sajani Kanta Ghosal, B.A.
Babu Butto Krishna Ganguly, B.A.
Babu Anukul Chandra Bhattacharjee.
Babu Raj Krishna Senapati.
Babu Bepin Bihari Banerjee.
Babu Bishnu Pada Chhari.
The President, Debipur union board.
Dr. Prollad Chandra Bhat, L.M.F.
Babu Bhola Nath Chaudhuri, B.A.

No. 1603L.S.-G.—10th August 1931.—It is hereby notified for general information that, under rule 20 (*b*) of the rules for the management of charitable hospitals and dispensaries in Bengal, the following gentlemen have been appointed to be members of the committee for the management of the charitable dispensary at Shyampur in the district of Howrah:—

The Subdivisional Officer, Uluberia.
The Sub-Registrar, Shyampur.
The Senior Sub-Inspector of Police.
The President, Khuruberia union board.
The President, Shyampur union board.
Babu Joy Krishna Samanta.
The President, Baneswarpur union board.
Babu Jyotish Chandra Bag, B.A., B.T.
Babu Dwarikanath Pakhira, B.A.
Babu Sripati Charan Roy.
Babu Krittibas Jana.
Munshi Kasim Uddin.

No. 1606L.S.-G.—10th August 1931.—It is hereby notified for general information that, under rule 20 (*b*) of the rules for the management of charitable hospitals and dispensaries in Bengal, the following gentlemen have been appointed to be members of the committee for the management of the charitable dispensary at Bagnan in the district of Howrah:—

The Subdivisional Officer, Uluberia.
The President, Bagnan union board.
The President, Kalayanpur union board.
The President, Bainan union board.
The President, Bangalpur union board.
The President, Bantul union board.
The President, Benapur union board.
Babu Purna Chandra Bhattacharjee.
Babu Girija Bhusan Bose.
Babu Nani Lal Mitter.
Babu Satish Chandra Sen.
Maulvi Wahedul Huq.

No 1615L.S.-G.—12th August 1931.—It is hereby notified for general information that, under rule 20 (*b*) of the rules for the management of charitable hospitals and dispensaries in Bengal, the following gentlemen have been appointed to be members of the committee for the management of the charitable dispensary at Mohiary in the district of Howrah:—

Subdivisional Officer, Sadar.
The President, Andul union board.
The President, Mohiary union board.
Babu Charu Chandra Paul.
S. P. Roy, Esq., Bar.-at-Law.
A. P. Roy, Esq.
Dr. Tincowri Ghosh, M.B.
Dr. Bhudhendra Nath Mukherjee, M.B.
Babu Pancheowri Chakravarty.
Babu Anukul Chandra Paul.
Babu Jyotish Chandra Chakravarty, B.L.
Babu Probodh Chandra Chatterjee.

L. B. BURROWS, *Commissioner (offg.)*.

Burdwan, the 8th August 1931.

It is hereby notified for general information that, under section 13 of the Bengal Village Self-Government Act, 1919 (Bengal Act V of 1919), read with rule 36 of the rules for the election and appointment of members of union board, etc., Babu Barendra Krishna Bose has been appointed by me to be a member of the Jaugram union board in police-station Jamalpur in the district of Burdwan, *vice* Babu Sasi Bhusan Chatterjee, deceased.

Burdwan, the 12th August 1931.

It is hereby notified for general information that a general election will be held for the appointment of three gentlemen under section 3 (*2*) and one under section 3 (*3*) of the Bengal Mining Settlement Act II of 1912 as members of the Asansol Mines Board of Health. The votes will be counted at 11 a.m. on the 30th day of September 1931, at the office of the District Magistrate of Burdwan.

The voting papers which will be issued by the undersigned to all registered mine-owners and receivers of royalties from coal mines should duly be filled up and forwarded so as to reach the office of the District Magistrate, Burdwan, on or before the 28th day of September 1931. The voting papers will be issued on the 31st August 1931.

H. C. Bose, *District Magistrate (offg.)*.

Chittagong Division—Chittagong.

No. 2999G.—8th August 1931.—Maulvi Muhammad Ali Husain Bhuiyan, Sub-Deputy Collector, on leave, who has been posted to this division in Government notification No. 6129A., dated the 23rd July 1931, is posted to the headquarters station of the Noakhali district to work as Circle Officer, in place of Maulvi Mujibar Rahman, who is placed on general duties.

No. 3004G.—8th August 1931.—Babu Anadi Nath Sarkar, Sub-Deputy Collector, who has been posted to this division in Government notification No. 6877A., dated the 30th July 1931, is posted to the headquarters station of the Tippera district on general duties.

No. 3013G.—8th August 1931.—It is hereby notified for general information that Friday, the 19th February 1932, is fixed for holding the next general election of the Commissioners of the Brahmanbaria Municipality in the district of Tippera.

No. 3116 G.—15th August 1931.—It is hereby notified for general information that, under section 19 of the Bengal Local Self-Government Act, III (B.C.) of 1885, Maulvi Sadaqut Ullah has been duly elected as member of the Chittagong district board by the Sadar local board, Chittagong, *vice* Maulvi Farok Ahmed, resigned.

W. H. Nelson, *Commissioner*.

Dacca Division—Dacca.

No. 4102J.—12th August 1931.—Babu Hem Chandra Sen, Sub-Deputy Collector, Mymensingh, was allowed leave on average pay for eight days, under rule 81 (*b*) (*ii*) of the Fundamental Rules, with effect from the 1st August 1931.

No. 4107J.—12th August 1931.—Babu Birendra Lal Gupta, Sub-Deputy Collector, who has been transferred to the Dacca Division in Government notification No. 7066A., dated the 7th August 1931, is posted to the headquarters station of the district of Mymensingh on general duty.

No. 4114J.—12th August 1931.—It is hereby notified for general information that a by-election will be held on Sunday, the 4th October 1931, in Ward No. I of the Dacca Municipality to elect a Commissioner of that ward, *vice* Babu Satish Chandra Sarkar, deceased.

No. 4148 J.—15th August 1931.—Babu Ashutosh Das Gupta, Sub-Deputy Collector, on leave, is posted to the headquarters station of the district of Mymensingh on general duty.

A. Cassells, *Commissioner (offg.)*.

Dacca, the 12th August 1931.

No. 5874M.—It is hereby notified for general information that, under section 13 of the Bengal Village Self-Government Act, V of 1919, Babu Syama Charan Deb has been appointed to be a member of the Masimpur union board in Shibpur police-station in Narayanganj Subdivision of the district of Dacca, *vice* Babu Kamini Kumar Ghose, deceased.

L. G. Durno, *District Magistrate*.

Presidency Division—Calcutta.

No. 20521.S.-G.—11th August 1931.—It is hereby notified for general information that, under rule 20 (*b*) of the dispensary rules, the gentlemen named in the list below have been appointed by the district board of Nadia to be members of the committees for the management of the dispensaries at Alamdanga, Joyrampur and Narainpur in the district of Nadia:—

Alamdanga Dispensary.

Babu Hrishikesh Biswas.
Babu Surendra Kumar Sen.
Babu Uday Sashi Mukherjee.
Babu Aswini Kumar Sen.
Dr. Khondkhar Esrar Ali.
Babu Jatindra Kumar Sen.
Babu Karuna Krishna Sircar.
Munshi Darbesh Ali Biswas.
Munshi Kafiluddin Biswas.

Jayrampur Dispensary.

Babu Sailendra Chandra Maulik.
Babu Ashutosh Mukherjee, M.B.
Babu Surendra Nath Chakravarty.
Babu Rebati Mohan Chowdhury.
Babu Sudhamay Chatterjee.
Babu Amulya Nath Chakravarty.
Babu Amulya Chandra Mukherjee.
Munshi Sheikh Ahmed Ali.
Munshi Sheikh Abdur Rahim.

Narainpur Dispensary.

Subdivisional Officer, Meherpur.
Circle Officer, North Meherpur.
Babu Rakhal Raj Sircar.
Babu Tarak Brahmo Bagchi.
Babu Provash Chandra Roy
Babu Brojendra Kumar Goswami.
Babu Ramani Mohan Bajpai.
Maulvi Warish-uddin Biswas.
Maulvi Reasatulla Khan.
Maulvi Atarali Biswas.

No. 1498M.—12th August 1931.—It is hereby notified for general information that the following gentlemen have been duly elected to be Commissioners of the Rajpur Municipality in the district of the 24-Parganas at the last general election of Commissioners held on the 27th June 1931:—

Ward No. I.

Babu Jogindra Nath Sarkar, B.L.
Babu Phani Bhusan Bhattacharji.
Babu Prokash Chandra Das.
Babu Surendranath Auli.

Ward No. II.

Babu Protap Chandra Ray.
Babu Binoy Krishna Ghosh, B.A.

Ward No. III.

Babu Nalin Behari Ray Chaudhuri.
Babu Satish Chandra Chakrabatty.
Babu Amulya Kumar Nandi.

Ward No. IV.

Babu Rajani Kanto Chatarji.
Babu Sita Prosad Ray Chaudhuri.
Babu Chuni Lal De.

F. W. ROBERTSON, *Commissioner (offg.)*.

24-Parganas, the 15th August 1931.

DECLARATION.

I, J. D. V. Hodge, Collector of the district of 24-Parganas, do hereby, in exercise of the power conferred by clause 10 of section 3 of the Bengal Tenancy Act, 1885 (VIII of 1885), now clause 19, section 3 of the amended Bengal Tenancy Act, and with the sanction of the Board of Revenue, Bengal, declare the following areas to constitute villages within the meaning of the said Act, namely:—

Tauzi No.	Name of estate.	Name of the area.	Name of thana.	Sub-Registration district.	Boundaries.
3193	James Island ..	James Island ..	Mathurapore ..	Mathurapore ..	North, South and West—Saptamukhi river. East—Mauza Durbachati, J. L. No. 164, Lot 112, and paschim Surendranagar, J. L. No. 166, Lot 112.
3192	Burge Island ..	Burge Island ..	Ditto ..	Ditto ..	North, East, South and West—Thakurani river.
3202	G. plot, 6th portion.	G. plot, 6th portion.	Ditto ..	Ditto ..	North and West—Gobardhanpur, J. L. No. 214, G plot, 5th portion. East—Jagaddal Gang. South—Bay of Bengal.
3203	L. plot, southern portion.	L. plot, southern portion.	Ditto ..	Ditto ..	North—Sridharnagar, J. L. No. 201, plot L. East—Thakurani river. South—Bay of Bengal. West—Jagaddal Gang.
3204	Lot No. 120 ..	Lot No. 120 ..	Joynagar ..	Joynagar ..	North—Kamri khal. East—Bainchapi khal and Matla river. South—Olian khal. West—Gura khal.
3205	Lot No. 121 ..	Lot No. 121 ..	Ditto ..	Ditto ..	North—Deulbari Debipur, J. L. No. 158, Lot 122. East and South—Matla river. West—Bainchapi khal and Patkulchand khal.
3206	Lot No. 118 ..	Lot No. 118 ..	Ditto ..	Ditto ..	North—Olian khal. East—Matla river. South—Thakurani river and Matla river. West—Thakurani river and Olian khal.
3191	Bhubaneswari char.	Bhubaneswari char.	Ditto ..	Ditto ..	North—Thakurani river. East—Bhubaneswari, J. L. No. 164, Lot 119, and Benodepur, J. L. No. 166, Lot 177, and Baikunthapur, J. L. No. 167, Lot 117. South and West—Thakurani river.
3207	Lot No. 124 ..	Lot No. 124 ..	Canning ..	Canning ..	North—Lot 125, J. L. No. 176. East—Bidya river. South—Catalle Gang. West—Matla river.
3208	Lot No. 125 ..	Lot No. 125 ..	Ditto ..	Ditto ..	North—Lot 126, J. L. No. 175. East—Bidya river. South—Lot 124, J. L. No. 177. West—Matla river.
3209	Lot No. 126, southern portion.	Lot No. 126, southern portion.	Ditto ..	Ditto ..	North—Laskarpur, J. L. No. 174, Lot 126. East—Bidya river. South—Lot 125, J. L. No. 176. West—Matla river.

J. D. V. HODGE, *Collector, 24-Parganas.*

Krishnagar, the 15th August 1931.

No. 5256J.G.—It is hereby notified for general information that, under section 13 of the Bengal Village Self-Government Act, 1919 (Bengal Act V of 1919), read with rule 35 of the rules for the election and appointment of members of union boards under the said Act, Munshi Hekmat Ulla has been duly elected to be member of the Mirah union board in police-station Kaliganj in the Sadar subdivision of the Nadia district, in place of Muhammad Abdul Jobbar, removed.

T. C. ROY, *District Magistrate, Nadia.*

Rajshahi Division—Jalpaiguri.

No. 2971J.—10th August 1931.—Babu Ashutosh Chaudhury, Sub-Deputy Collector and Khas Mahal Officer, Pabna, is allowed leave on average pay for twenty-two days, with effect from the 27th October 1931, under rule 81 (*b*) (*ii*) of the Fundamental Rules.

No. 2976J.—10th August 1931.—Under the provisions of rule 63 (*1*) of Chapter IV of the Bengal Jail Code, I appoint Maulvi Mohammed Basiruddin, M.L.C., to be a non-official visitor of the Naogaon Sub-Jail for the period of his membership of the Bengal Legislative Council.

No. 2787M.—11th August 1931.—In exercise of the power conferred upon me by section 25 of the Bengal Local Self-Government Act (III of 1885), as amended by Act V (B.C.) of 1908, I approve the election, by the members of the Dinajpur Sadar local board in the district of Dinajpur, of Maulvi Golam Hamidur Rahman, B.L., to be their Chairman.

No. 2790M.—11th August 1931.—In exercise of the power conferred upon me by section 25 of the Bengal Local Self-Government Act (III of 1885), as amended by Act V (B.C.) of 1908, I approve the election, by the members of the Thakurgaon local board in the district of Dinajpur, of Babu Tara Nath Roy Chaudhury to be their Chairman.

No. 2793M.—11th August 1931.—In exercise of the power conferred upon me by section 25 of the Bengal Local Self-Government Act (III of 1885), as amended by Act V (B.C.) of 1908, I approve the election, by the members of the Balurghat local board in the district of Dinajpur, of Babu Mohit Nath Chaudhury to be their Chairman.

No. 2796M.—11th August 1931.—It is hereby notified for general information that, under section 19 (*1*) of the Bengal Local Self-Government Act (III of 1885), as amended by Act V (B.C.) of 1908, Haji Najap Muhammad Chaudhury has been duly elected to be a member of the Sadar local board, Dinajpur, *vice* Maulvi Namiruddin Chaudhury, deceased.

No. 2992J.—11th August 1931.—The orders contained in this office notification No. 2792-J., dated the 29th July 1931, transferring Maulvi Mohammad Mohsin, Sub-Deputy Collector, Dinajpur, to the Thakurgaon subdivision of that district to work in the general line, are hereby cancelled.

No. 2996J.—11th August 1931.—Babu Sachindra Nath Mitra, Sub-Deputy Collector, Rajshahi, is transferred to the Nilphamari subdivision of the Rangpur district to work as Circle Officer, Domar.

This cancels the orders contained in this office notification No. 2806J., dated the 29th July 1931, transferring Babu Monoranjan Das Gupta, Sub-Deputy Collector, Bogra, to the Nilphamari subdivision of the Rangpur district to work as Circle Officer, Domar.

No. 3110J.—11th August 1931.—Babu Amarendra Nath Bhattacharjee, Sub-Deputy Collector, Thakurgaon, Dinajpur, is allowed leave on average pay for fifteen days, with effect from the 12th July 1931 to the 26th July 1931, under rule 81 (*b*) (*ii*) of the Fundamental Rules.

No. 3220J.—12th August 1931.—Babu Jnanendra Nath Chakravarty, Sub-Deputy Collector and Circle Officer, Domar, Rangpur, is allowed leave on average pay for six weeks, with effect from the 27th October 1931, under rule 81 (*b*) (*ii*) of the Fundamental Rules.

J. G. DRUMMOND, *Commissioner (offg.).*

Jalpaiguri, the 12th August 1931.

It is hereby notified for general information that, under section 13 of the Bengal Village Self-Government Act, 1919 (Bengal Act V of 1919), Munshi Sher Mamun Mohammed has been duly elected to be a member of the Goralbari union board, police-station Jalpaiguri, in the Sadar subdivision of district of Jalpaiguri, in place of Munshi Gaza Muhammed, deceased.

[ILLEGIBLE], for *Deputy Commissioner.*

The Calcutta Gazette

THURSDAY, AUGUST 20, 1931.

Part I A

Orders and Notifications by the Government of India republished for general information.

HOME DEPARTMENT.

NOTIFICATIONS.

JUDICIAL.

Simla, the 31st July 1931.

No. F. 673/31.—The Hon'ble Mr. Justice R. E. Jack, I.C.S., a Judge of the High Court of Judicature at Fort William in Bengal, is granted leave from the 7th August or the subsequent date on which he avails himself of it to the 10th September 1931, on full allowance for one month and on half allowance for the remaining period.

The 6th August 1931.

No. F. 699/31.—The Honourable Mr. Justice J. Lort-Williams, K.C., Barrister-at-Law, a Judge of the High Court of Judicature at Fort William in Bengal, is granted leave on full allowance from the 7th August to the 10th September 1931 (both days inclusive).

S. N. ROY,
Joint Secy. to the Govt. of India (offg.).

RAILWAY DEPARTMENT.

(Railway Board.)

NOTIFICATION.

Simla, the 14th July 1931.

No. 7837F.—In pursuance of sub-section (*1*) of section 135 of the Indian Railways Act, 1890 (IX of 1890), the Governor-General in Council is pleased to declare that the administration of the Eastern Bengal Railway shall be liable to pay in aid of the funds of the local authorities set out in the first column of the schedule annexed hereto the tax specified in the second column thereof.

Schedule.

Local authority. 1			Tax.
District. 1(1)	Police-station. 1(2)	Name of union board. 1(3)	2
Rajshahi ..	Godagari ..	Pakri ..	Union rate.
		Matikata ..	Ditto.

J. F. BLACKWOOD,
Secretary, Railway Board.

ARMY DEPARTMENT.

Simla, the 8th August 1931.

Part B.

No. 481. The following appointments are made:

* * * *

AUXILIARY FORCE, INDIA.

The Calcutta and Presidency Bn.

To be 2nd Lt.

Reginald Percy Fuller Smallwood. Dated 9th July 1931.

* * * *

JUDICIAL.

No. 490.—In exercise of the powers conferred by section 30 of the Auxiliary Force Act, 1920 (XLIX of 1920), the Governor-General in Council is pleased to direct that the following further amendment shall be made in the Auxiliary Force Rules, 1920, the same having been previously published as required by sub-section (*4*) of the said section, namely:—

In rule 6 of the said Rules—

(*a*) sub-rule (*2*) shall be omitted; and

(*b*) sub-rules (*3*) and (*4*) shall be renumbered (*2*) and (*3*), respectively.

G. M. YOUNG,

Secy. to the Govt. of India.

The Calcutta Gazette

THURSDAY, AUGUST 20, 1931.

Part IB

Educational Notices.

Orders by the President and the Council of the Calcutta Sanskrit Association.

NOTICE

Calcutta, the 4th August 1931.

The Sanskrit First Examination will be held on Tuesday and Wednesday, the 16th and the 17th February 1932, corresponding to the 3rd and the 4th Falgoon 1338 B.S.

The Sanskrit Second Examination will be held on Friday and Saturday, the 19th and the 20th February 1932, corresponding to the 6th and the 7th Falgoon 1338 B.S.

Candidates desiring to appear at the Sanskrit First and Second Examinations should apply in the prescribed form with a fee of Re. 1 for the First and Rs. 2 for the Second Examination, on or before the 17th December 1931 (1st Pous 1338 B.S.), to the Secretary of the examination centre where they intend to present themselves for the examination. No application will be entertained after the 17th December 1931.

Adhyapakas of *tols* should apply for printed copies of application forms to the Secretary of the examination centre where they intend to send up their pupils for examination, and the Secretary will supply the printed copies of application forms in due course.

Candidates and their *Adhyapakas* are hereby informed that the office of the Calcutta Sanskrit Association neither directly issues any application forms nor entertains the same, so far as the First and Second Examinations are concerned. The Association office does not undertake any responsibility in case of loss or otherwise if the fees and forms for the First and Second Examinations are sent direct to it.

The Sanskrit Title Examination will be held on Monday, the 22nd February 1932, and the three following days (the 9th to the 12th of Falgoon inclusive 1338 B.S.). An optional examination in English Grammar, Translation and Composition will be held on the 5th day, *i.e.*, on the 26th February 1932 (the 13th Falgoon).

Applications for permission to appear at the Title Examination should be made to the undersigned on or before the 5th January 1932 (20th Pous 1338 B.S.), with the usual fee of Rs. 3 only. Applications will be received with a fee of Rs. 3-8 from the 6th January 1932 to the 18th January 1932, after which no further application will be entertained.

Applications should be made to the under signed for printed copies of Title Examination application forms.

S. N. Das Gupta,

Secretary, Calcutta Sanskrit Association.

State Medical Faculty of Bengal.

Grosvenor House, Calcutta, the 11th August 1931.

NOTICES.

The written part of the examinations for the Senior and Junior Certificates in General Nursing and the Senior and Junior Certificates in Maternity Nursing will be held in the Examination Hall, Medical College, Calcutta, on the following days and in the following order :—

Senior and Junior Nursing Certificate Examinations.

Date.	From 11 a.m. to 2 p.m.
1931.	
Monday, 5th October ..	Anatomy, Physiology and Hygiene.
Tuesday, 6th „ ..	General (Medical and Surgical) Nursing

Senior and Junior Midwife Certificate Examinations.

Wednesday, 7th October ..	Midwifery.
Thursday, 8th „ ..	Obstetrical Nursing.

Applications and fees for admission to the above examinations will be received in this office up to 25th August 1931.

The time and place for holding the oral and practical examinations in each subject will be announced later.

The written part of the ensuing Primary, Intermediate and Final Licentiateship Examinations of the Faculty will be held at the top floor of the Durbhanga Library Building, Calcutta University, on the following days and in the following order :—

Date.	From 10 a.m. to 1 p.m.	From 11 a.m. to 2 p.m.	From 2 to 5 p.m.
Primary Licentiateship.			
1931.			
Wednesday, 28th October ..	Chemistry and Physics.	..	
Intermediate Licentiateship.			
Thursday, 29th October	Physiology ..	Materia Medica.	
Friday, 30th „ ..	..	Anatomy.	..
Final Licentiateship.			
Monday, 2nd November	Medicine ..	Medical Jurisprudence and Hygiene.	
Tuesday, 3rd „ ..	..	Surgery	..
Wednesday, 4th „ ..	..	Midwifery	..

Applications and fees for admission to the above examinations will be received in this office up to 7th October 1931.

The time and place for holding the oral and practical examinations in each subject will be announced later.

The written part of the ensuing Preliminary, Intermediate and Final Membership Examinations of the Faculty will be held in the Examination Hall of the Calcutta Medical College on the following days and in the following order :—

Date.	From 10 a.m. to 1 p.m.	From 2 to 5 p.m.
Intermediate Membership.		
1931.		
Tuesday, 1st December ..	Anatomy ..	
Final Membership.		
	Medicine	Hygiene.
Preliminary Scientific Membership.		
Wednesday, 2nd December		Inorganic Chemistry.
Intermediate Membership.		
	Physiology ..	
Final Membership,		
	Surgery	Pathology.
Preliminary Scientific Membership.		
Thursday, 3rd December		Physics.
Intermediate Membership.		
	Materia Medica. ..	
Final Membership.		
	Midwifery	Medical Jurisprudence.
Preliminary Scientific Membership.		
Friday, 4th December ..	Biology ..	
Intermediate Membership.		
	Organic Chemistry. ..	

Applications and fees for admission to the above examinations will be received in this office up to 7th November 1931.

The time and place for holding the oral and practical examinations in each subject will be announced later.

By order of the President,

R. M. Das, *Secretary.*

Rajshahi Division.

Jalpaiguri, the 8th August 1931.

Corrigendum to the list of successful candidates at the Guru-Training and Muallim-Training Final Examination of 1930, Rajshahi Division, published in the *Calcutta Gazette*, dated 19th March 1931:

Bogra District.

Bogra Guru-Training School.

For

39 Yoguddin Akanda

please read

39 Yakubuddin Akanda.

T. Ahmad,

Inspector of Schools, Rajshahi Division.

NOTIFICATION.

The 4th August 1931.

Maulvi G. M. M. Wahiullah, B.A., Assistant Master, Anglo-Persian Department, Calcutta Madrasah, has been elected as a representative of the teaching staff on the managing committee of the Anglo-Persian Department, with effect from 1st August 1931, *vice* Maulvi A. M. Md. Arshad, B.Sc., transferred.

M. HIDAYET HOSAIN,
Principal, Calcutta Madrasah.

University of Dacca.

NOTIFICATION.

Ramna, Dacca, the 10th August 1931.

Orders by the Executive Council, dated the 6th August 1931.

The Degree of Doctor of Science has been conferred on B. S. Srikantan for a thesis entitled "Reactions at the surface of hot metallic filaments."

N. AHMAD, *Registrar.*

Government Commercial Institute.

NOTIFICATION.

Calcutta, the 10th August 1931.

The diploma granted by the Government Commercial Institute Board, Calcutta, to Babu Rachindra Nath Ghosh for passing the Final Examination of the Institute Board in 1930 is hereby cancelled.

M. K. GHOSH,
Secy., Govt. Commercial Institute Board.

Orders by the Vice-Chancellor and Syndicate of the Calcutta University.

NOTICE.

Senate House, the 12th August 1931.

Praphullakumar Basu, son of Babu Surendranath Basu, resident of Kalora (Jessore), and a candidate for the I.Sc. Examination, 1931, from the Hindu Academy, Daulatpur, with Roll Dau. No. 14, is debarred, for gross misconduct, from appearing at any University Examination before 1934.

N. SEN,
Controller of Examinations.

Board of Intermediate and Secondary Education, Dacca.

NOTIFICATIONS.

Ramna, the 3rd August 1931.

Senior Scholarships, 1931.

No. 3893.—The following students are awarded senior scholarships on the results of the Intermediate Examinations, 1931, conducted by the Board of Intermediate and Secondary Education, Dacca. The scholarships take effect from the 1st of June 1931, and are tenable for two years.

(Principals of Colleges and Registrar, University of Dacca, are requested to report to the Secretary, Board of Intermediate and Secondary Education, Dacca, the names of holders of scholarships as soon as they are admitted. No scholarship can be drawn until this information is available):—

Two scholarships of Rs. 25 a month each.

Dacca Intermediate College.

1 Abdus Sobhan Khan Chaudhury.

Jagannath Intermediate College.

2 Bimalendu Sengupta.

Three scholarships of Rs. 20 a month each.

Eden Intermediate College

1 Manojyotsna Bhattacharyya.

Jagannath Intermediate College.

2 Chittatosh Datta.
3 Probodhranjan Dasgupta.

Special scholarships for girls. Two of Rs. 20 a month each.

Eden Intermediate College.

1 Sadhana Sengupta.
2 Suprava Das.

No. 3894.—Subject to the usual conditions of good conduct and satisfactory progress, the Fuller Memorial Continuation Scholarship (Second Set) of the value of Rs. 15 a month is awarded to Abdur Razzaq who passed the Intermediate Examination of the Board from the Dacca Intermediate College in 1931.

2. The scholarship takes effect from the 1st July 1931, and is tenable for two years at the University of Dacca.

3. The scholarship-holder must reside in the Muslim Hall of the University.

Special Senior Scholarship for Backward Classes, 1931.

No. 3895.—The following student is awarded the above scholarship for backward classes on the results of the Intermediate Examinations, 1931, conducted by the Board of Intermediate and Secondary Education, Dacca. The scholarship takes effect from the 1st July 1931, and is tenable for two years at the University of Dacca:—

One special scholarship of Rs. 15 a month.

Jagannath Intermediate College.

Umeschandra Pandit.

A. RAHMAN, *Secretary.*

CALCUTTA UNIVERSITY.

ERRATA LIST.

Senate House, the 14th August 1931.

1. In the list of successful candidates at the Matriculation Examination, 1931, published in the *Calcutta Gazette*, dated 25th June 1931—

(a) on page 560, for

"Roll Bhow. 243 Durgacharan Haldar 17-11 Second."

please read

"Roll Bhow. 243 Durgacharan Haldar 17-11 First,"

(b) on page 561, for

"Roll Bhow. 462 Ramendrakrishna Majumdar (Mc.) ... 16-6 First"

please read

"Roll Bhow. 462 Ranendrakrishna Majumdar (Mc.) ... 16-6 First,"

(c) on page 564, for

"Roll Cal. 290 Lalitmohan Basu ... 16-8 Second"

please read

Kola Union High School.

"Roll Cal. 290 Lalitmohan Basu ... 16-8 Second,"

(d) on page 575, for

"Roll Cal. 2243 Burjos Rustomjee Master 19-7 Second"

please read

"Roll Cal. 2243 Burjor Rustomjee Master 19-7 Second,"

(e) on page 579, for

"Roll Cal. 3133 *Lalmohan Bandyopadhyay (MLVMl) ... 16-5 First"

please read

"Roll Cal. 3133 *Lalmohan Bandyopadhyay (MLVmH) ... 16-5 First,"

(f) on page 580, for

"Roll Cal. 3261 Sudhirranjan Bandyopadhyay ... 16-6 First"

please read

"Roll Cal. 3261 Sudhiranjan Bandyopadhyay ... 16-6 First,"

(g) on page 583, for

"Roll Cal. P.37 Abdul Sayum Khan Suri 19-4 Second"

please read

"Roll Cal. P.37 Abdul Qayum Khan Suri 19-4 Second,"

(h) on page 585, for

"Roll Gau. 116 Dabhendranath Sarma 17-10 Second"

please read

"Roll Gau. 116 Debendranath Sarma 17-10 Second,"

(i) on page 593, for

"Roll Baul. 131 Jitendranath Khan ... 18-5 Third,"

please read

"Roll Baul. 131 Jibendranath Khan ... 18-5 Third"

(j) on page 605, for

"Roll Chi. P.5 Semak Singh (Ll) ... 18-3 First"

please read

"Roll Chi. P.5 Sewak Singh (Ll) ... 18-3 First,"

(k) on page 615, for

"Roll How. 204 Lalitmohan Basu (M) ... 17-7 First" and
"Roll How. 278 Sk. Kaisar Ali Uazir ... 17 First"

please read, respectively,

"Roll How. 204 Lalitkumar Basu (M) ... 17-7 First" and
"Roll How. 278 Sk. Kaisar Ali Nazir ... 17 First,"

(l) on page 620, for

"Roll Jes. 106 Md. Joinul Abedin ... 21 Third"

please read

"Roll Jes. 106 Md. Joinal Abedin ... 21 Third,"

(m) on page 634, for

"Roll Mid. 187 Barendranath Patra ... 19-5 First"

please read

"Roll Mid. 187 Barendranath Paira ... 19-5 First,"

(n) on page 635, for

"Roll Mid. 265 V. Marasinha Rao ... 17-9 Second" and
"Roll Muns. 47 Md. Mazibar Rahman Khan ... 18-4 Third"

please read, respectively,

"Roll Mid. 265 V. Narsimha Rao ... 17-9 Second" and
"Roll Muns. 47 Md. Nazibar Rahman Khan ... 18-4 Third,"

(o) on page 653, for

"Roll Tang. 209 Chandrakanta Chakrabarti ... 16-3 First"

please read

"Roll Tang. 209 Chandrakanta Chakrabarti (s) ... 16-3 First,"

(p) on page 569, for

"Roll Cal. 1111 Chhob Prasad Sinha (LV) ... 18-3 First"

please read

"Roll Cal. 1111 Chhote Prasad Sinha (LV) ... 18-3 First,"

(q) on page 612, for

"Roll Far. P.1 Abdul Wahid Khan ... 20 First"

please read

"Roll Far. P.1 Abdul Wahid Khan ... 28-2 First,"

(r) on page 627, for

"Roll Kri. 229 Sukhendunath Bandyopadhyay ... 15-9 Second"

please read

"Roll Kri. 229 Sukhendranath Bandyopadhyay ... 15-9 Second."

2. In the list of successful candidates at the I.Sc. Examination, 1931, published in the *Calcutta Gazette*, dated 2nd July 1931—

(a) on page 742, for

"310 Guha, Mahendranath ... Presidency College"

please read

"310 Guha, Mahendranarayan .. Presidency College,"

(b) on page 743, for

"323 Khondakar Bazbali ... Barisal Brajamohan College" and
"349 Mitra, Bijaykumar ... Scottish Church College"

please read, respectively,

"323 Khondakar Bazle Ali ... Barisal Brajamohan College" and
"349 Mitra, Bijaukumar ... Scottish Church College,"

(c) on page 744, for

"469 Bhattacharyya, Kanailal ... City College"

please read

"469 Bhattacharyya, Kanailal ... Bangabasi College,"

(d) on page 746, for

"581 Saha, Satyakinkar ... City College"

please read

"581 Sinha, Satyakinkar ... City College,"

(e) on page 756, for

"740 Saha, Barindranath ... Bangabasi College"

please read

"740 Sau, Barindranath ... Bangabasi College,"

(f) on page 757, for

"840 Syed Wakib Ahmad Jafferey ... Ripon College"

please read

"840 Syed Wakil Ahmad Jafferey ... Ripon College."

3. In the list of successful candidates at the I.A. Examination, 1931, published in the *Calcutta Gazette*, dated the 9th July 1931—

(a) on page 775, for

"65 Chakrabarti, Mohinimohan ... Scottish Church College"

please read

"65 Chakrabarti, Mohinimohan (S) ... Scottish Church College,"

(b) on page 780, for

"374 Mitra, Niharkana ... Non-collegiate student (Burdwan Raj College)"
"385 Maher, R. I. ... Non-collegiate student (St. Xavier's College)" and
"439 Pal, Satindramohan ... Vidyasagar College"

please read, respectively,

"374 Mitra, Niharkana ... Non-collegiate student (Roll Ber. F.N. 1)"
"385 Maher, R. J. ... Non-collegiate student (St. Xavier's College)" and
"439 Ray, Satindramohan ... Vidyasagar College,"

(c) on page 784, for

'241 Chaudhuri, Atulkrishna ... Non-collegiate student (Burdwan Raj College)"

please read

'241 Chaudhuri, Atulkrishna ... Non-collegiate student (Roll Bur. N. 14),"

(d) on page 785, for

"355 Debi, Rama ... Non-collegiate student (Roll Cal. F.N. 18)"

please read

"355 Debi, Uma ... Non-collegiate student (Roll Cal. F.N. 18),"

(e) on page 793, for

"920 Syed Bunhan Uddin Ahmed ... Burdwan Raj College" and
"921 Syed Faleh An Meerza (VP) ... Non-collegiate student (Islamia College)"

please read, respectively,

"920 Syed Burhan Uddin Ahmed ... Burdwan Raj College" and
"921 Syed Fateh Ali Meerza (VP) ... Non-collegiate student (Islamia College)."

4. In the list of successful candidates at the Final Examination in Law held in February 1931, published in the *Calcutta Gazette*, dated the 14th May 1931, on page 352—

(a) for

"77 Chaudhuri, Asutosh"

please read

"77 Chaudhuri, Asutoshnarayan,"

(b) for

"90 Syed Abdul Mojil"

please read

"90 Syed Abdul Mojib."

5. In the list of successful candidates at the Preliminary Examination in Law held in February 1931, published in the *Calcutta Gazette*, dated the 14th May 1931—

(a) on page 356, for

"10 Bhattacharyya, Chittaranjan"

please read

"Ripon Law College
10 Bhattacharyya, Chittaranjan,"

University Law College,"

(b) on page 357, for

"94 Chattopadhyay, Tulsicharan" and
"138 Gangopadhyay, Prabodhkumar"

please read, respectively,

"94 Chattopadhyay, Tulsichandra" and
"138 Gangopadhyay, Pradoshkumar."

6. In the list of successful candidates at the B.Sc. Examination, 1931, published in the *Calcutta Gazette*, dated the 6th August 1931—

(a) on page 833, for

"282 Saha, Sailendrakumar ... Non-collegiate student (Bhowanipur Asutosh College)"

please read

"282 Sinha, Sailendrakumar ... Non-collegiate student (Bhowanipur Asutosh College),"

(b) on page 831, for

"106 Das, Dhirendranath ... Non-collegiate student (Vidyasagar College)"

please read

"106 Das, Dinendranath ... Non-collegiate student (Vidyasagar College),"

(c) on page 834, for

"305 Sen, Sudhirchandra ... Ripon College"

please read

"305 Sen, Suhridchandra ... Ripon College."

7. In the list of successful candidates at the B. Com. Examination, 1931, published in the *Calcutta Gazette*, dated the 6th August 1931—

(a) on page 836, for

"Sarkar, Santoshkumar ... Non-collegiate student, Post-Graduate Teaching in Arts" and
"Ray, Manindranath ... Non-collegiate student, Post-Graduate Teaching in Arts"

please read, respectively,

"Sarkar, Santoshkumar ... Non-collegiate student (Vidyasagar College)" and
"Ray, Manindranath ... Non-collegiate student (Vidyasagar College),"

(b) on page 835, for

"Goswami, Umapati ... Non-collegiate student, Post-Graduate Teaching in Arts"

please read

"Goswami, Umapati ... Non-collegiate student (Vidyasagar College)."

N. SEN,
Controller of Examinations.

The Calcutta Gazette

THURSDAY, AUGUST 20, 1931.

Part II

Advertisements.

Notices.

Advertisements, Notices, etc., intended for insertion in this Part of the Gazette cannot be received after noon of Saturday.

IMPERIAL BANK OF INDIA.

Statement of the affairs of the Imperial Bank of India on the 7th August 1931.

LIABILITIES.

	Rs.	A.	P.
Subscribed Capital ..	11,25,00,000	0	0
Capital paid up ..	5,62,50,000	0	0
Reserve ..	5,42,50,000	0	0
Public Deposits ..	17,29,69,000	0	0
Other Deposits ..	64,96,66,000	0	0
Loans against securities per contra ..	....		
Loans from the Government of India under section 20 of the Paper Currency Act, against Inland bills discounted and purchased per contra ..	....		
Contingent liabilities ..	....		
Sundries ..	1,12,63,000	0	0
	94,43,98,000	0	0

ASSETS.

	Rs.	A.	P.
Government Securities ..	28,89,54,000	0	0
Other authorized securities under the Act ..	2,76,78,000	0	0
Ways and Means Advances to the Government of India ..	....		
Loans ..	8,82,71,000	0	0
Cash Credits ..	27,80,55,000	0	0
Inland bills discounted and purchased ..	2,71,36,000	0	0
Foreign bills discounted and purchased ..	37,82,000	0	0
Bullion ..	....		
Dead stock ..	2,72,47,000	0	0
Liability of constituents for contingent liabilities per contra ..	....		
Sundries ..	50,50,000	0	0
Balances with other Banks ..	17,85,000	0	0
	74,79,58,000	0	0
Cash ..	19,64,40,000	0	0
	94,43,98,000	0	0

The above balance sheet includes :—

	£
Deposits in London ..	937,300
Advances and Investments in London ..	904,700
Cash and balances at other Banks in London ..	135,800

Percentage 23·55.

Bank rate 7 per cent.

OSBORNE A. SMITH,
K. M. MACDONALD,
Managing Governors.

(1717—1)

LAND SALE NOTICES.

Notification A.

NOTICE is hereby given, under sections 6 and 13, Act XI of 1859, that the undermentioned estates and shares of estates in the district of Bakarganj will be put up for sale at the office of the Collector of that district on the 24th September 1931, at 12 noon, for arrears of revenue and other demands due on or before 30th Jaista 1338 B.S. which by law are realizable as arrears of land revenue.

When in columns 5, 7 and 9 of the following statement it is stated that only a share is to be sold, it is to be understood that a separate account is kept for that share :—

Tauzi number.	Name of mahal and pargana.	Sadar Jama of whole estate.	Whether the whole estate is to be sold.	If only a share is to be sold, specification of such share or shares.	Names of proprietors of property to be sold.	If only a share is to be sold, the sadar jama of such share.	If the whole estate is to be sold, the arrears due from it	If only a share is to be sold, the arrears due from it.
1	2	3	4	5	6	7	8	9
		Rs. A. P.				Rs. A. P.	Rs. A. P.	Rs. A. P.
802	Mahal Mir Pamsuddin, pargana Bangorora.	894 14 11	..	9a. 3g. 1c. 1kt. share covered by separate account No. 1 will be sold. All other shares than that specified will be excluded from sale.	Ishan Chandra Das, Manager, Court of Wards, Mr. R. G. G. Brown's estates, and another.	512 11 8	..	7 15 6
1555	Taluk Mahammad Jamir, pargana Bazorgomedpur.	559 11 11	Whole	....	Biswesswar Chakrabarty and others.	..	8 8 7	..
1729	Taluk Chandra Sekhar Chakrabarty, pargana Chandradvip.	2,531 6 6	Do.	....	Nibaran Chandra Banerji, common manager to the estate of Gopal Chandra Chakrabarty and others.	..	236 8 6	..
3851	Zemindari share 10½ sds., pargana Salimabad.	3,280 11 4	Do.	....	Tarak Nath Ray Chaudhury and others.	..	111 14 5	..
4509	Char Sharikal, pargana Bangorora.	1,586 12 6	..	9a. 3g. 1c. 1kt. share covered by separate account No. 1 will be sold. All other shares than that specified will be excluded from sale.	Nishi Kanta Ganguly and another.	909 1 4	..	4 11 6
4554	Kismat Kewabunia, pargana Aurangpur.	1,320 1 3	Whole ..	....	Sourindra Nath Mitra and another.	..	167 2 6	..
4605	Char Samasdi Baligao, pargana Salstanagar.	2,197 0 0	Do.	....	Satish Chandra Das and others.	..	131 5 3	..
4622	Char Kushangal, tappah Aslmpur.	647 6 6	Do.	....	Promada Debi ..	..	47 0 0	..
4706	Char Algi, pargana Ratnadi-Kalikapur.	4,446 0 0	Do.	....	Hakimoddi Kazi and another.	..	4,306 15 3	..
4818	Char Raghunathdi, pargana Chandradvip.	2,148 0 0	Do.	....	Pyari Mohan Sen and another.	..	600 0 0	..
4819	Char Tona, pargana Chandradvip.	1,496 0 0	Do.	....	Shushila Sundari Chakrabarty, manager for her minor son Kshirode Chandra Chakrabarty.	..	900 0 0	..
5229	Char Ratanpura, pargana Uttar Shahabazpur.	3,894 0 0	Do.	....	Dharani Nath Basak and others.	..	2,107 2 10	..
5285	Char Joynagar, pargana Uttar Shahabazpur.	29,427 0 0	Do.	....	Saradindra Mukherji.	..	9,927 0 0	..
6457	Srikanta Ray Chaudhury, zemindari share 1 a. 6g. 2c. 2 kt., pargana Aurangpur.	1,195 10 0	Do.	....	Manorama Debi and others.	..	74 1 0	..
6459	Kali Prosad Ray Chaudhury, zemindari share 13g. 1 c. 1 kt., pargana Aurangpur.	580 7 6	Do.	....	Brojakanta Ray Chaudhury.	..	72 3 0	..

Bakarganj, the 6th August 1931.

S. C. BASU, Addl. Collector.

Notification A.

NOTICE is hereby given, under sections 6 and 13, Act XI of 1859, that the undermentioned estate and shares of estate in the district of Bogra will be put up for sale at the office of the Collector of that district on the 26th September 1931, at 12 noon, for arrears of revenue and other demands which by law are realizable as arrears of land revenue :—

Tauzi No.	Name of mahal and pargana.	Sadar jama of whole estate.	Whether the whole estate is to be sold.	If only a share is to be sold, specification of such share or shares.	Names of proprietors of property to be sold.	If only a share is to be sold, the sadar jama of such share.	If the whole estate is to be sold, the arrears due from it.	If only a share is to be sold, the arrears due from it.
1	2	3	4	5	6	7	8	9
		Rs. A. P.					Rs. A. P.	
6	Murail, pargana Shelbarsha.	7,527 13 7	The whole estate will be sold.	....	Syed Abdur Roh Chondhury and others.	..	746 10 8	..

Bogra, the 4th August 1931. A. B. DE, Collector.

Notification A.

NOTICE is hereby given, under sections 6 and 13, Act XI of 1859, that the undermentioned estate and shares of estate in the district of Bogra will be put up for sale at the office of the Collector of that district on the 26th September 1931, at 12 noon, for arrears of revenue and other demands which by law are realizable as arrears of land revenue.

When in columns 5, 7 and 9 of the following statement it is stated that only a share is to be sold, it is to be understood that a separate account is kept for that share :—

Tauzi No.	Name of mahal and pargana.	Sadar jama of whole estate.	Whether the whole estate is to be sold.	If only a share is to be sold, specification of such share or shares.	Names of proprietors of property to be sold.	If only a share is to be sold, the sadar jama of such share.	If the whole estate is to be sold, the arrears due from it.	If only a share is to be sold, the arrears due from it.
1	2	3	4	5	6	7	8	9
		Rs. A. P.				Rs. A. P.		Rs. A. P.
175 Separate account No. 1.	Kharija Pakuria, pargana Apoil.	5,756 3 0	No ..	Separate account No. 1 of estate No. 175, i.e., 8 annas share of mauza Manik and others, police-station Panchbibi, Bhomai, Kusalia and others, police-station Jaipurhat, Tola, Badal and others, police-station Khetlal, will be sold. All other shares than that specified will be excluded from the sale.	Surabala Choudhurani.	2,879 1 0	..	151 3 1

Bogra, the 4th August 1931. A. B. DE, Collector.

Notification A.

NOTICE is hereby given, under sections 6 and 13, Act XI of 1859, that the undermentioned estate and shares of estate in the district of Bogra will be put up for sale at the office of the Collector of that district on the 26th September 1931, at 12 noon, for arrears of revenue and other demands which by law are realizable as arrears of land revenue :—

Tauzi No.	Name of mahal and pargana.	Sadar jama of whole estate.	Whether the whole estate is to be sold.	If only a share is to be sold, specification of such share or shares.	Names of proprietors of property to be sold.	If only a share is to be sold, the sadar jama of such share.	If the whole estate is to be sold, the arrears due from it.	If only a share is to be sold, the arrears due from it.
1	2	3	4	5	6	7	8	9
		Rs. A. P.					Rs. A. P.	
724	Taraf Domrai and others, pargana Chapila.	16,202 3 0	The whole estate will be sold.	....	Kumar Protiva Nath Roy and others.	..	1,770 15 4	..

Bogra, the 4th August 1931. A. B. DE, Collector.

Notification A.

NOTICE is hereby given, under sections 6 and 13, Act XI of 1859, that the undermentioned estates and shares of estates in the district of Bakarganj will be put up for sale at the office of the Collector of that district on the 24th September 1931, at 12 noon, for arrears of revenue and other demands, due on or before 30th Jaistha 1338 B. S., which by law are realizable as arrears of land revenue :—

Tauzi number.	Name of mahal and pargana.	Sadar jama of whole estate.	Whether the whole estate is to be sold.	If only a share is to be sold, specification of such share or shares.	Names of proprietors of property to be sold.	If only a share is to be sold, the sadar jama of such share.	If the whole estate is to be sold, the arrears due from it.	If only a share is to be sold, the arrears due from it.
1	2	3	4	5	6	7	8	9
		Rs.					Rs. A.	
6486	Surplus alluvial accretion to Char Lakhmi *alias* Padma Manasha, tappa Krishnadebpur.	4,487	Whole ..	....	Ashapurna Banarjee and others.	....	5,719 2	....

Barisal, the 10th August 1931. S. C. BASU, Addl. Collector.

Notification A.

NOTICE is hereby given, under sections 6 and 13, Act XI of 1859, that the undermentioned estates and shares of estates in the district of Howrah will be put up for sale at the office of the Collector of that district on 26th September 1931, at 12 noon, for arrears of revenue and other demands which by law are realizable as arrears of land revenue.

When in columns 5, 7 and 9 of the following statement it is stated that only a share is to be sold, it is to be understood that a separate account is kept for that share :—

Tauzi No.	Name of mahal and pargana.	Sadar jama of whole estate.	Whether the whole estate is to be sold.	If only a share is to be sold, specification of such share or shares.	Names of proprietors of property to be sold.	If only a share is to be sold, the sadar jama of such share.	If the whole estate is to be sold, the arrears due from it.	If only a share is to be sold, the arrears due from it.
1	2	3	4	5	6	7	8	9
		Rs. A. P.				Rs. A. P.	Rs. A. P.	Rs. A. P.
4	Mondalghat, pargana Mondalghat.	2,23,108 13 11	..	12 gandas ..	Shamananda Banerjee as Manager of the Wards Estate of Dwijendra Nath Ray Choudhury and others. Released on 15th March 1929.	4,820 4 3	..	3,167 3 5
4/8	Ditto ..	2,23,108 13 11	..	12 gandas 3 kara 16 til	Sm. Nikunja Munjari Dasi.	8,029 10 4	..	450 0 0
4/12	Ditto ..	2,23,108 13 11	..	10 gandas ..	Sailaja Nath Ray Choudhury and others.	6,972 13 2	..	904 11 10

All other shares besides those specified above will be excluded from the sale.

Howrah, the 7th August 1931. A. M. CLARK, Collector.

Notification A.

NOTICE is hereby given, under sections 6 and 13, Act XI of 1859, that the undermentioned estates and shares of estates in the district of Mymensingh will be put up for sale at the office of the Collector of that district on 25th September 1931, at 12 noon, for arrears of revenue and other demands which by law are realizable as arrears of land revenue :—

Tauzi No.	Name of mahal and pargana.	Sadar jama of whole estate.	Whether the whole estate is to be sold.	If only a share is to be sold, specification of such share or shares.	Names of proprietors of property to be sold.	If only a share is to be sold, the sadar jama of such share.	If the whole estate is to be sold, the arrears due from it.	If only a share is to be sold, the arrears due from it.
1	2	3	4	5	6	7	8	9
		Rs. A. P.					Rs. A. P.	
96	Zemindary, pargana Nasirujial.	7,197 1 6	Yes ..	....	Girish Chandra Pal Chowdhury, Promode Ch. Roy Chowdhuri and others.	....	3,108 5 1	....
5253-Jt.	Zemindary, pargana Mymensingh.	10,137 3 0	No ..	Joint share ..	Jnanendra Nath Sanyal, trustee to the estate of Bamini Kanta Lahiry and others.	....	....	751 3 9

Mymensingh, the 7th August 1931. [ILLEGIBLE], *for* Collector.

Notification A.

NOTICE is hereby given, under sections 6 and 13, Act XI of 1859, that the undermentioned estates and shares of estates in the district of Malda will be put up for sale at the office of the Collector of that district on the 26th September 1931, at 12 noon, for arrears of revenue and other demands which by law are realizable as arrears of land revenue. The estates are being advertised for sale for instalments of revenue which were due on or before 32nd Jaistha 1338 B. S. of which the last date of payment was in the next Asarh 1338 B. S.

When in columns 5, 7 and 9 of the following statement it is stated that only a share is to be sold, it is to be understood that a separate account is kept for that share :—

Tauzi No.	Name of mahal and pargana.	Sadar jama of whole estate.	Whether the whole estate is to be sold.	If only a share is to be sold, specification of such share or shares.	Names of proprietors of property to be sold.	If only a share is to be sold, the sadar jama of such share.	If the whole estate is to be sold, the arrears due from it.	If only a share is to be sold the arrears due from it.
1	2	3	4	5	6	7	8	9
		Rs. A. P.				Rs. A. P.		Rs. A. P.
118	Pargana Gopalpur Jadunagar Nimgachi.	1,653 14 9	No ..	118—R. S., 15 annas share.	Janeswar Das and others.	741 6 9	..	67 12 5
154G	Pargana Kashimnagar, 10 annas taraf Mahedipur	1,715 0 0	No ..	154 G—1, 6 annas share.	Md. Ismail Choudhuri.	1,286 10 9	..	199 7 7
220	Pargana Habelitara, kismat 11 annas, taraf Sahabajpur.	1,547 14 0	No ..	220—1, 12 annas share.	Ditto ..	1,160 14 6	..	176 2 6

Malda, the 8th August 1931. N. V. H. SYMONS, Collector.

Notification A.

NOTICE is hereby given, under sections 6 and 13 of the Act XI of 1859, that the undermentioned estates in the district of Jessore will be put up to sale at the office of the Collector of that district on the 26th September 1931, at 12 noon, for arrears of revenue and other demands which by law are realisable as arrears of land revenue.

When in columns 5, 7 and 9 of the following statement it is stated that only a share is to be sold, it is to be understood that a separate account is kept for that share :—

Tauzi No.	Name of mahal and pargana.	Sadar jama of whole estate.	Whether the whole estate is to be sold.	If only a share is to be sold, specification of such share or shares.	Names of proprietors of property to be sold.	If only a share is to be sold, the sadar jama of such share.	If the whole estate is to be sold, the arrears due from it.	If only a share is to be sold, the arrears due from it.
1	2	3	4	5	6	7	8	9
		Rs. A. P.				Rs. A. P.	Rs. A. P.	Rs. A. P.
225	Palua, pargana Syedpur.	..	No ..	1 hisya, 7 as. 10 gds. interest. (Share Nos. 0 and 2 with 8 as. 10 gds. interest will not be sold.)	Syed Md. Maswood and others.	800 0 0	..	42 14 0
261	Sagenna, pargana Mamudsahi.	1,596 8 9	Yes ..	....	Bankim Chandra Pandey and others.	..	146 5 9	..
274	Zamindari Sripad Guha, pargana Sripadguha.	..	No ..	0 hisya, 12 as. 16 gds. interest. (Share No. 1 with 3 as. 4 gds interest will not be sold.)	Sailaja Nath Ray Chaudhury and others.	2,253 1 4	..	41 2 11
4377	Dayemi taluk Sidheswar, pargana Naldi.	1,000 0 0	Yes ..	....	Hadji Chaudhury Md. Ismail Khan.	..	103 0 6	..
4819	Dihi Banshbaria, pargana Muighar.	..	No ..	2 hisya, 5 as. interest (Share Nos. 3, 5 and 6 with 7 as. 8 gds. interest will not be sold.)	Sailaja Nath Ray Chaudhury and others.	1,006 6 9	..	13 13 3½
5041	Kararadihi, pargana Rajpur.	034 7 6	Yes ..	....	Usha Debi and others.	..	404 1 6½	..
5088	Zamindari Jaipur, pargana Jaipur.	..	No ..	3 hisya, 5 as. interest (share Nos. 0 and 6 with 11 as. interest will not be sold.)	Jotindra Nath Ray Chaudhury and others.	2,314 8 8	..	289 5 1

Jessore, the 12th August 1931. K. G. MORSHED, Collector.

Notification A.

NOTICE is hereby given, under sections 6 and 13, Act XI of 1859, that the undermentioned estates and shares of estates in the district of Nadia will be put up for sale at the office of the Collector of that district on the 25th September 1931, at 12 noon, for arrears of revenue and other demands which by law are realizable as arrears of land revenue.

When in columns 5, 7 and 9 of the following statement it is stated that only a share is to be sold, it is to be understood that a separate account is kept for that share :—

Tauzi No.	Name of mahal and pargana.	Sadar jama of whole estate.	Whether the whole estate is to be sold.	If only a share is to be sold, specification of such share or shares.	Names of proprietors of property to be sold.	If only a share is to be sold, the sadar jama of such share.	If the whole estate is to be sold, the arrears due from it.	If only a share is to be sold, the arrears due from it.
1	2	3	4	5	6	7	8	9
		Rs. A. P.				Rs. A. P.	Rs. A. P.	Rs. A. P.
29	Bagwan, pargana Shalmazial.	2,402 14 11	Whole ..	....	Gopesh Chandra Majumdar and others.	..	213 12 8	..
871/5	Nakasipara, pargana Bagwan.	..	No ..	8 annas 11 gandas 2 kr. 84 ds. All other shares than that specified will be excluded from sale.	Sibendra Nath Sinha Roy and others.	3,233 10 0	..	261 10 3
442/2	Bamanpara, pargana Ukhra.	..	No ..	5 annas .. All other shares than that specified will be excluded from sale.	Shyama Nanda Banerjee, Manager, Satkhira Court of Wards, and others.	1,672 2 9	..	173 11 8
2861	Britthuda, pargana Bagwan.	564 14 10	Whole ..	....	Chandi Prasad Ganguly and others.	..	106 0 0	..
2949	Bil Basu Lakshmi, pargana Bagwan.	558 8 4	Do. ..	....	Saroj Ranjan Pal Chowdhuri and others.	..	49 2 7	..
3237/0	Teghari, pargana Muhammadshahi.	..	No ..	10 annas 5 gandas .. All other shares than that specified will be excluded from sale.	Harish Chandra Sinha and others.	635 10 4	..	19 4 1
3431/0	Nazir Kasitpur, pargana Nazir Kasitpur.	..	No ..	8 annas .. All other shares than that specified will be excluded from sale.	Shyama Nanda Banerjee, Manager, Satkhira Court of Wards, and others.	809 14 9	..	144 4 5
834	Miadi Mahal Char Durlavpur, pargana Goash.	597 0 0	Whole ..	....	Girindra Nath Roy and others.	..	149 0 0	..
854	Char Jhutladanga, pargana Shalmazial.	1,370 0 0	Do. ..	....	Gopal Chandra Majumdar and others.	..	342 0 0	..
870	Char Udaichandrapur, pargana Bagwan.	5,147 0 0	Do. ..	....	Sibendra Nath Sinha Roy and others.	..	724 10 9	..
871	Char Naodapara, pargana Shalmazial.	1,124 0 0	Do. ..	....	Sib Sundari Dasya	..	356 0 0	..
892	Char Srirampur, pargana Bhandardaha.	590 0 0	Do. ..	....	Bibhuti Bhusan Pal Chowdhuri and others.	..	147 0 0	..
3531	Char Goalgram, pargana Rajpur.	719 0 0	Do. ..	....	Nalini Mohan Roy.	..	180 0 0	..
3819	Char Pirpur, pargana Islampur.	662 0 0	Do. ..	....	Gopi Sundari Dasya and others.	..	248 10 0	..

Krishnagar, the 13th August 1931.

[ILLEGIBLE], *for* Collector.

Notification A.

NOTICE is hereby given, under sections 6 and 13 of Act XI of 1859, that the undermentioned estates in the district of 24-Parganas will be put up for sale at the office of the Collector of that district on the 10th September 1931, at 12 noon, for arrears of revenue and other demands which by law are realizable as arrears of land revenue :—

Land No.	Name of mahal and pargana.	Sadar jama of whole estate.	Whether the whole estate is to be sold.	If only a share is to be sold, specification of such share or shares.	Names of proprietors of property to be sold.	If only a share is to be sold, the sadar jama of such share.	If the whole estate is to be sold, the arrears due from it.	If only a share is to be sold, the arrears due from it.
1	2	3	4	5	6	7	8	9
		Rs. A. P.					Rs. A. P.	
314	Mahal Harinarayanpore, pargana Muragacha.	12,168 14 0	Whole ..	....	Kumud Krista Mandal and others.	....	1,448 2 9½	....
315	Mahal Raghunathpore, pargana Muragacha.	10,150 1 9	Do. ..	....	Ditto ..	....	5,709 9 5½	....
378	Mahal Kalikapore, pargana Baridhati.	2,133 6 11	Do. ..	....	Khiroda Kumari Dasi and others.	....	309 7 11	....
385	Mahal Huda Rashkhali, pargana Azimabad.	10,395 7 0	Do. ..	....	Suresh Chandra Chatterji and others.	....	12,616 5 11	....
388	Mahal Mayapore, pargana Balia.	8,326 9 0	Do. ..	....	Rama Prosad Pande and others.	....	3,120 11 0	....
401	Mahal Ramkrishtapore, pargana Azimabad.	8,031 0 0	Do. ..	....	Jotindranath Mondal and others.	....	3,382 13 0	....
403	Mahal Patharberia, pargana Azimabad.	5,143 2 3	Do. ..	....	Ashutosh Santra and others.	....	1,710 3 1	....
643	Mahal Paikan, pargana Amirabad.	560 8 0	Do. ..	....	Jotindranath Ray Chaudhury and others.	....	204 3 6	....
2855	Mahal plot D, 1st portion, pargana Sundarbans.	1,069 0 0	Do. ..	....	Ichamayi Dasi and others.	....	68 6 4	....
2887	Mahal plot D, 3rd portion, pargana Sundarbans.	1,105 0 0	Do. ..	....	Madhab Chandra Dey and others.	....	30 4 8	....
2916	Mahal F plot, 2nd portion, pargana Sundarbans.	1,172 0 0	Do. ..	....	Kedarnath Chakraverty and others.	....	86 5 3	....
2990	Mahal lot No. 119, 1st portion, pargana Sundarbans.	839 0 0	Do. ..	....	Provat Kumar Pal and others.	....	877 8 5	....

Alipore, the 15th August 1931. P. GHOSE, *for* Collector.

Advertisement of sale.

(*See* Rule 161.)

NOTICE is hereby given that the proprietary right of Government, as specified in the conditions of sale below, to the undermentioned estate situate in the district of Burdwan will be put up to sale at the Burdwan Collectorate on 25th September 1931, corresponding with 1338 B.S.

The purchasers will be subject to the following conditions of sale :—

Conditions of sale.

1st—The estate to be sold to the highest bidder above the upset price, which will be fixed by the Collector at the time of sale. The purchaser of this estate will be considered as the proprietor of the estate, and the entire proprietary right of Government in such estate will be transferred to him revenue free.

2nd—The sale to be subject to existing leases and to the rights conferred by the settlement proceedings, and by the laws in force and purchasers to be bound to respect the rights of resident cultivators who have signed the schedule of assessment prepared by the revenue authorities.

3rd—If the amount of purchase money do not exceed Rs. 100, the whole amount to be paid down at once.

4th—If the amount of purchase money exceed Rs. 100, one-fourth of the amount bid to be immediately deposited. If the balance be not paid by the noon of the 15th day after the sale, reckoning the day of sale as one, or if that day be a close holiday, then by noon of the first succeeding office day, the sale is to be cancelled (the sum deposited being forfeited to Government), and the estate to be again put up to sale at the risk of the defaulting purchaser, after issue of advertisement, as in the case of original sale :—

Number on the district roll.	Name of estate and pargana.	Approximate area in acres.	Government revenue assessed.
			Rs. A. P.
3613	Mandra	·34	1 5 0

Burdwan, the 11th August 1931. H. C. BOSE, Collector (offg.).

Advertisement of sale.

(*See* Rule 161.)

NOTICE is hereby given that the proprietary right of Government, as specified in the conditions of sale below, to the undermentioned estate situate in the district of Burdwan will be put up to sale at the Burdwan Collectorate on 25th September 1931, corresponding with 1338 B. S.

The purchasers will be subject to the following conditions of sale :—

Conditions of sale.

1st.—The estate to be sold to the highest bidder above the upset price, which will be fixed by the Collector at the time of sale. The purchaser of this estate will be considered as the proprietor of the estate, and the entire proprietary right of Government in such estate will be transferred to him revenue free.

2nd.—The sale to be subject to existing leases and to the rights conferred by the settlement proceedings, and by the laws in force, and purchasers to be bound to respect the rights of resident cultivators who have signed the schedule of assessment prepared by the revenue authorities.

3rd.—If the amount of purchase money do not exceed Rs. 100 the whole amount to be paid down at once.

4th.—If the amount of purchase money exceed Rs. 100 one-fourth of the amount bid to be immediately deposited. If the balance be not paid by noon of the fifteenth day after the sale, reckoning the day of sale as one or, if that day be a close holiday, then by noon of the first succeeding office day, the sale is to be cancelled (the sum deposited being forfeited to Government), and the estate to be again put up to sale at the risk of the defaulting purchaser, after issue of advertisement, as in the case of original sale.

Number on the district roll.	Name of estate and pargana.	Approximate area in acres.	Government revenue assessed.
			Rs. A. P.
3610	Mandra	·46	0 11 0

Burdwan, the 11th August 1931.

H. C. BOSE, Collector (offg.).

Notice.

PURSUANT to the orders of Government, dated the 29th June 1881, particulars of the undernoted articles, held by the Calcutta Port Commissioners as Receivers of Wrecks, each article being of value exceeding Rs. 100, are published for general information in accordance with the provisions of section 276 of Act XXI of 1923.

No. and date in Recovery Register.			Description of articles.	Approximate value.	Where and when recovered.	Where lying.
				Rs.		
August 1931 ..	11th	4 P. A.	92½ fms. 2¾″ studlink chain ..	2,153 0 0	Jellingham Channel.	River bank close to Tuckta Ghat.
			5 „ 2¾″ „ „ ..	147 0 0		
			3¼ ton stockless anchor ..	857 8 0		
			Total ..	3,157 8 0		

C. V. L. NORCOCK, Deputy Conservator.

Port Commissioners' Office, Calcutta, the 11th August 1931.

(1729—3)

In the Court of the District Judge, Gaya.

MORTGAGE SUIT No. 2 OF 1931.

Babu Rajniti Prasad Singh and others of Mohalla Madhopur in the town of Monghyr, plaintiffs,

versus

Sri Shyam Lal Singh, popularly known as Raja Shyam Lal Singh, and others, defendants.

Notice to—(1) Messrs. Chari & Co., Ltd., incorporated under the Indian Companies Act and having their registered office at No. 2, Lyon's Range, Calcutta, and (2) B. D. Banerjee & Co., 31, Jackson Lane, Calcutta.

TAKE notice that a mortgage suit has been received from the Settlement Officer, Dumka, based on two mortgage bonds, dated the 20th Magh 1319 B.S. and 2nd Joth 1334 B.S., in which you are said to be subsequent mortgagees and the aforesaid plaintiffs have applied for appointment of a Receiver for the defendants' estate and it has been fixed for the 25th of August 1931 for hearing.

If no appearance is made on your behalf either personally or through a pleader or some one authorised to act on your behalf, the matter will be heard and decided in your absence.

A. N. CHATTERJI, District Judge.

Gaya, the 1st August 1931. (1634—1—1720)

In the 1st Court of the Sub-Judge, Midnapore.

MONEY EXECUTION CASE No. 45 OF 1931.

Monoranjan Chaudhuri of Garh Chilki, pargana Jamboni, district Midnapore, decree-holder,

versus

(1) Madhon Marwari, (2) Chhujuram Marwari, proprietors of Mahabir Rice Mill, Jhargram, district Midnapore.

Claim for Rs. 6,239-5.

Date of sale—15th September 1931.

Schedule of properties to be sold.

DISTRICT MIDNAPORE, police-station Jhargram, sub-registry Jhargram, mauza Bonbamondi *alias* Jhargram, tauzi No. 859, settlement interest No. 31.

Settlement plots 36, 37, 38, 39, 42, 43, 46 and 47, Kala lands measuring 9 bighas and 15 kattas together with the Mahabir Rice Mills, *chatals* or pucca floors, boiler engine and mill engine rooms, godowns, dwelling houses on it and three wells and two cisterns in it as also the engines, boilers, rollers, etc., permanently fixed on the land as well as the land itself.

The annual rent for the land Rs. 20-4 is to be paid to Mahammad Amir Ali of Barabazar, town Midnapore. The judgment debtors have mokrari raiyati interest in the land.

Approximate price of the land, etc., is Rs. 15,000.

B. MUSTAFHI, Sub-Judge.

Midnapore, the 7th August 1931. (1669—1—1726)

In the Court of the Sub-Judge at Jessore.

MORTGAGE EXECUTION CASE No. 66 OF 1931.

Registered Jessore Loan Company, Limited, Jessore, decree-holder,

versus

Babu Gopal Hari Ghosh Choudhury and others, of Ramnagar, judgment-debtors.

THE following immovable property of the judgment-debtors will be sold at auction sale at 1 p.m. on the 21st day of September 1931 by the Nazir of the Court in the abovementioned execution case for realization of the decretal amount and costs amounting to Rs. 38,041-13-3 under the mortgage decree No. 147 of 1927 of the Sub-Judge's Court, Jessore.

Schedule of property.

1. Whatever right, title and interest the judgment-debtors have in three annas, four gandas share in touzi No. 101 of Jessore Collectorate, *hal* touzi No. 967 of Khulna Collectorate, parganas Hogla, Joypur and Belpuli within the jurisdiction of police-stations Khulna, Bagerhat and Kalia, bearing annual revenue of Rs. 9,324-2-9. Approximate value Rs. 15,000.

N. N. BASU, Sub-Judge.

Jessore, the 7th August 1931. (1670—1—1723)

SUMMONS FOR DISPOSAL OF SUIT.

In the 3rd Court of the Sub-Deputy Collector at Deoghar, district Santal Parganas.

RENT SUIT No. 179 OF 1931.

To Purnanand Chatterjee.

WHEREAS the receiver of the Rohini estate has instituted a rent suit against you for Rs. 111-7-6 as arrears of rent from 1334 to 1336 B.S. with interest for the holding standing in your name in mauza Shyamganj, Deoghar town, you are hereby summoned to appear in this Court in person or by your authorised agent to answer the claim on the 11th day of September 1931 at 10-30 a.m., failing which the case should be decided *ex parte*.

Given under my hand and seal of this Court this 10th day of August 1931.

S. A. ALI, Sub-Deputy Collector.

(1703—2—1731)

SUMMONS FOR DISPOSAL OF SUIT.

In the 3rd Court of the Sub-Deputy Collector at Deoghar, district Santal Parganas.

RENT SUIT No. 176 OF 1931.

To Kalidas Nandy.

WHEREAS the receiver of the Rohini estate has instituted a rent suit against you for Rs. 23-7 as arrears of rent from 1334 to 1336 B. S. with interest for the holding standing in your name in mauza Shyamganj, Deoghar town, you are hereby summoned to appear in this Court in person or by your authorised agent to answer the claim on the 11th day of September 1931 at 10-30 a.m., failing which the case should be decided *ex parte*.

Given under my hand and seal of this Court this 10th day of August 1931.

S. A. ALI, Sub-Deputy Collector.

(1704—2—1732)

SUMMONS FOR DISPOSAL OF SUIT.

In the 3rd Court of the Sub-Deputy Collector at Deoghar, district Santal Parganas.

RENT SUIT No. 180 OF 1931.

To Suprava Dassi.

WHEREAS the receiver of the Rohini estate has instituted a rent suit against you for Rs. 76-14 as arrears of rent from 1334 to 1336 B.S. with interest for the holding standing in your name in mauza Shyamganj, Deoghar town, you are hereby summoned to appear in this Court in person or by your authorised agent to answer the claim on the 11th day of September 1931, at 10-30 a.m., failing which the case should be decided *ex parte*.

Given under my hand and seal of this Court this 10th day of August 1931.

S. A. ALI, Sub-Deputy Collector.

(1705—2—1733)

SUMMONS FOR DISPOSAL OF SUIT.

In the 3rd Court of the Sub-Deputy Collector at Deoghar, district Santal Parganas.

RENT SUIT No. 151 OF 1931.

To Madhab Chandra Bhaumik.

WHEREAS the receiver of the Rohini estate has instituted a rent suit against you for Rs. 53-13 as arrears of rent from 1334 to 1336 B.S. with interest for the holding standing in your name in mauza Bompas, town Deoghar, you are hereby summoned to appear in this Court in person or by your authorised agent to answer the claim on the 8th day of September 1931 at 10-30 a.m., failing which the case should be decided *ex parte*.

Given under my hand and seal of this Court this 10th day of August 1931.

S. A. ALI, Sub-Deputy Collector.

(1706—2—1734)

SUMMONS FOR DISPOSAL OF SUIT.

In the 3rd Court of the Sub-Deputy Collector at Deoghar district Santal Parganas.

RENT SUIT No. 104 of 1931.

To Khitish Chandra Banerjee.

WHEREAS the receiver of the Rohini estate has instituted a rent suit against you for Rs. 76-14 as arrears of rent from 1334 to 1336 B. S. with interest for the holding standing in your name in mauza Baghmara, you are hereby summoned to appear in this Court in person or by your authorised agent to answer the claim on the 15th day of September 1931, at 10-30 a.m., failing which the case should be decided *ex parte*.

Given under my hand and seal of this Court this 10th day of August 1931.

S. A. ALI, Sub-Deputy Collector.

(1707—2—1735)

SUMMONS FOR DISPOSAL OF SUIT.

In the 3rd Court of the Sub-Deputy Collector at Deoghar, district Santal Parganas.

RENT SUIT No. 103 of 1931.

To Jotish Chandra Rai Chaudhury.

WHEREAS the receiver of the Rohini estate has instituted a rent suit against you for Rs. 76-14 as arrears of rent from 1334 to 1336 B. S. with interest for the holding standing in your name in mauza Baghmara, you are hereby summoned to appear in this Court in person or by your authorised agent to answer the claim on the 28th day of August 1931 at 10-30 a.m., failing which the case should be decided *ex parte*.

Given under my hand and seal of this Court this 10th day of August 1931.

S. A. ALI, Sub-Deputy Collector.

(1708—2—1736)

SUMMONS FOR DISPOSAL OF SUIT.

In the 3rd Court of the Sub-Deputy Collector at Deoghar, district Santal Parganas.

RENT SUIT No. 102 of 1931.

To Babu Tarini Charan Chakrabarty.

WHEREAS the receiver of the Rohini estate has instituted a rent suit against you for Rs. 56-4 as arrears of rent from 1334 to 1336 B. S. with interest for the holding standing in your name in mauza Shamganj, Deoghar town, you are hereby summoned to appear in this Court in person or by your authorised agent to answer the claim on the 28th day of August 1931, at 10-30 a.m., failing which the case should be decided *ex parte*.

Given under my hand and seal of this Court this 10th day of August 1931.

S. A. ALI, Sub-Deputy Collector.

(1709—2)

In the High Court of Judicature at Fort William in Bengal, in insolvency.

NOTICE OF ADJUDICATION ORDER.

No. 189 of 1931.

Re Bhabes Chandra Nandy, residing at No. 30, Wellington Street, in the town of Calcutta, carrying on business as dealer in sugar, flour and other groceries under the firm and style of Messrs. B. C. Nandy at No. 30, Wellington Street, in Calcutta and other places, Dacca, Kishoreganj and Mymensingh, *ex parte* the debtor.

Suros C. Bose, debtor's solicitor.

ON the 5th day of August 1931, an order was made by the High Court of Judicature at Fort William in Bengal in its insolvency jurisdiction adjudging the abovenamed as an insolvent.

NOTE.—All debts due to the estate should be paid to me.

Dated this 12th day of August 1931.

G. M. FALKNER, Official Assignee.

In the High Court of Judicature at Fort William in Bengal, in insolvency.

NOTICE OF ADJUDICATION ORDER.

No. 190 of 1931.

Re Naren Kristo Kundu, residing at No. 16, Baloram Dey Street, in the town of Calcutta, and carrying on business as hardware merchant at No. 55, Clive Street, in Calcutta aforesaid, under his own name, *ex parte* the debtor in person.

ON the 6th day of August 1931, an order was made by the High Court of Judicature at Fort William in Bengal in its insolvency jurisdiction adjudging the abovenamed as an insolvent.

NOTE.—All debts due to the estate should be paid to me.

Dated this 12th day of August 1931.

G. M. FALKNER, Official Assignee.

In the High Court of Judicature at Fort William in Bengal, in insolvency.

NOTICE OF ADJUDICATION ORDER.

No. 191 of 1931.

Re Bhupendra Nath Mitter, residing at No. 69, Kali Dutt Street, in the town of Calcutta, a Government service-holder, *ex parte* the debtor in person.

ON the 6th day of August 1931, an order was made by the High Court of Judicature at Fort William in Bengal in its insolvency jurisdiction adjudging the abovenamed as an insolvent.

NOTE.—All debts due to the estate should be paid to me.

Dated this 12th day of August 1931.

G. M. FALKNER, Official Assignee.

In the High Court of Judicature at Fort William in Bengal, in insolvency.

NOTICE OF ADJUDICATION ORDER.

No. 192 of 1931.

Re Lewis Francis, lately residing at No. 57, McLeod Street, in the town of Calcutta, but at present residing at No. 67, New Theatre Road, Calcutta, a pleader in the Small Cause Court, Bankshall Street, Calcutta, *ex parte* the debtor in person.

ON the 6th day of August 1931, an order was made by the High Court of Judicature at Fort William in Bengal in its insolvency jurisdiction adjudging the abovenamed as an insolvent.

NOTE.—All debts due to the estate should be paid to me.

Dated this 11th day of August 1931.

G. M. FALKNER, Official Assignee.

In the High Court of Judicature at Fort William in Bengal, in insolvency.

NOTICE OF ADJUDICATION ORDER.

No. 193 of 1931.

Re Moses Aaron Cohen, residing at No. 8, Sudder Street, in the town of Calcutta, lately a landholder but at present without any occupation, *ex parte* the debtor in person.

ON the 6th day of August 1931, an order was made by the High Court of Judicature at Fort William in Bengal in its insolvency jurisdiction adjudging the abovenamed as an insolvent.

NOTE.—All debts due to the estate should be paid to me.

Dated this 11th day of August 1931.

G. M. FALKNER, Official Assignee.

In the High Court of Judicature at Fort William in Bengal, in insolvency.

NOTICE OF ADJUDICATION ORDER.

No. 194 of 1931.

Re Durlav Das, residing at No. 53, Ezra Street, in the town of Calcutta, working as a freight and insurance broker, *ex parte* the debtor in person.

ON the 7th day of August 1931, an order was made by the High Court of Judicature at Fort William in Bengal in its insolvency jurisdiction adjudging the abovenamed as an insolvent.

NOTE.—All debts due to the estate should be paid to me.

Dated this 12th day of August 1931.

G. M. FALKNER, Official Assignee.

In the High Court of Judicature at Fort William in Bengal, in Insolvency.

NOTICE is hereby given to the undermentioned insolvents that owing to their not having applied for their discharge within eighteen months of the order of adjudication made against them the Registrar-in-insolvency, High Court, Calcutta, has fixed Monday, the 21st day of September 1931, at 11 o'clock in the forenoon, for the hearing by him of the Official Assignee's applications, under section 41 of the Presidency Towns Insolvency Act III of 1909 and rule 142A made thereunder, for orders of annulment of the respective adjudication orders. Insolvents desirous of having the hearing postponed must apply to the Registrar-in-insolvency and not to the undersigned. : –

Adjudication orders.		Insolvents.
Nos.	Dates.	
10	12-1-24	Krishna Dass and Brij Mohan Dass (Firm of K. D. & Bros.).
17	19-1-24	Hira Lal Mohan Lal.
22	1-2-24	Firm of Sewnarain Harchandroy.
30	30-1-24	Nilkamal Ghose.
61	11-3-24	Ramnivas Saraogi.
134	17-6-24	Probhat Chandra Mitra.
171	21-8-24	Kristo Dhone Dawn.
206	25-9-24	Horace Hitchins Manly.
241	18-12-24	Megji Ratanjee and Girdhari Lal Ratanjee.
245 of 1924.	17-3-25	Khemkaran Das Khemka.
134	11-7-29	Abinash Chandra Shome.
146	30-7-29	Mulla Kasimji Mulla Budruddin.
148	1-8-29	Mahadeo Lal Marwari.
149	1-8-29	Mahadeo Pandey.
151	3-8-29	Edgar Bertram Harlow.
152	3-8-29	John Harlow.
154	9-8-29	Emile D'Abadie Onraet.
157	23-8-29	Nundo Lal Mundra.
159	24-8-29	Parsottamdas and Kedar Nath.
164	28-8-29	Bankim Chandra Roy Chowdhuri.
168	31-8-29	Sohon Lall Singhee and Surajratton Singhee *alias* Chatoo.
170	30-8-29	Gogan Chandra Dhur.
171	26-11-29	Chedi Lall Khettry.
172	4-9-29	Mahammed Shariff.
177	6-9-29	Keso Prosad Choubey.
179	10-9-29	Victor George Frank.
180	10-9-29	Sagarmull Bubna and Jaidyal Bubna *alias* Agarwalla.
182	14-9-29	Kala Chand Jeswara.
184	17-9-29	Janaki Nath Sarkar.
185	17-9-29	Alice Rebecca Golightly.
187	23-9-29	Jadunath Prosad.
188	25-9-29	Mohamed Shariff.
189	25-9-29	Maud Constance Brown.
190	26-9-29	Heeralal Khandelwal.
193	18-11-29	Susila Bala Dassi.
194	15-11-29	Charles Jeffrey Moody.
195	18-11-28	Charles Jones also known as C. H. Jones.
196	18-11-29	Bhagirath Baity.
198	19-11-29	Durgadutt Jalan.
199	19-11-29	Ram Naram and Misri Lall.
200	20-11-29	Ram Ratan Sukul.
206	29-11 29	John William Jolly.
210	3-12-29	Khitish Chandra Das.
211	4-12-29	Mukunda Lal Chakravarti.
214	17-12-29	Inder Chand Dooger.
217	10-12-29	Mahtadin Shah.
218	12-12-29	Walter Torence Eaton.
221	18-12-29	Ralph Harold Dutton.
224	19-12-29	Girija Bhusan Banerjee.
250	22-11-11	Sital Prosad, Binderchal Prosad, Bindasari Prosad and Harihar Prosad.

G. M. FALKNER, Official Assignee.

10, Old Post Office Street, Calcutta, the 13th August 1931.

(1718—1)

In the High Court of Judicature at Fort William in Bengal, in Insolvency.

No. 230 of 1928.

Re Estate Sarat Chandra Sanyal.

NOTICE is hereby given that a 2nd dividend is intended to be declared in the above estate.

Persons claiming to be creditors of the estate must submit their claims in this office duly supported by affidavit and necessary vouchers by the 31st August 1931 after which date no claims received by this office will be considered.

Persons who have already lodged their claims need not file any fresh claim.

A form of affidavit may be had on application.

G. M. FALKNER, Official Assignee.

10, Old Post Office Street, Calcutta, 8th August 1931.

(1694—1)

In the High Court of Judicature at Fort William in Bengal, in Insolvency.

No. 90 of 1929.

Re Estate Sattya Charan Dhur.

NOTICE is hereby given that a dividend is intended to be declared in the above estate by the 30th November next.

Persons claiming to be creditors of the above estate are hereby required to file their claims in this office duly supported by affidavit and necessary vouchers by the 31st instant after which date claims received by this office will not be considered.

Persons who have already lodged their claims need not file any fresh claim.

A form of proof of debt may be had on application.

G. M. FALKNER, Official Assignee.

10, Old Post Office Street, Calcutta, the 13th August 1931. (1719—1)

In the Court of the District Judge of Bankura.

NOTICE is hereby given under clause (2) of section 19 of the Provincial Insolvency Act, V of 1920, to his creditors that the insolvency petition of Kalipada Nag of Bankura town, thana Bankura, district Bankura, has been admitted by this Court as No. 4 of 1931 and that 5th September 1931 has been fixed for hearing thereof.

K. C. GUPTA, District Judge.

Bankura, the 6th August 1931. (1668—1—1722)

NOTICE TO CREDITORS OF THE DATE OF HEARING OF AN INSOLVENCY PETITION.

Section 19 of the Provincial Insolvency Act, V of 1920.

In the Court of the District Judge at Chittagong.

INSOLVENCY APPLICATION No. 27 of 1931.

WHEREAS Adam Hajee Peer Mahammed Essak of Bantra, in the district of Kathiwar, at present of Strand Road, Chittagong, has applied to this Court by a petition, dated 9th day of July 1931, to have Jogendra Lal Bhattacharjee, son of Haradas Bhattacharjee of Shakpura, police-station Boalkhali, at present Chaktai, police-station Panchalaish, Chittagong, declared an insolvent under the Provincial Insolvency Act, V of 1920, this is to give notice to the debtor and all others concerned that the Court has fixed the 1st day of September 1931 for the hearing of the aforesaid petition and the examination of the petitioner.

J. YOUNIS, District Judge.

(1632—1—1721)

In the 3rd Court of the Sub-Judge, Dacca.

INSOLVENCY CASE No. 42 of 1931.

NOTICE is hereby given to all concerned that Messrs. (1) Haridas Suklall Saha carrying on business at Simulia, police-station Lohajang, district Dacca, (2) Monomohan Gopal Krishna Saha of Simulia, police-station Kumarbhog, district Dacca, filed a petition on 2nd July 1931 to adjudicate (1) Purna Chandra Saha, son of late Chaitan Krishna Saha, (2) Harendra Chandra Saha, son of Purna Chandra Saha, of Kharia, police-station Lohajang, district Dacca, insolvents. The date of hearing of the suit has been fixed on 31st August 1931.

S. C. SIL, Senior Sub-Judge.

Dacca, the 4th August 1931. (1666—1)

In the Court of the District Judge of Dinajpur.

INSOLVENCY CASE No. 55 OF 1931.

DINESH CHANDRA GHATAK, son of late Kailash Chandra Ghatak, resident of Dayalhat, police-station Tapan, district Dinajpur, has applied to this Court for being adjudged insolvent. The 5th day of September 1931 has been fixed for examination of the petitioner at Dinajpur.

H. G. WAIGHT, District Judge.

Dinajpur, the 8th August 1931. (1677 1)

In the Court of the District Judge of Dinajpur.

INSOLVENCY CASE No. 67 OF 1930.

HAJIRUDDIN SARKER, son of Hasham Mahammad, deceased, resident of Shikdarpara, police-station Pirganj, district Dinajpur, has applied for discharge. The Court has fixed the 3rd September 1931 for hearing the petition at Dinajpur.

H. G. WAIGHT, District Judge.

Dinajpur, the 8th August 1931. (1678—1)

In the Court of the District Judge of Jalpaiguri.

INSOLVENCY CASE No. 68 OF 1929.

SAIFUDDIN AHMED PRAMANIK, son of Khalil Mahammad Pramanik, deceased, resident of Pramanikpara, police-station Boda, district Jalpaiguri, having failed to prosecute the application for discharge, the order passed on the 14th day of February 1930 declaring him an insolvent be and the same is hereby annulled.

H. G. WAIGHT, District Judge.

Dinajpur, the 11th August 1931.

In the Court of the District Judge of Hooghly.

NOTICE is hereby given, under clause (*2*) of section 12 of the Provincial Insolvency Act, V of 1920, to his creditors that the insolvency petition of Jogesh Chandra Chatterjee, son of late Manmatha Nath Chatterjee, of Telinipara, thana Bhadreswar, district Hooghly, has been admitted by this Court as No. 48 of 1931 and that the 27th August 1931 has been fixed for the hearing thereof.

S. SEN, District Judge.

Chinsura, the 30th July 1931. (1674—1—1727)

In the Court of the District Judge of Hooghly.

INSOLVENCY PETITION No. 26 OF 1929.

NOTICE is hereby given that Chandi Gopal Ray, son of late Parbati Charan Ray, of Akuhati, thana Jangipara, district Hooghly, was on the 21st day of July 1931 adjudged an insolvent. The 1st day of September 1931 has been fixed for framing a schedule and creditors are required to prove their claims on that day.

S. MUKERJI, *for* District Judge.

Chinsura, the 3rd August 1931. (1675—1—1728)

In the Court of the Addl. Sub-Judge, Malda.

INSOLVENCY CASE No. 6 OF 1931.

NOTICE is hereby given under the Provincial Insolvency Act, V of 1920, to his creditor that the petition of Sadik Momin, son of late Hazi Kadir Boksha Momin, of Lakhipore, police-station Kaliachak, district Malda, has been admitted by this office in this case and that the 5th day of September 1931 has been fixed for hearing thereof.

N. N. GUHA, Addl. Sub-Judge.

Malda, the 6th August 1931. (1696—1)

In the Court of the District Judge of Rajshahi.

INSOLVENCY CASE No. 120 OF 1930.

NOTICE is hereby given that Ainuddin Mondal of Chak Pathuria, police-station Naogaon, district Rajshahi, has applied under Act V of 1920 for his discharge and that 22nd August 1931 is fixed for hearing of the application.

K. N. DUTT, *for* District Judge.

Rajshahi, the 6th/7th August 1931. (1697—1—1729)

In the Court of the District Judge of Rajshahi.

INSOLVENCY CASE No. 47 OF 1930.

NOTICE is hereby given that the order adjudicating Badiullaya Pramanik, insolvent, of Patial, police-station Tanor, district Rajshahi, has been annulled on 3rd August 1931, and it was further ordered that a notice thereof be published in the *Calcutta Gazette*.

K. N. DUTT, *for* District Judge.

Rajshahi, the 5th/7th August 1931. (1698—1 1736)

In the Court of the District Judge of Rangpur.

INSOLVENCY CASE No. 17 OF 1931.

ON the application of the debtor Rasik Chandra Barman, son of late Bishad Barman, of Mirganj Shimulbari, police-station Jaldhaka, in Rangpur, for being adjudged an insolvent, the 27th day of August 1931 has been fixed for hearing the aforesaid petition and the examination of the debtor.

A. M. AHMAD, District Judge.

Rangpur, the 7th August 1931. (1667—1)

ORDER ANNULLING ADJUDICATION.

Section 43 of the Provincial Insolvency Act, V of 1920.

In the 4th Court of the Sub-Judge at Alipore.

INSOLVENCY APPLICATION No. 294 OF 1930.

Narain Muchi of Chakta, police-station Bijpore, 24-Parganas, applicant.

WHEREAS Narain Muchi of Chakta, police-station Bijpore, 24-Parganas, debtor, does neither appear nor apply for his discharge within the specified time fixed for hearing, it is ordered that the order of adjudication, dated 27th January 1931, against the debtor be and the same is hereby annulled.

Dated this 10th day of August 1931.

S. N. ROY, Sub-Judge.

ORDER ANNULLING ADJUDICATION.

Section 43 of the Provincial Insolvency Act, V of 1920.

In the 4th Court of the Sub-Judge at Alipore.

INSOLVENCY APPLICATION No. 327 OF 1930.

Prakash Chandra Chakravorty, applicant.

WHEREAS Prakash Chandra Chakravorty of 3, Narkelbagan Lane, police-station Beliaghata, debtor, does neither appear nor apply for his discharge within the specified time fixed for hearing, it is ordered that the order of adjudication, dated 3rd February 1931, against the debtor be and the same is hereby annulled.

Dated this 4th day of August 1931.

S. N. ROY, Sub-Judge.

ORDER ANNULLING ADJUDICATION.

Section 43 of the Provincial Insolvency Act, V of 1920.

In the 4th Court of the Sub-Judge at Alipore.

INSOLVENCY APPLICATION No. 367 OF 1930.

Bowri Mollik, applicant.

WHEREAS Bowri Mollik of 10, Garden Reach, B. N. Railway, debtor, does neither appear nor apply for his discharge within the specified time fixed for hearing, it is ordered that the order of adjudication, dated 3rd February 1931, against the debtor be and the same is hereby annulled.

Dated this 4th day of August 1931.

S. N. ROY, Sub-Judge.

NOTICE TO CREDITORS OF APPLICATION FOR DISCHARGE.

Section 41 (*1*) of the Provincial Insolvency Act, V of 1920.

In the 4th Court of the Sub-Judge at Alipore.

INSOLVENCY CASE No. 302 OF 1929.

Ratan Singh of Bijpore, 24-Parganas, applicant.

TAKE notice that the abovenamed insolvent has applied at the Court for his discharge, and that the Court has fixed the 24th day of August 1931, at 11 o'clock, for hearing the application.

Dated this 10th day of July 1931.

S. N. ROY, Sub-Judge.

(1617—1—1706)

NOTICE TO CREDITORS OF APPLICATION FOR DISCHARGE.

Section 41(1) of the Provincial Insolvency Act, V of 1920.

In the 4th Court of the Sub-Judge at Alipore.

INSOLVENCY CASE No. 359 OF 1930.

Mr. O. Fargusson of 53-1, South Road, Entally, police-station Entally, 24-Parganas, applicant.

TAKE notice that the abovenamed insolvent has applied at the Court for his discharge, and that the Court has fixed the 31st day of August 1931, at 11 o'clock, for hearing the application.

Dated this 24th day of July 1931.

S. N. ROY, Sub-Judge.

(1618—1—1707)

ORDER OF ADJUDICATION.

Section 27 of the Provincial Insolvency Act, V of 1920.

In the 4th Court of the Sub-Judge at Alipore.

INSOLVENCY APPLICATION No. 50 OF 1931.

PURSUANT to a petition, dated 31st January 1931, filed by Shaik Madar Baksh of Basakbagan, Cossipore, police-station Cossipore, 24-Parganas, debtor, and on the application of the debtor himself and on reading his application and hearing his pleader, it is ordered that the debtor be and the said debtor is hereby adjudged insolvent.

It is further ordered that the debtor do apply for his discharge within six months from this date.

Dated this 21st day of July 1931.

S. N. ROY, Sub-Judge.

(1619—1—1708)

ORDER OF ADJUDICATION.

Section 27 of the Provincial Insolvency Act, V of 1920.

In the 4th Court of the Sub-Judge at Alipore.

INSOLVENCY APPLICATION No. 69 OF 1931.

PURSUANT to a petition, dated 11th February 1931, against Atul Krishna Biswas, c-o Jogendra Lall Neogi, Barrackpore Trunk Road, Nainan, police-station Baranagore, debtor, and on the application of Nilmony Soor, at present of Chandernagore, district Hooghly, creditor, and on reading the creditor's application and hearing his pleader, it is ordered that the debtor be and the said debtor is hereby adjudged insolvent.

It is further ordered that the debtor do apply for his discharge within six months from this date.

Dated this 21st day of July 1931.

S. N. ROY, Sub-Judge.

(1620—1—1709)

ORDER OF ADJUDICATION.

Section 27 of the Provincial Insolvency Act, V of 1920.

In the 4th Court of the Sub-Judge at Alipore.

INSOLVENCY APPLICATION No. 89 OF 1931.

PURSUANT to a petition, dated 27th February 1931, filed by Sk. Aziz Mia of Kharda Matkoler Line, police-station Kharda, 24-Parganas, debtor, and on the application of the debtor himself and on reading his application and hearing his pleader, it is ordered that the debtor be and the said debtor is hereby adjudged insolvent.

It is further ordered that the debtor do apply for his discharge within six months from this date.

Dated this 21st day of July 1931.

S. N. ROY, Sub-Judge.

(1621—1—1710)

ORDER OF ADJUDICATION.

Section 27 of the Provincial Insolvency Act, V of 1920.

In the 4th Court of the Sub-Judge at Alipore.

INSOLVENCY APPLICATION No. 100 OF 1931.

PURSUANT to a petition, dated 7th March 1931, filed by Meher Ali Shaikh of Kazipara, police-station Baruipore, debtor, and on the application of the debtor himself and on reading his application and hearing his pleader, it is ordered that the debtor be and the said debtor is hereby adjudged insolvent.

It is further ordered that the debtor do apply for his discharge within six months from this date.

Dated this 21st day of July 1931.

S. N. ROY, Sub-Judge.

(1622—1—1711)

ORDER OF ADJUDICATION.

Section 27 of the Provincial Insolvency Act, V of 1920.

In the 4th Court of the Sub-Judge at Alipore.

INSOLVENCY APPLICATION No. 103 OF 1931.

PURSUANT to a petition, dated 10th December 1930, filed by Hari Charan Ghosh Sadhukhan, of Garifa, police-station Naihati, debtor, and on the application of the debtor himself and on reading his application and hearing his pleader, it is ordered that the debtor be and the said debtor is hereby adjudged insolvent.

It is further ordered that the debtor do apply for his discharge within six months from this date.

Dated this 21st day of July 1931.

S. N. ROY, Sub-Judge.

(1623—1—1712)

ORDER OF ADJUDICATION.

Section 27 of the Provincial Insolvency Act, V of 1920.

In the 4th Court of the Sub-Judge at Alipore.

INSOLVENCY APPLICATION No. 118 OF 1931.

PURSUANT to a petition, dated 23rd March 1931, filed by Panchkori Nath of Behala, police-station Behala, 24-Parganas, debtor, and on the application of the debtor himself and on reading his application and hearing his pleader, it is ordered that the debtor be and the said debtor is hereby adjudged insolvent.

It is further ordered that the debtor do apply for his discharge within six months from this date.

Dated this 21st day of July 1931.

S. N. ROY, Sub-Judge.

(1624—1—1713)

ORDER OF ADJUDICATION.

Section 27 of the Provincial Insolvency Act, V of 1920.

In the 4th Court of the Sub-Judge at Alipore.

INSOLVENCY APPLICATION No. 130 OF 1931.

PURSUANT to a petition, dated 2nd April 1931, filed by Radhica Mohan Pall of 55, Middle Road Entally, 24-Parganas, debtor, and on the application of the debtor himself and on reading his application and hearing his pleader, it is ordered that the debtor be and the said debtor is hereby adjudged insolvent.

It is further ordered that the debtor do apply for his discharge within six months from this date.

Dated this 21st day of July 1931.

S. N. ROY, Sub-Judge.

(1625—1—1714)

ORDER OF ADJUDICATION.

Section 27 of the Provincial Insolvency Act, V of 1920.

In the 4th Court of the Sub-Judge at Alipore.

INSOLVENCY APPLICATION No. 135 OF 1931.

PURSUANT to a petition, dated 7th April 1931, filed by Pankoje Kumar Dutta of 28, Sambhu Nath Pandit Street, Bhowanipore, debtor, and on the application of the debtor himself and on reading his application and hearing his pleader, it is ordered that the debtor be and the said debtor is hereby adjudged insolvent.

It is further ordered that the debtor do apply for his discharge within six months from this date.

Dated this 21st day of July 1931.

S. N. ROY, Sub-Judge.

(1626—1—1715)

ORDER OF ADJUDICATION.

Section 27 of the Provincial Insolvency Act, V of 1920.

In the 4th Court of the Sub-Judge at Alipore.

INSOLVENCY APPLICATION No. 158 OF 1931.

PURSUANT to a petition, dated 22nd April 1931, filed by Sk. Kasim of 16, Bibirbagan, police-station Entally, 24-Parganas, debtor, and on the application of the debtor himself and on reading his application and hearing his pleader, it is ordered that the debtor be and the said debtor is hereby adjudged insolvent.

It is further ordered that the debtor do apply for his discharge within six months from this date.

Dated this 21st day of July 1931.

S. N. ROY, Sub-Judge.

(1627—1—1716)

ORDER OF ADJUDICATION.

Section 27 of the Provincial Insolvency Act, V of 1920.

In the 4th Court of the Sub-Judge at Alipore.

INSOLVENCY APPLICATION No. 161 OF 1931.

PURSUANT to a petition, dated 23rd April 1931, filed by Shaikh Ishaque of Nagda, police-station Bijpore, debtor, and on the application of the debtor himself and on reading his application and hearing his pleader, it is ordered that the debtor be and the said debtor is hereby adjudged insolvent.

It is further ordered that the debtor do apply for his discharge within six months from this date.

Dated this 21st day of July 1931.

S. N. ROY, Sub-Judge.

(1628—1—1717)

ORDER OF ADJUDICATION.

Section 27 of the Provincial Insolvency Act, V of 1920.

In the 4th Court of the Sub-Judge at Alipore.

INSOLVENCY APPLICATION No. 170 OF 1931.

PURSUANT to a petition, dated 1st May 1931, filed by Shaikh Kader Koshai of 11-14, Chamru Sing Lane, police-station Beliaghata, 24-Parganas, debtor, and on the application of the debtor himself and on reading his application and hearing his pleader, it is ordered that the debtor be and the said debtor is hereby adjudged insolvent.

It is further ordered that the debtor do apply for his discharge within six months from this date.

Dated this 21st day of July 1931.

S. N. ROY, Sub-Judge.

(1629—1—1718)

ORDER OF ADJUDICATION.

Section 27 of the Provincial Insolvency Act, V of 1920.

In the 4th Court of the Sub-Judge at Alipore.

INSOLVENCY APPLICATION No. 173 OF 1931.

PURSUANT to a petition, dated 5th May 1931, filed by Seraj Ahmed of 8, Alipore Road, Woodland, in the quarter of Siddique Ahmed, guard, police-station Alipore, debtor, and on the application of the debtor himself and on reading his application and hearing his pleader, it is ordered that the debtor be and the said debtor is hereby adjudged insolvent.

It is further ordered that the debtor do apply for his discharge within six months from this date.

Dated this 21st day of July 1931.

S. N. ROY, Sub-Judge.

(1630—1—1719)

In the Court of the District Judge of 24-Parganas.

INSOLVENCY CASE No. 39 OF 1931.

Narendra Nath Das, of 258/17, Upper Circular Road, Beliaghata, 24-Parganas, applicant.

To P. C. Seal and Sons, of 80, Prinsep Street, Calcutta, and others, creditors.

ON the 1st day of August 1931, it was ordered that the matter of the petition of the applicant be heard on the 31st day of August 1931 and that the said applicant do attend to be examined by this Court on that date.

A. L. BLANK, District Judge.

Alipore, the 4th August 1931. (1644—1—1739)

ANIL CHANDRA DUTTA, M.A., B.L., intends to be enrolled as an Advocate of the Calcutta High Court.

(1544—4—1558)

ASHOKE NATH MUKHERJI, B.L., M.SC., intends to be enrolled as an Advocate, Calcutta High Court.

(1536—4—1536)

BISNURAM MEDHI, M. SC., B.L., of Gauhati, intends to be enrolled as an Advocate, High Court, Calcutta.

(1541—4—1540)

HOLIRAM DEKA, M.A., B.L., intends to be enrolled as an Advocate of the High Court, Calcutta.

(1575—4—1594)

MR. DHIRENDRA NATH GUHATHAKURTA intends to be enrolled as an Advocate, Calcutta High Court.

(1537—4—1537)

MR. DEBENDRA NATH DATTA intends to be enrolled as an Advocate of the High Court, Calcutta.

(1545—4—1542)

MR. DHIRENDRA MOHAN DEB, B.L., intends to enroll himself as an Advocate of the Calcutta High Court.

(1558—4—1546)

MR. ATINDRA NATH BHADRA, B.L., intends to enroll himself as an Advocate of the Calcutta High Court.

(1559—4—1547)

MR. PRAFULLA KUMAR RAY intends to be enrolled as an Advocate of the Calcutta High Court.

(1583—4—1597)

MR. SUKUMAR SEN GUPTA, B.L., intends to be enrolled as an Advocate of the Calcutta High Court.

(1587—4—1610)

MR. CHANDRA SEKHAR BHAWMICK, B.L., intends to be enrolled as an Advocate of the Calcutta High Court.

(1588—4—1609)

MR. UPENDRA NATH PAL, B.L., intends to be enrolled as an Advocate of the Calcutta High Court.

(1631—4—1611)

MR. ABINASH CHANDRA ADHIKARY, M.A., B.L., intends to be enrolled as an Advocate, High Court.

(1695—4 1724)

RAJENDRA NATH BHATTACHARYYA, M.A., B.L., intends to be enrolled as an Advocate of the High Court.

(1542—4—1548)

RAJENDRA NARAYAN ROY, M.A., B.L., intends to be enrolled as an Advocate of the Calcutta High Court.

(1568—4- 1612)

WANTED a Shorthand-typist for the office of the District and Sessions Judge of Faridpur on a pay of Rs. 70—4—130—5—150 a month. Applications should reach the undersigned within 31st August 1931. No one need apply who is not a graduate and who has not had past experience.

A. N. SEN, District Judge.

Faridpur, the 12th August 1931.

WANTED a Professor of English for the Hooghly College, in the Bengal Educational Service, with effect from 16th November 1931 or as soon after that date as possible.

2. Candidates for direct appointment should be British subjects and must not be over 45 years of age. They must possess a first class degree of M. A. of an Indian University or a good Honours degree of a European University with satisfactory evidence of teaching experience for at least three years; capacity for original research will ordinarily be required to be proved except in cases where teaching ability of a special nature is possessed. In the case of candidates for appointment by promotion from the Subordinate Educational Service, a first or second class degree of M. A. of an Indian University or an Honours degree (or corresponding qualification) of a European University, with a satisfactory record of teaching is required.

3. Applications supported by documentary evidence of the qualifications possessed should reach the Principal, Hooghly College, on or before the 31st August 1931.

WANTED a District Engineer for the District Board of Hooghly on Rs. 300—20/2—400 and second class travelling allowance according to the Fundamental Rules. Applicants should possess the necessary qualifications as required under the rules framed under the Bengal Local Self-Government Act. The selected candidate will be on probation for one year and will have to join on 1st of October 1931. No travelling allowance will be paid to join the appointment. Applications stating age, qualifications and past experience with true copies of testimonials and certificates should be sent in sealed and registered covers and superscribed as "Application for appointment of District Engineer" to the undersigned by the 25th August 1931. Canvassing will be considered a disqualification. The applicant should state if he bears any relationship to any of the members of the Board.

Candidates, if required, shall have to come for interview at their own expense.

TARAKNATH MUKERJEA, Chairman,
District Board, Hooghly.

Chinsura, the 29th July 1931. (1597—3)

THE Bengal and Madras Service Family Pension Fund which is provisionally managed and assisted by Government has for its object the provision of monthly pensions for the maintenance of the widows and children of subscribers and is open, with certain exceptions, to all active and pensioned members of the Uncovenanted service of Government (except those serving under the Government of Bombay), and to Local Fund servants earning pensions from Government. Some of the special features of the fund are—(1) that widowed daughters incapable of remarriage or children labouring under such mental or bodily infirmities as incapacitate them from earning their livelihood or preclude the possibility of marriage (in case of a daughter) are admitted to its benefits; and (2) that subscribers to the Widows' and Daughters' branches are entitled to a refund of 30 per cent. of the premia paid, should the nominee predecease them after five years of admission. The second quinquennial valuation of the Fund has been completed by the actuary to the Government of India, and his report discloses very favourable results. For forms of application and rules of the Fund apply to the Accountant-General, Bengal, Imperial Secretariat Buildings, Calcutta.

Sale Notice.

(Under section 88, Sea Customs Act, Act VIII of 1878.)

TO be sold by public auction in the Custom House on Friday, the 28th August 1931, at 2 p.m.—

(1) 36 bottles remnants of liquors.
(2) 16 bottles remnants of liquors.
(3) 108 bottles remnants of oils and medicines.
(4) One lot of empty cigarette tins.
(5) One bag empty bottles.
(6) One case popticol samples (medicines free from spirits). One tailoring establishment account.
(7) 5 cases M. C. C. S. Alcoholic Compound, ex-ss. "City of Baroda".
(8) Seven *thans* khaki flannel, two pairs tailor's shears, one square, penknife, soap, tape measures, wooden rules, marking ink, metal pant buttons and cotton thread.

Inspection of the above articles may be obtained on applying to the Inspector in charge of the Custom House.

M. SLADE, Collector of Customs (offg.).

Calcutta Custom House, the 12th August 1931.

(1711—2)

Notice to creditors under section 10 (A) of Act IX (B. C.) of 1879.

WHEREAS under sections 7 and 35 of the Court of Wards Act IX (B.C.) of 1879 as amended up to date, the Court of Wards has assumed charge of the property known as "A—unsettled" fund of Nawab K. Habibullah of Dacca, whose ancestral estate is already under the management of the Court of Wards, under section 13A of Act IX (B.C.) of 1879, and who has been declared a disqualified proprietor for the purpose of managing his said property known as "A—unsettled" fund on his own application under clause (c) of section 6 of the Bengal Court of Wards Act IX (B.C.) of 1879 as amended by the Bengal Decentralization Act, 1915 (Bengal Act V of 1915), by its order No. 378 W.-T., dated the 7th April 1931.

Notice is hereby given under section 10(A) of the said Act that all creditors having claims against the said estate or his immovable property, are hereby required to submit the same in writing to the undersigned at his office at Dacca within six months from the date of the publication of this notice.

Creditors are also hereby warned that claims not submitted as required by this notice, are liable to be deemed to have been duly discharged.

A. CASSELLS, Commissioner,
Dacca Division (offg.).

Dacca, the 10th August 1931. (1724—3)

Currency Notes.

PORTIONS of the following Currency Notes of the Calcutta Circle of issue are stated to have been destroyed and payment of their value has been claimed by the persons whose names are shown against the numbers.

Any other person claiming a right to them is warned to communicate at once with the undersigned.

Registered No.	Note No.	Value. Rs.	Name and address of the claimant.
W.D. 10 of 31-32.	S-44,608901	100	Murlimull Radhakishan, Sudder Bazar, Ambala.
	S-52,182632	100	
	S-52,217770	100	
	S-52,308738	100	
	S-52,310080	100	
	S-52,308739	100	

B. C. DUTT, Currency Officer.

Currency Office, Calcutta, the 7th August 1931.

Lost.

THE Government Promissory Notes Nos. 223555 and 314538 of the 3½ per cent. loans of 1854-55 and 1900-01, respectively, for Rs. 1,000 each, originally standing in the name of Srecmati Saralabala Devi, the proprietress, by whom they were never endorsed to any other person, having been lost, notice is hereby given that payment of the above notes and the interest thereupon have been stopped at the Public Debt Office, Imperial Bank of India, Calcutta, and that application is about to be made for the issue of duplicates in favour of the proprietress. The public are cautioned against purchasing or otherwise dealing with the abovementioned securities.

Name of the Proprietress.—Saralabala Devi.

Address.—C-o Sarat Chandra Mookherji, pleader, 63, Srigopal Mullick Lane, Bowbazar, Calcutta.

(1671—3—1738)

Imperial Library.

(Secretariat Buildings, 6, Esplanade East, Calcutta.)
Open on—

Weekdays and Saturdays from 10 A.M. to 7 P.M.
Sundays and Gazetted holidays from 2 P.M. to 5 P.M.

THE Imperial Library is also a Lending Library. It is free to all except children. There is no subscription to pay.

K. M. ASADULLAH, Librarian.

Descriptive Catalogue of Sanskrit Manuscripts.

PARTS I, II and III of a Descriptive Catalogue of the Sanskrit Manuscripts in the Library of the Calcutta Sanskrit College, prepared by Pandit Hrishikesh Sastri and Babu Siva Chandra Gui, M.A., B.L., of that College, are offered to the public for sale. The Catalogue having to be completed in 23 parts the price of each part is 12 annas a copy exclusive of postage. Copies can be obtained from the Principal of the Sanskrit College, Calcutta.

CINCHONA FACTORY PRODUCTS.

By order of the Government of Bengal Cinchona Factory Products as manufactured and packed at the Cinchona Factory, Mungpoo, Darjeeling district, will be sold and distributed by the Superintendent of the **Presidency Jail,** *in original packages* as received from the Mungpoo Factory, at the rates herein noted **from the 1st May 1926 :—**

Quinine Sulphate.

For 60 lbs. and upwards at a time	..	Rs. 18 per lb.
For 6 lbs. and over but less than 60 lbs. at a time	.. .. ..	„ 19 „
For any quantity less than 6 lbs.	..	„ 20 „

Quinine Hydrochloride.

For 60 lbs. and upwards at a time	..	Rs. 23 per lb.
For 6 lbs. and over but less than 60 lbs. at a time	.. .. ..	„ 24 „
For any quantity less than 6 lbs.	..	„ 25 „

Quinine Di-Hydrochloride.

For 60 lbs. and upwards at a time	..	Rs. 25 per lb.
For 6 lbs. and over but less than 60 lbs. at a time	.. .. ..	„ 26 „
For any quantity less than 6 lbs.	..	„ 27 „

Quinidine Sulphate.

For 60 lbs. and upwards at a time	..	Rs. 20 per lb.
For 6 lbs. and over but less than 60 lbs. at a time	.. .. ..	„ 21 „
For any quantity less than 6 lbs.	..	„ 22 „

Cinchonidine Sulphate.

For 60 lbs. and upwards at a time	..	Rs. 25 per lb.
For 6 lbs. and over but less than 60 lbs. at a time	.. .. ..	„ 26 „
For any quantity less than 6 lbs.	..	„ 27 „

Cinchonine Sulphate.

For 60 lbs. and upwards at a time	..	Rs. 12 per lb.
For 6 lbs. and over but less than 60 lbs. at a time	.. .. ..	„ 13 „
For any quantity less than 6 lbs.	..	„ 14 „

Cinchona Febrifuge (Powder).

For 60 lbs. and upwards at a time	..	Rs. 9 per lb.
For 6 lbs. and over but less than 60 lbs. at a time	.. .. ..	„ 9 „
For any quantity less than 6 lbs.	..	„ 10 „

Cinchona Febrifuge (Tablets).

For 60 lbs. and upwards at a time	..	Rs. 10 per lb.
For 6 lbs. and over but less than 60 lbs. at a time	.. .. ..	„ 10 „
For any quantity less than 6 lbs.	..	„ 11 „

Quinoidine (Tablets).

For 60 lbs. and upwards at a time	..	Rs. 5 per lb.
For 6 lbs. and over but less than 60 lbs. at a time	.. .. ..	„ 5 „
For any quantity less than 6 lbs.	..	„ 6 „

Quinoidine (in Mass).

For 60 lbs. and upwards at a time	..	Rs. 4 per lb
For 6 lbs. and over but less than 60 lbs. at a time	.. .. ..	„ 4 „
For any quantity less than 6 lbs.	..	„ 5 „

Cinchona Bark (in 50 pound original bags).

Per bag .. .. .. Rs 25.

Quinine Tablets — per box of 200 tablets each. Rs. 2-8 (Bengal) Rs. 3 (outside Bengal).

Rs. 15-8-0 per lb.

Transit charges extra in every case.

Quinine Sulphate is for sale to Government Institutions and Missionaries only. It is not for sale to Private Firms or the General Public.

Cinchona Febrifuge in Powder and Tablet form (when in stock) is for sale to Government Institutions, Missionaries and the General Public.

Quinine Sulphate will be supplied to Hospitals and Dispensaries of this Presidency only at the wholesale rate of Rs. 18 per lb., irrespective of quantities. For all other purchasers the rates given above will apply.

Five and ten boxes of Quinine Tablets are sold to the public at the concession rates which will be intimated on application.

Provinces other than Bengal, Bihar and Orissa and Assam will get their supplies of Sulph. Quinine from the Director, Botanical Survey of India, Sibpur, Howrah.

Local sale at the jail gate from 10 to 12 noon.

The system of payment is by—*Cash in advance*—by "*Treasury Challans,*" which should accompany the order or indent.

In cases where this is not possible, payment should be made by "*Remittance Transfer Receipts*" or crossed "*Cheques.*"

Indents unaccompanied by cash in advance will be sent Value Payable Post. Credit sale is not allowed except under special circumstances.

In the case of *Government officers* payments will be recovered by *Book Transfer, i.e., Countersigned Invoices*, in the event of *Cash* not accompanying the indent by "*Treasury Challans,*" *Remittance Transfer Receipt* or *Cheque.*

2. Price and postage must accompany the price of the drug (when the drug is required by post).

The name of the Railway and Steamer Station or Post Office must be written distinctly when the parcels are required by Rail, Steamer or by Post. Railway parcels are sent by passenger train only.

A scale of postage is given below.

	1 oz.	2 oz.	4 ozs.	½ lb.	¾ lb.	1 lb.
	As.	As.	As.	As.	As.	Rs. A.
Quinine Sulph. ..	..	..	6	6	10	0 10
Cinchona Feb. ..	..	..	6	6	10	0 10
Cinchona Feb. Tablets	..	..	6	6	10	0 10
Quinoidine Tablets ..	..	..	..	..	..	1 2
Quinine Hydrochlor. ..	4	4	6	6	..	0 10
Quinine Di-hydrochlor.	4	4	6	6	..	0 10
Quinine Tablets ..	..	..	6	6	10	0 10

	1¼ lb.	2 lb.	3 lb.	4 lb.	5 lb.	6 lb.
	Rs. A.	Rs. A.	Rs. A	Rs. A.	Rs. A.	Rs. A.
Quinine Sulph. ..	0 14	1 2	1 6	1 14	2 6	2 14
Cinchona Feb. ..	0 14	0 14	1 6	1 10	1 14	2 6
Cinchona Feb. Tablets	1 2	1 2	1 10	1 14	2 6	2 14
Quinoidine Tablets ..	..	2 2	3 2	..	..	..
Quinine Hydrochlor. ..	1 0	0 14	1 6	1 10	..	..
Quinine Di-hydrochlor.	1 0	1 2	1 12	2 4	..	..
Quinine Tablets ..	0 14	0 14	1 6	1 10	1 14	2 2

Two different drugs are not packed in the same parcel and postage must be paid separately for each kind.

N.B.—Postage stamps are not accepted as revenue.

Government reserve the right to alter the price without notice.

Registered No. C207 *No. 34 of 1931*

The Calcutta Gazette

THURSDAY, AUGUST 20, 1931.

CONTENTS:

	PAGE.
First Forecast of the Sugarcane Crop of Bengal, 1931-32	1055—1056
Vital Statistics for the towns of Bengal for the week ending 8th August 1931 ..	1057
Monthly Weather and Crop Report of Bengal for July 1931	1058
Weather and Crop Report for the week ending 12th August 1931	1059—1062
Statement showing the daily gauge-readings of certain rivers for the week ending 6th August 1931	1063—1069
Statement under the Cotton Ginning and Pressing Factories Act, 1925 ..	1070
Price-list (retail) of staple food-crops in the local areas of Bengal from January to March 1931	1071—1074
Area leased for irrigation up to end of May 1931	1075
Statements of weekly gauge readings of certain rivers in Bengal	1076—1077
Calcutta Improvement Trust Notice ...	1077

Supplement.

Official Papers.

DEPARTMENT OF AGRICULTURE, BENGAL.

Dacca, the 8th August 1931.

First Forecast of the Sugarcane Crop of Bengal, 1931-32.

(NOTE.—On an average of the five years ending 1929-30, the area under sugarcane in Bengal has represented some 7·1 per cent. of the total area under sugarcane in British India.)

Character of the season.—Good rainfall in February was sufficient for the preparatory tillage and for planting of the crop which generally commenced in the normal time. In March and April defective rainfall, however, proved somewhat unfavourable to the germination and growth especially in some West Bengal districts. Subsequent conditions are reported to have been generally favourable except in parts of Mymensingh where heavy rain has affected the growth. The outlook at present is reported to be favourable, on the whole.

Area planted.—The total area planted with sugarcane for the Province is reported to be 200,300 acres this year as against 195,500 and 198,500 acres reported in the corresponding and final forecasts of last year, but I consider that, in view of the diminished area under jute, the area of sugarcane cannot be less than 275,000 acres.

R. S. FINLOW,
Director of Agriculture, Bengal.

First Forecast of the Sugarcane Crop of Bengal, 1931-32.

District	Estimated normal area under sugarcane.	Estimated area under sugarcane.		Date by which the sowing of the crop generally commenced this year, and whether that date was early, normal or late.	Remarks by District Officers.
		Last year.	This year.		
1	2	3	4	5	6
	Acres.	Acres.	Acres.		
24-Parganas ..	3,300	2,000	2,300	February and March. Normal.	The weather has been favourable but more rain is needed.
Nadia ..	10,000	6,100	6,600	Middle of February. Normal.	The decrease in area as compared with the normal is due to unfavourable weather at planting time. The weather and its effects on the growth have been fair.
Murshidabad ..	4,300	2,300	2,600	End of March. Normal.	A little increase in area compared with last year is due to better weather condition at planting time this year. The weather has been favourable.
Jessore ..	2,500	2,400	2,700	March and April. Normal.	The increase in area was due to favourable weather at sowing time. The weather has been favourable.
Khulna ..	500	400	400	February. Normal ..	A little decrease is due to want of rain at planting time. The weather has been fair.
Burdwan ..	11,600*	13,700	6,300	Middle of April. Normal	The decrease in area is due to unfavourable weather at sowing time. The weather has been fair.
Birbhum ..	9,100	9,100	8,700	Last part of April. Normal.	The decrease in area is due to want of rain at planting time. The weather has been fair.
Bankura ..	3,100	3,000	2,800	End of April. Normal	The weather was unfavourable at planting time but has since improved. The growth of the crop has been fair.
Midnapore ..	6,600	4,700	5,000	March. Normal ..	There was want of rain at planting time. Subsequent weather has been favourable.
Hooghly ..	3,300	2,700	2,200	March. Normal ..	The decrease in area was due to unfavourable weather at planting time. Subsequent conditions have been favourable.
Howrah ..	3,300	2,400	2,400	Early May. Normal	The weather has been favourable.
Rajshahi ..	7,500	6,300	6,200	December. ..	The increase in area is due to reduction in jute cultivation. The weather has been favourable.
Dinajpur ..	29,500	31,200	33,300	By the middle of March. Normal.	The weather has been favourable. The increase in area is due to reduction in jute cultivation.
Jalpaiguri ..	5,000*	5,000	5,000	Middle of February. Normal.	The weather has been favourable.
Darjeeling ..	300	300	300	February. Normal ..	The weather has been fair.
Rangpur ..	21,900	21,000	22,000	Middle of February. Normal.	The weather has been favourable.
Bogra ..	4,000	4,000	5,000	January to March. Normal.	The increase in area is due to reduction in jute cultivation. The weather has been favourable.
Pabna ..	4,000*	3,900	4,000	Beginning of February. Normal.	The weather has been favourable and the growth of the crop good.
Malda ..	300	400	400	January to April. Normal.	The weather has not been favourable.
Dacca ..	19,000	18,000	18,300	Highland—November. Normal. Lowland—February and March. Normal.	The weather has been favourable.
Mymensingh ..	16,400	16,300	16,300	April ..	The weather was favourable at planting time but subsequently heavy rain has affected the growth.
Faridpur ..	6,700	6,700	7,100	Middle of January. Normal.	The weather has been favourable. The increase in area is due to reduction in jute cultivation.
Bakarganj ..	18,200	27,000	20,000	January. Normal ..	The increase in area is due to favourable weather at planting time and to reduction in jute cultivation. The growth of the crop is fair.
Chittagong ..	6,000	5,900	5,900	February and March ..	The weather has been favourable.
Tippera ..	3,600	900	900	January to first part of April. Normal.	The weather has been favourable owing to occasional rain at sowing time and up till now. The decrease in area as compared with the normal is due to the fact that the cultivators do not find the cultivation profitable.
Noakhali ..	800	1,700	1,500	November. Normal ..	The weather has been fair.
Chittagong Hill Tracts.	1,100	1,100	1,100	Second week of March. Normal.	The weather has been favourable.
Total Bengal	202,400	198,500	200,300		

* Revised.

Vital statistics of towns with a population of 50,000 and over of the Bengal Presidency for the week ending Saturday, the 8th August 1931.

District.	No.	Towns.	Population under registration according to Census of 1921.			Births registered.		Deaths registered.																						
			Male.	Female.	Total.	Number registered (exclusive of still-births).	Still-births registered.	Cholera.	Small-pox.	Plague.	Malaria.	Enteric fever.	Measles.	Relapsing fever.	Kala-azar.	Other fevers.	Dysentery.	Diarrhœa.	Influenza.	Pneumonia.	Phthisis.	Other respiratory diseases.	Injuries including suicide.	Deaths from child-birth.	Other causes.	Total of all causes. Male.	Total of all causes. Female.	Total of all causes. Total.	Total of corresponding week of the previous year. Male.	Total of corresponding week of the previous year. Female.	Total of corresponding week of the previous year. Total.
Calcutta ..	1	Calcutta ..	724,248	353,016	1,077,264	402	34	17	4	..	15	20	..	..	3	38	33	24	12	41	6	64	12	1	285	312	253	565	285	242	527
Burdwan ..	2	Asansol Mining Settlement.	176,814	152,539	329,353	149	..	20	1	..	3	..	..	..	..	29	2	1	..	14	..	4	4	1	48	77	50	127	70	57	127
Howrah ..	3	Howrah ..	128,472	66,829	195,301	90	12	1	3	..	..	1	..	..	..	1	11	6	..	12	8	11	2	1	30	45	42	87	54	39	93
Dacca ..	4	Dacca ..	67,333	52,117	119,450	55	1	1	..	..	..	1	..	..	..	1	8	1	..	8	1	7	2	2	22	33	21	54	22	18	40
24-Parganas	5	Bhatpara ..	45,723	19,886	65,609	16	..	6	..	..	1	2	..	..	..	9	1	3	..	1	..	..	..	..	2	19	6	25	1	2	3
	6	Titagarh ..	36,533	15,918	52,451	12	2	..	..	..	..	..	..	..	1	7	..	2	..	1	..	..	..	..	..	6	5	11	4	2	6

R. B. KHAMBATA, M.R.C.S. (Eng.), L.R.C.P. (Lond.), D.P.H. (Camb.), *Director of Public Health, Bengal (offg.).*

CALCUTTA, *the 14th August 1931.*

DEPARTMENT OF AGRICULTURE, BENGAL.

Dacca, the 15th August 1931.

Monthly Weather and Crop Report of Bengal for July 1931.

I. **Character of the season.**—During the month under review, the rainfall was above the normal in all the districts of the Province, more especially in Rangpur, Bakarganj, Chittagong and the Cooch Behar State. The usual rainfall statement is appended.

II. **Progress of agricultural operations.**—Transplantation of winter paddy seedlings and harvesting of autumn paddy and jute were progressing except in parts of North Bengal where heavy rain was retarding the operations.

III. **State of standing crops.**—The condition of standing crops was reported to be satisfactory except in the waterlogged tracts of East and North Bengal where their growth was affected.

IV. **Prospects and probable outturn.**—The outturn of summer til is estimated at about 70 per cent. of the normal. The prospects of standing crops were not promising in parts of East and North Bengal owing to excessive rain.

V. **Damage to standing crops.**—Damage to jute and autumn paddy by heavy rain and flood is reported from East and North Bengal districts. Damage by hailstorm is also reported from parts of Dacca and Rangpur.

VI. **Condition of agricultural stock.**—The condition of live-stock was, on the whole, fair. Stray cases of cattle-disease, however, were reported from ten districts of the Province and from the States of Cooch Behar and Tripura.

VII. **Failure of pasturage and fodder.**—The supply of fodder was reported to be sufficient throughout the Presidency.

VIII. **Prices of food-grains.**—During the second fortnight of the month, the retail prices of common rice of the cheapest quality rose in six districts, fell in seven and remained stationary in the rest of the Presidency. The prices ranged from 7¼ seers per rupee in the 24-Parganas to 13¾ seers per rupee in Midnapore.

IX. **Condition of agricultural population.**—The condition of agricultural population is not satisfactory owing to fall in the prices of jute and other staples. Distress continues to prevail in parts of Nadia, Murshidabad, Dinajpur, Rangpur, Bogra and Pabna where distribution of agricultural loans and test relief works are being continued. Damage done by flood is being investigated in collaboration with district officials and remedial measures are being applied wherever necessary.

R. S. FINLOW,
Director of Agriculture, Bengal.

Statement showing the normal and actual rainfall in each district during July 1931.

Division.	District.	Normal district rainfall for the month of July.	Actual district rainfall for the month of July 1931.	Variation from the normal.	Division.	District.	Normal district rainfall for the month of July.	Actual district rainfall for the month of July 1931.	Variation from the normal.
		Inches.	Inches.	Inches.			Inches.	Inches.	Inches.
Presidency ..	24-Parganas ..	13·06	17·10	+4·04	Rajshahi—*concld.*	Rangpur ..	15·25	24·32	+9·07
	Nadia ..	9·97	10 81	+0·84		Bogra ..	12 07	16·83	+4·76
	Murshidabad ..	10·81	12·76	+1·95		Pabna ..	10 57	12·71	+2·14
	Jessore ..	11·08	16·04	+4·96		Malda ..	12 10	16·09	+3·99
	Khulna ..	14·77	15·70	+0·93					
Burdwan ..	Burdwan ..	11·00	14·64	+3·64	Dacca ..	Dacca ..	13 27	13·75	+0·48
	Birbhum ..	12·43	13·15	+0·72		Mymensingh ..	16·70	20·74	+4·04
	Bankura ..	11·47	14·72	+3·25		Faridpur ..	12·85	13·54	+0 69
	Midnapore ..	11·54	12·97	+1·43		Bakarganj ..	18·41	25·27	+6·86
	Hooghly ..	11·84	13·24	+1·40	Chittagong ..	Chittagong ..	26·42	37·80	+11·38
	Howrah ..	12·59	14·94	+2·35		Tippera ..	13 75	18·37	+4·62
Rajshahi ..	Rajshahi ..	11·62	12·03	+0·41		Noakhali ..	23·55	27·18	+3·63
	Dinajpur ..	16·21	19·57	+3·36		Chittagong Hill Tracts.	22·18	24·99	+2·81
	Jalpaiguri ..	34·81	38·21	+3·40	Cooch Behar ..	.. ..	25·46	41·53	+16·07
	Darjeeling ..	31·45	39·50	+8·05	Tripura State ..	.. ..	12·10	14·97	+2·87

DISTRICT REPORTS ON WEATHER AND CROPS.

For the week ending on the 12th August 1931.

Summary.—During the week the rainfall was generally light to moderate except in parts of North and East Bengal, where the fall was a little heavy. Transplantation of winter paddy seedlings is progressing except in parts of West Bengal where the progress of the operation is slow due to want of sufficient rain. Harvesting of jute and autumn paddy continues in East and North Bengal but in West Bengal the operation has commenced in places. Some damage to standing crops continues to be reported from the water-logged tracts of North and East Bengal. Distress continues in parts of Nadia and Murshidabad and is apprehended in Rajshahi. The number of persons attending the test relief works in the different centres of these two districts was 647 and 3,623 respectively. In Dinajpur, Pabna, Rangpur and Bogra relief works closed for rains. The number of persons gratuitously relieved was 342 in Murshidabad and 2,109 in Rangpur. Gratuitous relief is also being given in Nadia. The average price of common rice for the province has risen by about 1·41 per cent. as compared with that of the previous week.

Serial No.	District and subdivision.	Rainfall.	Price of common rice, in seers, per rupee.		Character of the weather, condition of crops, etc.
			This week.	Previous week.	
1	2	3	4	5	6
		Inches.			
1	24-Parganas ..	2·70	9½	9½	Weather seasonable. Fodder and water are sufficient. Cattle-disease is reported from Basirhat subdivision. Condition of jute plants is healthy. Damage reported from some parts of Barrackpore subdivision. Height of jute plants is 8 feet in Barrackpore, 10½ feet in Baraset, 7½ feet in Basirhat and 6½ feet in Diamond Harbour subdivisions. Steeping water is ample except in Barrackpore. No record of river level. Harvesting has commenced in some parts of Sadar, Baraset, Barrackpore and Basirhat subdivisions.
	Diamond Harbour.	8·21	10½	10½	
	Barrackpore ..	3·03	8½	8½	
	Baraset ..	1·09	9	9	
	Basirhat ..	0·79	9	9	
2	Nadia ..	4·46	9½	9½	Weather seasonable. 647 persons attended test works during the week ending on the 8th August. Gratuitous relief continues in Kushtia subdivision. Condition of jute plants is fair. No damage. Steeping water is sufficient. Height of river is the same as last year. Harvesting of jute has not yet commenced.
	Kushtia ..	4·41	10	10	
	Meherpur ..	3·60	8 13/16	8 13/16	
	Chuadanga ..	1·81	10	10	
	Ranaghat ..	5·71	10	10	
3	Murshidabad ..	0·98	10½	11	Weather seasonable. Prospects of crops are fair. Fodder and water are sufficient. Cattle-disease is reported from thanas Suti and Raghunathganj in Jangipur subdivision. 3,623 persons attended test works in Jellingi police-station during the week ending on the 8th August. 36 maunds and 4 chittacks of rice at a cost of Rs. 130-15-2 were distributed among 59 men, 263 women and 20 children and 19 maunds of paddy worth Rs. 40-15-6 were given to 19 women for paddy husking. Condition of jute is healthy. No damage. Steeping water is sufficient. Height of jute plant is 5 to 8 feet. Height of rivers is normal. Rainfall moderate. Harvesting of jute has not yet commenced.
	Lalbagh ..	1·79	10½	10½	
	Jangipur ..	4·58	10½	10½	
	Kandi ..	6·28	12	12	
4	Jessore ..	2·00	9	9	Weather seasonable. Prospects of standing crops are good. Jute plants are healthy. No damage. Steeping water is sufficient. Height of rivers is lower than last year. Harvesting of jute has not commenced. Fodder and water are sufficient. Cattle-disease reported from some places.
	Jhenidah ..	2·98	10	10	
	Magura ..	3·92	10	10	
	Narail ..	1·06	9½	9½	
	Bongaon ..	4·12	9½	9½	
5	Khulna ..	2·99	11	10½	Weather seasonable; its effects on crops are fair. Fodder and water are sufficient. Export and import of rice continue slowly. Condition of jute is good. No damage. Steeping water is sufficient. Height of jute plants is 5½ feet. River level 0·08 feet higher. Rainfall is moderate. Harvesting continues.
	Satkhira ..	(n)	(n)	9⅞	
	Bagerhat ..	4·11	8½	8½	

(n) Not reported.

Serial No.	District and subdivision.	Rainfall.	Price of common rice, in seers, per rupee.		Character of the weather, condition of crops, etc.
			This week.	Previous week.	
1	2	3	4	5	6
		Inches.			
6	Burdwan ..	5·12	10	10	Weather seasonable. Fodder and water are sufficient. Condition of jute plants is healthy. No damage. Steeping water is ample. Height of jute plant is 4 feet. River level is normal. Rainfall is normal. Harvesting of jute has not commenced.
	Asansol ..	3·09	9	9	
	Katwa ..	4·51	11	11	
	Kalna ..	4·27	11	11	
7	Birbhum ..	6·90	12½	13	Weather hot and cloudy. Fodder and water are sufficient.
	Rampurhat ..	3·13	11½	11½	
8	Bankura ..	2·83	11	11	Weather hot and cloudy. Prospects of standing crops are good. Fodder and water are sufficient.
	Vishnupur ..	5·43	12	11 7/16	
9	Midnapore ..	1·18	13⅜	13½	Weather seasonable. Fodder and water are sufficient. Condition of jute is unsatisfactory.
	Contai ..	0·75	13	12	
	Tamluk ..	1·75	10½	10½	
	Ghatal ..	1·89	13½	12½	
	Jhargram ..	4·08	11¾	11¾	
10	Hooghly ..	5·45	9	9	Weather seasonable. More rain is needed at Arambagh. Fodder is sufficient. Growth of jute is satisfactory. No damage. Harvesting has not commenced. Steeping water is ample. Height of river is the same as last year.
	Serampore ..	2·94	9¾	9¾	
	Arambagh ..	2·02	12½	12½	
11	Howrah ..	2·98	8	8	Weather moderate; its effects are not beneficial to crops. No import or export. Fodder and water are sufficient. Jute plant is healthy. No damage. Steeping water is ample. Height of jute plants is 5 to 6 feet. Height of river is lower.
	Uluberia ..	1·17	10¾	10¾	
12	Rajshahi (Rampur-Boalia).	2·69	10½	10½	Weather seasonable. Jute crop is thriving. *Aus* paddy is damaged in Gurudaspur, Baraigram and Singra thanas by floods. Ten annas outturn expected. *Aman* crop of Sundarpur *elaka* destroyed. Distress apprehended in a few villages of Nator. Jute crop is thriving. Six annas crop has been harvested in Naogaon subdivision. Steeping water is sufficient. Harvesting of jute is going on.
	Naogaon ..	3·71	10¼	10¾	
	Nator ..	3·01	9	9¾	
13	Dinajpur ..	1·75	10	10	
	Thakurgaon ..	2·45	9	9	Weather seasonable; its effects on agricultural operations are favourable. Prospects of standing crops are fair. Fodder and water are sufficient. Cattle-disease is reported from Balurghat police-station. Condition of jute plants is not so healthy. Growth is fair. No damage. Rainfall and steeping water are sufficient. Height of plants is 3½ to 4½ cubits. River level is higher. Harvesting has commenced.
	Balurghat ..	2·36	12	13	
14	Jalpaiguri ..	5·25	6	6½	Prospects of standing crops are now favourable. Condition of jute is not hopeful. No damage. Steeping water is ample. Height of jute plants is 5 feet 11 inches to 7 feet 6 inches. Rainfall is more than enough. Harvesting has commenced on small scale.
	Alipur ..	3·64	6½	7	
15	Darjeeling ..	5·44	7	7	Marua and paddy are growing. Potatoes and maize are being harvested. Fodder and water are sufficient. Cattle-disease exists at places. Condition of jute is satisfactory. No damage. Steeping water is ample. Height of jute plants is about 7 feet. Rainfall is excessive. Harvesting of jute not begun.
	Kurseong ..	10·35	7	7	
	Siliguri ..	9·81	8½	8½	
	Kalimpong ..	4·08	7	7	

Serial No.	District and subdivision.	Rainfall.	Price of common rice, in seers, per rupee.		Character of the weather, condition of crops, etc.
			This week.	Previous week.	
1	2	3	4	5	6
		Inches.			
16	Rangpur ..	5·53	9	9	Prospects of crops are fair but bad in the low lands. Jute plants are fairly healthy. Flood water damaged jute to some extent. Harvesting is going on. Steeping water is sufficient. River level is higher than last year. Rainfall is excessive. Scarcity of fodder prevails in Kurigram and Gaibandha subdivisions but water sufficient. Cattle-disease reported from Nageswari thana. None attended the test relief works. 2,109 persons received gratuitous relief in Gaibandha subdivision.
	Nilphamari ..	8·60	10	11	
	Kurigram ..	2·69	9⅞	10	
	Gaibandha ..	4·63	9	9	
17	Bogra ..	8·92	10½	10½	Jute and *aus* paddy are being harvested. Flood water on the eastern side is subsiding. There was also a second rise. Attempts are being made to procure popular kinds of paddy seeds by the Agricultural Department. Rainfall normal. Gratuitous relief and further agricultural loans in flooded area are needed. Sanction for Rs. 20,000 only as agricultural loans received. Test works and gratuitous relief stopped. Harvesting of jute and *aus* paddy continues on the western side. Relief works stopped for rains.
18	Pabna ..	3·03	9½	9½	Export and import are normal. Prices rising. Condition of cattle is well. Fodder is wanting owing to flood. Growth of jute is not satisfactory. Four annas damage done by flood. Steeping water is abundant. Height of jute plants is five and a half feet on an average. Rainfall is not too excessive. *Padma* level is 1 foot lower than last year. Eight annas crop is harvested.
	Sirajganj ..	(*a*)	(*a*)	10	
19	Malda ..	1·96	10½	11	Weather seasonable. Standing crops have been damaged by flood in places. Transplantation of paddy continues. Fodder and water are sufficient. Condition of jute plant is healthy. Damage to jute by worms is reported from Nachole thana. Steeping water is ample. Height of rivers is higher than last year. Harvesting has not commenced.
20	Cooch Behar ..	3·66	9⅝	9⅝	Weather seasonable. Transplantation of *haimanti* seedlings, harvesting of *bitri* paddy and cutting, steeping and washing of jute are continuing. No damage to jute. Steeping water is sufficient. About two annas crop is harvested. Fodder is sufficient.
21	Dacca ..	2·81	9½	9½	Rainfall at North Sadar (Kapasia) 2·89. Weather seasonable. Condition of standing crops is not satisfactory. The jute crop has been damaged to a considerable extent by a sudden rise of water. Steeping water is sufficient. Height of jute is between 3½ and 6½ feet. Rainfall is normal. River level is about two feet higher than last year. Three annas crop is harvested. Fodder is insufficient. Cattle-disease is apprehended in the flooded areas.
	Manikganj ..	2·30	7¾	8½	
	Narayanganj	4·95	10	10	
	Munshiganj ..	3·52	11	11	
22	Mymensingh ..	1·79	9	9	Weather hot and cloudy. Prospects of standing crops are not good. Condition of jute is not satisfactory. The crop is damaged to the extent of 20 per cent. Steeping water is sufficient. Fodder is not available in some places. Height of jute plants is 4 to 6 cubits. River level is higher than last year by 30 inches. Rainfall is normal. Seven annas crop is harvested.
	Jamalpur ..	4·65	9½	9½	
	Tangail ..	2·65	9	9	
	Netrakona ..	5·38	10	10	
	Kishorganj ..	2·52	10	10	

(*a*) Not reported.

Serial No.	District and subdivision.	Rainfall.	Price of common rice, in seers, per rupee.		Character of the weather, condition of crops, etc.
			This week.	Previous week.	
1	2	3	4	5	6
		Inches.			
23	Faridpur ..	3·79	9½	9½	Weather cloudy and not satisfactory for flood Prospects of standing crops are not good. No large import or export. Fodder is not sufficient. Growth of jute is not satisfactory for sudden flood, which damaged the crop to some extent. Height of jute plants is 5 to 6 feet. River is overflooded. Rainfall is normal. Eight annas crop is harvested.
	Goalundo (Rajbari).	1·03	9	9	
	Madaripur ..	2·62	10½	11	
	Gopalganj (*a*)	(*n*)	(*n*)	8½	
24	Bakarganj (Barisal).	6·29	9½	9½	Weather seasonable. Fodder and water are sufficient. Condition of jute is fair. No damage. Steeping water is ample Height of plants is from 4½ to 7½ feet. River level is rising. Rainfall is a little above the normal About four annas crop is harvested.
	Pirojpur ..	6·13	10	10½	
	Patuakhali ..	9·98	10	10	
	Dakshin Shahazpur (Bhola).	6·42	9	9½	
25	Chittagong ..	8·84	10 11*	10 11*	Weather seasonable. Prospects of standing crops fair. Transplantation of *aman* crop and harvesting of *aus* crops are in progress. Cattle-disease is reported from Teknuf and Kutubdia police-stations. Fodder and water are sufficient. *Panga* salt sells at 16 seers per rupee at Sadar and at 13 seers per rupee at Cox's Bazar.
	Cox's Bazar ..	5·33	12	10	
26	Tippera (Comilla).	3·67	9	10	Eleven annas jute crop is harvested. River level is higher.
	Brahmanbaria	1·19	10	10	
	Chandpur ..	3·90	9½	9½	
27	Noakhali ..	6·25	10	9	Jute crop is almost harvested. Fodder and water are sufficient.
	Feni ..	5·15	12	12	
28	Chittagong Hill Tracts.	1·96	11½	12	More rain is wanted. Condition of jhum crop is fair. Harvesting of *aus* paddy has begun.
29	Tripura State ..	0·98	8½	10	Weather seasonable. Cattle-pox exists at Sabroom. Cleansed cotton sells at Rs. 6 to Rs. 13½ per maund and jute at Rs. 2½ to Rs. 5 per maund.

(*n*) Not reported. * Burma rice.

(*a*) The rainfall at Haridaspur, which is very near to Gopalganj, is not shown here.

DACCA, *the 15th August 1931.*

J. C. ROY, for *Director of Agriculture, Bengal.*

Statement showing the daily gauge readings of certain rivers at the stations named below for the 31st July 1931.

Name of river and place where readings are taken.	Hour.	Reading on gauge.	Value of zero referred to P.W.D. datum.	Height above P. W. D. datum.	Compared with previous day's height.		Height above P. W. D. datum on same date in—	
					Rise.	Fall.	1930.	1929.
Ganges .. Monghyr	6 a.m. ..	118·90′	0·00′	118·90′	..	0·30′	124·40′	121·70′
Ganges .. Rajmahal	6 „ ..	80·40′	0·00′	80·40′	..	0·35′	82·10′	80·80′
Ganges .. Goalundo	8-54 „ ..	29·20′	1·409′	30·609′	0·20′	..	23·709′	26·209′
Bhagirathi .. Swarupganj	6 p.m. ..	23·75′	0·00′	23·75′	1·05′	..	23·77′	23·40′
Brahmaputra .. Dibrugarh	8 a.m.	34·70′	*302·70′	337·40′	..	0·60′	334·00′	..
Brahmaputra .. Gauhati	....	28·10′	136·958′	165·058′	..	0·10′	154·858′	155·658′
Brahmaputra .. Serajganj	12-24 p.m. ..	42·60′	1·509′	44·109′	0·20′	..	36·109′	39·309′
Dhaleswari .. Sabhar	7 a.m. ..	24·30′	0·00′	24·30′	0·60′	..	17·60′	21·10′
Meghna .. Fenchuganj	7 a.m. ..	28·55′	1·509′	30·059′	0·05′	..	27·109′	..
Meghna .. Bhairab Bazar	6-24 „ ..	21·17′	1·61′	22·78′	0·17′	..	19·44′	19·61′
Meghna .. Chandpur	6-54 p.m. ..	11·58′	1·61′	13·19′	0·08′	..	11·69′	12·69′
Lakhya .. Narayanganj	7 a.m. ..	24·80′	–5·59′	19·21′	0·34′	..	15·45′	16·78′
Madaripur Bil Route .. Takerhat	7-6 p.m. ..	13·10′	0·00′	13·10′	0·40′	..	11·20′	12·50′
Damodar .. Edilpur	6 a.m. ..	10·17′	92·58′	102·75′	1·50′	..	106·08′	104·75′

* Zero of gauge has been altered from 24th July 1931.

Statement showing the daily gauge readings of certain rivers at the stations named below for the 1st August 1931.

Name of river and place where readings are taken.	Hour.	Reading on gauge.	Value of zero referred to P. W. D. datum.	Height above P. W. D. datum.	Compared with previous day's height.		Height above P. W. D. datum on same date in—	
					Rise.	Fall.	1930.	1929.
Ganges .. Monghyr ..	6 a. m. ..	118·70′	0·00′	118 70′	..	0·20′	124 80′	122·70′
Ganges .. Rajmahal ..	6 „ ..	80·25′	0·00′	80·25′	..	0·15′	82·70′	80·85′
Ganges .. Goalundo ..	8-54 „ ..	27·40′	1·409′	28·809′	..	1·80′	24·209′	25·809′
Bhagirathi .. Swarupganj ..	6 p. m. ..	24·24′	0·00′	24·24′	0·49′	..	23·92′	23·82′
Brahmaputra .. Dibrugarh ..	8 a. m. ..	34·40′	*302·70′	337·40′	..	0·60′	333·80′	334·06′
Brahmaputra .. Gauhati ..	....	27·80′	136·958′	164·758′	0·30′	..	155·138′	155·358′
Brahmaputra .. Serajganj ..	12-24 p. m. ..	42·60′	1·509′	44·109′	Steady		36·609′	39·109′
Dhaleswari .. Sabhar ..	7 a.m. ..	24·70′	0·00′	24·70′	0·40′	..	17·70′	21·10′
Meghna .. Fenchuganj ..	7 a. m. ..	28·60′	1·509′	30·109′	0·05′	..	27·259′	..
Meghna .. Bhairab Bazar ..	6-24 „ ..	21·33′	1·61′	22·94′	0·17′	..	19 36′	19·44′
Meghna .. Chandpur ..	7-54 „ ..	11·75′	1·61′	13·36′	0·17′	..	11·61′	12·61′
Lakhya .. Narayanganj ..	7 a.m. ..	25·00′	—5·59′	19 41′	0·20′	..	15·49′	..
Madaripur Bil Route .. Takerhat ..	7-4 p.m. ..	13·45′	0·00′	13·45′	0·35′	..	11·30′	12·45′
Damodar .. Edilpur ..	6 a.m. ..	8·67′	92·58′	101·25′	..	1·50′	103·70′	103·83′

*Zero of gauge has been altered from 24th July 1931.

Statement showing the daily gauge readings of certain rivers at the stations named below for the 2nd August 1931.

Name of river and place where readings are taken.	Hour.	Reading on gauge.	Value of zero referred to P. W. D. datum.	Height above P. W. D. datum.	Compared with previous day's height.		Height above P. W. D. datum on same date in—	
					Rise.	Fall.	1930.	1929.
Ganges .. Monghyr ..	6 a.m. ..	118·60′	0·00′	118·60′	..	0·10′	124·70′	123·50′
Ganges .. Rajmahal ..	6 „ ..	80·20′	0·00′	80·20′	0·05′	..	83·10′	81·45′
Ganges .. Goalundo ..	8-54 „ ..	29·40′	1·409′	30·809′	0·20′	..	24·409′	25·609′
Bhagirathi .. Swarupganj ...	6 p.m. ..	24·31′	0·00	24·31′	0·07′	..	24·13′	24·02′
Brahmaputra .. Dibrugarh ..	8 a.m. ..	35·10′	*302·70′	337·80′	0·70′	..	334·10′	333·76′
Brahmaputra .. Gauhati ..	....	27·70′	136·958′	164·658′	..	0·10′	155·158′	155·158′
Brahmaputra .. Serajganj ..	12-24 p.m. ..	42·50′	1·509′	44·009′	..	0·10′	37·009′	38·909′
Dhaleswari .. Sabhar ..	7 a.m. ..	25·10′	0·00′	25·10′	0·40′	..	17·80′	21·10′
Meghna .. Fenchuganj ..	7 a.m. ..	28·60′	1·509′	30·109′	Steady		27·358′	27·909′
Meghna .. Bhairab Bazar ..	6-24 „ ..	21·67′	1·61′	23·28′	0·33′	..	19·28′	19·44′
Meghna .. Chandpur ..	8-54 „ ..	11·92′	1·61′	13·53′	0·17′	..	11·78′	12·61′
Lakhya .. Narayanganj ..	7 a.m. ..	25·17′	−5·59′	19·58′	0·17′	..	15·58′	16·53′
Madaripur Bil Route .. Takerhat ..	7-4 p.m. ..	13·70′	0·00′	13·70′	0·25′	..	11·30′	12·40′
Damodar .. Edilpur ..	6 a.m. ..	7·92′	92·58′	100·50′	..	0·75′	100·91′	101·41′

* Zero of gauge has been altered from 24th July 1931.

Statement showing the daily gauge readings of certain rivers at the stations named below for the 3rd August 1931.

Name of river and place where readings are taken.	Hour.	Reading on gauge.	Value of zero referred to P. W. D. datum.	Height above P.W.D. datum.	Compared with previous day's height.		Height above P. W. D. datum on same date in—	
					Rise.	Fall.	1930.	1929.
Ganges .. Monghyr	6 a.m. ..	118·60′	0·00′	118·60′	Steady		124·20′	124·10′
Ganges .. Rajmahal	6 „ ..	80·10′	0·00′	80·10′	..	0·10′	83·25′	81·85′
Ganges .. Goalundo	8-54 a.m. ..	29·40′	1·409′	30·809′	Steady		24·509′	25·609′
Bhagirathi .. Swarupganj	2 p.m. ..	24·21′	0·00′	24·21′	..	0·10′	24·30′	24·11′
Brahmaputra .. Dibrugarh	8 a.m. ..	35·50′	*302·70′	338·20′	0·40′	..	334·30′	334·76′
Brahmaputra .. Gauhati	....	27·40′	136·958′	164·358′	..	0·30′	155·058′	155·258′
Brahmaputra .. Sirajganj	12-24 p.m. ..	42·40′	1·509′	43·909′	..	0·10′	37·509′	38·709′
Dhaleswari .. Sabhar	7 a.m. ..	25·30′	0·00′	25·30′	0·20′	..	17·90′	21·00′
Meghna .. Fenchuganj	7 „ ..	28·60′	1·509′	30·109′	Steady		27·409′	27·809′
Meghna .. Bhairab Bazar	6-24 a.m. ..	21·75′	1·61′	23·36′	0·08′	..	19·28′	19·44′
Meghna .. Chandpur	9-54 „ ..	11·75′	1·61′	13·36′	..	0·17′	11·69′	12·53′
Lakhya .. Narayanganj	7 a.m. ..	25·25′	−5·59′	19·66′	0·08′	..	15·53′	16·66′
Madaripur Bil Route .. Takerhat	7-3 p.m.	13·90′	0·00′	13·90′	0·20′	..	11·50′	12·30′
Damodar .. Edilpur	6 a.m. ..	6·25′	92·58′	98·83′	..	1·67′	99·58′	100·16′

* Zero of gauge has been altered from 24th July 1931.

Statement showing the daily gauge readings of certain rivers at the stations named below for the 4th August 1931.

Name of river and place where readings are taken.	Hour.	Reading on gauge.	Value of zero referred to P. W. D. datum.	Height above P. W. D. datum.	Compared with previous day's height.		Height above P. W. D. datum on same date in—	
					Rise.	Fall.	1930.	1929.
Ganges .. Monghyr	6 a.m. ..	118·40′	0·00′	118·40′	..	0·20′	123·40′	124·40′
Ganges .. Rajmahal	6 „ ..	80·10′	0·00′	80·10′	Steady		83·15′	82·55′
Ganges .. Goalundo	8-54 „ ..	27 80′	1·409	29 2 9′	Steady		24·409′	25·99′
Bhagirathi .. Swarupganj	7 a.m. ..	24·12′	0·00′	24·12′	..	0·09′	24·43′	24·14′
Brahmaputra .. Dibrugarh	8 a.m. ..	34 70′	*302 70′	337·40′	..	0·80′	334·50′	336·06′
Brahmaputra .. Gauhati	....	27·20′	136·958′	164·158′	..	0·20′	154 958′	155·858′
Brahmaputra .. Serajganj	12-24 p.m. ..	42·30′	1·500′	43·809′	.	0·10′	37·909′	38·809′
Dhaleswari .. Sabhar	7 a.m. ..	25·50′	0·00′	25·50′	0·20′	..	18·10′	20·90′
Meghna .. Fenchuganj	7 a.m. ..	28·60′	1·509	30·109′	Steady		27·459′	27·809′
Meghna .. Bhairab Bazar	6-24 „ ..	21·75′	1·61′	23·36′	Steady		19·19′	19·53′
Meghna .. Chandpur	10-44 a.m. ..	11·33′	1·61′	12·94′	..	0·42′	11·69′	12·44′
Lakhya .. Narayanganj	7 a.m. ..	25·37′	—5·59′	19·78′	0·12′	..	15 41	16·70′
Madaripur Bil Route .. Takerhat	7-5 p.m. ..	14·00′	0·00′	14·00′	0·10′	..	11·50′	12·40′
Damodar .. Edilpur	6 a.m. ..	5·25′	92·58′	97·83′	..	1 00′	98·70′	100·70′

* Zero of gauge has been altered from 24th July 1931.

Statement showing the daily gauge readings of certain rivers at the stations named below for the 5th August 1931.

Name of river and place where readings are taken.	Hour.	Reading on gauge.	Value of zero referred to P. W. D. datum.	Height above P. W. D. datum.	Compared with previous day's height.		Height above P. W. D. datum on same date in—	
					Rise.	Fall.	1930.	1929.
Ganges .. Monghyr	6 a.m.	118·40′	0·00′	118·40′	Steady.		122·60′	124·10′
Ganges .. Rajmahal	6 „	80·15′	0·03′	80·15′	0·05′	..	82·65′	82·90′
Ganges .. Goalundo	8-54 „	29·40′	1·409′	30·809′	Steady.		24·609′	25·909′
Bhagirathi .. Swarupganj	7 a.m.	23·90′	0·00′	23·90′	..	0·22′	24·46′	24·25′
Brahmaputra .. Dibrugarh	8 a.m.	34·20′	*302·70′	336·90′	..	0·50′	334·50′	335·76′
Brahmaputra .. Gauhati	....	27·10′	136·958′	164·058′	..	0·10′	155·158′	156·058′
Brahmaputra .. Serajganj	12-24 p.m.	42·30′	1·509′	43·809′	Steady.		38·209′	38·809′
Dhaleswari .. Sabhar	7 a.m.	25·50′	0·00′	25·50′	Steady.		18·40′	20·80′
Meghna .. Fenchuganj	7 a.m.	28·55′	1·509′	30·059′	..	0·05′	27·459′	28·059′
Meghna .. Bhairab Bazar	6-24 „	21·75′	1·61′	23·36′	Steady.		19·11′	19·53′
Meghna .. Chandpur	11-29 „	11·17′	1·61′	12·78′	..	0·17′	11·78′	12·44′
Lakhya .. Narayanganj	7 a.m.	25·50′	−5·59′	19·91′	0·13′	..	15·49′	16·78′
Madaripur Bil Route .. Takerhat	7-3 p.m.	14·20′	0·00′	14·20′	0·20′	..	11·50′	12·40′
Damodar .. Edilpur	6 a.m.	5·92′	92·58′	98·50′	0·67′	..	100·75′	105·20′

*Zero of gauge has been altered from 24th July 1931.

Statement showing the daily gauge readings of certain rivers at the stations named below for the 6th August 1931.

Name of river and place where readings are taken.	Hour.	Reading on gauge.	Value of zero referred to P. W. D. datum.	Height above P. W. D. datum.	Compared with previous day's height.		Height above P. W. D. datum on same date in—	
					Rise.	Fall.	1930.	1929.
Ganges .. Monghyr ..	6 a.m. ..	118·50′	0·00′	118·50′	0·10′	..	122·00′	123·90′
Ganges .. Rajmahal ..	6 „ ..	80·20′	0·00′	80·20′	0·05′	..	81·85′	83·05′
Ganges .. Goalundo ..	8-54 „ ..	29·30′	1·409′	30·709′	..	0·10′	24·409′	25·909′
Bhagirathi .. Swarupganj ..	8 a.m. ..	23·81′	0·00′	23·81′	..	0·09′	24·42′	25·09′
Brahmaputra .. Dibrugarh ..	8 a.m. ..	33·90′	*302·70′	336·60′	..	0·30′	334·30′	335·36′
Brahmaputra .. Gauhati ..	....	26·90′	136·958′	163·858′	..	0·20′	155·358′	157·058′
Brahmaputra .. Serajganj ..	12-24 p.m.	42·20′	1·509′	43·709′	..	0·10′	38·209′	38·809′
Dhaleswari .. Sabhar ..	7 a.m. ..	25·50′	0·00′	25·50′	Steady.		18·70′	20·80′
Meghna .. Fenchuganj ..	7 a.m. ..	28·55′	1·509′	30·059′	Steady.		27·559′	28·159′
Meghna .. Bhairab Bazar ..	6-24 „ ..	21·80′	1·61′	23·41′	0·05′	..	19·11′	19·61′
Meghna .. Chandpur ..	12-14 p.m. ..	11·42′	1·61′	13·03′	0·25′	..	12·11′	12·36′
Lakhya .. Narayanganj ..	7 a.m. ..	25·67′	—5·59′	20·08′	0·17′	..	15·83′	16·91′
Madaripur Bil Route .. Takerhat ..	7-2 p.m. ..	14·30′	0·00′	14·30′	0·10′	..	11·60′	12·45′
Damodar .. Edilpur ..	6 a.m. ..	5·00′	92·58′	97·58′	..	0·92′	100·41′	104·83′

* Zero of gauge has been altered from 24th July 1931.

FORM C—BENGAL.

STATEMENT OF COTTON PRESSED IN THE BENGAL PRESIDENCY FOR THE WEEK ENDING 7th AUGUST 1931.

[Section 5 (2) of the Cotton Ginning and Pressing Factories Act, 1925.]

Name of Division or block.	Number of bales pressed.				District included in the block.
	During the week.	During the corresponding week, last year.	Since 1st September 1930 (the date prescribed by the Local Government as the commencement of the season).	During the corresponding period, last year.	
The Bengal Presidency	563 or 559·14 bales of 400 lbs. each.	621	33,611	32,538	All districts in the Presidency.

J. B. McBRIDE,

Chief Inspector of Factories, Bengal (offg.).

Supplementary statement showing particulars of a cotton pressing factory in Bengal with the special mark allotted to it as required under the Cotton Ginning and Pressing Factories Act, 1925, and the Rules made thereunder for the cotton year 1930.

Name and address of factory.	Name of owner or lessee.	Special mark allotted.
Vishnu Jute Press, 2, Turner Road, P. O. Cossipur ..	Mugneeram Bangur & Co. ..	18 L

J. B. McBRIDE,

Chief Inspector of Factories, Bengal (offg.).

BOARD OF REVENUE, BENGAL.

NOTIFICATION—No 8077 Misc.

Calcutta, the 7th August 1931.

The price-lists of staple food-crops in the local areas of Bengal, prepared under section 39 of the Bengal Tenancy Act, 1885 (VIII of 1885), for the period from 1st January to 31st March 1931, having been approved by the Board of Revenue, Bengal, are published for general information.

By order of the Board of Revenue, Bengal,

D. MACPHERSON,
Secretary.

Price-list (retail) of Staple Food-Crops in the local areas of Bengal, prepared under section 39 of the Bengal Tenancy Act (VIII of 1885), for three months from January to March 1931.

BURDWAN DIVISION.

Local areas	Marts at which prices were taken	Staple food-crop or crops.	Market days for the preparation of price-lists	Quantities per rupee in seers of 80 tolas, Company's weight			Average price for the quarter ending the 31st March 1931
				January.	February.	March	
BURDWAN.				S. c.	S. c.	S. c.	S. c.
Subdivision—							
Sadar ..	Burdwan Nutunganj.	Rice ..	Last day of every month ..	9 10	9 8	9 6	9 8
Asansol ..	Raniganj ..	Do. ..	27th of every month ..	10 14	10 0	10 0	10 5
Katwa ..	Katwa ..	Do. ..	Ditto	13 5	13 5	11 7	12 11
Kalna ..	Kalna ..	Do. ..	28th of every month ..	10 2	10 8	10 10	10 7
BIRBHUM							
Sadar ..	Suri ..	Do. ..	Last day of every month ..	13 0	18 0	12 0	14 5
Rampur Hât	Rampur Hât	Do. ..	Last Monday or Friday of every month.	12 0	11 0	9 0	10 11
BANKURA.							
Sadar ..	Bankura ..	Do. ..	Last day of every month ..	11 0	11 0	10 8	10 8
Vishnupur ..	Vishnupur ..	Do. .	Ditto	10 12	12 8	11 4	12 8
MIDNAPORE.							
Sadar ..	Colonelgola and School Bazar, town Midnapore.	Do. ..	Ditto	13 12	15 0	12 6	*13 11
Jhargram ..	Jhargram ..	Do. ..	First Sunday of each month ..	10 8	12 0	11 12	11 7
Ghatal ..	Ghatal Municipal Market	Do ..	27th of every month ..	12 4	14 8	11 6	12 11
Tamluk ..	Tamluk Bazar	Do. ..	Ditto	9 0	9 0	10 0	9 5
Contai ..	Kantanala Bazar, town Contai.	Do. ..	Last market day, i.e., last Sunday or Thursday, whichever is nearer to the last day of every month.	14 0	15 0	14 0	13 11
HOOGHLY.							
Sadar ..	Hooghly ..	Do. ..	Last Thursday of every month	11 0	10 5	10 0	10 7
Serampore ..	Serampore ..	Do. ..	First or last Saturday of every month.	8 0	10 0	10 0	9 5
Arambagh ..	Arambagh ..	Do. ..	Ditto	12 8	14 0	14 0	13 5
HOWRAH.							
Sadar ..	Ramkristopur	Do. .	Last day of every month ..	8 0	8 0	8 0	8 0
Uluberia ..	Uluberia ..	Do. ..	Last Saturday of every month	8 0	8 8	10 0	8 13

PRESIDENCY DIVISION.

24-PARGANAS.				S. c.	S. c.	S. c.	S. c.
Subdivision—							
Sadar ..	Chetla Hât ..	Rice ..	Last Wednesday of every month	9 8	10 8	8 11	9 9
Barasat and Barrackpore.	Barasat ..	Do. ..	Last market day which immediately precedes the last Saturday of every month.	9 12	11 7	10 0	10 6
Diamond Harbour.	Magrahât ..	Dó. ..	Ditto	11 7	12 11	12 4	12 2
Basirhat ..	Baduria ..	Do. ..	Second Tuesday of every month	9 0	12 0	12 12	11 4

PRESIDENCY DIVISION—*continued.*

Local areas.	Marts at which prices were taken.	Staple food-crop or crops.	Market days for the preparation of price-lists.	Quantities per rupee in seers of 80 tolas, Company's weight.			Average price for the quarter ending the 31st March 1931.
				January.	February.	March.	
NADIA.				S. c.	S. c.	S. c.	S. c.
Subdivision—							
Sadar ..	Goari ..	Rice ..	Last day of every month ..	10 10	10 0	10 0	10 3
Ranaghat ..	Ranaghat ..	Do. ..	28th of every month ..	10 0	10 0	9 12	9 15
Meherpur ..	Meherpur Kalibazar.	Do. ..	Last Monday of every month	9 12	9 12	9 12	9 12
Chuadanga ..	Chuadanga ..	Do. ..	Saturday immediately preceding the 28th of every month.	10 0	8 12	8 12	9 3
Kushtia ..	Bahadurkhali	Do. ..	28th of every month ..	9 0	10 0	10 0	9 11
MURSHIDABAD.							
Sadar ..	Berhampore Khagra.	Do. ..	Ditto	13 0	13 0	11 0	12 5
Lalbagh ..	Jiaganj ..	Do. ..	First Monday of every month..	14 0	13 4	11 0	12 7
Kandi ..	Kandi ..	Do. ..	The last market day before the 28th of every month.	11 14	13 4	13 0	12 15
Jangipur ..	Raghunathganj	Do. ..	Ditto	14 8	13 0	11 0	12 13
JESSORE.							
Sadar ..	Jessore ..	Do. ..	Monday or Friday falling on or next before the last day of every month.	9 0	11 8	11 0	10 8
Narail ..	Rupganj ..	Do. ..	Sunday or Thursday falling on or next before the 28th of every month, except February, in which the Monday or Friday falling on or next before the 26th.	10 0	10 0	10 0	10 0
Magura ..	Magura ..	Do. ..	Thursday or Sunday falling on or next before the 28th of every month, except February, in which the Thursday falling on or next before the 26th.	10 8	10 0	10 0	10 3
Jhenida ..	Jhenida ..	Do. ..	Ditto	9 0	9 0	9 8	9 3
Bongaon ..	Bongaon ..	Do. ..	Monday or Friday falling on or next before the 28th of every month, except February, in which the Monday or Friday falling on or next before the 26th.	12 5	12 5	11 7	12 0
KHULNA.							
Sadar ..	Khulna Bazar (*alias* Saheberhât).	Do. ..	Last market day of every month	11 8	11 8	11 12	11 9
Satkhira ..	Satkhira Bazar (*alias* Pranahire).	Do. ..	28th of every month, except February, when the price will be taken on the 26th.	9 0	10 0	10 0	9 11
Bagerhat ..	Bagerhat ..	Do. ..	Sunday falling on or before the 28th of every month, except February, when the price will be taken on the Sunday falling on or before the 26th.	10 0	11 0	11 0	10 11

DACCA DIVISION.

DACCA.				S. c.	S. c.	S. c.	S. c.
Subdivision—							
Narayanganj	Narayanganj Bazar.	Rice ..	Last market day before the 13th of every month.	11 8	10 8	9 0	10 5
Sadar ..	Dacca Town Imamganj Bazar.	Do. ..	Last market day of every month	9 5	10 7	9 11	9 13
Manikganj ..	Dasora Bazar	Do. ..	Market day falling on or immediately before the 28th of every month.	9 0	10 4	8 8	9 4
Munshiganj ..	Mirkadim ..	Do. ..	Last Sunday of every month	12 0	12 0	10 0	11 5

DACCA DIVISION—*continued.*

Local areas.	Marts at which prices were taken.	Staple food-crop or crops.	Market days for the preparation of price-lists.	Quantities per rupee in seers of 80 tolas, Company's weight.			Average price for the quarter ending the 31st March 1931.
				January.	February.	March.	
MYMENSINGH.				S. c.	S. c.	S. c.	S. c.
Subdivision—							
Jamalpur ..	Raniganj ..	Rice ..	Last market day of the 3rd week of every month.	12 8	13 0	12 0	12 8
Tangail ..	Kagmari ..	Do. ..	Ditto	9 0	10 4	10 4	9 13
Netrakona ..	Netrakona ..	Do. ..	Ditto	11 0	11 0	10 0	10 11
Sadar ..	Mechuabazar ..	Do. ..	Ditto	10 0	10 0	9 8	9 13
Kishorganj ..	Kishorganj ..	Do. ..	Ditto	10 10	10 10	5 10	8 15
FARIDPUR.							
Sadar ..	Faridpur ..	Do. ..	Last market day of every month	7 8	9 0	8 8	8 5
Madaripur ..	Madaripur ..	Do. ..	On the market day preceding the 28th of every month.	12 8	10 8	9 2	10 11
Goalundo ..	Rajbari ..	Do. ..	Ditto	9 8	10 8	10 8	10 3
Gopalganj ..	Gopalganj ..	Do. ..	Last market day of every month	9 0	10 0	8 8	9 3
BAKARGANJ.							
Patuakhali ..	Patuakhali ..	Do. ..	Last market day preceding the last day of every month.	11 8	11 6	11 0	11 5
Pirojpur ..	Rajganj ..	Do. ..	Ditto	9 12	12 8	10 8	10 15
Sadar ..	Barisal ..	Do. ..	Last day of every month ..	11 0	10 12	9 8	10 7
Dakshin Shahbazpur.	Bhola Hât ..	Do. ..	Last market day preceding the last day of every month.	10 0	11 2	9 0	10 1

CHITTAGONG DIVISION.

TIPPERA.				S. c.	S. c.	S. c.	S. c.
Subdivision—							
Brahmanbaria	Brahmanbaria	Rice ..	Market day immediately preceding the 28th of every month.	10 5	9 8	9 1	9 15
Sadar ..	Rajganja Bazar, Comilla.	Do. ..	Last market day of every month	10 0	10 0	8 0	9 5
Chandpur ..	Chandpur Old Bazar.	Do. ..	Market day immediately preceding the 28th of every month.	10 0	10 0	9 13	9 15
NOAKHALI.							
Sadar ..	Bara Bazar ..	Do. ..	Last market day of every month.	10 3	9 11	8 0	9 5
Feni ..	Feni Bazar ..	Do. ..	Ditto	8 0	9 0	8 0	8 5
CHITTAGONG.							
Sadar ..	Buxir Hât ..	Do. ..	Last Saturday of every month	11 8	10 8	12 8	11 8
Cox's Bazar ..	Cox's Bazar ..	Do. ..	Friday immediately preceding the 26th, or the 26th if that day happens to be a Friday.	8 0	9 0	9 8	8 13

RAJSHAHI DIVISION.

RAJSHAHI.				S. c.	S. c.	S. c.	S. c.
Subdivision—							
Sadar ..	Saheb Bazar ..	Rice ..	Last day of every month ..	12 0	12 0	10 0	11 5
Naogaon ..	Naogaon ..	Do. ..	Ditto	12 12	13 8	12 0	12 12
Nator ..	Nator ..	Do. ..	Ditto	10 4	12 0	9 0	10 7
DINAJPUR.							
Sadar ..	Rail Bazar Hât	Do. ..	Last market day of every month.	14 6	14 6	11 6	13 6
Thakurgaon	Lahirihat ..	Do. ..	....	13 0	13 0	13 0	13 0
Balurghat ..	Balurghat ..	Do. ..	....	14 0	16 0	12 0	14 0
JALPAIGURI.							
Alipur Duars	Alipur Duars ..	Do. ..	....	11 0	10 0	9 0	10 0
Sadar ..	Dinbazar ..	Do. ..	15th of every month ..	8 9	9 8	9 8	9 3

RAJSHAHI DIVISION—*continued.*

Local areas.	Marts at which prices were taken.	Staple food-crop or crops.	Market days for the preparation of price-lists.	Quantities per rupee in seers of 80 tolas, Company's weight.			Average price for the quarter ending 31st March 1931.
				January.	February.	March.	
RANGPUR.				S. c.	S. c.	S. c.	S. c.
Subdivision—							
Sadar ..	Nawabganj Chaliaamad, Rangpur.	Rice ..	Last Wednesday or Saturday, whichever may be close to the last day of every month.	9 0	9 0	9 0	9 0
Nilphamari ..	Sagarmacha ..	Do. ..	Last Wednesday or Sunday, whichever may be close to the 28th of every month.	12 0	12 8	11 4	11 15
Kurigram ..	Kurigram ..	Do. ..	Last Saturday or Tuesday next to the 28th of every month.	11 8	10 4	8 0	9 15
Gaibandha ..	Gaibandha Bazar	Do. ..	27th of every month ..	10 6	11 4	10 0	10 0
BOGRA.							
District of Bogra	Kalitala Hât ..	Do. ..	Last Sunday of every month ..	14 4	14 2	12 0	13 7
PABNA.							
Subdivision—							
Sadar ..	Pabna Bazar ..	Do. ..	15th of every month ..	8 8	9 0	10 0	9 3
Serajganj ..	Fariapati at Serajganj.	Do. ..	Ditto	9 0	10 0	10 0	9 11
MALDA.							
District of Malda	Balia Nawabganj	Do. ..	Second Wednesday of every month.	15 6	15 15	11 1	14 2

IRRIGATION DEPARTMENT, BENGAL.

Irrigation operations for the official year 1931-32.

Area leased for irrigation up to end of May 1931.

Circle.	District.	Canal.	Estimated full discharge.	Average discharge in month.	Discharge utilised.	Approximate area of land irrigated during the year up to the end of the month.	Approximate area of land under irrigation up to the same date last year.	Details of areas leased. Long term leases.	Season leases. Kharif.	Rabi.	Sugarcane.	Hot weather.	Total.	Grand Total.	Rainfall, 1931-32. During month.	Up to end of month.	Rainfall, 1930-31. During month.	Up to end of month.
			C.ft.	C.ft.	C.ft.	Acres.	Acres.	Acres.	Acres.	Acres.	Acres.	Acres.	Acres.	Acres.	Inches.	Inches.	Inches.	Inches.*
South-Western.	Midnapore	Midnapore	1,411	..	..	..	..	37,025	..	..	..	..	..	37,025	3·69	4·46	5·51	6·13
		Panskura	522	..	..	..	..	776	..	..	..	..	..	776	1·56	2·35	1·44	4·08
	Howrah ..	Tidal Reaches, Ranges I and II	..	..	..	..	..	..	..	..	..	..	..	..	4·85	6·52	5·04	5·24
		Total Midnapore Canal ..	..	..	..	..	..	37,801	..	..	..	..	..	37,801	..	..	..	..
		Total of the corresponding period, last year ..	..	..	..	..	..	47,378	1,744	..	..	..	1,744	49,122	..	..	.	..
	Burdwan and Hooghly.	Eden Canal	1,000	59	59	..	..	13,894	..	..	..	.	..	13,894	4·06	5·49	5·13	6·67
		Total of the corresponding period, last year ..	1,000	75	..	..	..	*17,791	.	4	17	..	21	17,812		..	..	..
		GRAND TOTAL ..	..	..	..	..	..	51,695	..	..	..	..	..	51,695	..	..	..	..
		GRAND TOTAL OF THE CORRESPONDING PERIOD OF LAST YEAR ..	..	..	..	..	..	65,169	1,744	4	* 17	..	1,765	66,934	..	..	..	..

*Of which 9 acres are bhadoi.

B. L. SUBARWAL,
Personal Assistant to the Chief Engineer to the Government of Bengal.

CALCUTTA, *the 8th August 1931.*

Statement showing the gauge readings at Dacca Waterworks on the river Buriganga for the week ending 8th August 1931.

Date.	At highest water		At lowest water.		Commencement of—		Remarks.	
	Time.	Reading.	Time.	Reading.	Ebb tide.	Flow tide.	At 7 a.m.	At 5 p.m.
1931.								
2nd August ..	Tide is not perceptible.						20·05	20·2
3rd „ ..							20·5	20·6
4th „ ..							20·75	20·8
5th „ ..							21·0	21·0
6th „ ..							21·1	21 15
7th „ ..							21·25	21·3
8th „ ..							21·3	21 3

B. M. on settling tank 39·49 O. M. S. L. Zero is at O. M. S. L.

Notable high and low water-levels of previous years.

		Taken at high tide.				Taken at low tide.
27th August	1906 ..	70·5		23rd February	1907 ..	51·06
5th September	1909 ..	66·86		13th „	1908 ..	51·06
10th August	1910 ..	69·86		12th March	1912 ..	51·06
1st „	1911 ..	68·46		6th „	1914 ..	50·60
13th „	1912 ..	67·16		22nd February	1915 ..	50·30
31st „	1915 ..	69·7		15th „	1916 ..	50·60
8th „	1916 ..	68·1		3rd March	1917 ..	51·0
12th „	1917 ..	67·1		21st February	1918 ..	51·40
13th „	1918 ..	69·12		26th „	1919 ..	50·4
2nd „	1919 ..	66·8		18th „	1920 ..	50·9
8th September	1920 ..	66·9		19th „	1921 ..	50·9
28th July	1921 ..	68·4		8th March	1922 ..	51·05
10th August	1922 ..	68·00		14th „	1923 ..	50·8
31st July	1923 ..	66·15		16th February	1924 ..	50·50
29th August	1924 ..	68·82		5th March	1925 ..	50·9
8th September	1925 ..	68·52		9th February	1926 ..	2·2
15th August	1926 ..	19·6		27th „	1927 ..	2·10
17th September	1927 ..	18·70		16th „	1928 ..	2·2
22nd August	1928 ..	20·0		21st „	1929 ..	2·0
13th July	1929 ..	17·8		24th „	1930 ..	2·3
12th September	1930 ..	18·65				

N. B.—Zero of the gauge at Dacca Waterworks prior to 11 a.m. on the 8th January 1926= −48·51 with reference to P. W. D. datum.

Zero of the gauge at Dacca Waterworks since 11 a.m. on the 8th January 1926=0·00 with reference to P. W. D. datum.

[ILLEGIBLE], for *Executive Engineer,*
Khulna Division.

KHULNA, *the 15th August 1931.*

Statement of weekly gauge readings on the river Ganges at Rampur Boalia for the week ending the 8th August 1931.

Date.	Hour.	Height of surface above zero of gauge.	Height of surface above P. W. D. datum.	Height of surface above P. W. D. datum on the same date of last year.	Remarks.
1931.					
2nd August ..	7 a.m.	....	56·50	58·20	Value of zero = 0·00 P. W. D.
3rd „ ..	7 „	....	56·55	58·40	
4th „ ..	7 „	....	56·60	58·60	Zero of gauge referred to B. M. on Rajshahi College step; value 64·73.
5th „ ..	7 „	....	56·65	58·40	
6th „ ..	7 „	....	56·80	57·80	
7th „ ..	7 „	....	56·90	57·40	
8th „ ..	7 „	....	57·00	56·90	

Highest recorded level on 26-8-1879=64·24.

Lowest recorded level on 25-4-1884=32·62.

RAMPUR BOALIA, *the 8th August 1931.*

P. C. BASU, *Subdivisional Officer,*
Irrigation Department, Rajshahi.

CALCUTTA IMPROVEMENT TRUST.

Calcutta, the 13th August 1931.

Notice under Section 43 of Bengal Act V of 1911.

Scheme No. XXXIX (Humayun Place Widening and Extension and Bertram Street Widening).

The Board of Trustees for the Improvement of Calcutta hereby give notice that a street scheme, viz., Scheme No. XXXIX (Humayun Place Widening and Extension and Bertram Street Widening) has been framed for the area bounded as follows:—

North.—From a point on the north-western boundary of 15 and 15/1, Chowringhee Road running eastward along the southern edge of Chowringhee Place and across Bertram Street to a point on the south-western corner of Municipal office.

East.—From this point running southwards along the eastern edge of Bertram Street to a point on the south-western corner of Municipal Market.

South.—From this point crossing Bertram Street to the south-eastern corner of 19, Lindsay Street; thence westwards along the northern edge of Lindsay Street to a point on the south-western corner of 20, Chowringhee Road.

West.—From this point northwards along the eastern edge of Chowringhee Road to the starting point.

Particulars of the scheme, a map of the area comprised in the scheme and a statement of land which it is proposed to acquire may be inspected at the offices of the Trust at 5, Clive Street, on week days between 11 a.m. and 4 p.m. and on Saturdays between 11 a.m. and 2 p.m.

Copies of the above documents will be delivered to the applicants on payment of the following fees:—

	Rs.	As.
Particulars of the scheme ...	0	4
Map of the scheme ...	1	0
Statement of land which it is proposed to acquire ...	0	4

Objections to the scheme will be received up to the 31st October 1931.

J. A. L. SWAN, *Chairman.*

Printed at the Bengal Government Press, Alipore, and published by the Bengal Secretariat Book Depot, Writers' Buildings, in the City of Calcutta, on the 20th August 1931.

Registered No. C207

The Calcutta Gazette

Extraordinary

THURSDAY, AUGUST 20, 1931.

GOVERNMENT OF BENGAL.

Political Department.

Political.

NOTIFICATIONS.

No. 14135P.—19th August 1931.—Whereas it appeared to the District Magistrate of Chittagong that the holding of unlicensed public meetings of more than five persons or processions consisting of more than five persons was likely to cause a disturbance of the public tranquillity or riot or affray, and whereas he issued an order, dated the 22nd April 1931, under section 144 of the Code of Criminal Procedure, 1898, prohibiting holding of meetings or taking out of processions within the municipality of Chittagong, Jetties and Pahartali without his written permission or without a license from the Superintendent of Police under section 30 of the Police Act, 1861 (Act V of 1861);

And whereas the local Government in exercise of the power conferred by section 144 (*6*) of the Code of Criminal Procedure directed in Political Department notification No. 878P.D., dated the 16th June 1931, that the aforesaid order should remain in force for a further period of two months with effect from the 22nd June 1931;

And whereas it appears to the local Government that the conditions in Chittagong which led to the issue by the District Magistrate of the aforesaid order still continue and that the holding of unlicensed public meetings or processions is likely to cause a riot or affray;

Now, therefore, in exercise of the power conferred by section 144 (*6*) of the Code of Criminal Procedure, it is hereby directed that the said order shall remain in force for a further period of two months with effect from the 22nd August 1931.

No. 14136P.—19th August 1931.—Whereas it appeared to the District Magistrate of Chittagong that the letting off of bombs or fireworks in Chittagong was likely to cause obstruction to the authorities responsible for the preservation of the public tranquillity, and whereas he issued an order, dated the 22nd April 1931, under section 144 of the Code of Criminal Procedure, 1898, directing all persons to abstain from letting off any bombs or fireworks within the police-stations of Kotwali, Panchalaish and Double-Moorings;

And whereas the local Government in exercise of the power conferred by section 144 (*6*) of the Code of Criminal Procedure directed in Political Department notification No. 939-P.D., dated the 22nd June 1931, that the aforesaid order should remain in force for a further period of two months with effect from the 22nd June 1931;

And whereas it appears to the local Government that the conditions in Chittagong which led to the issue by the District Magistrate of the aforesaid order still continue and that the letting off of bombs or fireworks is likely to cause a danger to human life or safety;

Now, therefore, in exercise of the power conferred by section 144 (*6*) of the Code of Criminal Procedure, it is hereby directed that the said order shall remain in force for a further period of two months with effect from the 22nd August 1931.

R. N. Reid,
Chief Secy. to the Govt. of Bengal (offg.).

Printed at the Bengal Government Press, Alipore, and published by the Bengal Secretariat Book Depot, Writers' Buildings, in the City of Calcutta, on the 20th August 1931.

Registered No. C207 *No. 35 of 1931*

BENGAL SECRETARIAT LIBRARY

The Calcutta Gazette

THURSDAY, AUGUST 27, 1931.

CONTENTS:

	PAGE.
PART I.—Orders and Notifications by the Governor of Bengal, the Government of Bengal, the High Court, Government Treasury, etc.	993—1036
PART IA.—Orders and Notifications by the Government of India republished for general information	229—232
PART IB.—Educational Notices ..	883—884
PART II.—Advertisements	735—791
PART III.—Acts of the Bengal Legislative Council	*Nil*
PART IV.—Bills introduced in the Bengal Legislative Council, Reports of Select Committees presented or to be presented to that Council, and Bills published before introduction in that Council ..	*Nil*
PART V.—Acts of the Indian Legislature assented to by the Governor General and Ordinances promulgated under section 72 of the Government of India Act ..	*Nil*
PART VI —Bills introduced in the Council of State and Legislative Assembly, Reports of Select Committees presented to the Council and Assembly and Bills published under Rule 18 of the Indian Legislative Rules	*Nil*
SUPPLEMENT No. 35—	
Cotton Ginning and Pressing—Daily rainfall—Major and Minor Works—Weekly gauge readings—Weekly Weather and Crop Report—Prices current—Daily gauge readings—Calcutta Improvement Trust Notice ..	1079—1114
Annual report on the working of the Survey Departments, Bengal, under the Inland Steam Vessels Act, I of 1917, for the year 1930 31	1115—1116

Part I

Orders and Notifications by the Governor of Bengal, the Government of Bengal, the High Court, Government Treasury, etc.

ORDERS BY HIS EXCELLENCY THE GOVERNOR OF BENGAL.

Tour Programme of His Excellency the Governor of Bengal, during September 1931.

Government House, Calcutta, the 15th August 1931.

His Excellency the Governor of Bengal will leave Calcutta by special train on the evening of the 1st September 1931 and arrive at Darjeeling the following morning. His Excellency's departure and arrival will be private

The party accompanying His Excellency will be—

The Hon'ble Lady Jackson

J. D Tyson, Esq., I.C.S, Private Secretary.

Lieut.-Colonel W. A. K. Fraser, C.B.E., D.S.O, M.V.O., M.C., Military Secretary.

Lieut.-Colonel H. Hingston, I.M.S., Surgeon

Captain J. V. Gordon, Aide-de-Camp.

Captain J. F. Ross, Aide-de-Camp.

Captain A. C. Maynard, Aide-de-Camp.

Captain J F Milburne, Aide-de-Camp

All communications intended to reach His Excellency and party should be addressed to Governor's Camp, Bengal, *without the addition of any post town*

W A K FRASER, LIEUT.-COLONEL,

Mily Secy. to H. E. the Governor of Bengal.

ORDERS BY THE GOVERNMENT OF BENGAL.

No. 7700A.

Appointments and Transfers.

GENERAL.

Jessore-Chittagong.—No. 7421A. — 18th August 1931.—The orders of the 24th July 1931, transferring Babu Surendra Mohan Bhaumik, Deputy Magistrate and Deputy Collector, Narail, Jessore, to the headquarters station of the Chittagong district, are cancelled.

Midnapore-Bakarganj. — No. 7501A.—20th August 1931.—The orders of the 24th July 1931, transferring Babu Binay Bhusan Das Gupta, Deputy Magistrate and Deputy Collector, Midnapore, to the Pirojpur subdivision of the Bakarganj district, are cancelled.

Hooghly - Chittagong.—No. 7513A.—20th August 1931.—Babu Binode Mohan Chakrabatti, Deputy Magistrate and Deputy Collector, on probation, Hooghly, is transferred to the headquarters station of the Chittagong district.

Midnapore. — No. 7550A. — 21st August 1931.—Babu Anadi Nath Sen, Deputy Magistrate and Deputy Collector, on leave, is posted to the headquarters station of the Midnapore district.

Rangpur.—No. 7553A.—21st August 1931. —Babu Subodh Chandra Mitra, Deputy Magistrate and Deputy Collector, on leave, is posted to the headquarters station of the Rapgpur district.

Midnapore - Bakarganj.—No. 7556A.—21st August 1931.—Babu Binay Bhusan Das Gupta, Deputy Magistrate and Deputy Collector, Midnapore, is transferred to the Patuakhali subdivision of the Bakarganj district.

Bakarganj - Chittagong.—No. 7559A.—21st August 1931.—Babu Basanta Kumar Banarji, Deputy Magistrate and Deputy Collector, Patuakhali, Bakarganj, is transferred to the headquarters station of the Chittagong district.

Calcutta - Rajshahi Divn.—No. 7591A.—21st August 1931.—Mr. Norman Bose, Sub-Deputy Collector, employed in the Calcutta Collectorate, is transferred to the Rajshahi division.

Birbhum - Hooghly. — No. 7622A.—22nd August 1931.—Babu Srimanta Kumar Das Gupta, M.B.E., Deputy Magistrate and Deputy Collector, Birbhum, is appointed temporarily to act as Magistrate and Collector, Hooghly.

Rajshahi-24-Parganas.—No. 7675A.—24th August 1931.—Mr. G. G. Hooper, I.C.S., District and Sessions Judge, Rajshahi and Malda, is appointed temporarily to act as District and Sessions Judge, 24-Parganas.

Rajshahi.—No. 7679A.—24th August 1931. —Babu Khagendra Nath Datta, Additional District and Sessions Judge, Rajshahi and Malda, is appointed temporarily to act as District and Sessions Judge of those districts.

Nadia-Rajshahi. — No. 7693A. — 24th August 1931.—Maulvi Hasibuddin Ahmad, Subordinate Judge and Assistant Sessions Judge, Nadia, is appointed temporarily to act as Additional District and Sessions Judge, Rajshahi.

Dacca-Dacca Divn. — No. 7708A. — 25th August 1931.—Mr. L. G. Durno, I.C.S., Magistrate and Collector, Dacca, is appointed temporarily to act, in addition to his own duties, as Commissioner of the Dacca Division.

POLICE.

Malda-Mymensingh.—No. 7327A. — 15th August 1931.—Mr. S. G. Taylor, Superintendent of Police, Malda, is appointed to be Superintendent of Police, Mymensingh.

ECCLESIASTICAL.

No. 7461A.—19th August 1931.—The orders contained in notification No. 10503A., dated the 10th September 1924, granting licenses, under sections 6 and 9 of the Indian Christian Marriage Act, XV of 1872, to the Reverend Thornton Selden Howie and appointing him a Registrar of Births and Deaths under Act VI of 1886, are cancelled.

Calcutta.—No. 7458A.—19th August 1931. —The Reverend William Craig Eadie of the Carey Baptist Church, Calcutta, is authorised, under section 6 of Act XV of 1872, to solemnize marriages between persons one or both of whom is or are a Christian or Christians

and, under section 9 of the Act, to grant certificates of marriages between persons who are native Christians.

He is also appointed, under Act VI of 1886, to be a Registrar of Births and Deaths for Calcutta.

Calcutta.—No. 7516A.—20th August 1931.—The Reverend C. G. Pearson, Chaplain, on leave, is appointed to be the Senior Chaplain of St. Paul's Cathedral, Calcutta, with effect from the 19th October 1931, or any subsequent date on which he may take over charge of his duties.

Confirmation.

GENERAL.

Presy. Divn. — No. 7488A.—19th August 1931.—Maulvi Adil-uz-Zaman Khan, Deputy Magistrate and Deputy Collector, is confirmed in his appointment as a Personal Assistant to the Commissioner of the Presidency Division.

Leave.

GENERAL.

No. 7380A.—17th August 1931.—Maulvi Nuruddin Ahmad, No. 11, Sub-Deputy Collector, is allowed leave on average pay up to the 14th October 1931, under rule 81 (*b*) (*ii*) of the Fundamental Rules, in extension of the leave granted to him under the orders of the 4th July 1931.

Hooghly.—No. 7408A.—18th August 1931.—Mr. Rangachari Srinivasadesika Krishnaswamy, I.C.S., Assistant Magistrate and Collector, Hooghly, was on leave on half average pay for one day, under rule 81 (*d*) of the Fundamental Rules, in extension of the leave granted to him under the orders of the 18th July 1931.

Hooghly-Mymensingh.—No. 7427A.—18th August 1931.—Mr. Motiram Khushiram Kirpalani, I.C.S., Joint Magistrate and Deputy Collector, Serampore, Hooghly, is allowed leave on average pay for two months, under rule 81 (*b*) (*ii*) of the Fundamental Rules, with effect from the 15th August 1931.

The orders contained in notification No. 6095A., dated the 22nd July 1931, transferring him to the headquarters station of the Mymensingh district are cancelled.

No. 7445A.—18th August 1931.—Babu Sachindra Mohan Guha, Sub-Deputy Collector, is allowed leave for twenty-nine days in extension of the leave granted to him under the orders of the 18th May 1931, viz., leave on average pay for nineteen days, under rule 81 (*b*) (*ii*) of the Fundamental Rules, and leave on half average pay for the remaining period, under rule 81 (*d*) of those Rules.

Hooghly.—No. 7619A.—22nd August 1931.—Mr. A. S. Larkin, I.C.S., Magistrate and Collector, Hooghly, is allowed leave on average pay from the 5th September to the 30th September 1931, under rule 81 (*b*) (*i*) of the Fundamental Rules.

Jessore.—No. 7628A.—22nd August 1931.—Babu Surendra Mohan Bhaumik, Deputy Magistrate and Deputy Collector, Narail, Jessore, is allowed leave on average pay for four months, under rule 81 (*b*) (*ii*) of the Fundamental Rules, with effect from the 14th August 1931.

Calcutta.—No. 7638A.—24th August 1931.—Mr. W. McC. Sharpe, I.C.S., Registrar, High Court, Calcutta, is allowed leave from the 16th November 1931 to the 30th September 1932, viz., leave on average pay for four months and twenty-three days, under rule 81 (*b*) (*i*) of the Fundamental Rules, and leave on half average pay for the remaining period, under rule 81 (*d*) of those Rules.

R. N. REID,
Chief Secy. to the Govt. of Bengal (offg.).

NOTIFICATION.

No. 7413A.—18th August 1931.—In notification No. 6008A., dated the 20th July 1931, published at pages 877-78 of Part I of the *Calcutta Gazette*, dated the 23rd July 1931, announcing the result of the first half-yearly departmental examination, held in May 1931, *substitute* the following *for* item (vi) under the First or Lower Standard :—

"(*vi*) The following I.M.D. Officer has passed in Bengali (colloquial test) :—

Dr. W. A. Browne."

R. N. REID,
Chief Secy. to the Govt. of Bengal (offg.).

POLITICAL DEPARTMENT.

Political.

NOTIFICATIONS.

No. 14014P.—19th August 1931.—In exercise of the power conferred by section 99A of the Code of Criminal Procedure, 1898 (Act V of 1898), the Governor in Council hereby declares to be forfeited to His Majesty all copies, wherever found, of a picture entitled "Atyachari Sasanse Pirit Hokar Bharatmataki Pukar" on top and "Sesh-Sayee" below in Hindi portraying Mother India pointing out to Mahatma Gandhi seated under the hood of a five headed snake which is floating on a river people being assaulted by the Police while Pandit Jaharlal Nehru and other Congress and Revolutionary leaders are standing and awaiting his orders, on the ground that the said picture contains matter which brings or attempts to bring into hatred or contempt and excites or attempts to excite disaffection towards the Government established by law in British India, the publication of which is punishable under section 124A of the Indian Penal Code.

No. 14213P.—21st August 1931.—In pursuance of the provision of sub-section (*2*) of section 14 of the Cantonments Act, 1924 (II of 1924), the Governor in Council is pleased to declare that a vacancy has occurred in the Barrackpore Cantonment Board by reason of the acceptance of the resignation tendered by Mr. H. H. Hessling of his office of member of the said Board.

No. 14219P.—21st August 1931.—Whereas a vacancy has occurred in the Barrackpore Cantonment Board constituted under the Cantonments Act, 1924 (II of 1924), by reason of the acceptance of the resignation of Mr. H. H. Hessling, the Governor in Council is pleased, in pursuance of sub-section (*2*) of section 16 of the said Act, to direct that the election to fill the said vacancy shall take place on Monday, the 28th September 1931.

No. 14308P.—24th August 1931.—In exercise of the power conferred by section 99A of the Code of Criminal Procedure, 1898 (Act V of 1898), the Governor in Council hereby declares to be forfeited to His Majesty all copies, wherever found, of the book entitled "India in World Politics" by Tarak Das, printed at Sree Saraswaty Press, Calcutta, and published by S. N. Shaw, Saraswaty Library, 9, Ramanath Mazumder Street, Calcutta, on the ground that the said book contains matter which brings or attempts to bring into hatred or contempt and excites or attempts to excite disaffection towards the Government established by law in British India, the publication of which is punishable under section 124A of the Indian Penal Code.

No. 14399P. — 25th August 1931. — In exercise of the power conferred by section 99A of the Code of Criminal Procedure, 1898 (Act V of 1898), the Governor in Council hereby declares to be forfeited to His Majesty all copies, wherever found, of a Bengali pamphlet entitled "24-Pargana Jela Rashtriya Sammelan, Tritiya Adhibesan, Abhyarthana Samitir Sabhapati Daktar Indu Bhushan Ghosaler Abhibhasan" printed at Sri Gouranga Press, 71/1, Mirzapore Street, Calcutta, and published by him from Diamond Harbour Road, Behala, on the ground that the said pamphlet contains matter which brings or attempts to bring into hatred or contempt and excites or attempts to excite disaffection towards the Government established by law in British India, the publication of which is punishable under section 124A of the Indian Penal Code.

R. N. REID,
Chief Secy. to the Govt. of Bengal (offg.).

Jails.

Orders by the Inspector-General of Prisons, Bengal.

No. 22198.—18th August 1931. — Dr. Probhat Chandra Mukherji made over medical charge of Hijli Additional Special Jail to Dr. Charu Chandra Banerji on the afternoon of the 20th July 1931.

No. 22408.—19th August 1931. — Dr. Narendra Nath Chowdhury made over charge of the Jessore Jail to Dr. Radha Raman Ghosh on the forenoon of the 4th August 1931.

No. 22409.—19th August 1931.—Dr. Charu Chandra Banerjee made over medical charge of the Hijli Additional Special Jail to Dr. Narendra Nath Chowdhury on the forenoon of the 9th August 1931.

R. E. FLOWERDEW, LT.-COL., I.M.S.,
Inspector-General of Prisons, Bengal.

JUDICIAL DEPARTMENT.

No. 7701A.

Powers.

Mymensingh.—No. 7291A.—15th August 1931.—Mr. Shaibal Kumar Gupta, I.C.S., Joint Magistrate and Deputy Collector, Mymensingh, is vested with the powers of a Subordinate Judge within that district.

Dinajpur.—No. 7416A.—18th August 1931.—Maulvi Muhammad Abdus Subhan, Sub-Deputy Magistrate, Thakurgaon, Dinajpur, is vested with the powers of a Magistrate of the third class.

No. 7439A.—18th August 1931.—The officers named below are vested with the powers of a Magistrate of the third class—

Babu Manoranjan Sarkar, Deputy Magistrate, on probation, Burdwan.

Maulvi Muhammad Husain Ali, Sub-Deputy Magistrate, on probation, Dacca.

Maulvi Muhammad Rafique, Sub-Deputy Magistrate, on probation, Tippera.

Maulvi Khundkar Abdul Latif, Sub-Deputy Magistrate, on probation, Bogra.

Babu Dhiraj Kumar Bhattacharji, Sub-Deputy Magistrate, on probation, Khulna.

Noakhali.—No. 7464A.—19th August 1931.—Babu Niranjan Mohan Bardhan, Deputy Magistrate, Noakhali, is vested with the power to try summarily the offences mentioned in section 260 of the Code of Criminal Procedure. He is also vested with powers under section 190 (*1*) (*c*) of the Code.

R. N. REID,
Chief Secy. to the Govt. of Bengal (offg.).

Appointments and Transfers.

24-Parganas.—No. 6105J. — 20th August 1931.—In exercise of the powers conferred by sections 14 and 15 and the proviso to section 357 of the Code of Criminal Procedure, 1898 (Act V of 1898), the Governor in Council is pleased—

(*a*) to confer upon Babu Gour Chandra Mandal the powers of a Magistrate of the third class, in the district of the 24-Parganas, for a period of three years from the 14th September 1931,

(*b*) to direct him to sit as a member of the Palta bench in the said district, and

(*c*) to direct him to take down evidence in the English language.

Chittagong.—No. 6107J. — 20th August 1931.—Babu Birendra Chandra Sen Gupta, munsif, on leave, is appointed to act as Second Additional Subordinate Judge, Chittagong, *vice* Babu Tarak Nath Basu, or until further orders.

Faridpur.—No. 6109J.—20th August 1931.—Babu Naresh Chandra Chakrabatti, No. I, munsif of Bhanga, in the district of Faridpur, is reappointed to be additional munsif of Faridpur and Madaripur, but for the present to be employed at Madaripur.

Faridpur.—No. 6205J.—21st August 1931.—In exercise of the powers conferred by sections 14 and 15 and the proviso to section 357 of the Code of Criminal Procedure, 1898 (Act V of 1898), the Governor in Council is pleased—

(*a*) to confer upon Maulvi Shah Abdul Mannan the powers of a Magistrate of the second class, in the district of Faridpur, for a period of three years from the 31st August 1931, in respect to such cases as may be made over to him within the limits of the Sadar subdivision of the said district,

(*b*) to direct that he shall, in addition to sitting singly, sit as a member of the Sadar bench in the said district, and

(*c*) to direct him to take down evidence in the English language.

Tippera.—No. 6207J.—21st August 1931.—Babu Gauri Sankar Chatarji, officiating munsif of Comilla, in the district of Tippera, is appointed to act as a munsif in the same district, to be ordinarily stationed at Kasba, during the absence, on leave, of Babu Renupada Mukharji, or until further orders.

Confirmation.

No. 6112J.—20th August 1931.—The following officiating munsifs are confirmed as munsifs in the vacancies mentioned against each;—

Babu Gobinda Prasad Palit, officiating munsif, Burdwan, with effect from the 19th December 1930, *vice* Babu Narendra Kumar Mukharji, confirmed as Sub-Judge.

He is also confirmed in his present appointment.

Babu Anukul Chandra Lahiri, officiating munsif, Chikandi, Faridpur, with effect from the 8th January 1931, *vice* Babu Kshirada Ranjan Dhar, confirmed as Sub-Judge.

He is also confirmed in his present appointment.

Maulvi Shaharuddin Ahmed, officiating munsif, Jalpaiguri, with effect from the 9th January 1931, *vice* Babu Jyotish Chandra Neogi, confirmed as Sub-Judge.

He is also confirmed in his present appointment.

Babu Manindra Mohan Bhattacharji, officiating munsif, Malda, with effect from the 7th April 1931, *vice* Babu Bhujagendra Mustafi, confirmed as Sub-Judge.

He is also confirmed in his present appointment.

Maulvi Hedayet Ullah, officiating munsif, Khatra, Bankura, with effect from the 10th January 1931, *vice* Babu Rajendra Kumar Gupta, confirmed as Sub-Judge.

He is also confirmed in his present appointment.

Maulvi Abdul Maleque, officiating munsif, North Raojan, Chittagong, with effect from the 16th March 1931, *vice* Babu Madhu Sudan Ray, confirmed as Sub-Judge.

He is also confirmed in his present appointment.

NOTIFICATIONS.

Mymensingh.—No. 6064J.—18th August 1931.—In exercise of the power conferred by section 65 of the Bengal Village Self-Government Act, 1919 (Bengal Act V of 1919), the Governor in Council is pleased to appoint the following members of the Aona union board within the Sarishabari police-station in the Jamalpur subdivision of the Mymensingh district to be, during their term of office as such members, a union bench within the jurisdiction of the said union board for the purposes of that section:—

Maulvi Nawab Ali Talukdar.

Babu Umesh Chandra Saha Chaudhuri.

Maulvi Iman Ali Talukdar.

Mymensingh.—No. 6065J.—18th August 1931.—In exercise of the power conferred by section 73 of the Bengal Village Self-Government Act, 1919 (Bengal Act V of 1919), the Governor in Council is pleased to appoint the following members of the Aona union board within the Sarishabari police-station in the Jamalpur subdivision of the Mymensingh district to be, during their term of office as such members, a union court within the jurisdiction of the said union board for the purposes of that section:—

Maulvi Nawab Ali Talukdar.

Babu Umesh Chandra Saha Chaudhuri.

Maulvi Iman Ali Talukdar.

Bakarganj.—No. 6156J.—21st August 1931.—In exercise of the power conferred by section 65 of the Bengal Village Self-Government Act, 1919 (Bengal Act V of 1919), the Governor in Council is pleased to appoint the following members of the Pakshia union board within the Barhanuddi police-station in the Bhola subdivision of the Bakarganj district to be, during their term of office as such members, a union bench within the jurisdiction of the said union board for the purposes of that section:—

Maulvi Mir Bazlar Rahman.

Maulvi Syed Azizar Rahaman.

Babu Jajneswar De.

Dacca.—No. 6223J.—24th August 1931.—In exercise of the power conferred by section 65 of the Bengal Village Self-Government Act, 1919 (Bengal Act V of 1919), the Governor in Council is pleased to appoint the following members of the Dhamgar union board within the Baidyerbazar police-station in the Narayanganj subdivision of the Dacca district to be, during their term of office as such members, a union bench within the jurisdiction of the said union board for the purposes of that section:—

Babu Bharat Chandra Ray.

Munshi Dil Muhammad.

Munshi Abdur Rahman Molla.

Munshi Babar Ali.

2. This notification will take effect from the date of the first meeting of the reconstituted union board at which a quorum is present.

Dacca.—No. 6224J.—24th August 1931.—In exercise of the power conferred by section 73 of the Bengal Village Self-Government Act, 1919 (Bengal Act V of 1919), the Governor in Council is pleased to appoint the following members of the Dhamgar union board within the Baidyerbazar police-station in the Narayanganj subdivision of the Dacca district to be, during their term of office as such members, a union court within the jurisdiction of the said union board for the purposes of that section:—

Babu Bharat Chandra Ray.

Munshi Dil Muhammad.

Munshi Abdur Rahman Molla.

Munshi Babar Ali.

2. This notification will take effect from the date of the first meeting of the reconstituted union board at which a quorum is present.

J. W. NELSON,
Secy. to the Govt. of Bengal.

LOCAL SELF-GOVERNMENT DEPARTMENT.

NOTIFICATIONS.

Minister-in-charge: The Hon'ble Mr. Bijoy Prasad Singh Roy.

Rajshahi.—No. 2724 L.S.-G. –17th July 1931.—In exercise of the power conferred by section 5 of Bengal Village Self-Government Act 1919 (Bengal Act V of 1919), and, (after considering the views of the Rajshahi District Board and the Nator local board, the Government of Bengal (Ministry of Local Self-Government) are pleased to direct that each of the following local areas in thanas Nator, Singra, Nandigram, Baraigram, Gurudaspur, Lalpur and Bagatipara in the Nator subdivision of the Rajshahi district shall be declared a union for the purposes of the Act.

2. In exercise of the power conferred by subsection (3) of section 6 of the said Act, the Government of Bengal (Ministry of Local Self-Government) are pleased to establish union boards for each of the unions hereby declared and to fix nine as the number of members of each union board.

3. In exercise of the power conferred by subsection (3) of section 6 of the said Act, the Government of Bengal (Ministry of Local Self-Government) are pleased to direct that one-third of the members of each union board shall be appointed by the District Magistrate on the grounds that electors are inexperienced and that such appointment is necessary for the due representation of minorities.

Rajshahi District Board.

Nator local board.

Nator thana.

Brahmapur union.

Names of mauzas constituting the unions with their numbers in the jurisdiction list.		
Komarpur	..	1
Khudra Barihati	..	2
Jagadispur Barihati	..	3
Chak Sarkutia	..	4
Sarkutia	..	5
Abdanpur	..	6
Kasiabari	..	9
Brahmapur	..	10
Bangal Khalsi	..	11
Haludghar	..	12
Sokhpara	..	13
Chhatarbhag	..	14
Dhankora	..	15
Sankharipara	..	34
Kutripara	..	35
Burirbhag	..	36
Naopara	..	37
Cheukhali	..	7
Iyarpur	..	8
Dhobapukur	..	38
Naldanga	..	39

Madhnagar union.

Sonapatil	..	40
Tegharia	..	41
Madhabpur	..	42
Banslia	..	213
Purba Madhnagar	..	214
Paschim Madhnagar	..	215
Purushottambati	..	216
Bil Ruhia	..	217
Agnagari	..	224
Nuriagachha	..	225
Debipur	..	226
Bhatpara	..	227
Halti	..	228

Khajura union.

Names of mauzas constituting the unions with their numbers in the jurisdiction list.		
Durlabhpur	..	218
Sadhnagar	..	219
Mahishdanga	..	220
Gopalbati	..	223
Janardanbati	..	221
Khajura	..	222
Chandpur	..	232
Parbisa	..	233
Parkul	..	234
Hatbila	..	235
Karergaon	..	236
Kayagutia	..	237
Barat	..	238
Bhedagari	..	239
Dighirpar	..	240
Molla Ayat	..	246
Bamangaon	..	247
Goalghat	..	248
Kismat Goalbari	..	249
Sujanagar Goalbari	..	250
Madandanga	..	251
Batkadaha	..	252
Batkadaha Arazi	..	253
Ekdala	..	229
Udgari	..	230
Kochkuri	..	231

Piprul union.

Bangalpara	..	43
Syamnagar	..	44
Surjyabari	..	45
Bansbhag	..	209
Durgapur	..	210
Kumudbati	..	211
Hapania	..	258
Bil Joani	..	212
Piprul	..	259
Patul	..	257
Kholabaria	..	241
Majhgaonkuri	..	242
Bil Piprul	..	245
Khariat	..	243
Bil Halti	..	244
Achrakhali	..	256
Kaligunj	..	260
Bhusangachha	..	255
Ray Singpur	..	254
Thakur Lakshmikol	..	208

Bipra Belgharia union.

Bil Ramsa	..	16
Isanpur	..	17
Singa	..	18
Kansabaria	..	19
Samash Khalsi	..	20
Harida Khalsi	..	21
Chak Kesabpur	..	22
Jitamitrapur	..	27
Nasaratpur	..	28
Chak Bhabanipur	..	29
Baidya Belgharia	..	30
Chalitabari	..	32
Banurbhag	..	33
Belgharia Sibpur	..	31
Basudebpur	..	46
Bipra Belgharia	..	47
Krishnapur Digha	..	23
Maminpur	..	24
Mirzapur	..	26

Chhatni union.

Names of mauzas constituting the unions with their numbers in the jurisdiction list.		
Majhdigha	..	25
Panditgaon	..	53
Harigachha	..	54
Harigachhi	..	55
Chhatni Sibpur	..	56
Raypur	..	57
Rajibbati	..	58
Srirampur	..	59
Chhatni	..	68
Gokulpur	..	69
Amhati Sibpur	..	70
Syampur	..	49
Agdigha	..	62
Bilchandrabati	..	48
Faridpur	..	50
Amhati Kalikapur	..	51
Raghunathpur	..	52
Bishnupur	..	205
Salempur Amhati	..	206
Amhati	..	207
Keshabpur	..	60
Chhatni Bazeafti	..	61

Tebaria union.

Chandrakala	..	63
Bamandanga	..	64
Lochangar	..	65
Chak Lochangar	..	66
Bhatpara	..	67
Atgharia	..	84
Bargachha	..	71
Hogalbaria	..	72
Chak Baidyanath	..	73
Ban Belgharia	..	74
Narayanpur	..	75
Ekdala	..	76
Hat Singardaha	..	77
Lengra	..	78
Purbapara	..	79
Tebaria	..	201
Jangali	..	199
Dakshinpara	..	80
Kaigari	..	310
Chak Masura	..	197
Rameshwarpur	..	198
Kaigari Krishnapur	..	200
Chak Krishnapur	..	193
Srikrishnapur	..	194
Ramnagar	..	195

Dighapatia union.

Bhaturia Lakshmikol	..	263
Purba Hagharia	..	270
Dighapatia	..	264
Hagharia Lakshmiraj		265
Paschim Hagharia	..	266
Bagsar	..	261
Tegachhi	..	262
Naopara	..	271
Dhakapara	..	272
Goaldighi Krishnapur	..	273
Baruhat	..	274
Nepaldighi	..	277
Sibdurga	..	268
Ichhlabaria	..	269
Karota	..	301
Chhota Harispur	..	267
Gobindapur	..	275
Talgachhi	..	276

Names of mauzas constituting the unions with their numbers in the jurisdiction list.		
Baladkhal	..	278
Goaldighi	..	275/355
Bagbaria	..	279
Kakbaria	..	280
Gangail	..	281
Dharail	..	282

Lakshmipur Kholabaria union.

Rayghat	..	283
Jhinapara	..	284
Nalkhola	..	285
Matikopa	..	286
Chirakhola	..	287
Hat Halsa	..	288
Ray Halsa	..	289
Chak Bagrom	..	290
Bipra Halsa	..	291
Pale Halsa	..	292
Par Halsa	..	293
Bagrom	..	297
Halsa	..	294
Mahesha	..	295
Phulsar	..	296
Nischintapur	..	298
Gokulnagar	..	299
Par Kholabaria	..	328
Balakandi	..	329
Arjunpur	..	330
Aorail	..	331
Dakshinpur	..	327
Nabin Krishnapur	..	332
Balarampur	..	333
Kadim Saturia	..	334
Char Tebaria	..	335
Diar Saturia	..	336
Abdulpur	..	337
Haybatpur	..	338
Gazipur	..	339
Chowri	..	340
Lakshmipur Kholabaria	..	342
Ibrahimpur	..	343
Barabaria	..	345
Kanthalbaria	..	346
Darappur	..	347
Sekherhat	..	348
Basupara	..	349
Par Atgharia	..	344

Bara Harishpur union.

Lalmanipur	..	300
Bankuri	..	323
Rampur	..	324
Fatengapara	..	325
Makrampur	..	326
Khamardiar	..	305
Ramaigachhi	..	306
Narayankandi	..	307
Bihar	..	308
Bhabanipur	..	309
Bhita	..	202
Nator	..	204
Gunarigram	..	302
Bara Harispur	..	303
Sridharpur	..	304
Tengirhat Arazi	..	317
Tengirhat	..	318
Rajapur	..	319
Durgabaharpur	..	320
Rahimkuri	..	321

Names of mauzas constituting the unions with their numbers in the jurisdiction list		
Rajibpur	..	322
Paikerdoul	..	311
Teghari	..	312
Pirjipara	..	313
Rabirhat	..	314
Sundarpur	..	315
Dhalat	..	316
Rhishir Naogaon	..	341
Subadair	..	196
Mamudpara	..	350
Kafura union.		
Dastanabad	..	89
Kafura	..	107
Paikpara	..	108
Jayrampur	..	109
Arazi Paikpara	..	112
Baragharia	..	89/356
Kuripara	..	83
Chandpur	..	85
Matiapara	..	86
Chaugachhi	..	87
Narayanpara	..	88
Sultanpur	..	90
Chak Singardaha	..	81
Lotabaria	..	82
Hasimpur	..	91
Sadhupara	..	92
Mohanpur	..	95
Chandanpur	..	96
Birahimpur Arazi	..	97
Birahimpur	..	98
Jalalabad	..	99
Kasba	..	93
Nazarpur	..	94
Singra thana.		
Sukas union.		
Sukas	..	313
Chak Masinda	..	318
Masinda	..	319
Arjuni Madarbaria	..	317
Chhaoalpota	..	316
Srikhanda	..	315
Belgari	..	321
Kachugari	..	322
Chak Singra	..	323
Sarangbaria	..	324
Dhapkurail	..	325
Kuripakhiya	..	347
Adhkhola	..	228
Madalbaria	..	229
Purba Kalaikuri	..	231
Chhota Panchpakhiya	..	230
Kharajgari	..	232
Boalia	..	320
Biswaspur	..	314
Kasatiya	..	327
Salimpur	..	329
Dakshin Chahitpur	..	332
Amdakuri	..	328
Hat Mursun	..	326
Hanspukharia	..	330
Satakuri	..	335
Bibi Adhkhola	..	336
Palasia	..	337
Narayangari	..	339
Beloa	..	338
Binahar	..	380
Maria	..	379

Names of mauzas constituting the unions with their numbers in the jurisdiction list.		
Sukhangari	..	370
Sahapurgari	..	369
Nalpukuria	..	368
Jiapara	..	367
Agmursan	..	342
Khajurgari	..	341
Sonar Kumgaon	..	340
Kamalkuri	..	344
Dhursun	..	345
Bhuiya Masinda	..	346
Baruigari	..	227
Dakshin Sukhangari	..	226
Bankurail	..	224
Chak Ramkrishnapur	..	343
Lakshmikol	..	348
Chhota Lakshmikol	..	349
Gopalpur	..	350
Talgharia	..	352
Nischintapur	..	353
Joyakuri	..	225
Bagum	..	351
Tetuhabari	..	364
Sarupara	..	363
Durgapur	..	354
Chak Durgapur	..	355
Kochua	..	356
Kakian	..	362
Bamail	..	365
Maugaon	..	366
Dahia union.		
Dahia	..	646
Kusabari	..	645
Berabari	..	647
Khord Masigari	..	648
Kaua Tikri	..	676
Kritar	..	677
Jhina Berabari	..	649
Sarishabari	..	678
Kol Mirzapur	..	681
Deobhagi	..	680
Badi Parali	..	650
Garabari	..	674
Thenga Pakuria	..	679
Paril	..	675
Chhota Kholabaria	..	673
Ullabari	..	651
Barabaria	..	652
Kadamkuri	..	669
Maheslati	..	667
Ayes	..	670
Kalyangari	..	668
Bhaturia Jhina	..	653
Anantakuri	..	666
Muktakuri	..	654
Panchpakhia	..	665
Ichhalbaria	..	664
Para	..	663
Jot Byas	..	672
Lalua	..	671
Chhota Bansberia	..	473
Raghu Kadma	..	466
Kusta	..	464
Batgari	..	454
Nisindra	..	455
Bil Pakuria	..	456
Pakuriapara	..	457
Tarai	..	459
Eksing	..	460
Baragaon	..	461
Baraichara	..	462

Names of mauzas constituting the unions with their numbers in the jurisdiction list.		
Chhit Putigari	..	463
Musigari	..	465
Hatiandighi	..	467
Kayakasi	..	468
Bara Adimpur	..	471
Barabaria	..	469
Chak Aditya	..	470
Madha	..	472
Manik Chapar	..	451
Kanchi Bhadra	..	452
Paschim Bhengri	..	453
Purba Bhengri	..	361
Hatigara	..	360
Kaidala	..	359
Pipulsan	..	357
Kshirpota	..	358
Singra Jadunathpur	..	458

Itali union.

Sikichara	..	437
Pakuria	..	432
Gangarbaria	..	382
Kayakhas	..	374
Ram Tegharia	..	375
Hijli	..	441
Analia	..	378
Barpara	..	440
Latabaria	..	376
Deogachha	..	377
Chhota Adimpur	..	442
Maidighi	..	438
Paschim Kalaikuri	..	485
Chhattar	..	439
Ratal	..	371
Srikol	..	373
Ichhakuri	..	372
Purba Barabaria	..	484
Khamar Chandrakuri	..	499
Sachandighi	..	482
Itali	..	500
Bishnupur	..	501
Panch Tirail	..	502
Ag Tirail	..	503
Indrasan	..	504
Singragari	..	593
Paschim Magura	..	594
Purba Magura	..	595
Sasi	..	596
Tajpur	..	592
Satpukuria	..	597
Hijli	..	598
Mahishamura	..	655
Tilkuri	..	656
Langabari	..	657
Bangaon	..	658
Fulia	..	659
Sonapatil	..	662
Maguri	..	660
Bhasa	..	661
Dhamaijgari	..	475
Chhatua	..	474
Salmara	..	477
Haliabari	..	478
Munsi Bansbaria	..	480
Tulapara	..	481
Saguni	..	479
Lakshmikuri	..	445
Bara Kholabaria	..	444
Singa	..	446
Bikrampur	..	483
Barapara	..	443

Names of mauzas constituting the union with their numbers in the jurisdiction list.		
Burikadma	..	447
Bankuri	..	448
Kada	..	476
Kumgaon	..	450
Bakhanda	..	449

Kalam union.

Lakshmipur	..	599
Krishnapur	..	600
Kumarpara	..	601
Chandpur	..	602
Par Saoail	..	604
Pat Sawail	..	609
Jagatpur	..	623
Nazarpur	..	624
Chak Rampur	..	625
Pundari	..	626
Harina	..	638
Mirzapur	..	639
Hat Kadamtali	..	640
Surjyapur	..	641
Kalamnagarpara	..	642

Chamari union.

Chamari	..	619
Rudi	..	620
Sibpur	..	627
Bahadurpur	..	628
Rampur	..	629
Sonapur	..	630
Pangasia	..	637
Chak Kalikapur	..	631
Chak Balaram	..	632
Syamerkol	..	634
Chak Lanka	..	635
Raninagar	..	636
Chhota Kalikapur	..	633
Mahishmari	..	643
Bildaha	..	644

Hatiandaha union.

Uttar Sajura	..	548
Kazipura	..	549
Dakshin Sajura	..	550
Chak Pranpur	..	551
Pranpur	..	552
Chhota Hatiandaha	..	553
Bara Hatiandaha	..	554
Achalkot	..	555
Dighalgaon	..	556
Arkandi	..	557
Narayanpur	..	614
Dhuliadanga	..	615
Kaligaon	..	616
Gunaikhara	..	617
Salikhan	..	618
Larua	..	621
Bara Sawail	..	622

Lalor union.

Dakmandab	..	529
Hamirghosh	..	530
Bara Baraihati	..	531
Bangalpara	..	533
Mohanpur	..	534
Chhota Baraihati	..	535
Raksa	..	536
Uttar Dhakdhor	..	537

Names of mauzas constituting the unions with their numbers in the jurisdiction list.		
Kayalipukur	..	538
Uttar Dangapara	..	539
Dakshin Dhakdhor	..	540
Dakshin Dangapara	..	542
Hapania	..	543
Rambati	..	541
Bara Majhgaon	..	544
Churamanbati	..	545
Ataikula	..	546
Lalor	..	547
Chhota Belgharia	..	558
Majhgati	..	559
Neogigaon	..	560
Panch Tikri	..	561
Madarigaon	..	562
Matgram	..	613
Chhota Majhgaon	..	563
Bara Belgharia	..	612
Serkol union.		
Chhota Nagarkandi	..	409
Bara Nagarkandi	..	410
Bhag Nagarkandi	..	412
Sahabazpur	..	413
Kharamkuri	..	519
Bara Mabakuri	..	520
Dur Mallika	..	521
Chak Haripur	..	522
Chhota Mabakuri	..	523
Jor Mallika	..	524
Goalbathan	..	525
Chakpur	..	526
Siddhakhali	..	532
Bamanhat	..	565
Baktarpur	..	566
Teligaon	..	567
Serkol	..	564
Pamgaon	..	610
Panchberia	..	611
Bil Bharat	..	527
Krishnapur	..	528
Temukh	..	411
Singra union.		
Tin Bhiti	..	416
Chak Taiyab	..	417
Rakhalgachhi	..	419
Chhota Bazra	..	420
Bajrahar	..	421
Bara Bazra	..	422
Chahardari	..	491
Chhatarbari	..	492
Guakhara	..	493
Falia	..	494
Kayamanmatha	..	510
Dakshin Damdama	..	511
Paschim Masinda	..	512
Chhota Hanspukuria	..	513
Bara Hanspukuria	..	514
Bara Haripur	..	515
Chhota Haripur	..	516
Parchak	..	517
Chak Hayatpur	..	518
Ningain	..	568
Paranhati	..	569
Purba Masinda	..	570
Balubhara	..	608
Uttar Damdama	..	571
Chak Gopal	..	572
Kata Pukuria	..	573

Names of mauzas constituting the unions with their numbers in the jurisdiction list.		
Hat Singra	..	574
Par Singra	..	575
Balua	..	576
Singra	..	577
Aukuri	..	578
Chak Singra	..	579
Solakuri	..	580
Bara Maguri	..	581
Chhota Maguri	..	582
Basta	..	583
Basua	..	584
Satakuri	..	585
Sarabari	..	586
Debatra Sarabari	..	587
Saharbari	..	588
Palangi	..	589
Kayarabari	..	590
Dhepargari	..	591
Paltibari	..	603
Kutuabari	..	605
Sohagbari	..	606
Patkol	..	607
Sahabazpur	..	404
Tajpur	..	405
Naogaon	..	406
Karsati	..	407
Chak Naogaon	..	408
Bhaduripara	..	414
Mahamudpur	..	415
Chak Kadirgachhi	..	418
Chaugaon union.		
Nima Kadma	..	396
Sukul Binnabari	..	423
Bara Bishnupur	..	424
Majhipara Sibpur	..	425
Mariapara	..	426
Nayapara	..	427
Kasba	..	428
Terabaria	..	429
Phatikahar	..	430
Kajlahar	..	431
Tengarkuri	..	486
Panruhar	..	487
Belgharia	..	488
Chaugaon	..	489
Khorda Chaugram	..	490
Hiala	..	495
Pambaria	..	496
Khidirbaria	..	497
Baria	..	498
Khanerbari	..	505
Deabaria	..	506
Kantanagar	..	507
Kaidighi	..	508
Mulkuri	..	509
Khayerbari	..	392
Goalbaria	..	394
Thapandighi	..	395
Mushtigar	..	279
Sriballabhpur	..	398
Panrara	..	397
Paschim Barabaria	..	399
Kusumbi Panisail	..	400
Hulhulia	..	401
Chaugram Panisail	..	402
Kusumbi Binnabari	..	403
Chhatardighi union.		
Bhulbaria	..	277
Hosenpur	..	127

Names of mauzas constituting the unions with their numbers in the jurisdiction list.		
Naina Kumaria	..	278
Eklaspur	..	276
Sitlai	..	275
Upar Kumaria	..	274
Saidpur	..	273
Paota	..	272
Paschim Bansbaria	..	271
Banamara	..	270
Nikhira	..	269
Pakisa	..	130
Ikarkuri	..	128
Chhatarbaria	..	129
Brahman Chak	..	126
Karachmaria	..	123
Damkuri	..	125
Pania	..	122
Balaram Kundi	..	124
Chhatardighi	..	120
Srikhola	..	102
Barabaria Ramnagar	..	103
Rudrabaria	..	119
Bhar Bargachha	..	121
Palsa	..	131
Udisa	..	284
Sarmoja	..	282
Paota Belgharia	..	281
Jhina	..	280
Khorda Kaya	..	283

Choupukuria union.

Thalkuri	..	265
Talhara	..	192
Malipara	..	195
Ekdiltala	..	196
Paschim Kuchaikuri	..	193
Harini	..	194
Gouripara	..	267
Badapara	..	188
Mankur	..	189
Ramchandrapur	..	190
Deula	..	199
Puthia	..	142
Thelkur	..	143
Hanpania	..	187
Paschim Ekdala	..	257
Manik Chapra	..	258
Bara Panchpakhia	..	259
Belta	..	256
Bankuri	..	287
Dhulabari	..	264
Bamanbaria	..	260
Paikpahari	..	262
Byaspara	..	299
Rudrabari	..	301
Goalipara	..	288
Bigalgalia	..	263
Tentulbaria	..	261
Upania	..	298
Sanjugari	..	296
Ramananda Khajura	..	294
Kukurgari	..	295
Sajuria	..	389
Pallagari	..	390
Bhoga	..	391
Galgalia	..	293
Saktikuri	..	292
Pausha Kadma	..	291
Begunbaria	..	290
Jhingabari	..	289
Brikaya	..	285
Tegharia	..	286

Names of mauzas constituting the unions with their numbers in the jurisdiction list.		
Choupukuria	..	266
Kosabari	..	268
Soair	..	393
Alolia	..	297
Kaigaon	..	386
Kayadom	..	388
Kayapara	..	387
Majagari	..	434
Chara	..	433
Sailagari	..	435
Damdighi	..	436
Dopukharia	..	384
Bingaon	..	383
Nurpur	..	381

Nandigram thana.

Burail union.

Bhadradighi	..	214
Basantagari	..	246
Sidhail	..	245
Uttar Sukhangari	..	244
Paralia	..	243
Dasgaon	..	242
Purba Bansbaria	..	239
Chandipur	..	238
Baraichara	..	237
Purba Ekdala	..	240
Apusagari	..	241
Chak Deola	..	236
Gunbari	..	220
Chak Ratneswar	..	222
Tulasan	..	221
Dhudar	..	235
Singjani	..	164
Nundaha	..	165
Khengsar	..	166
Dola Singra	..	167
Chak Rampur	..	168
Muradpur	..	169
Pauta	..	170
Chakran Adhkhola	..	171
Kamla	..	172
Ailpona	..	173
Teghari	..	212
Kahali	..	213
Kayerpara	..	216
Burail	..	215
Birpali	..	217
Chapilapara	..	218
Sarishabad	..	219
Chak Ramdebpur	..	210
Dohar	..	211
Ridhail	..	208
Singra Khalas	..	209
Maria	..	233
Peng	..	234
Hazarkipara	..	223

Nandigram union.

Bailgram Arazi	..	181
Gochhan	..	197
Tisipara	..	198
Chhota Derahar	..	200
Derahar	..	201
Bazeapti Bailgram	..	202
Bailgram	..	203
Nandigram	..	204
Bhaturiapara	..	205
Phukpal	..	247
Kalikapur	..	248

Names of mauzas constituting the unions with their numbers in the jurisdiction list.

Purba Kuchaikuri	..	249
Bishnupur	..	250
Omarpur	..	251
Kadma	..	252
Bhadam	..	253
Isabpur	..	254
Hatnar	..	255
Madhukuri	..	300
Mathurapur	..	302
Datmanik	..	303
Kostha	..	304
Kasimalkuri	..	305
Simulkuchi	..	306
Kaidala	..	307
Teghari	..	308
Bejoyghat	..	309
Gandail	..	310
Hatua	..	311
Alaipur	..	312
Uttar Chahitpur	..	331
Saharkuri	..	333
Ranbagha	..	334
Kaigari	..	385
Majhgram Barindra	..	206
Damgara Daulat	..	207
Dhakar	..	178
Namut	..	179
Belgharia	..	180
Dalgachha	..	182
Uttar Kachugari	..	183
Khorda Simla	..	184
Bhag Simla	..	185
Bhabanipur	..	186
Kamalkuri	..	146
Taratia	..	147
Amgachhi	..	155
Jhalgharia	..	156
Bhar Pakuriapara	..	157
Duba Teghari	..	158
Dighirpar	..	159
Patgari	..	154
Panchgaon	..	153

Bhatra union.

Matihas	..	82
Mahakuri	..	84
Thakurai	..	85
Hat Dhuma	..	92
Gramdhuma	..	93
Chak Namat	..	94
Phechka	..	95
Brikanchi	..	96
Kabipara	..	104
Kumaria	..	108
Salukha	..	109
Jhina	..	110
Dopukuria	..	111
Damgara	..	112
Ramkrishnapur	..	113
Chaudighi	..	114
Maria	..	115
Durjaypur	..	116
Maninag	..	117
Rupihar	..	118
Tentulia Bhar	..	132
Adhkhola	..	133
Kshidra Damgara	..	134
Belgharia	..	135
Naipara	..	136
Kalipara	..	137
Chala	..	138

Names of mauzas constituting the unions with their numbers in the jurisdiction list.

Bamangaon	..	139
Bhag Bajar	..	140
Bilsa	..	141
Dhakarpara	..	144
Mirzapur	..	145
Bhatra	..	148
Ranja Teghar	..	149
Nagra	..	150
Kharna	..	151
Kuldighi	..	152
Majhgram Bhar	..	191
Bishnupur	..	76
Nagarkandi	..	77
Mulkuri	..	78
Umapatidighi	..	79
Rostompur	..	80
Kosas	..	81
Baruipara	..	97
Serankuri	..	98
Muraridighi	..	99
Dohabari	..	100
Damdama	..	101
Madhabkuri	..	105
Anchalta	..	106
Paikarkuri	..	107

Thalta Majhgram union.

Bagadaha	..	1
Parsan	..	2
Jamalpur	..	3
Banagram	..	4
Atan	..	5
Andhasura	..	6
Bisherpara	..	7
Achuapara	..	8
Saradigar	..	9
Chandangari	..	10
Nimaidighi	..	11
Pathan	..	12
Pathan Mirzapur	..	13
Batdighi	..	14
Garia	..	15
Agapur	..	16
Chak Majhgram	..	17
Sibbati	..	18
Teghari Mula	..	19
Barihatta	..	20
Panchughari	..	21
Barindra Bargachha	..	22
Muchughari	..	27
Thalta	..	28
Thalta Majhgram	..	29
Bhadra	..	30
Nisindara	..	31
Bara Changair	..	32
Maikuri	..	33
Dhoas	..	34
Talgachhi	..	35
Betkuri	..	36
Kala Singa	..	37
Narayanpur	..	38
Dariapur	..	39
Haldihari	..	40
Kayarpara	..	59
Amra Kismat	..	60
Jagadispur	..	61
Gohal	..	62
Baniakola	..	63
Banso	..	64
Bhebarkuri	..	65
Chhota Changair	..	66

Names of mauzas constituting the unions with their numbers in the jurisdiction list.

Jonka	..	67
Kochkuri	..	68
Harihara	..	69
Chandpur	..	70
Chak Kaya	..	71
Taiyabpur	..	72
Chaugaon Madhukari	..	73
Gopalpur	..	74
Gulia Krishnapur	..	75

Bhatgram union.

Nandanbari	..	23
Nushkur	..	24
Bhushkur	..	25
Pali	..	26
Raypur	..	41
Atihari	..	42
Bansbaria	..	43
Damrul	..	44
Daniagari	..	45
Chak Bizrul	..	46
Bizrul	..	47
Gachhail	..	48
Kalaichapar	..	49
Kuchma	..	50
Arazi Bizrul	..	51
Chamta	..	52
Barindra Pakuriapara	..	53
Barshan	..	54
Krishnapur	..	55
Potapara	..	57
Deota	..	86
Punail	..	87
Kalis	..	88
Badlasan	..	160
Ningaon	..	162
Bisha	..	163
Bhatgram	..	174
Nizamatkuri	..	175
Khariapukur	..	176
Katham	..	177
Chakalma	..	161
Chenchuapara	..	89
Kalyannagar	..	90
Malancha	..	91
Hat Karai	..	56
Chak Karai	..	58
Malanchi	..	83

Baraigram thana.

Joari union.

Kaidimi	..	25
Naopara	..	26
Balia	..	27
Ahamadpur	..	28
Kaemkola	..	29
Kachuakora	..	30
Kella	..	66
Mirzapur	..	67
Joari	..	68
Bri Kanchutia	..	31
Khord Nanda	..	32
Khord Kanchutia	..	33
Kumullo	..	34
Kamardaha	..	35
Kataskol	..	41
Kalikapur	..	42
Ramaigari	..	36
Atghari	..	37
Bhabanipur	..	38
Srikhandi	..	39
Arazi Bhabanipur	..	40

Names of mauzas constituting the unions with their numbers in the jurisdiction list.

Bariagram union.

Baraigram	..	60
Lakshmipur	..	61
Binodsaha	..	62
Bishnupur	..	63
Maukhara	..	64
Goalpha	..	65
Upalsahar	..	100
Khas Khamar	..	101
Lakshmikol	..	113
Chak Baraigram	..	114
Jalanda	..	116
Mahanandagachha Arazi	..	117
Baraigram Arazi	..	118
Bharatpur	..	133
Ikri	..	109
Jalsuka	..	110
Rayna	..	112
Maria	..	111
Nischintapur	..	99
Ramkantapur	..	103
Rajapur	..	102
Mahammadpur	..	134
Rolbha	..	135
Taranagar	..	137
Dighalkandi	..	188
Khaksa Khoksa	..	189
Bagdob	..	190
Sarishahat	..	136
Srirampur	..	138
Pratappur	..	185
Syampur	..	186
Rameswarpur	..	187
Chandipur	..	191
Piobhag	..	198
Adgaon	..	199

Jonail union.

Durgapur	..	193
Chamta	..	194
Chandpur	..	195
Borni	..	196
Jonail	..	197
Chaumohan	..	244
Daspakhia	..	250
Kusmail	..	251
Dighair	..	252
Char Gobindapur	..	253
Sarabaria	..	254
Manoir	..	255
Sangrampur	..	256
Dwarikusi	..	184
Chak Badal	..	192

Nagar union.

Kumarkhali	..	200
Pingal	..	201
Bardaha	..	202
Khidar Atai	..	203
Khanaikhara	..	236
Nagar	..	237
Atai	..	238
Kursal	..	239
Helancha	..	240
Kursal Arazee	..	241
Damaipur	..	242
Mianpur	..	243
Gopalpur	..	115
Manperi	..	126

Names of mauzas constituting the unions with their numbers in the jurisdiction list.		
Lakshmi Chamari	..	127
Kojayel	..	128
Mahanandagachha	..	129
Baghat	..	130
Batra	..	131
Talso	..	132
Jalla	..	204
Merigachhi	..	205
Dogachhi	..	206
Masinda	..	207
Kanthalbaria	..	208
Makimpur	..	209
Panchbaria	..	212
Mahespur	..	214
Dhantala	..	217
Parkol	..	218
Brahmottar Gopalpur	..	219
Par Gopalpur	..	220
Kayan	..	210
Dhanaidaha	..	211
Jaindighi	..	213
Darikhair	..	215
Majhgaon union.		
Natabaria	..	43
Mahishbhanga	..	44
Atua	..	53
Rathuria	..	54
Khetkhair	..	55
Tirail	..	56
Nyangtadaha	..	57
Chak Tirail	..	58
Agran	..	59
Parkol	..	119
Bil Chinidanga	..	120
Diarpara	..	45
Banpara	..	46
Harua	..	47
Baimal	..	48
Manikpur	..	49
Chhatingachha	..	50
Nij Gunihati	..	51
Malipara Gunihati	..	52
Bil Dobala	..	121
Gurumsail	..	122
Majhgaon	..	123
Madhaimuri	..	124
Dhulia	..	125
Gopalpur union.		
Deosin	..	216
Dasgaon	..	231
Naogaon	..	233
Deogaon	..	234
Krishnapur	..	235
Telo	..	230
Santool	..	245
Chandai	..	246
Bhandardaha	..	247
Diar Garfa	..	248
Garfa	..	249
Garmati Ranibari	..	221
Kachua	..	222
Gosainpur	..	223
Purnakalas	..	224
Sibpur	..	225
Narayanpur	..	226
Astikpara	..	227
Raota	..	228
Natabaria	..	229
Gopalpur	..	232
Duaria union.		
Naodara	..	267
Sekhchilan	..	268
Dhala	..	269

Names of mauzas constituting the unions with their numbers in the jurisdiction list.		
Godhara	..	270
Choshdanga	..	271
Belgachhi	..	272
Kadimchilan	..	273
Dangapara	..	274
Ghatchilan	..	276
Panghata	..	277
Chandpur	..	275
Bhabanipur	..	278
Palahar	..	279
Hosenpur	..	280
Kalasnagar	..	281
Satpukuria	..	287
Duaria	..	288
Maheswar	..	289
Titia	..	295
Sundarbaria	..	294
Raksha	..	293
Durgapur	..	290
Ahammadpur	..	286
Dhanaidahapara	..	291
Kujipukur	..	285
Ramkantapur	..	292
Majgaon	..	296
Walia union.		
Sibpur	..	261
Mayna	..	263
Bamangaon	..	264
Bibhag	..	283
Ruhigari	..	284
Dalua	..	282
Nanda	..	265
Raypur	..	266
Gopalpur	..	260
Walia	..	262
Dilalpur	..	259
Dhupail	..	257/37
Phulbari	..	258
Gurudaspur thana.		
Nazirpur union.		
Syampur	..	1
Chandrapur	..	2
Tikri	..	3
Hat Halsa Arazi	..	4
Panch Purula	..	5
Chak Ramballabh	..	6
Ag Purula	..	7
Chak Gopal	..	8
Raninagar	..	79
Debottar Garila	..	80
Dubarpara	..	81
Imdarpara	..	82
Chak Aladadkhan	..	83
Lakshmipara	..	84
Chak Nandaram	..	85
Brindabanpur	..	86
Kusumhati	..	77
Bri-Garila	..	78
Gopinathpur	..	87
Dudhgari	..	88
Bri-Kaso	..	95
Nazirpur	..	89
Ber-Gangarampur	..	94
Mamudpur	..	92
Jumainagar	..	93
Biaghat union.		
Dastananagar	..	91
Kumarkhali	..	90
Biaghat	..	147
Bil Haribari	..	148
Durgapur	..	149

Names of mauzas constituting the unions with their numbers in the jurisdiction list.		
Jnanadanagar	..	150
Jogendranagar	..	158
Kharibari	..	159
Balsa	..	160
Rohi	..	161
Arazi Brahmanbaria	..	162
Pipalia	..	163
Sripur	..	164
Brahmanbaria	..	165
Khugjipur	..	166
Telkupi	..	157
Gurudaspur union.		
Panchsisa	..	141
Naribari Dakshinpara	..	142
Binnabari	..	143
Naribari Uttarpara	..	144
Hamlaikol	..	145
Par Gurudaspur	..	152
Khamar Nachkair	..	154
Chanchkair	..	155
Narayanpur	..	146
Haulbari	..	151
Kalakandar	..	156
Gurudaspur	..	153
Masinda union.		
Masinda	..	169
Bil Kathor	..	170
Bil Byaspur	..	171
Ranigram	..	172
Dari Kachhikata	..	173
Dari Bamangara	..	174
Kachhikata	..	175
Bamangara	..	176
Dari Hansmari	..	177
Hansmari	..	178
Sahapur	..	167
Bamankola	..	168
Dharabarisha union.		
Chalanali	..	140
Charkadaha	..	180
Daudia Talbari	..	179
Udbaria	..	181
Dharabarisha	..	182
Khakradaha	..	183
Jhakra	..	104
Santoshpur	..	105
Palsura	..	106
Sonabaju	..	107
Palsura Arazi	..	108
Sidhali	..	139
Chapila union.		
Maharajpur	..	9
Khidir Garila	..	10
Pampathuria	..	11
Paikpara	..	17
Naopara	..	71
Khamar Pathuria	..	72
Pabanali	..	73
Teltupi	..	74
Chak Kantaram	..	75
Bri-Pathuria	..	76
Putimari	..	96
Rasidpur	..	97
Raosanpur	..	98
Bakibegpur	..	12
Sadhupara	..	13
Khidir Chapila	..	14
Acharjya Chapila	..	15
Gajendra Chapila	..	16
Dhanura	..	18
Bri Chapila	..	19

Names of mauzas constituting the unions with their numbers in the jurisdiction list.		
Kola	..	20
Brahmottar Kola	..	21
Chak Dighali	..	22
Kantanagar	..	23
Chala	..	24
Kandail	..	69
Alipur	..	70
Lalpur thana.		
Lalpur union.		
Biswambharpur	..	39
Chak Serpara	..	96
Maminpur	..	97
Madhabpur	..	98
Gopalpur	..	99
Krishnapur	..	100
Chak Badekulpara	..	101
Hansli	..	102
Gobindapur	..	92
Lalchandpara	..	93
Santoshpur	..	103
Balitita	..	198
Baknai	..	199
Bandobasti Gobindapur	..	200
Ramanandapur	..	104
Jot Daibaki	..	105
Paschim Debarpara	..	109
Purba Debarpara	..	113
Budhrampur	..	110
Lalpur	..	197
Mahadiar	..	205
Diar Bahadurpur	..	206
Char Jazira	..	205 208
Budhpara	..	108
Iswardi union.		
Kazipara	..	111
Mahishbathan	..	112
Chamtia	..	118
Bhatpara	..	117
Manikhar	..	120
Chak Bansi	..	183
Nurullapur	..	193
Kulchara Lakshmipur	..	194
Tilakpur	..	195
Nangla	..	196
Chhota Palidaha	..	184
Dahar Saila	..	186
Simulchara	..	187
Iswardi	..	188
Jokadaha	..	189
Sadipur	..	190
Bara Palidaha	..	191
Gauripur	..	192
Danrpara	..	121
Saleswar	..	143
Baramhati	..	144
Bhabanipur	..	145
Patikabari	..	177
Arjunpur	..	178
Sankail	..	179
Angaripara	..	180
Syampur	..	181
Rameswarpur	..	182
Chaug Dhupail union.		
Kulpara	..	106
Nengapara	..	130
Iswarpara	..	129
Sirazipur	..	128
Dakshin Bansbaria	..	131
Uttar Bansbaria	..	132

Names of mauzas constituting the unions with their numbers in the jurisdiction list.		
Baora	..	133
Narendrapur	..	114
Baidyanathpur	..	115
Berupara	..	116
Mahishkhola	..	119
Madhubari	..	125
Kalupara	..	122
Bahadipur	..	127
Narayanpur	..	126
Bishnupur	..	134
Gabarpur	..	107
Tarapur	..	74
Abdulpur	..	135
Chang Dhupail	..	136
Chak Kamarhati	..	66
Kamarhati	..	67
Nabirpara	..	68
Delua	..	69
Sobh	..	70
Karimpur	..	71
Dhananjaypara	..	72
Chak Sobh	..	73
Gosainpur	..	75
Kanthalbaria	..	77
Pokanda	..	78
Arbab union.		
Kachua	..	90
Andi	..	94
Sainpara	..	95
Chak Sainpara	..	64
Barabaria	..	76
Arbab	..	79
Chikadaha	..	80
Kesabbaria	..	81
Sundargara	..	88
Arjunpara	..	91
Jot Ramnath	..	3
Boaliapara	..	4
Mordaha	..	48
Bil Tonapara	..	49
Chak Boaliapara	..	50
Sadhupara	..	51
Hasimpur	..	52
Lakshmanbaria	..	60
Dharbila	..	61
Chak Hansbaria	..	62
Selampur	..	63
Hansbaria	..	65
Ghat Mordaha	..	58
Paschim Panchubaria	..	59
Purba Panchubaria	..	57
Bara Serpara	..	83
Sobhanpur	..	56
Chhota Bahadurpur	..	84
Chhota Pukurpar	..	85
Chhota Dhushpara	..	53
Jot Sultan	..	54
Bara Bahadurpur	..	55
Bara Pukurpar	..	86
Chhota Serpara	..	82
Arazi Sultan	..	87
Amritapara	..	40
Habidpur	..	41
Krishnarampur	..	42
Bara Dhushpara	..	43
Akbarpur	..	44
Raghunathpur	..	45
Naodapara	..	89
Bilmaria union.		
Udhanpara	..	24
Rahimpur	..	25
Bara Badekaya	..	26
Chak Nur Muhammad	..	27

Names of mauzas constituting the unions with their numbers in the jurisdiction list.		
Nagarkaya	..	28
Kalupara	..	22
Chhota Badekaya	..	29
Kazipara	..	30
Chak Badekaya	..	38
Maharajpur	..	35
Nagsasa	..	36
Bil Maria	..	37
Moharkaya	..	202
Diar Sankarpur	..	203
Arazi Baknai	..	202 / 207
Rasulpur	..	201
Mollapara	..	1
Radhakantapur	..	2
Arazi Radhakantapur	..	5
Arazi Gokhurabad	..	6
Jayrampur	..	7
Rampara	..	8
Mianpur	..	9
Berilabari	..	10
Jaypur	..	11
Gokhurabad	..	12
Khas Jaypur	..	13
Artika	..	14
Basantapur	..	15
Radhakrishnapur	..	16
Mirzapur	..	17
Amarpur	..	18
Jot Gauri	..	20
Gandabil	..	21
Paikpara	..	23
Bidirpur	..	46
Jaykrishnapur	..	47
Ramkrishnapur	..	31
Naopara	..	32
Pansipara	..	33
Fatehpur	..	34
Durduria	..	19
Sekendarpur	..	213
Nutanchar No. 2	..	210
Chakla Binodpur	..	214
Naosara Sultanpur	..	209 / 204
Mulluk Chandpur	..	211
Khas Mahal Nutanchar	..	212
Bagatipara thana.		
Panka union.		
Salainagar	..	150
Panka	..	151
Makupara	..	152
Rampara	..	153
Astikpara	..	154
Takinagar	..	149
Salaipara	..	155
Chak Goas	..	144
Chak Takinagar	..	145
Begunia	..	140
Krishnapur	..	141
Parkuthi	..	142
Galimpur	..	143
Maria	..	165
Swarabpur	..	157
Gaopara	..	156
Maligachhi	..	158
Chak Mahapur	..	159
Pratappur	..	160
Dodangi	..	164
Chitholia	..	163
Nazirpur	..	162
Khatkhair	..	161

Names of mauzas constituting the unions with their numbers in the jurisdiction list		
Jamnagar union.		
Dakarmaria	..	100
Bajrapur	..	101
Khamar Bajrapur	..	102
Chak Bansbaria	..	103
Arazi Jalalpur	..	104
Kalikapur	..	105
Champapukur	..	106
Karamdasi	..	110
Bhitarbhag	..	111
Meri	..	113
Jamnagar	..	116
Hapania	..	115
Chaipara	..	114
Bansbaria	..	117
Jalalpur	..	118
Bajitpur	..	119
Rahimanpur	..	120
Amlagachhi	..	121
Bajrapur Arazi	..	124
Jamalpur	..	125
Bagatipara union.		
Nurpur	..	122
Khondakar Malanchi	..	147
Mallikpur	..	148
Kazir Chak	..	146
Kuthi Bansbaria	..	123
Khidir Malanchi	..	126
Chak Harirampur	..	138
Jiarkol	..	127
Kakpho	..	192
Basupara	..	128
Jigari	..	129
Srirampur	..	130
Bil Gopalhati	..	136
Harirampur	..	137
Saja Malanchi	..	139
Bagatipara	..	135
Jogipara	..	170
Barapukuria	..	172
Machhimpur	..	171
Baraipara	..	169
Biharkol	..	168
Sonapatil	..	173
Maria Arazi	..	166
Perabaria	..	174
Muradpur	..	176
Tunipara	..	177
Lakshmanhati	..	175
Ghorlas	..	167
Gauripur	..	131
Thengamari Gazipur	..	133
Chak Gazipur	..	134
Dayarampur union.		
Jayantipur	..	179
Batikamari	..	180
Misripara	..	181
Bhatkuja	..	182
Dayarampur	..	183
Nandakuja	..	184
Dumrai	..	185
Hijli	..	186
Madhabbaria	..	351
Sekhpara	..	352
Hat Gobindapur	..	353
Chandrakhair	..	354
Chimnapur	..	178
Kamarpara	..	132
Kalabaria	..	187
Salkona	..	189
Satsail	..	190
Hardoul	..	191
Pachuria	..	188

Calcutta.—No. 3272M.—24th August 1931.—Whereas Dr. Narain Chandra Roy having been elected a Councillor of the Corporation of Calcutta has subsequently become subject to the disability stated in sub-section (2) of section 22 of the Calcutta Municipal Act, 1923 (Bengal Act III of 1923), that is, has been convicted by Commissioners appointed under the Bengal Criminal Law Amendment Act, 1925, for an offence involving moral turpitude and carrying with it a sentence of transportation or imprisonment for a period of more than six months:

Now, therefore, in exercise of the power conferred by section 41 of the Calcutta Municipal Act, 1923 (Bengal Act III of 1923), the Government of Bengal (Ministry of Local Self-Government) are pleased to declare the seat of the said Dr. Narain Chandra Roy as Councillor of the said Corporation to be vacant.

Medical.

Minister-in-charge: The Hon'ble Mr. Bijoy Prasad Singh Roy.

Rajshahi.—No. 2554Medl.—19th August 1931.—Khan Sahib Dr. Fazlur Rahman Khan on expiry of leave is posted to the Nator subdivision and dispensary in the district of Rajshahi.

Calcutta.—No. 2572Medl.—20th August 1931.—Dr. Harendra Nath Basu (Captain, A. I. R. O.), on reversion from the Eastern Bengal Railway, has been placed on supernumerary duty at the Medical College Hospitals, with effect from the 19th July 1931.

Bankura.—No. 2574Medl.—20th August 1931.—Dr. Aghore Nath Ghose, officiating Civil Surgeon, Bankura, was granted privilege leave for fifteen days, under article 260 of the Civil Service Regulations, with effect from the 23rd July 1931.

C. W. GURNER,
Secy. to the Govt. of Bengal.

EDUCATION DEPARTMENT.

NOTIFICATIONS.

Minister-in-charge: The Hon'ble Mr. K. Nazim-ud-Din, C.I.E.

Bakarganj.—No. 2270Edn.—20th August 1931.—Babu Dwarka Nath Mazumdar, officiating Subdivisional Inspector of Schools, Barisal Sadar, is appointed to act temporarily in the Bengal Educational Service as District Inspector of Schools, Bakarganj, with effect from the date on which he joins the appointment, during the absence, on deputation, of Maulvi Aftabuddin Ahmad.

Calcutta. — No. 2278Edn. — 20th August 1931.—The Government of Bengal (Ministry of Education) are pleased to reappoint Babu Ramendra Nath Chakravarty, Head Assistant Teacher of the Government School of Art, Calcutta, as the representative of the teaching staff on the Governing Body of that Institution for the session 1931-32.

Jalpaiguri-Calcutta.—No. 2281Edn.—20th August 1931.—Mr. Manmatha Nath Kar, Subdivisional Inspector of Schools, Jalpaiguri Sadar, is appointed to act in the Bengal Educational Service as District Inspector of Schools, Calcutta, with effect from the date on which he joins the appointment, *vice* Mr. Satish Chandra Basu, on deputation, or until further orders.

Nadia.—No. 2284Edn.—20th August 1931.—Babu Chintaharan Banarji, officiating Lecturer in English, Krishnagar College, is appointed to act as Professor of English in that College, on his own pay in the Bengal Educational Service, with effect from the date on which he assumes the duties of the post, during the absence, on leave, of Babu Basanta Kumar Ray, or until further orders.

Nadia.—No. 2285Edn.—20th August 1931.—Babu Satya Charan Kahali, Lecturer, Krishnagar College, in the Subordinate Educational Service, is appointed to act in the Bengal Educational Service, during the absence, on deputation, of Babu Chintaharan Banarji, or until further orders.

Hooghly.—No. 2306Edn. — 22nd August 1931.—Babu Hem Chandra Sen Gupta, Professor of Mathematics, Hooghly College, is appointed to act, until further orders, as Vice-Principal of the College, on his own pay in the Bengal Educational Service and in addition to his own duties, with effect from the 3rd August 1931, or any subsequent date on which he assumes the duties of the post.

Calcutta. — No. 2308Edn.—22nd August 1931.—The Government of Bengal (Ministry of Education) are pleased to appoint Babu Charu Chandra Bhattacharyya, M.A., Demonstrator, Physics Department, Presidency College, Calcutta, to be a member of the Governing Body of that College, as an elected representative of the staff, for the remainder of the academic session 1931-32, *vice* Mr. Rajendra Nath Sen, M.A., M.Sc. (Leeds.), transferred.

Dacca.—No. 2311Edn.—22nd August 1931.—The Government of Bengal (Ministry of Education) are pleased to appoint the Vice-Chancellor, Dacca University, to be a member (*ex-officio*) of the Governing Body of the Dacca Intermediate College, constituted in notification No. 372T.Edn., dated the 7th May 1929, for the remainder of its term, *vice* Mr. G. H. Langley.

Registration.

NOTIFICATIONS.

Minister-in-charge: The Hon'ble Mr. K. Nazim-ud-Din, C.I.E.

Nadia.—No. 690Regn.—19th August 1931.—In exercise of the power conferred by section 3 of the Bengal Muhammadan Marriages and Divorces Registration Act, 1876 (Bengal Act I of 1876), the Government of Bengal (Ministry of Education) are pleased to appoint Maulvi Garibullah temporarily to be a Muhammadan Registrar within the police-station of Santipur, in the district of Nadia, during the absence, on leave, of Maulvi Md. Abdul Ghani, or until further orders.

Nadia.—No. 691Regn.—19th August 1931.—In exercise of the power conferred by section 2 of the Kazis' Act, 1880 (Act XII of 1880), the Government of Bengal (Ministry of Education) are pleased to appoint Maulvi Garibullah temporarily to be the Kazi for the celebration of marriages and the performance of other rites and ceremonies within the police-station of Santipur, in the district of Nadia, during the absence, on leave, of Maulvi Md. Abdul Ghani, or until further orders.

Pabna.—No. 696Regn.—19th August 1931.—In exercise of the power conferred by section 3 of the Bengal Muhammadan Marriages and Divorces Registration Act, 1876 (Bengal Act I of 1876), the Government of Bengal (Ministry of Education) are pleased to appoint Maulvi Serajul Haq, Muhammadan Registrar of Shahzadpur, temporarily to be a Muhammadan Registrar within the police-station of Belkuchi, in the district of Pabna, in addition to his own duties.

Pabna.—No. 697Regn.—19th August 1931.—In exercise of the power conferred by section 2 of the Kazis' Act, 1880 (Act XII of 1880), the Government of Bengal (Ministry of Education) are pleased to appoint Maulvi Serajul Haq, Kazi of Shahzadpur, temporarily to be the Kazi for the celebration of marriages and the performance of other rites and ceremonies within the police-station of Belkuchi, in the district of Pabna, in addition to his own duties.

Bakarganj.—No. 707Regn.—19th August 1931.—It is notified for general information that the Government of Bengal (Ministry of Education) are pleased to sanction the retention, for a further period of six months, with effect from the 2nd July 1931, of the office of the Joint Sub-Registrar of Gournadi at Bamrail, in the district of Bakarganj.

Bakarganj.—No. 711Regn.—19th August 1931.—It is notified for general information that the Government of Bengal (Ministry of Education) are pleased to sanction the retention, for a further period of six months, with effect from 1st August 1931, of the office of the Joint Sub-Registrar of Amtali at Barguna, in the district of Bakarganj.

Rangpur.—No. 713Regn. — 21st August 1931.—In exercise of the power conferred by section 3 of the Bengal Muhammadan Marriages and Divorces Registration Act, 1876 (Bengal Act I of 1876), the Government of Bengal (Ministry of Education) are pleased to appoint Maulvi Saiyid Emazuddin temporarily to be a Muhammadan Registrar within the police-station of Bhurangamari, in the district of Rangpur, during the absence, on leave, of Maulvi Saiyid Nurul Huq, or until further orders.

Rangpur.—No. 714Regn. — 21st August 1931.—In exercise of the power conferred by section 2 of the Kazis' Act, 1880 (Act XII of 1880), the Government of Bengal (Ministry of Education) are pleased to appoint Maulvi Saiyid Emazuddin temporarily to be the Kazi for the celebration of marriages and the performance of other rites and ceremonies within the police-station of Bhuranganari, in the district of Rangpur, during the absence, on leave, of Maulvi Saiyid Nurul Huq, or until further orders.

24-Parganas.—No. 719Regn.—21st August 1931.—In exercise of the power conferred by section 3 of the Bengal Muhammadan Marriages and Divorces Registration Act, 1876 (Bengal Act I of 1876), the Government of Bengal (Ministry of Education) are pleased to appoint Maulvi Muhammad Yusuf, Muhammadan Registrar of Naihati, temporarily to be a Muhammadan Registrar within the police-station of Bijpur, in the district of the 24-Parganas, in addition to his own duties.

24-Parganas.—No. 720Regn.—21st August 1931.—In exercise of the power conferred by section 2 of the Kazis' Act, 1880 (Act XII of 1880), the Government of Bengal (Ministry of Education) are pleased to appoint Maulvi Muhammad Yusuf, Kazi of Naihati, temporarily to be the Kazi for the celebration of marriages and the performance of other rites and ceremonies within the police-station of Bijpur, in the district of the 24-Parganas, in addition to his own duties.

A. J. DASH,
Secy. to the Govt. of Bengal.

Orders by the Director of Public Instruction, Bengal.

BENGAL EDUCATIONAL SERVICE

Calcutta.—No. 26B.—14th August 1931.—Babu Nilmani Chakrabarti, Professor, Presidency College, Calcutta, in the Bengal Educational Service, is granted, in terms of the proviso to rules 81 (*b*) (*ii*) and 82 (*b*) of the Fundamental Rules, leave on average pay, on medical certificate, for the period from 6th July 1931 to 10th October 1931.

2. He is permitted to prefix to his leave Sunday, the 5th July 1931, and to affix to it the Puja vacation of the Presidency College for 1931 extending from 11th October 1931 to 19th November 1931.

Nadia-Murshidabad. — No. 27B. — 15th August 1931.—Miss Kamini Bose, officiating Assistant Inspectress of Schools, Presidency Division (Nadia and Murshidabad), in the Women's Brauch of the Bengal Educational Service, is declared, in terms of rule 81 (*b*) (*ii*) of the Fundamental Rules, to have been on leave on average pay for twelve days, with effect from the 6th July 1931.

2. She was permitted to prefix to her leave Sunday, the 5th July 1931.

J. M. BOTTOMLEY,
Director of Public Instrn., Bengal (offg.).

Orders by the Inspector-General of Registration, Bengal.

Dacca.—No. 553.—18th August 1931.—Maulvi Khwajah Muhammad Salim, Sub-Registrar of Joydebpur, in the district of Dacca, is allowed leave on average pay for one month and twenty-seven days, under rule 81 (*b*) (*ii*) of the Fundamental Rules, with effect from the 2nd July 1931.

Dacca.—No. 554.—18th August 1931.—Maulvi A. A. Muhammad Hamid Bakht, Sub-Registrar attached to Dacca, is appointed to act as Sub-Registrar of Joydebpur, in the district of Dacca, with effect from the 8th July 1931, during the absence, on leave, of Maulvi Khawja Muhammad Bedar Bakht, Sub-Registrar, or until further orders.

24-Parganas-Khulna. — No. 555. — 19th August 1931.—Maulvi Enayut Rasul, Sub-Registrar, under orders of transfer to Kakdwip, in the district of the 24-Parganas, is allowed leave for twenty-four days, viz., leave on average pay for twenty-two days, under rule 81 (*b*) (*ii*) of the Fundamental Rules, and leave on half average pay for two days, under rule 81 (*d*) of the same rules, in extension of the leave granted to him in this department notification No. 435, dated the 23rd June 1931.

Pabna.—No. 556.—20th August 1931.—Maulvi Ghulam Arab Ali Khan, Sub-Registrar of Gandhail, in the district of Pabna, is allowed leave on average pay for one month, under rule 81 (*b*) (*ii*) of the Fundamental Rules, with effect from the 20th August 1931, or from any subsequent date on which he may be relieved.

Pabna.—No. 557.—20th August 1931.—Babu Brojendra Nath Sarkar, Sub-Registrar attached to Pabna, is appointed to act as Sub-Registrar of Gandhail, in the same district, with effect from the date on which he joins the appointment, during the absence, on leave, of Maulvi Ghulam Arab Ali Khan, Sub-Registrar, or until further orders.

Rangpur.—No. 558.—20th August 1931.—Maulvi Muhammad Azfar, Sub-Registrar attached to Rangpur, is allowed leave for two months, viz., leave on average pay for one month and twenty-one days, under rule 81 (*b*) (*ii*) of the Fundamental Rules, with effect from the 24th July 1931, and extraordinary leave without allowances for the remaining period, under rule 85 (*a*) of the same rules.

S. AHMED,
Inspector-General of Regn., Bengal.

FINANCE DEPARTMENT.

Audit.

NOTIFICATION.

No. 3680F.—20th August 1931.—The Government of Bengal are pleased to sanction the following amendment to the Fundamental and Subsidiary Rules, 1st Edition (Reprint), 1929 :—

Pages 259-264.—*Substitute* the following for the existing Appendix No. 5 :—

APPENDIX No. 5.

(Fundamental Rule 44, Subsidiary Rule 32.)

List of Conveyance or Horse Allowances.

Land Revenue.

	Rs.	A.	P.
Settlement Kanungos employed as Tahsildars of Falakata, Mynaguri, Alipur and Jalpaiguri, provided a horse or pony is kept	20	0	0
Probationary Deputy Collectors on training in the Survey and Settlement Department, provided a horse or pony is kept ..	30	0	0
Probationary Sub-Deputy Collectors on training in the Survey and Settlement Department, provided a horse or pony is kept	20	0	0
Settlement Kanungos who are required to do field or other touring work, provided a horse or pony is kept	20	0	0
First Land Acquisition Collector, Calcutta, for the maintenance of a motor car	100	0	0
	or		
	150	0	0 according to the seating capacity.
Second Land Acquisition Collector, Calcutta, for the maintenance of a four-seated motor car	150	0	0
First Land Acquisition Officer at Alipore, for the maintenance of a four-seated motor car	150	0	0

Excise and Salt.

Superintendents of Excise and Salt, on condition that they maintain—			
(*a*) a two-seated car	100	0	0
(*b*) a four-seated car	150	0	0
Prosecuting Inspectors in Excise and Opium Cases, Calcutta ..	25	0	0
Inspector of Excise and Salt, Calcutta, employed in inspection and detection work	25	0	0
Sub-Inspectors of Excise and Salt, Calcutta, employed in inspection and detection work	15	0	0
Inspector in charge of Excise Intelligence Bureau Office ..	50	0	0
Superintendent, Ganja Mahal, Naugaon, Rajshahi	100	0	0
Inspector, Ganja Mahal, Naugaon, Rajshahi	30	0	0
Sub-Inspector, Ganja Mahal, Naugaon, Rajshahi	30	0	0
Petty officers, Ganja Mahal, Naugaon, Rajshahi	5	0	0
Peons, Ganja Mahal, Naugaon, Rajshahi	2	0	0

Stamps.

Probate Deputy Collector, Calcutta	100	0	0

Forests.

Officer-in-charge of Birch Hill and Lebong Park (provided a horse or pony is kept)	30	0	0
Rangers (when their duties necessitate the keeping of a pony) ..	30	0	0
Deputy Rangers and Foresters in charge of Rangers (when their duties necessitate the keeping of a pony)	30	0	0
Other Deputy Rangers and Foresters (when their duties necessitate the keeping of a pony)	20	0	0

Law and Justice.

Public Prosecutor, Calcutta, provided a motor car is maintained	100	0	0
Coroner of Calcutta	36	0	0

Jails.

	Rs.	A.	P.
Deputy Superintendent, Presidency Jail, Calcutta (on condition that he maintains a motor car)	100	0	0
Jailor, Barisal Jail	8	8	0
Roman Catholic Chaplain, Alipore Central Jail	50	0	0
Deputy Superintendent, Kurseong Sub-Jail	15	0	0
Deputy Superintendent, Asansol Sub-Jail	25	0	0

Ecclesiastical Department.

Senior Chaplain, St. Paul's Cathedral, for visiting the Presidency Jail	50	0	0
Junior Chaplain, St. Paul's Cathedral, for visiting the Presidency General Hospital	50	0	0
Presbyterian Chaplains of Calcutta	50	0	0
Chaplain of Howrah	50	0	0
Chaplain of Barrackpore, for visiting Ishapore	30	0	0
The Chaplains of the Cantonments at Darjeeling (horse allowance)	30	0	0
Presidency Senior Chaplain, Church of Scotland in Bengal, for the maintenance of a motor car	100	0	0

Police.

Deputy Inspector-General of Police, Criminal Investigation Department, so long he controls the Intelligence Branch also, (motor car allowance)	150	0	0
Superintendent of Police, Dacca and Howrah (motor car allowance)	150	0	0
Additional Superintendent of Police, Dacca (motor car allowance)	150	0	0
Superintendent and Additional Superintendent of Police, 24-Parganas (motor car allowance)	150	0	0
Superintendent of Police, Intelligence Branch (motor car allowance)	150	0	0

Note.—In case of an officer who provides himself with a two-seated motor car the allowance will be Rs. 100.

Assistant or Deputy Superintendent of Police in charge of Howrah Town Police (motor car allowance)	100	0	0*
Assistant or Deputy Superintendent of Police in charge of Dacca City Police (motor car allowance)	100	0	0*
Circle Inspectors, Howrah and Golabari Circles	30	0	0†
Inspector-in-charge, "A" Circle, Sadar Subdivision, Dacca ..	30	0	0
Armed Town and Prosecuting Inspectors	30	0	0†

Note.—Inspectors attached to the Training College and School, the River Police and the Railway Police (except the Prosecuting Inspectors) and Circle Inspectors (except those in charge of Howrah and Golabari Circles) are not entitled to the allowance.

Inspectors and Subordinate Police Officers in the Criminal Investigation Department (including the Finger Print Bureau and Criminal Intelligence Bureau) to whom the allowance may be sanctioned by Local Government	30	0	0†
Inspectors and Sub-Inspectors attached to the District Intelligence Branches at Howrah, Alipore and Dacca, but not at other places	30	0	0†
Inspectors and Sub-Inspectors attached to the District Detective Departments at Howrah, Alipore and Dacca	30	0	0†
Sergeants and Sub-Inspectors (excluding those attached to the Police Training College and School, or Railway or River Police or police-stations where boat is the only means of conveyance)	30	0	0†

*Government Order No. 2486 Pl., dated the 11th May 1928.

†Note 1.—The allowance is granted on the production of a certificate that a horse is actually maintained in a serviceable condition. Cycle allowance of Rs. 10 is granted on production of two certificates—(1) that a bicycle instead of a horse is actually maintained by the officer for whom the allowance is being drawn, and (2) that the Superintendent recognises this means of conveyance as sufficient and suitable. In case of Inspectors who draw their pay in Gazetted Officers' pay bill form the former certificate shall be attested by the officers themselves and they shall obtain the latter certificate from the Superintendent of Police. The cycle allowance is not admissible during leave and joining time. The horse allowance may be drawn up to a period of 4 months during leave on average pay provided (i) the authority sanctioning the leave certifies that the officer is likely to return to the post to which the allowance is attached or to another

	Rs.	A.	P.
Ten head constables in charge of cart road patrols and Frontier Patrol posts in Darjeeling (pony allowance)	20	0	0
Four Inspectors, Criminal Investigation Department ..	30	0	0
Three Sub-Inspectors, Criminal Investigation Department ..	30	0	0

Calcutta Police.

Assistant Commissioners of Police, Calcutta	75	0	0
Police Surgeon, Calcutta (no condition)	75	0	0
Deputy Commissioners of Police, Calcutta—			
Four-seated car	150	0	0
Double-seated car	100	0	0
One Inspector attached to the Passport and Pass Department of the Calcutta Police	50	0	0‡
Inspectors of the Calcutta City Police and other Subordinate Police Officers attached to it to whom the allowance may be granted by the Local Government	25	0	0‡
Sub-Inspectors, Calcutta City Police	20	0	0‡
Sergeants, Calcutta Police	20	0	0‡
Jamadars, Calcutta Armed Police (bicycle allowance) ..	10	0	0‡

Ports and Pilotage.

Engineer and Ship Surveyor, Chittagong (for the maintenance of a motor car)	75	0	0

Education.

Director of Public Instruction, Bengal, on condition that he maintains a motor car	100	0	0
Inspectress of Schools, Dacca Circle, the allowance to be given so long as the headquarters of the Inspectress are at Dacca	35	0	0
Subdivisional Inspectors of Schools, Calcutta	35	0	0
Inspectress of Schools, Presidency and Burdwan Divisions, provided she keeps a motor car	100	0	0
Principal, Bengal Engineering College, on condition that he keeps a motor car	100	0	0
Inspector of European Schools stationed in Calcutta for journeys in Calcutta and suburbs	30	0	0
Sub-Inspectors of Schools, Calcutta	30	0	0
Principal, David Hare Training College, Calcutta, to enable him to supervise the working of the Calcutta Vernacular Training School	20	0	0
Inspector or Additional or Second Inspector of Schools in charge of Calcutta Schools	35	0	0
District Inspector of Schools, Calcutta	35	0	0
Three Zenana Governesses engaged in the instruction of zenana classes in the town of Dacca	30	0	0
One Urdu Zenana Governess, Dacca, for the teaching of Urdu to the Muhammadan girls of the Eden Hindu School as well as to others at convenient centres in Dacca town	30	0	0

---

post carrying a similar allowance and (*ii*) that he continues to incur the whole or a considerable part of the expense to meet which the allowance was granted. The horse allowance may be drawn during joining time subject to the following conditions :—

(*i*) that the officer continues to maintain a horse ; and
(*ii*) that he is entitled to draw a similar allowance in the post to which he is transferred.

Officers stationed in Calcutta (including Sealdah and Alipore), Howrah, Darjeeling town and Darjeeling, Jore Bungalow Mirik, Kurseong and Kalimpong police-stations in the Darjeeling district, may draw the allowance of Rs. 30 a month subject to no condition. Sergeants of the Dacca City Police for whom horses are maintained at the cost of Government may draw the allowance of Rs. 15 a month subject to no condition. The Inspector of the Dacca City Police for whom a horse is maintained may draw the allowance of Rs. 10 a month on condition that he keeps a bicycle. These allowances are not admissible during leave.

Note 2.—Sub-Inspectors on deputation to the Finger Print Bureau may draw conveyance allowance on the same scale as drawn by them previous to their deputation provided they keep horses or bicycles as the case may be. The horse allowance may be drawn during leave on average pay not exceeding four months or during joining time subject to the usual conditions.

Note 3.—Subject to the condition laid down in Subsidiary Rule 33 the fixed conveyance allowance is not forfeited when daily allowance is drawn.

‡ These allowances are granted on production of a certificate to the effect that necessary means of conveyance have been maintained. Their drawal during leave is governed by rules made under Fundamental Rule 93.

	Rs.	A.	P.
Assistant Inspectresses of Schools, Dacca, Comilla each ..	30	0	0
Special Assistant Inspectress of Schools, Calcutta	45	0	0
Sub-Inspectress of Schools, Sadar Circle, Howrah, for inspection of schools situated within 5 miles of her headquarters, subject to the condition that the sanctioned maximum monthly allowance of Rs. 30 for travelling beyond 5 miles radius is not exceeded	15	0	0
Assistant Inspector of Schools for Muhammadan Education, Presidency Division, for inspection work in Calcutta and suburb	10	0	0
Two Governesses engaged in the instruction of zenana classes at Bogra, one zenana Governess, Jalpaiguri, Tippera, Faridpur, Mymensingh, Rangpur, Chittagong and Noakhali each ..	20	0	0
Medical.			
Assistant to the Civil Surgeon, 24-Parganas, held by Civil Assistant Surgeons	20	0	0
Superintendent and Medical Officer of the Albert Victor Asylum for Lepers, Gobra, Calcutta	15	0	0
Police Surgeon, Calcutta	75	0	0
Public Health.			
Health Officer of the Port of Calcutta—			
For a two-seated car	100	0	0
For four-seated car	150	0	0
Assistant Director of Public Health for School Hygiene ..	35	0	0
Medical Inspector of Schools	35	0	0
Inspector and Sub-Inspector of Vaccination, Darjeeling district (subject to the maintenance of a pony)	20	0	0
Industries.			
Industrial Engineer (for a two-seated car)	100	0	0
Assistant Electric Inspector, Bengal, for the maintenance of a motor cycle	50	0	0
Electrical Advisor and Chief Electric Inspector for the maintenance of a motor car	75	0	0
Electrical Advisor and Chief Electric Inspector, if no car is maintained	35	0	0
Miscellaneous Departments.			
Arms Act Inspector, Calcutta, for inspecting places licensed for the storage of petroleum and carbide of calcium in the town and in suburbs	50	0	0
Probation Officers, House of Detention, for Juveniles, Calcutta ..	25	0	0
Chief Inspector of Factories, Bengal (subject to the maintenance of a four-seated motor car)	150	0	0
Inspectors of Factories, Bengal (subject to the maintenance of a motor car)	100	0	0
Certifying Surgeon of Factories, Barrackpore (subject to the maintenance of a motor car)	100	0	0
Chief Inspector of Boilers (for the maintenance of a four-seated motor car)	150	0	0
Inspectors of Boilers (for the maintenance of a motor car) ..	100	0	0
Inspectors of Boilers (if no motor car is maintained) ..	50	0	0
Labour Intelligence Officer, Bengal (subject to the maintenance of a motor car)	100	0	0
Chief Inspector of Smoke Nuisances in Bengal for a four-seated motor car	150	0	0
Assistant Inspector of Factories, Bengal—			
If a motor car is maintained	100	0	0
If no motor car is maintained	50	0	0
Certifying Surgeon of Factories, Calcutta, for the maintenance of a motor car	100	0	0
Inspectors of Smoke Nuisances, Bengal, for the maintenance of a motor car	100	0	0
Inspectors of Smoke Nuisances, Bengal, if no motor car is maintained	75	0	0
Arboricultural Expert, Bengal, ...	30	0	0
Curator of the Lloyd Botanical Gardens at Darjeeling (provided a horse or pony is kept)	30	0	0
Collector of Stamp Revenue, Calcutta, (for a four-seated car) ..	150	0	0

Mungpoo Plantation.

	Rs.	A.	P.
Manager (for two ponies at Rs. 30 each)	60	0	0
Assistant Manager (for one pony)	30	0	0

Munsong Plantation.

Manager (for two ponies at Rs. 30 each)	60	0	0
First Assistant Manager (for one pony)	30	0	0
Second Assistant Manager (for one pony)	30	0	0
First Overseer (for one pony)	30	0	0

Public Works Department.

Executive Engineers, 1st, 2nd and 3rd Calcutta Divisions (according as a motor car is maintained or not)	75	0	0
	or		
	35	0	0
Superintending Engineer, Electrical Circle (subject to the maintenance of a motor car)	75	0	0
Executive Engineer, Western (Electrical) Division (subject to the maintenance of a motor car)	75	0	0
Executive Engineer, Eastern (Electrical) Division (subject to the maintenance of a motor car)	75	0	0
Electrician, Dacca (for the maintenance of a motor car).. ..	50	0	0
Plumbing Expert, Bengal (according as a motor car is maintained or not)	75	0	0
	or		
	50	0	0
Assistant Plumbing Expert	30	0	0
Plumbing Inspector	30	0	0
Upper Subordinates	30	0	0
Members of the Subordinate Engineering Service or lower subordinates placed in charge of subdivisions, for the maintenance of a horse, the necessity for which is certified by the Controlling Officer	30	0	0
Members of the Subordinate Engineering Service employed in the district of Darjeeling or in Sikkim and lower subordinates employed in that district or in Sikkim (for the maintenance of a pony)	30	0	0
Subordinates employed on Archæological works	30	0	0
Overseers of the Subordinate Engineering Service and lower subordinates (to be increased to Rs. 22-8 when a pony is maintained and fodder sells dearer than 12 seers per rupee) ..	15	0	0
Sub-Assistant Surgeons (to be increased to Rs. 22-8 when a pony is maintained and fodder sells dearer than 12 seers per rupee)	15	0	0

N.B.—The upper subordinates, members of the Subordinate Engineering Service and lower subordinates employed in electrical works will also draw conveyance allowance at the rates shown under this head.

Irrigation Department.

Upper subordinates	30	0	0
Members of the Subordinate Engineering Service and lower subordinates placed in charge of subdivisions for the maintenance of a horse, the necessity for which is certified by the Controlling Officer	30	0	0
Overseers of the Subordinate Engineering Service and lower subordinate (to be increased to Rs. 22-8 when a pony is maintained and fodder sells dearer than 12 seers per rupee) ..	15	0	0
Zilladars (to be increased to Rs. 22-8 when a pony is maintained and fodder sells dearer than 12 seers per rupee) ..	15	0	0
Sub-Assistant Surgeons (to be increased to Rs. 22-8 when a pony is maintained and fodder sells dearer than 12 seers per rupee)	15	0	0

E. N. BLANDY,

Secy. to the Govt. of Bengal.

DEPARTMENT OF AGRICULTURE AND INDUSTRIES.

Miscellaneous.

NOTIFICATIONS.

Minister-in-charge: The Hon'ble Khan Bahadur Maulvi K. G. M. Faroqui.

Calcutta.—No. 3674Misc. — 17th August 1931.—Mr. J. C. Sen, Assistant Secretary to the Government of Bengal, Department of Agriculture and Industries, is allowed leave on average pay for two months and three days, under rule 81 (*b*) (*ii*) of the Fundamental Rules, in extension of the leave granted to him under the orders of the 6th August 1931.

Calcutta.—No. 3675Misc.—17th August 1931.—Babu Sures Chandra Ray, Head Assistant, Agriculture Branch, is appointed to act as Assistant Secretary to the Government of Bengal, Department of Agriculture and Industries, with effect from the 12th August 1931, during the absence, on leave, of Mr. J. C. Sen, or until further orders.

L. R. FAWCUS,
Secy. to the Govt. of Bengal.

Orders by the Registrar of Co-operative Societies, Bengal.

ERRATUM.

In notification No. 10-L., dated the 7th August 1931, published in the *Calcutta Gazette* at page 982, Part I of the 20th August 1931, relating to the appointment of liquidator of Paschim Char Fakira Joutha Bank *read* "Noakhali" *for* "Netrokona."

S. K. GANGULY,
Regr., Co-operative Societies, Bengal.

REVENUE DEPARTMENT.

Land Revenue.

NOTIFICATIONS.

Pabna.—No. 10334L.R.—20th August 1931. —In exercise of the power conferred by sub-clause (*b*) of clause (7) of section 3 of the Land Registration Act, 1876 (Bengal Act VII of 1876), the Governor in Council is pleased to adopt the villages lying within the tauzi Nos. 325 and 1044 situated within the administrative units of the Pabna district as surveyed and recorded under the Bengal Tenancy Act (Act VIII of 1885) and the Bengal Survey Act (Bengal Act V of 1875) in accordance with the notification No. 1478T.R., dated the 22nd September 1919, as defining mauzas for the purpose of that clause in the said tauzis in that district.

Rajshahi.—No. 10477L.R. — 24th August 1931.—In exercise of the powers conferred by sub-section (3) of section 158A of the Bengal Tenancy Act, 1885 (VIII of 1885), the Governor in Council is pleased to vest Maulvi Muhammad Abdulla, Deputy Collector, Rajshahi, with powers to perform the functions of a certificate officer under the Bengal Public Demands Recovery Act, 1913, for the purposes of the said section and in respect of arrears of rent (including cesses) due to Raja Bhupendra Narayan Sinha Bahadur of Nashipur in the district of Rajshahi.

Land Acquisition.

NOTIFICATIONS.

Burdwan.—No. 10302L.A —20th August 1931.—The Governor in Council is pelased to cancel the notification No. 6405L.A., dated the 8th May 1931, under section 4 of the Land Acquisition Act, published at page 567, Part I of the *Calcutta Gazette* of the 14th idem, in respect of the proposed acquisition of 0·34 of an acre of land required by the South Kajora Colliery Company, Limited, for constructing a tram line extending from the South Kajora Colliery to Nowdiha Siding of the East Indian Railway, in the village of Madhusudanpur, thana Ondal, pargana Shergarh, district Burdwan.

Jalpaiguri.—No. 10305L.A. — 20th August 1931.—Whereas it appears to the Governor in Council that land is likely to be required to be taken by Government at the expense of the Jalpaiguri district board for a public purpose, viz., for the construction of an approach road and guide bank for Karotoa bridge at Panchagarh, in the village of Dhakamara, pargana Kajirhat, zilla Jalpaiguri, it is hereby notified that for the above purpose a piece of land, comprising parts of settlement plots Nos. 540, 541, 8, 547, 256, 548, and 546 of settlement sheet No. 12, and measuring, more or less, 5·20 acres, bounded on the—

North—By settlement plots Nos. 540 and 541,
East—By settlement plot No. 548,
South—By settlement plots Nos. 8, 547 and 256,
West—By settlement plots Nos. 8 and 546, of sheet No. 12,

is likely to be required within the aforesaid village of Dhakamara.

This notification is made, under the provisions of section 4 of Act I of 1894, to all whom it may concern.

A plan of the land may be inspected in the office of the Deputy Commissioner, Jalpaiguri.

In exercise of the powers conferred by the aforesaid section, the Governor in Council is pleased to authorise the officers for the time being engaged in the undertaking, with their servants and workmen, to enter upon and survey the land and do all other acts required or permitted by that section.

Any person interested in the above land, who has any objection to the acquisition thereof, may, within thirty days after the date on which public notice of the substance of this notification is given in the locality, file an objection in writing before the Deputy Commissioner, Jalpaiguri.

Calcutta. — No. 10308L.A. — 20th August 1931.—Whereas it appears to the Governor in Council that land is likely to be required to be taken by Government at the expense of the Calcutta Improvement Trust for a public purpose, viz., for Alignment No. IX (Central Avenue—Shambazar Street to Guliff Street)

in Ward No. 1 of the Calcutta Municipality in the city of Calcutta, it is hereby notified that for the above purpose a piece of land being premises No. 26, Raja Raj Ballav Street and measuring, more or less, 4 cottahs and 8 chittaks equivalent to 0·0744 of an acre, bounded on the—

North - By Raja Raj Ballav Street,

East—By premises No. 27, Raja Raj Ballav Street and a portion of premises No. 9, Bir Chand Gossain Lane,

South- By a portion of premises No. 9, Bir Chand Gossain Lane and Bir Chand Gossain Lane,

West—By premises No. 25/1, Raja Raj Ballav Street,

is likely to be required within the aforesaid Ward No. 1 of the Calcutta Municipality in the city of Calcutta.

This notification is made, under the provisions of section 4 of Act I of 1894, to all whom it may concern.

A plan of the land may be inspected in the office of the First Land Acquisition Collector, 5, Bankshall Street, Calcutta.

In exercise of the powers conferred by the aforesaid section, the Governor in Council is pleased to authorise the officers for the time being engaged in the undertaking, with their servants and workmen, to enter upon and survey the land and do all other acts required or permitted by that section.

Any person interested in the above land, who has any objection to the acquisition thereof, may, within thirty days after the date on which public notice of the substance of this notification is given in the locality, file an objection in writing before the First Land Acquisition Collector, 5, Bankshall Street, Calcutta.

24-Parganas.—No. 10311L.A.—20th August 1931.—Whereas it appears to the Governor in Council that land is likely to be required to be taken by Government at the expense of district board, 24-Parganas, for a public purpose, viz., for Haroa dispensary and staff quarters, in the village of Haroa, jurisdiction list No. 112, thana Haroa, pargana Balanda, district 24-Parganas, it is hereby notified that for the above purpose a piece of land, comprising cadastral survey plot No. 229 and part of survey plot No. 231, and measuring, more or less, 0·2632 of an acre, is likely to be required within the aforesaid village of Haroa.

This notification is made, under the provisions of section 4 of Act I of 1894, to all whom it may concern.

A plan of the land may be inspected in the office of the District Engineer, 24-Parganas.

In exercise of the powers conferred by the aforesaid section, the Governor in Council is pleased to authorise the officers for the time being engaged in the undertaking, with their servants and workmen, to enter upon and survey the land and do all other acts required or permitted by that section.

Any person interested in the above land, who has any objection to the acquisition thereof, may, within thirty days after the date on which public notice of the substance of this notification is given in the locality, file an objection in writing before the Collector of the 24-Parganas

Burdwan.—No. 10317L.A.—20th August 1931.—Whereas it appears to the Governor in Council that land is likely to be required to be taken by Government at the expense of the Asansol Municipality for a public purpose, viz., for a road from the Egli Road extension to the Young Road extension in connection with the Asansol water-supply scheme at Asansol Municipality, in the village of Asansol Municipality, jurisdiction list No. 24, thana Asansol, pargana Shergarh, district Burdwan, it is hereby notified that for the above purpose a piece of land, comprising parts of cadastral plots Nos. 2207, 2210, 2211 and 2212, and measuring, more or less, 0·252 of an acre, is likely to be required within the aforesaid village of Asansol Municipality.

This notification is made, under the provisions of section 4 of Act I of 1894, to all whom it may concern.

A plan of the land may be inspected in the office of the Special Land Acquisition Officer, Burdwan, as well as in that of the Chairman, Asansol Municipality.

In exercise of the powers conferred by the aforesaid section, the Governor in Council is pleased to authorise the officers for the time being engaged in the undertaking, with their servants and workmen, to enter upon and survey the land and do all other acts required or permitted by that section.

Any person interested in the above land, who has any objection to the acquisition thereof, may, within thirty days after the date on which public notice of the substance of this notification is given in the locality, file an objection in writing before the Collector of Burdwan.

Dacca. — No. 10320L.A. — 20th August 1931.—Whereas it appears to the Governor in Council that land is likely to be required to be taken by Government at the expense of the Sabhar union board for a public purpose, viz., for the construction of a road passing from north to south named Rai Mohan Sashi Mohan Saha road at Sabhar in the mauzas of Sabhar, Binadbaid and Chhotabalimehar, parganas Hishpur, Chandprotap-Bajeapti-Lakheraj, Chandprotap-Nawra, Kashimpur-Sashan-Bashan, Sujabad-Kutabpur Tappa Kalma and Salimpratap Sadarpur, zilla Dacca, it is hereby notified that for the above purpose a piece of land measuring, more or less, 2·57 acres and comprising part of cadastral survey plot No. 25 of mauza Binadbaid, parts of cadastral survey plots Nos. 29, 30, 34, 35, 36, 51, 56, 63, 62, 89, 90, 91, 700, 714, 715, 718 and 719 of mauza Sabhar and parts of cadastral survey plots Nos. 75, 76, 81, 82, and 83 of mauza Chhotabalimehar, is likely to be required within the aforesaid mauzas of Sabhar, Binadbaid and Chhotabalimehar.

This notification is made, under the provisions of section 4 of Act I of 1894, to all whom it may concern.

A plan of the land may be inspected in the office of the Collector of Dacca.

In exercise of the powers conferred by the aforesaid section, the Governor in Council is pleased to authorise the officers for the time being engaged in the undertaking, with their servants and workmen, to enter upon and

survey the land and do all other acts required or permitted by that section.

Any person interested in the above land, who has any objection to the acquisition thereof, may, within thirty days after the date on which public notice of the substance of this notification is given in the locality, file an objection in writing before the Collector of Dacca.

Hooghly.—No. 10326L.A.—20th August 1931.—The Governor in Council is pleased to cancel the notification No. 6941L.A., dated the 16th January 1931, under section 4 of the Land Acquisition Act, I of 1894, published at page 87, Part I of the *Calcutta Gazette* of the 22nd idem, in respect of the proposed acquisition of 0·139 of an acre of land required by the district board of Hooghly for widening a portion of the Mayapur Jagatpur road in its 12th mile in the village of Kamarhat (Part 1), thana Khanakul, pargana Chewa, district Hooghly.

Nadia.—No. 10331L.A.—20th August 1931.—The Governor in Council is pleased to cancel the notification No. 12681L.A., dated the 1st November 1930, under section 4 of the Land Acquisition Act, I of 1894, published at page 1725, Part I of the *Calcutta Gazette* of the 6th idem, in respect of the proposed acquisition of land required for the construction of staff quarters of the Eastern Bengal Railway, at Ranaghat, in the villages of Ranaghat and Naushra, pargana Sreenagar, district Nadia.

Pabna.—No. 10460L.A.—24th August 1931. Babu Gourendra Krishna Deb, Sub-Deputy Magistrate and Sub-Deputy Collector, Serajganj, in the district of Pabna, is vested with the powers of a Collector under the Land Acquisition Act, I of 1894, in that subdivision.

Murshidabad.—No. 10474L.A.—24th August 1931.—Whereas it appears to the Governor in Council that land is likely to be required to be taken by Government at the expense of the Kashipur union board for a public purpose, viz., for the construction of an approach road, in the village of Kalitala in mauza Maniknagar, pargana Kulberia, zilla Murshidabad, it is hereby notified that for the above purpose a piece of land comprising part of cadastral plot No. 10251 measuring, more or less, 0·12 of an acre, is likely to be required within the aforesaid village of Kalitala in mauza Maniknagar.

This notification is made, under the provisions of section 4 of Act I of 1894, to all whom it may concern.

A plan of the land may be inspected in the office of the Collector of Murshidabad.

In exercise of the powers conferred by the aforesaid section, the Governor in Council is pleased to authorise the officers for the time being engaged in the undertaking, with their servants and workmen, to enter upon and survey the land and do all other acts required or permitted by that section.

Any person interested in the above land, who has any objection to the acquisition thereof, may, within thirty days after the date on which public notice of the substance of this notification is given in the locality, file an objection in writing before the Collector of Murshidabad.

Burdwan.—No. 10481L.A.—24th August 1931.—Whereas it appears to the Governor in Council that land is likely to be required to be taken by Government at the public expense for a public purpose, viz., for repairs to the Salalpur retired line in mile 33 of the Damodar left embankment, in the village of Sachra, jurisdiction list No. 15, thana Jamalpur, pargana Nalhi, district Burdwan, it is hereby notified that for the above purpose a piece of land measuring, more or less, 1·15 acres, bounded on the—

North—By the land of Rased Molla,
East and West—By the Government embankment,
South—By the land of Felu Bala Dasi,

is likely to be required within the aforesaid village of Sachra.

This notification is made, under the provisions of section 4 of Act I of 1894, to all whom it may concern.

A plan of the land may be inspected in the office of the Special Land Acquisition Officer, Burdwan, as well as in that of the Executive Engineer, Damodar Canal Division, Calcutta.

In exercise of the powers conferred by the aforesaid section, the Governor in Council is pleased to authorise the officers for the time being engaged in the undertaking, with their servants and workmen, to enter upon and survey the land and do all other acts required or permitted by that section.

Any person interested in the above land, who has any objection to the acquisition thereof, may, within thirty days after the date on which public notice of the substance of this notification is given in the locality, file an objection in writing before the Collector of Burdwan.

Burdwan.—No. 10487L.A.—24th August 1931.—Whereas it appears to the Governor in Council that land is likely to be required to be taken by Government at the public expense for a public purpose, viz., for constructing 1st and 2nd miles of distributary No. 6C, Main Canal, Damodar Canal Project, in the villages of Bhita, Jamra or Jamar, Kadgachi, Jagannathpur or Jamalpur, Srikrishnapur or Shahapur and Chandutia, jurisdiction list Nos. 53, 69, 68, 67, 55 and 66, respectively, thana Burdwan, pargana Shahabad, district Burdwan, it is hereby notified that for the above purpose a piece of land measuring, more or less, 9·21 acres, starting from chainage 37,260, feet of the distributary No. 6, Damodar Canal Project, in mauza Bhita, and proceeding generally towards the south-east up to chainage 8,000 feet through mauzas Bhita, Jamra or Jamar, Kadgachi, Jagannathpur or Jamalpur and Srikrishnapur or Shahapur and then towards east from chainage 8,000 feet of the proposed distributary passing through the mauzas Srikrishnapur and Shahapur and Chandutia and terminating in mauza Chandutia at chainage 10,560 feet, varying in width from 15 feet to 365 feet and being 10,515 feet in length, is likely to be required within the aforesaid villages of Bhita, Jamra or Jamar, Kadgachi, Jagannathpur or Jamalpur, Srikrishnapur or Shahapur and Chandutia, respectively.

This notification is made, under the provisions of section 4 of Act I of 1894, to all whom it may concern.

A plan of the land may be inspected in the office of the Special Land Acquisition Deputy Collector, Burdwan, as well as in that of the Executive Engineer, Damodar Canal Division, Burdwan.

In exercise of the powers conferred by the aforesaid section, the Governor in Council is pleased to authorise the officers for the time being engaged in the undertaking, with their servants and workmen, to enter upon and survey the land and do all other acts required or permitted by that section.

Any person interested in so much of the above land, as are not waste or arable, who has any objection to the acquisition thereof, may, within thirty days after the date on which public notice of the substance of this notification is given in the locality, file an objection in writing before the Collector of Burdwan.

In exercise of the powers conferred by section 17 (*4*) of the Land Acquisition Act, I of 1894, as amended by Act XXXVIII of 1923, the Governor in Council is pleased to direct that the provisions of section 5A of the Act shall not apply to the waste or arable portions of the land in this case.

Burdwan.—No. 10490L.A.—24th August 1931.—Whereas it appears to the Governor in Council that land is likely to be required to be taken by Government at the public expense for a public purpose, viz., for constructing distributary No. 1E of distributary No. 1, Branch Canal, Damodar Canal Project, in the villages of Jehara, Gopalpur and Simdali, jurisdiction list Nos. 100, 98 and 102, respectively, of thana Burdwan, and in the village of Mahachanda, jurisdiction list No. 109, of thana Bhatar, pargana Burdwan, district Burdwan, it is hereby notified that for the above purpose a strip of land commencing at chainage 0 which is the central point of distributary No. 1 at chainage 57,109 feet of the Branch Canal, and proceeding generally towards the north through mauza Jehara up to chainage 1,100 feet, then turning towards the north-east and proceeding through mauza Jehara up to chainage 4,543 feet, then turning again towards the east and proceeding through mauzas Jehara, Gopalpur, Simdali and Mahachanda, terminating at chainage 21,143 feet in mauza Mahachanda, varying in width from 25 feet to 241 feet and being 21,110½ feet in length, and measuring, more or less, 18·91 acres, is likely to be required within the aforesaid villages of Jehara, Gopalpur, Simdali and Mahachanda.

This notification is made, under the provisions of section 4 of Act I of 1894, to all whom it may concern.

A plan of the land may be inspected in the office of the Special Land Acquisition Officer, Burdwan, as well as in that of the Executive Engineer, Damodar Canal Division, Burdwan.

In exercise of the powers conferred by the aforesaid section, the Governor in Council is pleased to authorise the officers for the time being engaged in the undertaking, with their servants and workmen, to enter upon and survey the land and do all other acts required or permitted by that section.

Any person interested in such portions of the above land, as are not waste or arable, who has any objection to the acquisition thereof, may, within thirty days after the date on which public notice of the substance of this notification is given in the locality, file an objection in writing before the Collector of Burdwan.

In exercise of the powers conferred by section 17 (*4*) of the Land Acquisition Act, I of 1894, as amended by Act XXXVIII of 1923, the Governor in Council is pleased to direct that the provisions of section 5A of the Act shall not apply to the waste or arable portions of the land in this case.

Burdwan.—No. 10500L.A.—24th August 1931.—Whereas it appears to the Governor in Council that land is likely to be required to be taken by Government at the public expense for a public purpose, viz., for constructing 1st, 2nd, 3rd and 4th miles up to chainage 2,596 feet of distributary No. 1D of distributary No. 1, Branch Canal, Damodar Canal Project, in the village of Satinandi, jurisdiction list No. 174, thana Galsi and in the villages of Talit, Bhagabanpur or Bagur and Amar, jurisdiction list Nos. 91, 101 and 25, respectively, thana Burdwan, pargana Burdwan, district Burdwan, it is hereby notified that for the above purpose a strip of land, starting from chainage 46,337 feet of distributary No. 1, Branch Canal of the Damodar Canal Project in mauza Satinandi and running generally towards the south up to chainage 1,774 feet; then proceeding towards the south-east through mauzas Talit, Bhagabanpur or Bagur and terminating at chainage 18,436 feet in mauza Amar, varying in width from 20 feet to 275 feet and being 18,406 feet in length, and measuring, more or less, 15·21 acres, is likely to be required within the aforesaid villages of Satinandi, Talit, Bhagabanpur or Bagur and Amar.

This notification is made, under the provisions of section 4 of Act I of 1894, to all whom it may concern.

A plan of the land may be inspected in the office of the Special Land Acquisition Deputy Collector, Burdwan, as well as in that of the Executive Engineer, Damodar Canal Division, Burdwan.

In exercise of the powers conferred by the aforesaid section, the Governor in Council is pleased to authorise the officers for the time being engaged in the undertaking, with their servants and workmen, to enter upon and survey the land and do all other acts required or permitted by that section.

Any person interested in such portions of the above land as are not waste or arable, who has any objection to the acquisition thereof, may, within thirty days after the date on which public notice of the substance of this notification is given in the locality, file an objection in writing before the Collector of Burdwan.

In exercise of the powers conferred by section 17 (*4*) of the Land Acquisition Act, I of 1894, as amended by Act XXXVIII of 1923, the Governor in Council is pleased to direct that the provisions of section 5A of the Act shall not apply to the waste or arable portions of the land in this case.

Burdwan.—No. 10595L.A. — 25th August 1931.—Whereas it appears to the Governor in Council that land is likely to be required to be taken by Government at the public

expense for a public purpose, viz., for constructing distributary No. 1F of distributary No. 1E, Branch Canal, Damodar Canal Project, in the villages of Gopalpur and Jehara, jurisdiction list Nos. 98 and 100, respectively, of thana Burdwan, and in the villages of Nunari, Parihat and Mahachanda, jurisdiction list Nos. 55, 54 and 109, respectively, of thana Bhatar, pargana Burdwan, district Burdwan, it is hereby notified that for the above purpose a piece of land measuring, more or less, 12·21 acres, commencing at chainage 0, which is the central point of the distributary No. 1E at chainage 6,300 feet of the Branch Canal, and proceeding generally towards the north through mauzas Gopalpur and Jehara up to chainage 4,007 feet and then turning towards the east and proceeding through mauzas Gopalpur, Nunari, Parihat and Mahachanda, varying in width from 15 feet to 260 feet and being 15,975 feet in length, is likely to be required within the aforesaid villages of Gopalpur, Jehara, Nunari, Parihat and Mahachanda.

This notification is made, under the provisions of section 4 of Act I of 1894, to all whom it may concern.

A plan of the land may be inspected in the office of the Special Land Acquisition Officer, Burdwan, as well as in that of the Executive Engineer, Damodar Canal Division, Burdwan.

In exercise of the powers conferred by the aforesaid section, the Governor in Council is pleased to authorise the officers for the time being engaged in the undertaking, with their servants and workmen, to enter upon and survey the land and do all other acts required or permitted by that section.

Any person interested in such portion of the above land as is not waste or arable, who has any objection to the acquisition thereof, may, within thirty days after the date on which public notice of the substance of this notification is given in the locality, file an objection in writing before the Collector of Burdwan.

In exercise of the powers conferred by section 17 (*4*) of the Land Acquisition Act, 1 of 1894, as amended by Act XXXVIII of 1923, the Governor in Council is pleased to direct that the provisions of section 5A of the Act shall not apply to the waste or arable portions of the land in this case.

DECLARATION.

Midnapore.—No. 10323L.A.—20th August 1931.—Whereas it appears to the Governor in Council that land is required to be taken by Government at the public expense for a public purpose, viz., for a backing in the 3rd mile of the Shaikhpur Circuit Embankment in mauza Konora, jurisdiction list No. 9, pargana Barda, zilla Midnapore, it is hereby declared that for the above purpose a piece of land measuring, more or less, 0·19 of an acre, comprised in portions of cadastral survey plots Nos. 385, 396 and 397 of mauza Konora, is required within the aforesaid village of Konora.

This declaration is made, under the provisions of section 6 of Act I of 1894, to all whom it may concern.

A plan of the land may be inspected in the office of the Subdivisional Officer, Ghatal.

ERRATA.

Rangpur.—No. 10314L.A. — 20th August 1931.—In lines 6 and 46 of declaration No. 1187L.A., dated the 22nd January 1931, under section 6 of the Land Acquisition Act, I of 1894, published at pages 116-117, Part I of the *Calcutta Gazette* of the 29th idem, in respect of the land required by the Eastern Bengal Railway for staff quarters at Fulchari for the words "village of Fulchari" read the words "villages of Pifulia and Gazaria."

24-Parganas.—No. 10329L.A.—20th August 1931.—In declaration No. 13618L.A., dated the 27th August 1927, published at page 1820, Part I of the *Calcutta Gazette* of the 1st September 1927, in respect of the acquisition of land for Baruipore-Dakshin Baraset Railway in the district of 24-Parganas in lines 4, 8 and 11 for the words "Bijra (Govindapur)" *read* "Bijra, Sarberia or Sarbere, Baneswarpur and Kalikapur or Barasat."

Forests.

NOTIFICATIONS.

Sundarbans-Jalpaiguri. — No. 10383For.—22nd August 1931.—Mr. J. C. Nath, Deputy Conservator of Forests, attached to the Sundarbans Division, is transferred to the Jalpaiguri Division and is posted to the charge of that division, with headquarters at Jalpaiguri, with effect from the afternoon of the 8th March 1931.

Buxa-Jalpaiguri.—No. 10384For. — 22nd August 1931.—Mr. A. C. Gupta, Deputy Conservator of Forests, attached to Buxa Division, with headquarters at Damanpur, was in charge of the Jalpaiguri Forest Division from the afternoon of the 7th March 1931 to the afternoon of the 8th March 1931, in addition to his own duties.

Buxa.—No. 10471For.—24th August 1931.—In supersession of this department notification No. 2637T.R., dated the 13th May 1931, Mr. A. C. Gupta, Deputy Conservator of Forests, on expiry of the leave granted to him in notification No. 2071For., dated the 31st March 1931, joined his duties at Damanpur in the Buxa Division on the forenoon of the 4th May 1931 as an attached officer and took over charge of the Buxa Division on the forenoon of the 5th May 1931.

Excluded Area.

NOTIFICATION.

Chittagong Hill Tracts.—No. 10337E.A.—20th August 1931.—In exercise of the power conferred by section 18 of the Chittagong Hill-tracts Regulation, 1900 (Regulation 1 of 1900), the Governor in Council is pleased to direct that the following amendments be made in the rules for the administration of the Chittagong Hill Tracts, published under notification No. 123P.D., dated the 1st May 1900, as subsequently amended, namely:—

(*1*) *For* Rule 42 (*1*) of the said rules, *substitute* the following:—

"**Joom Rent and Begar.**—Every joomia who has by custom to pay joom rent shall pay it

to the headman in whose mauza he resides, and the headman shall pay the joom rent thus received to the Circle Chief, after deducting the headman's share.

The headman shall pay half the joom rent due to the Chief on the Chief's *Punya* day, and the remaining half on 1st January. The joomias shall pay half their joom rent to the headman in time for him to pay the Chief on the *Punya* day, and the remaining half in time for him to pay the Chief on 1st January. Joom rent not paid either by the joomia to the headman or by the headman to the Chief by 1st January will become an arrear on that date. Interest at 12½ per cent. will be chargeable on arrears."

(2) *For* rule 42 (3) of the said rules, *substitute* the following:—

"Headmen shall submit to their Chiefs their joom tauzis in the form approved by the Deputy Commissioner, with their lists and counterfoils of receipts on 1st January each year."

H. C. V. PHILPOT,
Secy. to the Govt. of Bengal.

IRRIGATION DEPARTMENT.

Irrigation.

NOTIFICATION.

No. 16I.—17th July 1931.—The following draft of amendments, which, in exercise of the powers conferred by sections 6 and 11 of the Canals Act, 1864 (Bengal Act V of 1864), the Governor in Council intends to make, in the rules and schedule of rates of tolls for the Rampur Bil Khal joining the Guzipur Khal at Guzipur and Chechri on the north and Amua Done at Amua on the south in the district of Bakarganj (published in Bengal Government notification No. 13I., dated the 7th April 1931, at pages 450-51, Part I of the *Calcutta Gazette* of the 16th idem), is hereby published for the information of persons likely to be affected thereby.

2. The draft will be taken into consideration on or after the 10th September 1931, and any objections or suggestions received by the undersigned before that date will be considered:—

Draft amendments.

Schedule of rates of tolls.

Insert the words "and Chechri" after the words "at Amua" at the end of the last line of rule 12 of the said rules.

Establishment.

NOTIFICATION.

No. 18.—22nd August 1931.—The undermentioned officers of the Irrigation Department passed the half-yearly Professional Examination held on the 16th July 1931:—

Mr. H. W. Irwin, Assistant Executive Engineer.

Babu Dinendra Nath Dhar, Assistant Engineer.

H. C. V. PHILPOT,
Secy. to the Govt. of Bengal.

TREASURY NOTICES.

Barisal, the 17th August 1931.

Maulvi Mustafizur Rahaman Khan, Deputy Magistrate and Deputy Collector, Barisal, is placed in charge of the Bakarganj Treasury with effect from the 8th August 1931, and is authorised to draw bills on other treasuries.

J. T. DONOVAN, *District Officer,*
Bakarganj.

Orders by the Deputy Accountant-General, Bengal.

The Treasury, 15th August 1931.

It is notified that the refund order book No. 1674 of blue colour containing 50 vouchers is in use by the Income-Tax Officer, Military Circle, Meerut, with effect from 11th August 1931.

It is notified that the refund order book No. 500 containing 50 orders is in use by the Income-Tax Officer, Central Salaries Circle, Calcutta, with effect from 11th August 1931.

K. R. RAMA AYYAR,
Dy. Accountant-General, Bengal.

HIGH COURT NOTICES.

Civil.

The 21st August 1931.

No. 11298A.—Babu Bhuban Mohan Ray Chaudhuri, Munsif and Registrar, Court of Small Causes, Munshiganj, in the district of Dacca, is vested with the powers of a Judge of a Court of Small Causes for the trial of suits cognizable by such a Court up to the value of Rs. 20 within the local limits of the Munshiganj Small Cause Court.

By order of the High Court,
W. McC. SHARPE, *Registrar.*

Original Side.

Calcutta, the 17th August 1931.

The Hon'ble the Chief Justice has granted Mr. Satis Chandra Mitra, Registrar in Insolvency, High Court, Original Side, leave preparatory to retirement for six months, under Fundamental Rule 86 (*b*), with effect from the 22nd November 1931, viz., leave on average pay for four months, under Fundamental Rules 81 (*b*) (*ii*) and 82 (*b*), and leave on half average pay for the remaining period, under Fundamental Rule 81 (*d*).

By order,
MAURICE REMEDY, *Registrar.*

Calcutta Bar Council.

The 20th August 1931.

The following rule has, with the previous sanction of the High Court of Judicature at Fort William in Bengal, been framed by the Calcutta Bar Council under section 15 (*b*) of the Indian Bar Councils Act (XXXVIII of 1926):—

"An advocate of any other High Court in British India whose name is not entered on

the roll of advocates of this High Court may appear and plead in any particular case or cases in this High Court, with the previous written permission of the Hon'ble Chief Justice and not otherwise; save as aforesaid no such advocate shall practise in the High Court."

S. K. DUTT,
for Secy., Calcutta Bar Council.

ORDERS BY COMMISSIONERS OF DIVISIONS.

Burdwan Division—Chinsura.

No. 1650L.S.-G.—15th August 1931.—It is hereby notified for general information that, under rule 20 (*b*) of the rules for the management of charitable hospitals and dispensaries in Bengal, the following gentlemen have been appointed to be members of the committee for the management of the charitable dispensary at Badangunj in the district of Hooghly:—

The Subdivisional Officer, Arambagh.
The Circle Officer, Arambagh.
The Sub-Postmaster, Badangunj.
The President, Badangunj-Fului union board.
The President, Shyambazar union board.
Babu Bankim Chandra Ghosh.
Babu Ramlal Mondal.
Babu Dharmadas Dalal.
Munshi Nababdi Khan

No. 1653L.S.-G.—15th August 1931.—It is hereby notified for general information that, under rule 20 (*b*) of the rules for the management of charitable hospitals and dispensaries in Bengal, the following gentlemen have been appointed to be members of the committee for the management of the charitable dispensary at Khanakul in the district of Hooghly:—

The Subdivisional Officer, Arambagh.
The Circle Officer, Khanakul.
The Sub-Registrar, Khanakul.
The Officer-in-charge, Khanakul police-station.
Babu Kedar Nath Singha.
Babu Lalit Ranjan Chakravarty.
Babu Kunjabehari Bose.
Babu Narayandhan Batabyal.
The President, Atghora union board.
The President, Khanakul union board.
Maulvi Sofiar Rahaman Molla.
Babu Amritalal Bose.

No. 2453J.G.—16th August 1931.—Babu Shyamapada Bhattacharji, Sub-Deputy Collector and Circle Officer, Khatra, in the district of Bankura, is posted to the headquarters station of the same district on general duty.

No. 2458J.G.—16th August 1931.—Maulvi Shamsul Abedin, Sub-Deputy Collector and Sub-Deputy Magistrate, Howrah, is transferred to the Bankura district for employment as Circle Officer, Khatra, *vice* Babu Shyamapada Bhattacharji, reverted to general duty.

No. 2477J.G.—18th August 1931.—Babu Anubhuti Bhattacharji, Sub-Deputy Collector and Sub-Deputy Magistrate, Asansol, Burdwan, is allowed leave on average pay for eleven days from the 12th August to the 22nd August 1931 (inclusive), under rule 81 (*b*) (*ii*) of the Fundamental Rules.

No. 1699L.S.-G.—19th August 1931.—It is hereby notified for general information that, under rule 20 (*b*) of the rules for the management of charitable hospitals and dispensaries in Bengal, the following gentlemen have been appointed to be members of the committee for the management of the charitable dispensary at Dwarbasini in the district of Hooghly:—

The Subdivisional Officer, Hooghly.
The President, Dwarbasini union board.
The President, Satithan union board.
The President, Gossainmalipara union board
The Head Master, Dwarbasini High English School.
Babu Tarak Nath Mukherjee.
Syed Mazharul Haq.
Babu Nagendra Nath Adak.
Babu Sham Sundar Das.
Babu Narendra Nath Sen, B.L.

No. 1169M. — 22nd August 1931. — It is hereby notified for general information that Saturday, the 26th September 1931, has been fixed for holding a by-election for the election of a Commissioner for Ward No. II of the Ramjibanpur Municipality in the district of Midnapore, in place of Babu Ashutosh De, deceased.

L. B. BURROWS, *Commissioner (offg.).*

Birbhum, the 19th August 1931.

It is hereby notified for general information that a by-election will be held in the compounds of Murarai and Nalhati thanas on the 22nd September 1931, Tuesday, from 11 a.m. to 3 p.m., to fill up the vacancy caused by the death of Maulvi Shaik Jelani, an elected member of the Rampurhat local board for thanas Murarai and Nalhati (combined).

No. 8L.S.-G.—It is hereby notified for general information that, under section 13 of the Bengal Village Self-Government Act, 1919 (Bengal Act V of 1919), read with rule 36 of the rules for the election and appointment of members of union board, etc., Munshi Shaik Haru has been appointed by me to be a member of the Mongaldihi union board in police-station Illambazar in the Sadar subdivision of the district of Birbhum, *vice* Munshi Shaik Kobad, removed.

No. 9L.S.-G.—It is hereby notified for general information that, under section 13 of the Bengal Village Self-Government Act, 1919 (Bengal Act V of 1919), read with rule 35 of the rules for the election and appointment of members of union board, etc., Babu Syam Sundar Debarshi has been duly elected to be a member for Ward No. III of the Jhikoda union board in police-station Moureswar in the Rampurhat subdivision of the district of Birbhum, *vice* Babu Roma Prasanna Debarshi, deceased.

G. S. DUTT, *District Magistrate.*

Chittagong Division—Chittagong.

Noakhali, the 10th August 1931.

No. 7878J.—Under clause (*5*), rule 19 of the Bengal Electoral Rules, 1926, it is hereby notified for the information of all concerned that the returns of election expenses for the by-election of a member of the Bengal Legislative Council from the East Muhammadan constituency of Noakhali district were lodged with the undersigned Returning Officer by the candidates noted below on the dates noted against each—

Maulvi Faizer Rahaman Muktear—3rd August 1931.
Khan Bahadur Mahammud Abdul Momen—8th August 1931.

2. Every person paying a sum of Re. 1 only is entitled to inspect each of the returns noted above in the office of the District Magistrate, Noakhali, between the hours from 11 a.m. to 5 p.m. on office days.

B. R. SEN, *District Magistrate*
(*Returning Officer*).

Tippera, the 18th August 1931.

No. 4725M.—It is hereby notified for general information that, under section 13 of the Bengal Village Self-Government Act, 1919, read with section 6, clause (*2*) and rule 35 of the rules for the election and appointment of members of union boards, Babu Nirmal Chandra Gupta Sarma has been duly elected as a member of the Chunta union board in thana Sarail in the Brahmanbaria subdivision of the Tippera district, *vice* Babu Hemendra Chandra De Sarkar, deceased.

No. 4727M.—It is hereby notified for general information that, under section 13 of the Bengal Village Self-Government Act, 1919, read with section 6, clause (*3*) and rule 36 of the rules for the election and appointment of members of union boards, Munshi Martuz Ali has been appointed as a member of the Kalikatchha union board in thana Sarail in the Brahmanbaria subdivision of the Tippera district, *vice* Maulvi Abdul Mannaf, resigned.

C. G. B. STEVENS, *Dist. Magistrate.*

Dacca Division—Dacca.

No. 4234J.—19th August 1931.—It is hereby notified for general information that in exercise of powers delegated to me by the Bengal Government notification No. 3403-L.S.-G., dated the 1st December 1904, I do hereby sanction, under section 6 (*c*) of the Bengal Ferries Act, I of 1885, the establishment of the following new public ferries in the Bhola subdivision of the district of Bakarganj:—

(1) Special class ferry over Shahabajpur river between Rabipur and Char Krishnaproshad.

(2) Special class ferry over Shahabajpur river between Kanchanpur and Char Krishnaproshad.

(3) Second class ferry over Char Madras Done between Char Fasson and Char Madras.

(4) Second class ferry over Burirdone between Burirchar and Char Annandaprosad.

2. In exercise of the powers delegated to me by the Bengal Government notification No. 2141L.S.-G., dated the 20th July 1920, I direct, under section 35 of the aforesaid Act, that the said ferries shall be managed by the district board of Bakarganj and that the proceeds of the said ferries and all fines levied and compensation received under the said Act, in respect thereof, shall be paid into District Fund of Bakarganj, with effect from the date of this notification.

A. CASSELLS, *Commissioner* (*offg.*).

Faridpur, the 4th August 1931.

No. 5704J.—It is hereby notified for general information that, under section 13 of the Bengal Village Self-Government Act (Act V of 1919), Babu Amrita Lal Sarkar has been appointed by the District Magistrate of Faridpur to be a member of the Alipur union board in police-station Rajbari in the Goalundo subdivision of the Faridpur district, *vice* Babu Panchanon Dutta, deceased.

No. 5705J.—It is hereby notified for general information that, under section 13 of the Bengal Village Self-Government Act (Act V of 1919), Meser Ali Matbar has been appointed by the District Magistrate of Faridpur to be a member of the Nagerpara union board in police-station Gosairhat in the Madaripur subdivision of the Faridpur district, *vice* Munshi Sultan Hossain Talukdar, deceased.

No. 5706J.—It is hereby notified for general information that, under section 13 of the Bengal Village Self-Government Act (Act V of 1919), Babu Juran Chandra Bala has been duly elected to be a member of the Lakshmandia union board in police-station Baliakandi in the Goalundo subdivision of the Faridpur district, *vice* Babu Purna Chandra Das, deceased.

Faridpur, the 10th August 1931.

No. 5842J.—It is hereby notified for general information that—

(*a*) Under sub-section (*2*) of section 6 of the Bengal Village Self-Government Act, 1919 (Bengal Act V of 1919), the following gentlemen have been duly elected to be members of the Patta union board in police-station Pangsha in the Goalundo subdivision of the Faridpur district:—

Munshi Earaddin Biswas.
Munshi Mobarak Ali Biswas.
Munshi Mondir Mollah.
Munshi Kofiluddin Biswas.
Munshi Gowheruddin Biswas.
Munshi Abdul Wahed.

(*b*) Under sub-section (*3*) of section 6 of the Act, the following gentlemen have been appointed by the District Magistrate of Faridpur to be members of the said union board:—

Babu Panchanan Biswas.
Babu Anadi Charan Mazumdar.
Babu Mati Lal Biswas.

No. 5843J.—It is hereby notified for general information that—

(*a*) Under sub-section (*2*) of section 6 of the Bengal Village Self-Government Act, 1919 (Bengal Act V of 1919), the following gentlemen have been duly elected to be members of the Maurat union board in police-station Pangsha in the Goalundo subdivision of the Faridpur district:—

Babu Amulya Chandra Dutta.
Munshi Abdul Jalil Biswas.
Munshi Mojaharuddin.
Babu Jyotis Chandra Bhoumic.
Babu Kiron Chandra Ray.
Munshi Panju Khan.

(*b*) Under sub-section (*3*) of section 6 of the Act, the following gentlemen have been appointed by the District Magistrate of Faridpur to be members of the said union board:—

Babu Aghore Nath Roy.
Munshi Sonaullah Mridha.
Maulvi Mohammad Jasimuddin.

No. 5878J.—It is hereby notified for general information that, under section 13 of the Bengal Village Self-Government Act (Act V of 1919), Babu Kula Chandra Chaudhury has been appointed by the District Magistrate to be a member of the Ulpur union board in police-station Gopalganj in the Gopalganj subdivision of the Faridpur district, *vice* Babu Mati Lal Roy, resigned.

No. 5890J.—It is hereby notified for general information that, under section 13 of the Bengal Village Self-Government Act (Act V of 1919), Maulvi Abdur Razzak has been duly elected to be a member of the Banskandi union board in police-station Shibchar in the Madaripur subdivision of the Faridpur district, *vice* Munshi Eakub Sikdar, deceased.

No. 5891J.—It is hereby notified for general information that, under section 13 of the Bengal Village Self-Government Act (Act V of 1919), Babu Jitendra Chandra Das Poddar has been duly elected to be a member of the Tulasar union board in police-station Palong in the Madaripur subdivision of the Faridpur district, *vice* Babu Sachinandan Das Poddar, removed.

No. 5892J.—It is hereby notified for general information that—

(*a*) Under sub-section (*2*) of section 6 of the Bengal Village Self-Government Act, 1919 (Bengal Act V of 1919), the following gentlemen have been duly elected to be members of the Rudrakar union board in police-station Palong in the Madaripur subdivision of the Faridpur district:—

Babu Bani Lal Chakraborty.
Babu Jnanendra Chandra Roy.
Babu Sinath Pal.
Munshi Momtajuddin.
Babu Hemanta Kumar Chakravorty.
Munshi Khadem Hossein Talukdar.

(*b*) Under sub-section (*3*) of section 6 of the Act, the following gentlemen have been appointed by the District Magistrate of Faridpur to be members of the said union board:—

Munshi Harej Bepari.
Babu Thakurdas Chakraborty, B.A.
Munshi Sabar Ali Matbar.

Faridpur, the 12th August 1931.

No. 5927J.—It is hereby notified for general information that, under section 13 of the Bengal Village Self-Government Act (Act V of 1919). Munshi Anes Karikar and Munshi Rahenuddin Daria in Ward No. I and Munshi Shahar Ali Shaikh, Munshi Fahamuddin Gazi and Munshi Abdul Rashid Sikdar in Ward No. II have been elected in a by-election to be members of the Hiron union board in police-station Kotwalipara in the Gopalganj subdivision of the Faridpur district, *vice* Md. Mominuddin Daria and Babu Shashi Kumar Mukherjee in Ward No. I and Babu Ganga Charan Bhoumic, Babu Kali Das Dutta and Munshi Abbas Shaikh in Ward No. II, resigned.

A. C. DUTTA, *District Magistrate.*

Mymensingh, the 17th August 1931.

No. 631C.—It is hereby notified for general information that, under section 13 of the Bengal Village Self-Government Act, 1919 (Bengal Act V of 1919), read with rule 35 of the rules for the election and appointment of members of union boards, Rhamat Mondal has been duly elected to be a member of the Char Pakshimari union board in Sherpur police-station in the Jamalpur subdivision of the district of Mymensingh, *vice* Alep Sorcer.

No. 634C.—It is hereby notified for general information that, under section 13 of the Bengal Village Self-Government Act, 1919 (Bengal Act V of 1919), Munshi Nasiruddin Ahamed Khan has been appointed by the District Magistrate of Mymensingh to be a member of the Barabag union board in police-station Kishoreganj in the Kishoreganj subdivision of the Mymensingh district, *vice* Munshi Abdul Majid Bhuya, deceased.

No. 637C.—It is hereby notified for general information that, under section 13 of the Bengal Village Self-Government Act, 1919 (Bengal Act V of 1919), the following gentleman has been duly elected to be a member of the Satpoa union board in the police-station Sarisabari in the Jamalpur subdivision of the Mymensingh district, *vice* Babu Priya Nath Roy, resigned—

Munshi Abdul Aziz.

Mymensingh, the 20th August 1931.

No. 663C.—It is hereby notified for general information that, under section 6, clause 4, read with section 13 of the Bengal Village Self-Government Act, 1919 (Bengal Act V of 1919), Maulvi Aptabuddin Thakur has been appointed by the District Magistrate of Mymensingh to be a member of the Barhatta union board, police-station Barhatta in the Netrakona subdivision of the Mymensingh district, *vice* Sayedali, an elected member, deceased.

H. GRAHAM, *District Magistrate.*

Dacca, the 24th August 1931.

No. 5376M.—It is hereby notified for general information that—

(*a*) Under sub-section (*2*) of section 6 of the Bengal Village Self-Government Act, 1919 (Bengal Act V of 1919), the following gentlemen have been duly elected to be members of the Dhamgar union board in police-station Baidyerbazar in the Narayanganj subdivision of the Dacca district:—

Munshi Asrab Ali.
Babu Kulada Kanta Roy.
Munshi Abdur Rahman Bhuiya.
Munshi Abdur Rahman Molla.
Munshi Saizuddin.
Babu Bipin Chandra Kushari.

(*b*) Under sub-section (*3*) of section 6 of the Act, the following gentlemen have been appointed by me to be members of the said union board:—

Munshi Babar Ali.
Babu Bharat Chandra Roy.
Munshi Dil Muhammed.

L. G. DURNO, *District Magistrate.*

Presidency Division—Calcutta.

No. 2119L.S.-G.—18th August 1931.—In exercise of the powers conferred upon me by section 25 of the Bengal Local Self-Government Act, III (B.C.) of 1885, as amended, I approve the election of the following gentlemen as Chairmen of the local boards named below in the district of Murshidabad:—

Sadar local board.

Babu Bisweswar Roy.

Lalbagh local board.

Babu Ashutosh Majumdar.

Kandi local board.

Babu Sarat Chandra Trivedi.

Jangipur local board.

Maulvi Syed Abul Fazle.

F. W. ROBERTSON, *Commissioner (offg.).*

Krishnagar, the 17th August 1931.

No. 5275J.G.—It is hereby notified for general information that—

(*a*) Under sub-section (*2*) of section 6 of the Bengal Village Self-Government Act, 1919 (Bengal Act V of 1919), the gentlemen as per list A have been duly elected to be members of the union boards in police-stations Chuadanga and Damurhuda in the Chuadanga subdivision of the Nadia district.

(*b*) Under sub-section (*3*) of section 6 of the Act, the gentlemen as per list B have been appointed by me to be members of the said union boards.

(*c*) Under sub-section (*4*) of section 6 of the Act, the gentlemen as per list C have been appointed by me to be members of the union boards mentioned therein.

List A.

Chuadanga thana.

Chuadanga union board.

Ward I.

Maulvi Aftab Hossain Joardar.
Munshi Sajjad Hossain Joardar.

Ward II.

Munshi Rabiul Haque Mallik.
Munshi Abbasali Biswas.

Ward III.

Munshi Ulfat Hossain Joardar.
Munshi Rajabali Biswas.

Alukdia union board.

Ward I.

Munshi Shamsuddin Ahmed.
Munshi Sahabatali Biswas.

Ward II.

Babu Ramkali Biswas.
Babu Kanai Lal Mandal.

Ward III.

Munshi Muhammad Elahi Baksh Malita.
Munshi Muhammad Eaqub Hossain.

Sumirdia union board.

Ward I.

Babu Jagadindra Prosad Roy.
Munshi Hossain Bux Biswas.

Ward II.

Babu Rasik Lal Biswas.
Munshi Munsurali Biswas.

Ward III.

Munshi Sabdar Hossain Biswas.
Munshi Afazuddin Ahmed

Mominpur union board.

Ward I.

Munshi Muhammad Jabedali.
Munshi Mahatabuddin Ahmed.

Ward II.

Babu Amulya Kumar Maitra.
Babu Jitendra Nath Maitra.

Padmabil union board.

Ward I.

Babu Amiya Bhusan Chaudhury.
Babu Hrishikesh Chaudhury.

Ward II.

Munshi Meserali Joardar.
Munshi Rajali Biswas.

Ward III.

Babu Balaram Biswas.
Munshi Fatik Mandal.

Shankar Chandra union board.

Ward I.

Munshi Ebrahim Biswas.
Babu Nani Gopal Biswas.

Ward II.

Babu Shashi Bhusan Chatterjee.
Babu Gangapada Mitra.

Ward III.

Babu Shambhu Nath Mukherjee.
Babu Panchanan Ghosh.

Nehalpur union board.

Ward I.

Munshi Budhai Mandal.
Babu Nani Gopal Saha.

Ward II.

Babu Kunja Behari Mandal.
Babu Benode Behari Das Bairagya.

Ward III.

Munshi Muhammad Ali Molla.
Babu Panchanan Garai.

Begampur union board.

Ward I.

Babu Paresh Nath Bose.
Babu Nalini Kanta Biswas.

Ward II.

Munshi Ratu Mandal.
Babu Rash Behari Biswas.

Kutubpur union board.

Ward I.

Babu Hiralal Biswas.
Babu Nimai Charan Ghosh.

Ward II.

Munshi Jonabali Biswas.
Sukur Muhammad Biswas.

Ward III.

Babu Nalini Mohan Banerjee.
Babu Behari Lal Saha.

Titudaha union board.

Ward I.

Babu Haridas Bhattacharyya.
Babu Brindaban Mandal.

Damurhuda thana.

Natipota union board.

Ward I.

Babu Saukhindra Mohan Sarkar.
Babu Saurendra Mohan Sarkar.

Ward II.

Babu Shachindra Nath Biswas.
Babu Haripada Biswas.

Ward III.

Munshi Mafizuddin Ahmed.
Munshi Muhammad Fatehali.

Natudah union board.

Ward I.

Munshi Dabiruddin Mian.
Babu Panchanan Dutta.

Ward II.

Babu Surendra Nath Ghosh.
Munshi Muhammad Sadek Hossain Mian.

Ward III.

Muhammad Ebrahim Khan.
Babu Satyendra Nath Mukherjee.

Pirpurkulla union board.

Ward I.

Munshi Jahiruddin Mandal.
Munshi Sadek Hossain Biswas.
Babu Provash Chandra Sinha.

Ward II.

Munshi Didar Bux Biswas.

Kurulgachi union board.

Ward I.

Babu Shashi Bhusan Roy.
Babu Saroj Kumar Ganguly.

Ward II.

Munshi Sahiruddin Ahmed.
Babu Basanta Kumar Roy.
Babu Sukumar Roy.
Babu Nagendra Gopal Ganguly.

Damurhuda union board.

Ward I.

Roy Gour Mohan Sen.
Dr. Kanai Lal Das.

Ward II.

Babu Nishkalanka Sinha Roy.
Babu Pramatha Bhusan Biswas.

Ward III.

Munshi Rabbani Mandal.
Babu Srihari Biswas.

List B.

Chuadanga thana.

Chuadanga union board.

Babu Sudhindra Nath Acharyya.
Rai Jogendra Nath Sinha Bahadur.
Babu Srish Chandra Roy.

Alukdia union board.
Babu Narendra Nath Chaudhury.
Babu Amarendra Nath Sanyal.
Munshi Nasimuddin Joardar.

Sumirdia union board.
Maulvi Muhammad Eshaque.
Khandkar Sazedar Rahman.
Babu Upendra Nath Chakravarty.

Mominpur union board.
Munshi Muhammad Kayemali.
Babu Rama Nath Joardar.
Babu Matilal Brahmachari.

Padmabil union board.
Munshi Abdul Aziz Joardar.
Babu Rajani Kanta Pal.
Babu Abhilash Chandra Pramanick.

Shankar Chandra union board.
Babu Surendra Nath Mitra.
Munshi Fazarali Biswas.
Munshi Sabhai Biswas.

Nehalpur union board.
Babu Ashutosh Biswas.
Babu Nalini Kanta Ukil.
Munshi Jahiruddin Joardar.

Begampur union board.
Babu Sayaram Roy.
Babu Nimai Chand Pramanick.
Munshi Haranali Molla.

Kutubpur union board.
Munshi Asraf Biswas.
Munshi Easin Molla.
Babu Bepin Behari Biswas.

Titudaha union board.
Munshi Imanali Mandal.
Munshi Heraj Mallik.
Babu Tinkari Biswas.

Damurhuda thana.

Natipota union board.
Babu Mahi Mohan Sarkar.
Munshi Uziruddin Biswas.
Munshi Rahim Baksh Biswas.

Natudah union board.
Babu Abinash Chandra Das.
Babu Nalinakshya Biswas.
Munshi Kalimuddin Ahmed.

Pirpurkulla union board.
Babu Sarat Chandra Sinha.
Babu Kedarnath Haldar.
Munshi Piziruddin Biswas.

Kurulgachi union board.
Babu Jamini Mohan Mazumdar.
Munshi Rahim Mir.
Munshi Pataluddin Shah.

Damurhuda union board.
Babu Umapada Bhattacharyya
Munshi Bhaduruddin Khan.
Munshi Mobarak Ali Mandal.

List C.

Chuadanga thana.

Mominpur union board.

Ward III.
Munshi Jonabali Khandkar.
Babu Lakshmi Kanta De.

Begumpur union board.

Ward III.
Munshi Mozaharali Mandal.
Babu Nityananda Biswas.

Titudaha union board.

Ward II.
Babu Taraprosad Roy.
Munshi Haran Ali Mandal.

Ward III.
Babu Jitish Chandra Chatterjee.
Munshi Herajtulla Biswas.

Damurhuda thana.

Pirpurkulla union board.

Ward II.
Babu Hazari Lal Biswas.
Munshi Monoruddin Biswas.

T. C. ROY, *District Magistrate, Nadia.*

Khulna, the 20th August 1931.

It is hereby notified for general information that, under sub-section (*4*) of section 6 of the Bengal Village Self-Government Act (Bengal Act V of 1919) read with section 13 of the said Act and rule 35 of the rules for the election and appointment of members, etc., under the said Act, the District Magistrate of Khulna has appointed Munshi Abdul Kader Shaikh to be a member of Maghia union board in Kachua police-station of Bagerhat subdivision in the district of Khulna, *vice* Babu Satyendra Narayan Roy Chawdhury, removed under section 12 (*1*) (*d*) of the Bengal Village Self-Government Act (Bengal Act V of 1919).

E. W. HOLLAND, *District Magistrate.*

Alipore, the 21st August 1931.

Under sub-section (*2*) of section 6 of the Bengal Village Self-Government Act, 1919 (Bengal Act V of 1919), the gentlemen as per list A have been duly elected to be members of the several union boards in thanas Baraset, Deganga and Rajarhat in the subdivision of Baraset in the district of 24-Parganas:—

List A.

Baraset Thana.

Khilkapore union board.

Ward I.
Munshi Ishaque Mondal.
Babu Bejoy Krishna Mandal.

Ward II.

Munshi Ela Bux Mandal.
Munshi Musharraf Hossain.

Ward III.

Babu Jatindra Mohan Chakravorty.
Munshi Abdul Majid.

Madhyamgram union board.

Ward I.

Munshi Sarihaddin Ahmed.
Dr. Abdul Bari.
Babu Lalit Mohan Biswas.

Ward II.

Munshi Golam Samdani Mondal.
Munshi Sukur Ali Mandal.

Ward III.

Babu Khirode Nath Mittra.

Chandigor-Rohand union board.

Ward I.

Munshi Abdur Rahaman Mandal.
Munshi Abdul Wahed.

Ward II.

Munshi Khadem Hossain.
Munshi Ashraf Mandal.

Ward III.

Munshi Mahammad Yasin.
Munshi Shaikh Lutfar Rahaman.

Kemia-Khamarpore union board.

Ward I.

Babu Panchanon Chatterjee.
Babu Prandhan Banerjee.

Ward II.

Babu Gopal Chandra Bannerjee.
Babu Amulya Ratan Ghosh.

Ward III.

Babu Mani Mohan Ghosh (Kola).
Babu Panchanon Ghosh.

Kadambagachi union board.

Ward I.

Munshi Abdur Rauf Molla.
Munshi Golam Razzaque Molla.

Ward II.

Munshi Shaikh Fazer Ali.
Munshi Syed Ali Sardar.

Ward III.

Babu Sanaton Ghosh Mauri.
Babu Hriday Ghosh Mauri.

Chota Jagulia union board.

Ward I.

Munshi Abdul Aziz Mondal.
Munshi Dilwar Mallik.

Ward II.

Munshi Abdul Jalil Biswas.

Ward III.

Munshi Panchu Mondal.
Munshi Matiar Rahman Goldar.
Munshi Belat Ali Mandal.

Kasimpore union board.

Ward I.

Babu Amulya Chandra Bhattacharjee.

Ward II.

Babu Pulin Behari Chatterjee.
Babu Birendra Nath Mukherjee.
Babu Bhupati Nath Chatterjee.

Ward III.

Munshi Jamat Ali Mandal.
Babu Paritosh Ghosh.

Falti Beliaghata union board.

Ward I.

Munshi Syed Ahmed.
Munshi Muhammad Dilwar Buksh.

Ward II.

Munshi Sultan Ahmed.
Babu Purna Chandra Ghosh.

Ward III.

Munshi Hatem Ali Mondal.
Munshi Muhammad Mohar Ali Sahaji.

Dadpore union board.

Ward I.

Munshi Serajul Haque.
Munshi Abbas Mandal.

Ward II.

Munshi Israil Mandal.
Munshi Anwar Ali.

Ward III.

Babu Behari Lal Ghosh.
Munshi Haji Manik Mandal.

Kirtipur union board.

Ward I.

Babu Charupada Bangal.
Munshi Hatem Mandal.

Ward II.

Babu Ambika Charan Ghosh.
Munshi Shaikh Sahadat Hossain.

Ward III.

Munshi Lal Mahammad Saha.
Munshi Omar Ali Mallik.

Deganga police-station.

Chakla union board.

Ward I.

Munshi Baharuddin Mondal.
Munshi Din Muhammad Mondal.

Ward II.

Dr. Rausan Ali Sahaji.
Babu Amulya Nath Roy.

Ward III.

Babu Adhar Chandra Das.
Muhammad Muzaffar Hossain.

Amulia union board.

Ward I.

Seikh Sakhawat Hossain.
Munshi Eja Bux Mondal.
Muhammad Anwar Ali

Ward II.

Muhammad Afsaruddin.
Sheikh Jaha Bux.
Abdul Aziz Choudhuri.

Chourashi union board.

Ward I.

Babu Kalidas Mukharjee.
Munshi Abdur Razzaque Molla.

Ward II.

Sheikh Lal Muhammad.
Munshi Muhammad Rahatulla.

Ward III.

Munshi Sultan Mondal.
Sheikh Basarat Molla.

Shohai-Swetpore union board.

Ward I.

Babu Girindra Nath Mondal.
Babu Aghore Chandra Mondal.

Ward II.

Munshi Ajehar Mondal.
Babu Kunja Bihari Ghosh.

Ward III.

Munshi Sheikh Hachibaddin.
Babu Radhika Prosad Roy.

Hadipur-Jhikra union board.

Ward I.

Babu Indra Bhusan Choudhuri.
Munshi Din Muhammad Mondal.

Ward II.

Sheikh Golam Majed.
Munshi Mowla Bux Mondal.

Ward III.

Sheikh Abdul Aziz.
Munshi Akkas Ali Sardar.

Champatala union board.

Ward I.

Munshi Atiar Rahaman Biswas.
Sheikh Gopal Mondal.
Munshi Muhammad Sahaji.

Ward II.

Dr. Muhammad Safir.
Sheikh Sahiruddin.
Munshi Iasin Ahmed.

Deulia union board.

Ward I.

Sheikh Abdul Adud.
Dr. Abdul Bari.

Ward II.

Munshi Muhammad Sadaraddin Sardar.
Munshi Ahad Bux Molla.

Ward III.

Babu Sailendra Nath Gargari.
Babu Bholanath Basu.

Deganga union board.

Ward I.

Sayed Nazra Moslem.
Sheikh Nur Hossain.

Ward II.

Kazi Ali Muhammad.
Sheikh Abdul Fattah.

Ward III.

Dr. Ahmed Hossain.
Saib Ahmed.

Nurnagar union board.

Ward I.

Babu Ganesh Chandra Chakravarti.
Munshi Nawabjan Sarkar.
Abdul Sattar Mondal.

Ward II.

Muhammad Mowla Bux.
Munshi Tafajjel Baidya.
Sajet Hossain Tarafdar.

Rajarhat police-station.

Kaikhali-Hatiara union board.

Ward I.

Babu Paresh Chandra Chakravarti.
Babu Nil Chandra Ghosh.

Ward II.

Babu Binode Bihari Biswas.
Rahim Bux Tarafdar.

Ward III.

Maulvi Muhammad Ejaharul Haque.
Babu Jogendra Nath Datta.

List B.

Under sub-section (*3*) of section 6 of the Bengal Village Self-Government Act, 1919 (Bengal Act V of 1919), the following gentlemen have been appointed to be members of the undermentioned union boards in police-station Baraset in the Baraset subdivision of the 24-Parganas district:—

Khilkapur union board.

Babu Bibhuti Bhusan Roy.
Babu Bishnu Charan Ghosal.
Munshi Fazer Ali.

Madhyamgram union board.

Munshi Sheikh Motaleb.
Babu Kamal Krishna Mukherjee.
Dr. Kanai Lal Mukherjee, M.B.

Chandigarh Rohanda union board.

Babu Jogesh Chandra Bhattacharjee.
Babu Thakurdas Ghosal.
Munshi Johar Ali.

Kamia Khamarpara union board.
Munshi Sheikh Gayasuddin Mandal.
Munshi Sheikh Romjan Mandal.
Babu Sarat Chandra Mukherjee.

Kadambagachi union board.
Babu Rajendra Nath De Sarkar.
Babu Aswinikumar Ray.
Munshi Mohammad Surat Ali.

Choto Jagulia union board.
Babu Sailendra Nath Nath.
Babu Nripendra Nath Bose.
Babu Manmatha Nath Mukherjee.

Kasimpur union board.
Babu Barada Kanta Ghosh.
Babu Rakhal Chandra Pal.
Munshi Sheikh Baharaddi.

Falti Boliaghatta union board.
Munshi Lal Mahammad.
Babu Dwijabar Karmakar.
Munshi Golam Rabbani.

Dadpur union board.
Munshi Abdul Aziz.
Munshi Ibrahim Mandal.
Ambica Charan Ghosh.

Kirtipur union board.
Babu Nanda Lal Ghosh.
Aminuddin Mondal.
Munshi Golam Rasul.

Rajarhat police-station.

Kaikhali-Hatiara union board.
Babu Suresh Chandra Ghosh, M.A.
Babu Kshetragopal Roy.
Munshi Sher Ali Naskar.

Deganga police-station.

Chakla union board.
Dr. Mominal Haque.
Jamshed Ali Mondal.
Babu Kanak Chandra Mazumdar.

Amulia union board.
Muhammad Rausan Ali Mondal.
Munshi Mogaljan Mondal.
Babu Srimanta Nath.

Chourashi union board.
Munshi Mowla Bux.
Munshi Ramjan Ali Mondal.
Babu Tarak Nath Ghosh.

Shohai-Swetpur union board.
Munshi Sheikh Ramjan Ali.
Babu Ashutosh Ganguli.
Babu Bipin Bihari Ghosh.

Hadipur Jhikra union board.
Babu Ajit Kumar Mullick, B.L.
Babu Surendra Nath Tarafdar.
Khoda Bux Dewan.

Champatala union board.
Babu Shib Chandra Dutta.
Babu Haripada Barik.
Babu Manmatha Nath Sadhukhan.

Deulia union board.
Babu Ashutosh Moite.
Babu Akshay Kumar Mondal.
Muhammad Hanif Doctor.

Deganga union board.
Babu Ramranjan Mitra.
Babu Kenaram Roy.
Kazi Ashruffuzzaman.

Nurnagar union board.
Dr. Haripada Ghosh.
Babu Banku Behari Ghosh.
Munshi Sarabat Mondal.

K. L. MUKHARJI, *Addl. District Magistrate.*

Rajshahi Division—Jalpaiguri.

No. 72M.C.T.—15th August 1931.—It is hereby notified for general information that at the general election of the Commissioners of the Dinajpur Municipality held on the 24th March 1931, the following gentlemen were duly elected:—

Ward A.
Babu Atul Chandra Boral.
Babu Chandra Kanta Das.
Maulvi Aftabuddin Ahmed.

Ward B.
Babu Suresh Chandra Sen Gupta.
Babu Saskaran Dugar.
Babu Jogindra Chandra Chakravorti.
Babu Nalini Mohan Sinha.

Ward C.
Maulvi Kader Baksh.
Babu Ashutosh Guha.

Ward D.
Muhammad Abdul Kader Mia.
Babu Nisi Kanta Roy Chaudhuri.
Babu Nishitha Nath Kundoo.

It is also hereby notified for general information that at the general election of the Commissioners in Ward E of the Dinajpur Municipality held on the 27th July 1931, the following gentlemen were duly elected:—

Babu Gouranga Sundar Mitra.
Babu Sukumar Sen.

No. 3185J.—20th August 1931.—Babu Hari Charan Banerjee, Sub-Deputy Collector, Balurghat, Dinajpur, is allowed leave on average pay for six weeks, with effect from the 3rd September 1931, under rule 81 (*b*) (*ii*) of the Fundamental Rules.

No. 3196J.—20th August 1931. — Babu Manindra Nath Basu, Sub-Deputy Collector, Malda, is allowed leave on average pay for six weeks, with effect from the 24th July 1931, under rule 81 (*b*) (*ii*) of the Fundamental Rules.

No. 3235J. — 20th August 1931.—Maulvi Mohammad Mohsin, Sub-Deputy Collector, Dinajpur, is transferred to the Thakurgaon subdivision of that district for employment as Circle Officer, Birganj.

No. 3239J. — 20th August 1931.—Maulvi Saleh Abdur Rahim, Sub-Deputy Collector and Circle Officer, Birganj, in the Thakurgaon subdivision of the Dinajpur district, is transferred to Thakurgaon to work as Circle Officer.

No. 2907M.—21st August 1931.—The following draft by-laws have been framed by the district board of Jalpaiguri under section 139 of the Bengal Local Self-Government Act, 1885 (Bengal Act III of 1885), as amended by Act I of 1914. It is proposed to confirm the said by-laws under clause 2 of the said section and they are published for the information of persons likely to be affected thereby.

2. The draft by-laws will be taken into consideration on the 7th October 1931, and any objections or suggestions received by the undersigned through the Magistrate of the district before that date will be duly considered:—

Draft By-laws.

Definitions.

The definitions given of "cattle," "reserved tank or well," "slopes," "road" in Local Self-Government Act and stated here below are adopted.

"Cattle" has the same meaning as in the Cattle Trespass Act, 1871;

"Reserved tank or well" means a tank or well which the district board has set apart under section 90 of the Bengal Local Self-Government Act of 1885 by public notice for the supply of water for drinking and for culinary purposes, and includes any reservoir, or part of any river, khal or other channel so set apart, and a notice board on the edge of a "reserved tank" or "reserved well" containing the words "reserved tank or reserved well" or words to that effect, shall be deemed to be sufficient notice for the purpose of this definition;

"Slopes" of a reserved tank or well include all places from which water can flow directly into such tank or well;

"Road" means a road vested in, or under the control and administration of, the district board or a local board, and includes—

(*a*) a village road;

(*b*) the slope, berm, borrow-pits and side drains of a road; and

(*c*) all land vested in, or under the control and aministration of, the district board or a local board, and attached to a road.

16. No person shall, on any road, by means of any building (whether on or overhanging the road), any well, rail, post, fence, pit, embankment or ditch, or any other obstruction or by means of any cut, drain or watercourse intended for the purpose of drainage or irrigation, or by exposing thereon any goods for sale or by placing thereon any substance or material,—

(*a*) without the permission of the Chairman or Vice-Chairman of the district board or a local board, or the District Engineer, make or cause any encroachment, or

(*b*) obstruct traffic, or

(*c*) cause any inconvenience to passengers, or

(*d*) hinder or impede the flow of water,

(*e*) hold a mela or jatra or construct or add to a pucca structure for the purpose of public worship.

17. **Sale, collecting or gathering of articles in vicinity of road.**—No person shall expose or place any article for sale in any bazar or market in the vicinity of any road, or on any road or its slope or side lands or on any culvert or platform over any drain or collect or gather any articles in the vicinity of a road, so as to interfere with the traffic of the road.

18. **Cutting of plants, trees or hedges obstructing road or drain.**—Any person in possession of, or having control over, any plant, trees or hedges which obstruct, overhang or overshadow any road, or any public drain or sluice, or any drain which is connected with a public drain, shall, if so required by notice in writing, signed by the Chairman or the Vice-Chairman of the district board or a local board, or by the District Engineer, cut down, prune or trim such plants, trees or hedges, within the period, and in the manner, prescribed in such notice.

19. (1) **Damage to bridges, culverts, or causeways in road.**—No person shall destroy or damage, or cause to be destroyed or damaged, any bridge, culvert or cause-way built on or across any road.

(2) No person shall erect any fence or other object on, or before or close to the opening of, any such bridges, culvert or cause-way for the purpose of fishing or for any other purpose, so as to impede the free flow of water thereunder, or so as to cause damage thereto.

(3) No person shall cast nets for fishing purposes on any such bridge or culvert.

20. **Damage to fences, posts, soil, turf or grass on road.**—No person shall—

(*a*) destroy or damage, or cause to be destroyed or damaged, any fence or post or notice board or danger light erected on any road; or

(*b*) dig, scrape, uproot or remove any plants, soil, turf or grass or any material collected from any part of a road;

(*c*) throw dust or rubbish or collect sweepings or manure on a road.

21. (1) **Channel across road.**—No person shall cut a channel, or convey water by a channel, across a road, except with the permission of the Chairman or Vice-Chairman of the district board, or a local board, or the District Engineer, and in such manner as he may prescribe.

(2) Any person who has been permitted by the Chairman or Vice-Chairman of the district board or a local board, or by the District Engineer, to cut a channel across a road, shall, at the time prescribed by him, cover or refill the channel so as to restore the road to its former condition.

(3) Any person who has a prescriptive right to keep a channel open for carrying water across a road shall keep the channel in proper order, so as to prevent danger or inconvenience to the public.

22. **Obstruction of water-way adjoining road.**—No person shall obstruct any water-way adjoining a road, so as to injure or tend to injure the road or otherwise to render the road impassable.

23. (1) **Excavation on or near road.**—No person shall make any excavation on any road, or any hole, pit, tank or well within fifteen feet of any road, without the permission of the Chairman or Vice-Chairman of the district board or a local board or the District Engineer.

(2) Every person by whom, or by whose direction, any hole, pit, tank or well has been excavated within fifteen feet of a road shall be bound to take such order therewith as will prevent damage to, or erosion of, the road.

24. **Protection of excavations on or near road.**—The owner or occupier of any tank, well, or other excavation on or near the side of any road shall be bound to fence in or duly protect such excavation in such manner as may be directed by notice signed by the Chairman or Vice-Chairman of the district board or a local board.

25. **Use of roads, bridges, culverts or canals while closed to traffic.**—No person shall pass over, or drive any animal or vehicle over, any road, bridge, culvert or canal, so as to injure the same, while it is under construction or repair or is affected by flood or is otherwise rendered unfit for traffic and is closed to traffic under the orders of the Chairman of the district board or a local board, or (in emergent cases, pending application to such Chairman) of the District Engineer, without the written permission of the Chairman, district board or local board; no person shall drive a motor bus or motor lorry over any road declared by the Chairman of the district board or local board to be unfit for such traffic.

26. **Discharge of rainfall from roof to road.**—No person shall, without the permission of the Chairman or Vice-Chairman of the district board, or a local board, or the District Engineer, allow the rainfall from the roof of any building owned or occupied by him to be discharged upon any road by means of a spout or other thing intended for the conveyance of water.

27. **Flow of filth on to road.**—No person shall allow the water of any privy, or any matter offensive or deleterious to health, to flow on any road.

28. **Removal of trees or erections falling on to road.**—Any person owning or possessing a tree or a house, wall or other erection which has fallen or part of which has fallen on to a road shall, if so required by notice in writing signed by the Chairman or Vice-Chairman of the district board or a local board, or by the District Engineer, remove such trees, house, wall, erection or part, within the period prescribed in such notice.

29. **Curing hides on or near road.**—No person shall cure hides on or near any road.

30. **Slaughter of animals, cleaning of carcasses, etc., on or near road.**—No person shall slaughter animal, or clean any carcasses, or collect bones, on or near any road.

31. **Placing or burning of bodies on road.**—No person shall place, burn or bury any corpse or the dead body of any animal on or near any road.

32. **Steeping offensive matter in road side drain, pit or excavation.**—No person shall steep any jute, hemp, bamboos, hides or other offensive matter in any drain, borrow-pit or excavation at the side of any road.

33. (1) **Rule of the road.**—Any person driving a vehicle along a road, and meeting another vehicle, shall keep on the left or near side of the road, so as to allow sufficient room for the other vehicle to pass.

(2) No person driving a vehicle along a road and overtaking another vehicle shall attempt to pass the latter vehicle otherwise than on the right or off side of the road.

34. **Freedom of roads.**—No person shall prevent any other person from passing along a road, or shall otherwise interrupt the free use of a road.

35. (1) **Care of animals on road.**—No person in charge of, or having control over, any animal used for riding or draught shall allow such animal to stand or wander on any road without a rider or driver.

(2) No person in charge of, or having control over, any cattle shall allow such cattle to stray or lie on any road so as to cause inconvenience or danger to any person travelling on the road.

(3) No person shall tether any cattle on, or within reach of, a road, or stall cattle or allow cattle to graze on a road.

36. (1) **Care of vehicles on road.**—No person shall drive or have in his charge on any road more than one vehicle at a time.

(2) No person in charge of, or having control over any vehicle shall allow it to stand unattended on any road.

(3) No person shall leave a vehicle standing on a road for any longer time than is necessary for loading or unloading it.

(4) No person shall drive upon a road any vehicle laden with bamboos, planks or other materials of a similar character which exceed twelve feet in length and project beyond the vehicle, unless the vehicle be accompanied also by another person.

(5) All owners and drivers of vehicles loaded with bricks or other materials shall be responsible for their being so secured that the contents thereof may not fall down on any road.

(6) If any vehicle breaks down on a road, the driver shall remove it to the edge of the road without delay, and shall, within a reasonable time, remove from the road all materials (if any) which have fallen from the vehicle, and shall place the vehicle in such a position that it will not obstruct traffic.

(7) No person shall lead or drive any vehicle up or down the slopes of any road, except at crossings fixed by the district board.

37. **Carrying bamboos or bullahs on cart on road.**—No person shall carry bamboos or bullahs on a cart on any road in such a manner as to scrape the road, or to cause injury or annoyance, or risk of injury, to travellers thereon.

38. **Separate tracks for cart traffic and carriage traffic.**—Where separate tracks on roads have been set apart for carts and carriages, respectively, no carts shall be permitted to pass over the portion reserved for carriages.

39. **Transport of heavy machinery over bridge.**—No person shall transport heavy machinery over a timber bridge so as to injure the bridge.

40. **Lighting of vehicles on road.**—Every carriage including a spring ekka (tum tum) drawn by a horse or horses, every wagon drawn by any other animals or propelled by motive power, and every motor car shall carry two conspicuous lights, one on either side, and every two wheeled cart and springless (country) ekka and every bicycle, tricycle and multicycle shall carry one conspicuous light, when travelling on a road between dusk and dawn, except on clear moonlight nights.

41. **Care of children on roads.**—No parent, or other person for the time being in charge, of any child under five years of age shall allow such child to stray on any road so as to cause obstruction or risk of obstruction to traffic.

42. **Nuisance on roads.**—No person shall commit a nuisance on any road.

43. **Tapping, or taking fruit from, trees on road.**—No person shall tap any date or palm tree, or remove fruit from any tree, planted by, or under the control of, the district board or any local board, without a lease or written permission previously obtained from the Chairman of the district board or local board.

Fires.

44. **Lighting of fires.**—No person shall light a fire in any unenclosed place within ten yards of any wooden bridge vested in the district board, or within fifty yards of any inspection or dak bungalow vested in the district board or a local board.

Water Supply Reserved for drinking and Culinary purposes.

45. **Taking of water.**—No person shall take water from a reserved tank or well, except for drinking of water or culinary purposes, save with the express permission of district board or a local board.

46. **Bathing or washing.**—No person shall—

(*a*) bathe or wash any portion of his own body or the body of any other person; or

(*b*) wash clothes; or

(*c*) wash any cattle or other animal; or

(*d*) allow any of his ducks, geese or other birds to enter the water,

in any reserved tank or well, or upon any of the banks, slopes, or sides of any reserved tank or well.

47. **Fouling of water.**—No person shall—

(*a*) commit any nuisance in, or on the banks or slopes or sides of, any reserved tank or well, or

(*b*) throw any filthy substance thereinto, or

(*c*) in any way pollute the water thereof, or

(*d*) allow the water of any sink, sewer, cesspool or privy, or any offensive matter belonging to him or being on his land, to flow thereinto,

(*e*) bury any dead body on the banks or slopes of it.

Explanation—Steeping jute or bamboos in a reserved tank amounts to an offence against this by-law.

48. **Removal of earth or grass from the sides or slopes.**—No person shall cut sods or grass, or remove earth or grass from, or otherwise damage, the sides or slopes of any reserved tank, without the express permission of the district board or a local board.

49. **Overhanging trees or vegetation.**—No person shall allow any trees, bamboos or other vegetation growing on land in his occupation to overhang any reserved tank or well so as to foul the water thereof, or shall fail to cut and remove the same after reasonable notice in that behalf from the district board or a local board.

50. **Cultivation on banks, sides or slopes of reserved tank or well.**—No person shall cultivate the banks, sides or slopes of a reserved tank or well, except in such manner as may be approved by the district board or a local board or a union committee.

51. **Building on banks, sides or slopes of reserved tank or well.**—No person shall erect any hut or house upon the banks, sides or slopes of a reserved tank or well without the permission of the district board or a local board or a union committee.

52. **Dams, stakes and fishing apparatus.**—No person shall construct dams, fix stakes, or place fishing nets or apparatus across, or in, any reserved tank or well, or any part of a river, khal or other channel set apart under section 90 of the Bengal Local Self-Government Act of 1885 for the supply of water for drinking and culinary purposes.

53. **Fishing.**—No person shall catch or attempt to catch fish in a reserved tank or well without the permission of the district board or a local board or a union committee.

54. No person shall interfere with any boundary marks of road side lands, mile stones or posts on district board roads.

55. No person shall make any aerated water or ice for the purpose of sale without first boiling it.

56. No person shall retain or sell clothing found on the dead body of a person who has died of small-pox, cholera or other infectious diseases or prevent destruction of the same by officers of health of the district board.

57. No person shall wash or cause to be washed in any tank or water course or any other receptacle for water used by the public for drinking or bathing purposes any clothes, bedding or other articles which have been used by a person suffering from any infectious or contagious disease.

58. No person shall bathe, or shall wash clothes, utensils or any other article within a distance of twenty feet from any public well.

59. No person shall ease himself at the side of or into any river, stream, channel, tank or well which is used by the public or any district board road.

The penalty for infringement of any of the by-laws 16 to 59 shall be a fine not exceeding the sum of Rs. 10 for the first offence and in the case of a second or subsequent conviction for a similar offence to a fine not exceeding Rs. 50 and in case of a continuing offence to a fine not exceeding Rs. 5 for each day during which such offence is continued after conviction therefor.

J. G. DRUMMOND, *Commissioner (offg.)*.

Rangpur, the 20th August 1931.

No. 4745J.—It is hereby notified for general information that, under section 13 of the Bengal Village Self-Government Act, 1919 (Bengal Act V of 1919), Munshi Bahar Uddin Sarkar has been appointed to be a member of Khoragachi union board in police-station Mithapukur in the Sadar subdivision of the district of Rangpur, *vice* Munshi Sabir Uddin Sirkar, deceased.

No. 4747J.—It is hereby notified for general information that, under section 13 of the Bengal Village Self-Government Act, 1919 (Bengal Act V of 1919), Munshi Tofazzal Hossain Shah has been duly elected to be a member of Balua Masimpur union board in police-station Mithapukur in the Sadar subdivision of the district of Rangpur, *vice* Munshi Mofiz Uddin Sarkar, resigned.

No. 4749J.—It is hereby notified for general information that, under section 13 of the Bengal Village Self-Government Act, 1919 (Bengal Act V of 1919), Munshi Rahim Uddin Kabiraj and Babu Rupendra Chandra Deb Nath have been duly elected to be members of Bhangni union board in police-station Mithapukur in the Sadar subdivision of the district of Rangpur, *vice* Babu Nalini Kanta Banerjee and Munshi Motaher Ali, deceased.

No. 4751J.—It is hereby notified for general information that, under section 13 of the Bengal Village Self-Government Act, 1919 (Bengal Act V of 1919), Munshi Haji Khejmatulla Mondal has been duly elected to be a member of Mirzapur union board in police-station Mithapukur in the Sadar subdivision of the district of Rangpur, *vice* Babu Ananda Mohan Mohanta, deceased.

T. M. Dow, *District Magistrate.*

Jalpaiguri, the 21st August 1931.

It is hereby notified for general information that, under section 13 of the Bengal Village Self-Government Act, 1919 (Act V of 1919), Babu Bhupendra Nath Ray Sarker has been duly appointed to be a member of the Kharija Berubari union board, police-station Jalpaiguri, in the Sadar subdivision of the district of Jalpaiguri, in place of Babu Kali Nath Sarker, deceased.

R. L. WALKER, *Deputy Commissioner.*

The Calcutta Gazette

THURSDAY, AUGUST 27, 1931

Part I A

Orders and Notifications by the Government of India republished for general information.

DEPARTMENT OF COMMERCE.

NOTIFICATIONS.

TARIFFS.

Simla, the 1st August 1931.

No. 599-T. (12).—In pursuance of sub-section (*3*) of section 1 of the Indian Lac Cess Act, 1930 (XXIV of 1930), the Governor-General in Council is pleased to appoint the 1st August 1931 as the date on which the said Act shall come into force.

J. C. B. DRAKE,
Secy. to the Govt. of India (offg.).

MERCHANT SHIPPING.

Simla, the 8th August 1931.

No. 5-M. I. (2)/31.—Lieutenant-Commander R. A. H. McConnell, Royal Indian Marine, is appointed as officiating Nautical Surveyor, Mercantile Marine Department, Calcutta District, Calcutta, with effect from the 26th June 1931, *vice* Commander C. H. Corser, Royal Indian Marine, granted leave.

No. 5-M. I. (38)/30.—The notification of the Government of Bengal in the Marine Department, No. 85-Mne., dated the 25th April 1890, is hereby cancelled.

No. 5-M. II./31.—In pursuance of sub-section (*3*) of section 6 of the Indian Merchant Shipping Act, 1923 (XXI of 1923), and in supersession of all previous orders on the subject, the Governor-General in Council is pleased to appoint the officers specified in the second column of the annexed Schedule to be the intermediate authority referred to in the said sub-section in respect of the Shipping Masters or Deputy Shipping Masters at the ports specified respectively in the corresponding entry in the first column of the said Schedule:—

Schedule.

Ports.	Officers.
* * * * * * * *	
Calcutta, Puri, Chandbali and Balasore.	The Principal Officer, Mercantile Marine Department, Calcutta District, Calcutta.
* * * * * * * *	

No. 80-M. II/31.—In exercise of the powers conferred by clause (*c*) of sub-section (*1*) of section 37-J. of the Indian Merchant Shipping Act, 1923 (XXI of 1923), the Governor-General in Council is pleased to make the following rule prescribing the authorities whose certificates of physical fitness shall be accepted for the purposes of section 37-D of the said Act, namely:—

The certificate of physical fitness referred to in section 37-D of the Indian Merchant Shipping Act, 1923 (XXI of 1923), shall be granted by the Port Health Officer or by a doctor approved by the Port Health Officer at any port in the Presidency of Madras, Bombay or Bengal or in the province of Burma.

No. 80-M. II./31.—In exercise of the powers conferred by clause (*d*) of sub-section (*1*) of section 37-J of the Indian Merchant Shipping Act, 1923 (XXI of 1923), the Governor-General in Council is pleased to make the following rule prescribing the form of register of young persons to be maintained under section 37-E of the said Act in ships where there is no agreement with the crew, namely:—

The register of young persons to be kept by the Master in the case of every ship registered in British India and every foreign ship, where there is no agreement with the crew, shall be maintained in the following form, namely:—

Eng. 13 (India.)

Form of register prescribed under section 37-J (1) (d) of the Indian Merchant Shipping Act, 1923.

Issued by the Government of India.

List of young persons under eighteen years of age employed as members of the crew of.....
.....on a voyage from.....to.....

Name in full.	Date of birth.	Nationality stating birth place.	Capacity.	Date of joining.	Date of discharge.

Signed by.....Master, on the.....
day of.. .....19.....

NOTE.—Under the Indian Merchant Shipping Act, 1923, every master of a ship registered in British India and every master of a foreign ship is required (under a penalty of Rs. 200 for failure) to keep in the Agreement a list of young persons over fourteen and under eighteen years of age, who are members of the crew, with particulars of the dates of their birth, and the dates on which they become or cease to become members of the crew. Where space is not provided in the Agreement, or where no Agreement or Official Log is kept, these particulars must be entered in the above Form which is obtainable from the Shipping Master at any Mercantile Marine Office in India.

A. RAISMAN,
Joint Secy. to the Govt. of India (offg.).

DEPARTMENT OF INDUSTRIES AND LABOUR.

NOTIFICATIONS.

Simla, the 12th August 1931.

No. L.-1604.—In exercise of the powers conferred by sub-section (*2*) of section 3 of the Indian Boilers Act, 1923 (V of 1923), the Governor-General in Council is pleased to direct that the following amendment shall be made in the notification of the Government of India in the Department of Industries and Labour, No. A.-470, dated the 15th January 1924, namely:—

In the Schedule to the said notification the entry "The Jessore Jhenidah Railway" shall be omitted.

No. L.-1614.—In pursuance of sub-clause (*i*) of clause (*c*) of regulation 2 of the Indian Boiler Regulations, 1924, and in supersession of the notification of the Government of India in the Department of Industries and Labour, No. G. (B)-11, dated the 25th March 1924, the Governor-General in Council is pleased to appoint the undermentioned officers to be Inspecting Officers in respect of material manufactured or boilers constructed in British India, namely:—

Mr. A. J. Smith, Chief Inspector of Boilers, Bengal.

Mr. W. W. B. Rowbottom, Deputy Chief Inspector of Boilers, Bengal.

Mr. S. S. Nickels, Inspector of Boilers, Bengal.

Mr. E. Blackford, Inspector of Boilers, Bengal.

Mr. R. S. Lawrenson, Inspector of Boilers, Bengal.

Mr. D. V. Hannah, Inspector of Boilers, Bengal.

Mr. R. Grant, Inspector of Boilers, Bengal.

Mr. J. Hamilton, Inspector of Boilers, Bengal.

Mr. R. W. Garreau, Inspector of Boilers, Bengal.

Mr. J. Stocks, Inspector of Boilers, Bengal.

Mr. C. N. Holbrook, Inspector of Boilers, Bengal.

Mr. W. Garner, Inspector of Boilers, Bengal.

Mr. G. A. Edwards, Inspector of Boilers, Bengal.

Mr. S. Ollar, Inspector of Boilers, Bengal.

J. A. SHILLIDY,
Secy. to the Govt. of India.

FOREIGN AND POLITICAL DEPARTMENT.

NOTIFICATIONS.

Simla, the 13th August 1931.

No. 505-I.—In exercise of the powers conferred by section 22 of the Indian Extradition Act, 1903 (XV of 1903), the Governor-General in Council is pleased to make the following rules to provide for the pursuit and arrest in British India of persons accused of offences committed elsewhere:—

1. When a person accused of having committed in a State specified in the first schedule hereto, an offence which, if committed in British India, would be punishable under a section of the Indian Penal Code specified in the second schedule hereto, enters British India with members of the police force of that State in pursuit, the pursuing party may, subject to the provisions hereinafter contained, continue the pursuit into, and arrest the fugitive in, British India.

2. The authorisation conferred by rule (1) shall not be operative unless—

(*a*) the pursuing party includes at least one officer holding in the State police force a rank not lower than the rank corresponding with that of a head constable of police in British India, and

(*b*) the circumstances are such that an application for the continuance of the pursuit and the effecting of the arrest by the British Indian police would prejudice the prospects of effecting the arrest of the fugitive.

3. If, when the pursuing party has continued the pursuit into British India under the authority of clause (*b*) of rule 2, it becomes possible to communicate with the British Indian Police before the fugitive has been arrested and without prejudice to the prospects of effecting his arrest, the pursuing party shall forthwith communicate with the British Indian Police.

4. A person arrested by State Police under the authority of these rules shall forthwith be conveyed to the nearest place in which an officer of the British Indian Police is known to be and shall be handed over to the British Indian Police in that place.

FIRST SCHEDULE.

PART A.—*States permanently included in the Schedule.*

1. Hyderabad.
2. Mysore.
3. Kashmir.
4. Sikkim.

Central India.

5. Indore.
6. Bhopal.
7. Nagod.
8. Maihar.
9. Orchha.
10. Datia.
11. Samthar.
12. Panna.
13. Charkhari.
14. Ajaigarh.
15. Bijawar.
16. Baoni.
17. Chhatarpur.
18. Dewas Senior Branch.
19. Dewas Junior Branch.
20. Jaora.
21. Sitamau.
22. Sailana.
23. Rutlam.

Rajputana.

24. Alwar.
25. Bikaner.
26. Bharatpur.
27. Dholpur.
28. Kotah.
29. Jaipur.
30. Jodhpur.
31. Tonk.

Punjab.

32. Patiala.
33. Jind.
34. Nabha.
35. Kapurthala.
36. Malerkotla.
37. Faridkot.

States of Western India.

38. Junagadh.
39. Nawanagar.
40. Bhavanagar.
41. Porbandar.
42. Dhrangadhra.
43. Palanpur.
44. Radhanpur.
45. Morvi.
46. Gondal.
47. Jafrabad.
48. Dhrol.
49. Limbdi.
50. Wadhwan.
51. Lakhtar.
52. Vala.
53. Jasdan.
54. Manavadar.
55. Thana Devli.
56. Vadia.
57. Lathi.
58. Muli.
59. Virpur.
60. Malia.
61. Kotda-Sangani.
62. D. S. Vala Mulu Suraj of Jetpur.
63. D. S. Vala Rawat Ram of Bilkha.
64. Patdi.
65. Tharad.
66. Wao.
67. M. S. Jorawarkhanji's State Varahi.
68. Thana areas and the Civil Stations of Wadhwan and Rajkot in the Western India States Agency.

Madras States.

69. Travancore.
70. Cochin.
71. Pudukottah.

Bombay States.

72. Savantvadi.
73. Jath.
74. Savanur.
75. Cambay.
76. Janjira.
77. Kolhapur.
78. Mudhol.

79. Sangli.
80. Miraj (Senior).
81. Miraj (Junior).
82. Jamkhandi.
83. Kurundwad (Senior).
84. Kurundwad (Junior).
85. Ramdrug.
86. Idar.
87. Vijayanagar.
88. Danta.
89. Mansa.
90. Malpur.
91. Surgana.
92. Bhor.
93. Rajpipla.
94. Chhota Udepur.
95. Lunawada.
96. Sant.
97. Kadana.
98. Bhadarwa.
99. Sanjeli.
100. Jambughoda.
101. Aundh.
102. Phaltan.
103. Akalkot.
104. Khairpur.
105. Bansda.
106. Dharampur.
107. Jawhar.
108. Administered areas comprised in the Thana Circles and Sadra Bazaar.
109. Sankeda Mewas.
110. Pandu Mewas.

Bengal.

111. Cooch Behar.
112. Tripura.

United Provinces States.

113. Benares.
114. Tehri.

Assam.

115. Manipur.
116. Gwalior.
117. Rewa.
118. Sirmoor.
119. Cutch.

PART B.—*States included in the Schedule for the period, commencing from the August 1931, specified against each.*

State.			*Period.*
Dhar	...	...	5 years.
Baroda	...	...	3 years.
Ali Rajpur	...	...	2 years.
Barwani	...	...	1 year.

SECOND SCHEDULE.

List of sections of the Indian Penal Code:—

Sections 300, 302, 303, 304, 307, 308, 311, 382, 392, 393, 394, 395, 397, 398, 399, 400, 401 and 402.

C. C. WATSON,
Political Secy. to the Govt. of India.

The 13th August 1931.

No. 504-G. — The Governor-General in Council is pleased to recognise the appointment of Mr. Chang-pei Liang as Vice-Consul in charge of the Consulate General for China at Calcutta.

E. B. HOWELL,
Foreign Secy. to the Govt. of India.

HOME DEPARTMENT.

NOTIFICATION.

JUDICIAL.

Simla, the 11th August 1931.

No. F. 705/31.—The Honourable Mr. Justice J. F. Graham, I.C.S., a Judge of the High Court of Judicature at Fort William in Bengal, is granted leave on half allowance from the 22nd November to the 22nd December 1931 (both days inclusive).

S. N. ROY,
Joint Secy. to the Govt. of India (offg.).

FINANCE DEPARTMENT (CENTRAL REVENUES).

NOTIFICATION.

CUSTOMS.

Simla, the 8th August 1931.

No. 45.—In exercise of the powers conferred by Section 19 of the Sea Customs Act, 1878 (VIII of 1878), the Governor-General in Council is pleased to prohibit the bringing into British India of any copy of a leaflet entitled "Message to the Martyrs: A Call to Arms" containing pictures of Rajguru, Bhagat Singh and Sukdev, published by Hindustan Gadar Party, 5, Wood Street, San Francisco, California.

G. S. HARDY,
Joint Secy. to the Govt. of India.

ARMY DEPARTMENT.

Simla, the 15th August 1931.

Part B.

JUDICIAL.

No. 502.—The following draft of a further amendment to the Indian Territorial Force Rules, 1921, which it is proposed to make in exercise of the powers conferred by section 13 of the Indian Territorial Force Act, 1920, is published as required by sub-section (*1*) of the said section for the information of all persons likely to be affected thereby, and notice is hereby given that the said draft will be taken into consideration on or after the 15th September 1931.

Any objection or suggestion which may be received from any person with respect to the draft before the said date will be considered by the Governor General in Council.

Draft Amendment.

In rule 20 of the said Rules after the word, figures and letter "section 11-A" the words, brackets, letter and figures "of the Act or under clause (*c*) of rule 24" shall be inserted.

G. M. YOUNG,
Secy. to the Govt. of India.

The Calcutta Gazette

THURSDAY, AUGUST 27, 1931.

Part I B

Educational Notices.

Board of Intermediate and Secondary Education, Dacca.

NOTIFICATIONS.

Dacca, the 7th August 1931.

Special Stipends, 1931.

No. 3947.—The following students are awarded the above stipends on the results of the High Madrasa Examination, 1931, conducted by the Board of Intermediate and Secondary Education, Dacca. The stipends take effect from the 1st June 1931, and are tenable for two years only at Islamic Colleges under the Board.

(Principals of Islamic Intermediate Colleges are requested to report to the Secretary to the Board of Intermediate and Secondary Education, Dacca, the names of holders of stipends admitted to their institutions. No stipend can be drawn until this information is available):—

Nine Stipends of Rs. 8 a month each.

Serajganj Islamic Intermediate College.

Muhammad Anisur Rahman.

Ahmadia Madrasa.

Muhammad Azizur Rahman.
Ali Ahmad.
Muhammad Islam.

Dacca Islamic Intermediate College.

Ghulam Rabbani.

Dadanchak Madrasa.

Muhammad Idris.

Chandpur Nuria Madrasa.

Wajihullah Bhuiyan.

Hooghly Madrasa.

Muhammad Abdul Aziz.

Keundia Madrasa.

Abul Kalam Muhammad Nazimuddin.

No. 3959.—In partial modification of this office notification No. 5031, dated the 11th August 1930, as published in the *Calcutta Gazette*, dated the 28th August 1930, the Mohsin Stipend of Rs. 5 a month awarded to Muhammad Bellal Huq on the results of the High School Examination, 1930, for two years with effect from the 1st June 1930, is reawarded to Ashrafuddin Ahmad, who passed the said examination from the Collegiate School, Dacca, for the period from the 1st April 1931 to the 31st May 1932. The stipend is tenable at the Dacca Intermediate College.

A. RAHMAN, *Secretary.*

Education Department, Bengal.

NOTIFICATION.

Calcutta, the 15th August 1931.

The undermentioned candidate is awarded a Post-Graduate scholarship of the value of Rs. 100 a month, vacated by Mr. Pulin Behari Sarkar, for one year in the first instance, with effect from 1st July 1931:—

Bhagawaty Charan Guha.

Subject of research.

Physics, with special reference to the subject of Magnetism.

Place of work.

Dacca University.

J. M. BOTTOMLEY,

Director of Public Instrn., Bengal (offg.).

Calcutta University.

NOTICE.

Senate House, the 17th August 1931.

Calcutta University—A special Convocation will be held on Wednesday, the 2nd September 1931, at 5 p.m., to confer degrees on graduates of the year intending to prosecute their studies abroad. Such graduates should immediately address the Principal of the College from which they graduated for attending the Convocation. Non-collegiate students are requested to communicate with the Registrar forthwith.

A. N. MUKHERJEE, *Registrar.*

Orders by the Vice-Chancellor and Syndicate of the Calcutta University.

Senate House, the 28th August 1931.

The undermentioned candidate is declared to have passed the D. P. H. Examination, Part II, held in August 1931:—

M. Chit Tway—Calcutta School of Tropical Medicine and Hygiene.

B. B. DUTT,

for *Controller of Examinations.*

The Calcutta Gazette

THURSDAY, AUGUST 27, 1931.

Part II

Advertisements.

Notices.

Advertisements, Notices, etc., intended for insertion in this Part of the Gazette cannot be received after noon of Saturday.

IMPERIAL BANK OF INDIA.

Statement of the affairs of the Imperial Bank of India on the 14th August 1931.

LIABILITIES.

	Rs.	A.	P.
Subscribed Capital ..	11,25,00,000	0	0
Capital paid up ..	5,62,50,000	0	0
Reserve ..	5,42,50,000	0	0
Public Deposits ..	17,77,56,000	0	0
Other Deposits ..	65,01,67,000	0	0
Loans against securities per contra ..	....		
Loans from the Government of India under section 20 of the Paper Currency Act, against Inland bills discounted and purchased per contra ..	....		
Contingent liabilities ..	....		
Sundries ..	1,14,75,000	0	0
	94,98,98,000	0	0

ASSETS.

	Rs.	A.	P.
Government Securities ..	29,61,36,000	0	0
Other authorized securities under the Act ..	2,76,78,000	0	0
Ways and Means Advances to the Government of India ..	....		
Loans ..	9,07,80,000	0	0
Cash Credits ..	26,76,79,000	0	0
Inland bills discounted and purchased ..	2,28,53,000	0	0
Foreign bills discounted and purchased ..	33,99,000	0	0
Bullion ..	....		
Dead stock ..	2,72,65,000	0	0
Liability of constituents for contingent liabilities per contra ..	....		
Sundries ..	49,83,000	0	0
Balances with other Banks ..	19,96,000	0	0
	74,27,78,000	0	0
Cash ..	20,71,20,000	0	0
	94,98,98,000	0	0

The above balance sheet includes :—

	£
Deposits in London ..	978,300
Advances and Investments in London ..	928,300
Cash and balances at other Banks in London ..	150,900

Percentage 24·07.

Bank rate 7 per cent.

K. M. MacDonald,
Managing Governor.

(2756—1)

LAND SALE NOTICES.

Notification A.

NOTICE is hereby given, under sections 6 and 13, Act XI of 1859, that the undermentioned estates and shares of estates in the district of Nadia will be put up for sale at the office of the Collector of that district on the 25th September 1931, at 12 noon, for arrears of revenue and other demands which by law are realizable as arrears of land revenue.

When in columns 5, 7 and 9 of the following statement it is stated that only a share is to be sold, it is to be understood that a separate account is kept for that share :—

Tauzi No.	Name of mahal and pargana.	Sadar jama of whole estate.	Whether the whole estate is to be sold.	If only a share is to be sold, specification of such share or shares.	Names of proprietors of property to be sold.	If only a share is to be sold, the sadar jama of such share.	If the whole estate is to be sold, the arrears due from it.	If only a share is to be sold, the arrears due from it.
1	2	3	4	5	6	7	8	9
		Rs. A. P.				Rs. A. P.	Rs. A. P.	Rs. A. P.
39	Bagwan, pargana Shahauzial.	2,302 14 11	Whole ..	....	Gopesh Chandra Majumdar and others.	..	213 12 8	..
371/5	Nakasipara, pargana Bagwan.	..	No ..	8 annas 11 gandas 2 kr. 8 tils. All other shares than that specified will be excluded from sale.	Sibendra Nath Sinha Roy and others.	3,233 10 0	..	261 10 3
442/2	Bamanpara, pargana Ukhra.	..	No ..	5 annas .. All other shares than that specified will be excluded from sale.	Shyama Nanda Banerjee, Manager, Satkhira Court of Wards, and others.	1,672 2 9	..	173 11 8
2861	Brittibuda, pargana Bagwan.	564 14 10	Whole ..	....	Chandi Prasad Ganguly and others.	..	106 0 0	..
2949	Bil Basu Lakshmi, pargana Bagwan.	558 8 4	Do. ..	....	Saroj Ranjan Pal Chowdhuri and others.	..	49 2 7	..
3237/0	Teghari, pargana Muhammadshahi.	..	No ..	10 annas 5 gandas .. All other shares than that specified will be excluded from sale.	Harish Chandra Sinha and others.	635 10 4	..	19 4 1
3431/0	Nazir Enaitpur, pargana Nazir Enaitpur.	..	No ..	8 annas .. All other shares than that specified will be excluded from sale.	Shyama Nanda Banerjee, Manager, Satkhira Court of Wards, and others.	809 14 9	..	144 4 5
834	Miadi Mahal Char Durlavpur, pargana Gosah.	597 0 0	Whole ..	....	Girindra Nath Roy and others.	..	149 0 0	..
854	Char Jhutladanga, pargana Shahauzial.	1,370 0 0	Do. ..	....	Gopal Chandra Majumdar and others.	..	342 0 0	..
870	Char Udaichandrapur, pargana Bagwan.	5,147 0 0	Do. ..	....	Shibendra Nath Sinha Roy and others.	..	724 10 9	..
871	Char Naodapara, pargana Shahauzial.	1,424 0 0	Do. ..	....	Sib Sundari Dasya	..	356 0 0	..
892	Char Srirampur, pargana Bhandardaha.	590 0 0	Do. ..	....	Bibhuti Bhusan Pal Chowdhuri and others.	..	147 0 0	..
3531	Char Goalgram, pargana Rajpur.	719 0 0	Do. ..	....	Nalini Mohan Roy.	..	180 0 0	..
3819	Char Pirpur, pargana Islampur.	662 0 0	Do. ..	....	Gopi Sundari Dasya and others.	..	248 10 0	..

Krishnagar, the 13th August 1931.

[ILLEGIBLE], *for* Collector.

Notification A.

NOTICE is hereby given, under sections 6 and 13 of Act XI of 1859, that the undermentioned estates in the district of 24-Parganas will be put up for sale at the office of the Collector of that district on the 10th September 1931, at 12 noon, for arrears of revenue and other demands which by law are realizable as arrears of land revenue :—

Tauzi No.	Name of mahal and pargana.	Sadar jama of whole estate.	Whether the whole estate is to be sold.	If only a share is to be sold, specification of such share or shares.	Names of proprietors of property to be sold.	If only a share is to be sold, the sadar jama of such share.	If the whole estate is to be sold, the arrears due from it.	If only a share is to be sold, the arrears due from it.
1	2	3	4	5	6	7	8	9
		Rs. A. P.					Rs. A. P.	
314	Mahal Harinarayanpore, pargana Muragacha.	12,168 14 0	Whole ..	....	Kumud Krista Mandal and others.	....	1,448 2 9½	....
315	Mahal Raghunathpore, pargana Muragacha.	10,159 1 9	Do. ..	....	Ditto ..	....	5,709 9 5½	....
378	Mahal Kalikapore, pargana Baridhati.	2,133 6 11	Do. ..	....	Khiroda Kumari Dasi and others.	....	309 7 11	....
385	Mahal Huda Rashkhali, pargana Azimabad.	19,395 7 0	Do. ..	....	Suresh Chandra Chatterji and others.	....	12,616 5 11	....
388	Mahal Mayapore, pargana Balia.	8,326 9 0	Do. ..	....	Rama Prosad Pande and others.	....	3,120 11 0	....
401	Mahal Ramkristapore, pargana Azimabad.	8,931 0 0	Do. ..	....	Jotindranath Mondal and others.	....	3,382 13 9	....
403	Mahal Patharberia, pargana Azimabad.	5,143 3 3	Do. ..	....	Ashutosh Santra and others.	....	1,710 3 1	....
643	Mahal Palkan, pargana Amirabad.	560 8 0	Do. ..	....	Jotindranath Ray Chaudhury and others.	....	204 3 6	....
2855	Mahal plot D, 1st portion, pargana Sundarbans.	1,069 0 0	Do. ..	....	Ichamayi Dasi and others.	....	68 6 4	....
2887	Mahal plot D, 3rd portion, pargana Sundarbans.	1,105 0 0	Do. ..	....	Madhab Chandra Dey and others.	....	30 4 8	....
2916	Mahal F plot, 2nd portion, pargana Sundarbans.	1,172 0 0	Do. ..	....	Kedarnath Chakraverty and others.	....	86 5 3	....
2990	Mahal lot No. 119, 1st portion, pargana Sundarbans.	839 0 0	Do. ..	....	Provat Kumar Pal and others.	....	877 8 5	....

Alipore, the 15th August 1931.

P. GHOSE, *for* Collector.

Notification A.

NOTICE is hereby given, under sections 6 and 13, Act XI of 1859, that the undermentioned estates and shares of estates in the district of Howrah will be put up for sale at the office of the Collector of that district on 26th September 1931, at 12 noon, for arrears of revenue and other demands which by law are realizable as arrears of land revenue.

When in columns 5, 7 and 9 of the following statement it is stated that only a share is to be sold, it is to be understood that a separate account is kept for that share :—

Tauzi No.	Name of mahal and pargana.	Sadar jama of whole estate.	Whether the whole estate is to be sold.	If only a share is to be sold, specification of such share or shares.	Names of proprietors of property to be sold.	If only a share is to be sold, the sadar jama of such share.	If the whole estate is to be sold, the arrears due from it.	If only a share is to be sold, the arrears due from it.
1	2	3	4	5	6	7	8	9
		Rs. A. P.				Rs. A. P.		Rs. A. P.
4	Mondalghat, pargana Mondalghat.	2,23,108 13 11	..	12 gandas ..	Shamananda Banerjee as Manager of the Wards Estate of Dwijendra Nath Ray Choudhury and others. Released on 15th March 1929.	4,820 4 3	..	3,167 3 5
4/8	Ditto ..	2,23,108 13 11	..	12 gandas 3 kara 16 til	Sm. Nikunja Munjari Dasi.	8,929 10 4	..	450 0 0
4/12	Ditto ..	2,23,108 13 11	..	10 gandas ..	Sailaja Nath Ray Choudhury and others.	6,972 18 2	..	904 11 10

All other shares besides those specified above will be excluded from the sale.

Howrah, the 7th August 1931.

A. M. CLARK, Col

Notification A.

NOTICE is hereby given, under sections 6 and 13, Act XI of 1859, that the undermentioned estate and shares of estate in the district of Burdwan will be put up for sale at the office of the Collector of that district on the 25th September 1931, at 12 noon, for arrears of revenue and other demands for Jaistha kist, 1338 B.S., which by law are realizable as arrears of land revenue.

When in columns 5, 7 and 9 of the following statement it is stated that only a share is to be sold, it is to be understood that a separate account is kept for that share :—

Tauzi No.	Name of mahal and pargana.	Sadar jama of whole estate.	Whether the whole estate is to be sold.	If only a share is to be sold, specification of such share or shares.	Names of proprietors of property to be sold	If only a share is to be sold, the sadar jama of such share.	If the whole estate is to be sold, the arrears due from it.	If only a share is to be sold, the arrears due from it.
1	2	3	4	5	6	7	8	9
		Rs. A. P.				Rs. A. P.		Rs. A. P.
21	Mahata, etc., pargana Bagha	11,677 0 0	..	S. A No. 2—1a. 5gds. 3k. 2kr. 1½d. share is to be sold. All other shares than that specified will be excluded from the sale.	Surja Kumari Dasi, trustee to the estate of late Bakkeswar Ta and others.	947 11 9	..	82 3 2

Burdwan, the 17th August 1931. H. C. BOSE, Collector (offg.).

Notification A.

NOTICE is hereby given, under sections 6 and 13, Act XI of 1859, that the undermentioned estate and shares of estate in the district of Burdwan will be put up for sale at the office of the Collector of that district on the 25th September 1931, at 12 noon, for arrears of revenue and other demands for Jaistha kist, 1338 B.S., which by law are realizable as arrears of land revenue.

When in columns 5, 7 and 9 of the following statement it is stated that only a share is to be sold, it is to be understood that a separate account is kept for that share :—

Tauzi No.	Name of mahal and pargana	Sadar jama of whole estate.	Whether the whole estate is to be sold.	If only a share is to be sold, specification of such share or shares.	Names of proprietors of property to be sold.	If only a share is to be sold, the sadar jama of such share	If the whole estate is to be sold, the arrears due from it.	If only a share is to be sold the arrears due from it.
1	2	3	4	5	6	7	8	9
		Rs. A. P.				Rs. A. P.		Rs. A. P.
62	Palsona, pargana Dheyan.	7,400 11 11	..	Residuary -8as. 6gd. 0k. 2kr. ½d. share is to be sold. All other shares than that specified will be excluded from the sale.	Paramanik Chandra and others.	3,843 5 11	..	335 9 7

Burdwan, the 17th August 1931. H. C. BOSE, Collector (offg.).

Notification A.

NOTICE is hereby given, under sections 6 and 13, Act XI of 1859, that the undermentioned estate and shares of estate in the district of Burdwan will be put up for sale at the office of the Collector of that district on the 25th September 1931, at 12 noon, for arrears of revenue and other demands for Jaistha kist, 1338 B.S., which by law are realizable as arrears of land revenue.

When in columns 5, 7 and 9 of the following statement it is stated that only a share is to be sold, it is to be understood that a separate account is kept for that share :—

Tauzi No.	Name of mahal and pargana.	Sadar jama of whole estate.	Whether the whole estate is to be sold.	If only a share is to be sold, specification of such share or shares.	Names of proprietors of property to be sold.	If only a share is to be sold, the sadar jama of such share.	If the whole estate is to be sold, the arrears due from it.	If only a share is to be sold, the arrears due from it.
1	2	3	4	5	6	7	8	9
		Rs. A. P.				Rs. A. P.		Rs. A. P.
62	Palsona, pargana Dheyan.	7,400 11 11	....	Separate account No. 5—1 a. 5 gds. 2½dt. share is to be sold. All other shares than that specified will be excluded from the sale.	Biman Kumari Dasi as guardian mother of minor sons Pramatha Nath Chandra and others, and others.	579 12 9	....	23 7 1

Burdwan, the 17th August 1931. H. C. BOSE, Collector (offg.).

Notification A.

NOTICE is hereby given, under sections 6 and 13, Act XI of 1859, that the undermentioned estate and shares of estate in the district of Burdwan will be put up for sale at the office of the Collector of that district on the 25th September 1931, at 12 noon, for arrears of revenue and other demands for Jaistha kist, 1338 B. S., which by law are realizable as arrears of land revenue.

When in columns 5, 7 and 9 of the following statement it is stated that only a share is to be sold, it is to be understood that a separate account is kept for that share :—

Tauzi No.	Name of mahal and pargana.	Sadar jama of whole estate.	Whether the whole estate is to be sold.	If only a share is to be sold, specification of such share or shares.	Names of proprietors of property to be sold.	If only a share is to be sold, the sadar jama of such share.	If the whole estate is to be sold, the arrears due from it.	If only a share is to be sold, the arrears due from it.
1	2	3.	4	5	6	7	8	9
		Rs. A. P.				Rs. A. P.		Rs. A. P.
62	Palsona, pargana Dheyan.	7,400 11 11	....	Separate account No. 1—2 annas share is to be sold. All other shares than that specified will be excluded from the sale.	Paramsuk Chandra and others.	925 1 6	....	120 11 1

Burdwan, the 17th August 1931. H. C. BOSE, Collector (offg.).

Notification A.

NOTICE is hereby given, under sections 6 and 13, Act XI of 1859, that the undermentioned estate and shares of estate in the district of Burdwan will be put up for sale at the office of the Collector of that district on the 25th September 1931, at 12 noon, for arrears of revenue and other demands for Jaistha kist, 1338 B. S., which by law are realizable as arrears of land revenue.

When in columns 5, 7 and 9 of the following statement it is stated that only a share is to be sold, it is to be understood that a separate account is kept for that share :—

Tauzi No.	Name of mahal and pargana.	Sadar jama of whole estate.	Whether the whole estate is to be sold.	If only a share is to be sold, specification of such share or shares.	Names of proprietors of property to be sold.	If only a share is to be sold, the sadar jama of such share.	If the whole estate is to be sold, the arrears due from it.	If only a share is to be sold, the arrears due from it.
1	2	3	4	5	6	7	8	9
		Rs. A. P.				Rs. A. P.		Rs. A. P.
65	Majida, pargana Patuli.	9,381 6 9	..	Residuary — 1 s. 15 gds 2 k. 2 dt. share is to be sold. All other shares than that specified will be excluded from the sale.	Ramranjan Mollik and others.	1,025 15 6	....	48 8 10

Burdwan, the 17th August 1931. H. C. BOSE, Collector (offg.).

Notification A.

NOTICE is hereby given, under sections 6 and 13, Act XI of 1859, that the undermentioned estate and shares of estate in the district of Burdwan will be put up for sale at the office of the Collector of that district on the 25th September 1931, at 12 noon, for arrears of revenue and other demands for Jaistha kist, 1338 B.S., which by law are realizable as arrears of land revenue.

When in columns 5, 7 and 9 of the following statement it is stated that only a share is to be sold, it is to be understood that a separate account is kept for that share :—

Tauzi No.	Name of mahal and pargana.	Sadar jama of whole estate.	Whether the whole estate is to be sold.	If only a share is to be sold, specification of such share or shares.	Names of proprietors of property to be sold.	If only a share is to be sold, the sadar jama of such share.	If the whole estate is to be sold, the arrears due from it.	If only a share is to be sold, the arrears due from it.
1	2	3	4	5	6	7	8	9
		Rs. A. P.				Rs. A. P.		Rs. A. P.
65	Majida, pargana Patuli.	9,381 6 9	..	Separate account No. 1— 2 as. 13 gds. 1 k. 1 kr. share is to be sold. All other shares than that specified will be excluded from the sale.	Ramranjan Mollik and others.	1,506 9 6	....	135 7 3

Burdwan, the 17th August 1931. H. C. BOSE, Collector (offg.).

Notification A.

NOTICE is hereby given, under sections 6 and 13, Act XI of 1859, that the undermentioned estate and shares of estate in the district of Burdwan will be put up for sale at the office of the Collector of that district on the 25th September 1931, at 12 noon, for arrears of revenue and other demands for Jaistha kist, 1338 B.S., which by law are realizable as arrears of land revenue.

When in columns 5, 7 and 9 of the following statement it is stated that only a share is to be sold, it is to be understood that a separate account is kept for that share :—

Touzi No.	Name of mahal and pargana.	Sadar jama of whole estate.	Whether the whole estate is to be sold.	If only a share is to be sold, specification of such share or shares.	Names of proprietors of property to be sold.	If only a share is to be sold, the sadar jama of such share.	If the whole estate is to be sold, the arrears due from it.	If only a share is to be sold, the arrears due from it.
1	2	3	4	5	6	7	8	9
		Rs. A. P.				Rs. A. P.		Rs. A. P.
65	Majida, pargana Patuli.	9,381 6 9	..	Separate account No. 7—1a. 15 gds. 2k. 2dt. share is to be sold. All other shares than that specified will be excluded from the sale.	Panchoo Gopal Chakravorty.	1,044 10 2	..	36 4 9

Burdwan, the 17th August 1931. H. C. BOSE, Collector (offg.).

Notification A.

NOTICE is hereby given, under sections 6 and 13, Act XI of 1859, that the undermentioned estate and shares of estate in the district of Burdwan will be be put up for sale at the office of the Collector of that district on the 25th September 1931, at 12 noon, for arrears of revenue and other demands for Jaistha kist, 1338 B.S., which by law are realizable as arrears of land revenue.

When in columns 5, 7 and 9 of the following statement it is stated that only a share is to be sold, it is to be understood that a separate account is kept for that share :—

Touzi No.	Name of mahal and pargana.	Sadar jama of whole estate.	Whether the whole estate is to be sold.	If only a share is to be sold, specification of such share or shares.	Names of proprietors of property to be sold.	If only a share is to be sold, the sadar jama of such share.	If the whole estate is to be sold, the arrears due from it.	If only a share is to be sold, the arrears due from it.
1	2	3	4	5	6	7	8	9
		Rs. A. P.				Rs. A. P.		Rs. A. P.
65	Majida, pargana Patuli.	9,381 6 9	..	Separate account No. 6—1a. 15gds. 2k. 2dt. share is to be sold. All other shares than that specified will be excluded from the sale.	Amiya Prosad Mollik and others.	1,044 6 6	.....	85 5 9

Burdwan, the 17th August 1931. H. C. BOSE, Collector (offg.).

Notification A.

NOTICE is hereby given, under sections 6 and 13, Act XI of 1859, that the undermentioned estate and shares of estate in the district of Burdwan will be put up for sale at the office of the Collector of that district on the 25th September 1931, at 12 noon, for arrears of revenue and other demands for Jaistha kist, 1338 B.S., which by law are realizable as arrears of land revenue.

When in columns 5, 7 and 9 of the following statement it is stated that only a share is to be sold, it is to be understood that a separate account is kept for that share :—

Touzi No.	Name of mahal and pargana.	Sadar jama of whole estate.	Whether the whole estate is to be sold.	If only a share is to be sold, specification of such share or shares.	Names of proprietors of property to be sold.	If only a share is to be sold, the sadar jama of such share.	If the whole estate is to be sold, the arrears due from it.	If only a share is to be sold, the arrears due from it.
1	2	3	4	5	6	7	8	9
		Rs. A. P.				Rs. A. P.		Rs. A. P.
65	Majida, pargana Patuli	9,381 6 9	..	Separate account No. 8—2 as. 13 gds. 1 k. 1 kr. share is to be sold. All other shares than that specified will be excluded from the sale.	Ramranjan Mollik, and others.	1,566 10 1	..	135 3 7

Burdwan, the 17th August 1931. H. C. BOSE, Collector (offg.).

Notification A.

NOTICE is hereby given, under sections 6 and 13, Act XI of 1859, that the undermentioned estate and shares of estate in the district of Burdwan will be put up for sale at the office of the Collector of that district on the 25th September 1931, at 12 noon, for arrears of revenue and other demands for Jaistha kist, 1338, B.S., which by law are realizable as arrears of land revenue.

When in columns 5, 7 and 9 of the following statement it is stated that only a share is to be sold, it is to be understood that a separate account is kept for that share :—

Tauzi No.	Name of mahal and pargana.	Sadar jama of whole estate.	Whether the whole estate is to be sold.	If only a share is to be sold, specification of such share or shares.	Names of proprietors of property to be sold.	If only a share is to be sold, the sadar jama of such share.	If the whole estate is to be sold, the arrears due from it.	If only a share is to be sold, the arrears due from it.
1	2	3	4	5	6	7	8	9
		Rs. A. P.				Rs. A. P.		Rs. A. P.
5170	Dahukadanga, pargana Sahabad.	6,421 15 3	..	Separate account No. 1—2 as. 13 gds. 1 k. 1 kr. share is to be sold. All other shares than that specified will be excluded from the sale.	Indumati Debi as guardian of minor Baidya Nath Ray.	1,070 5 4	..	141 14 0

Burdwan, the 17th August 1931. H. C. BOSE, Collector (offg.).

Notification A.

NOTICE is hereby given, under sections 6 and 13, Act XI of 1859, that the undermentioned estate and shares of estate in the district of Burdwan will be put up for sale at the office of the Collector of that district on the 25th September 1931, at 12 noon, for arrears of revenue and other demands for Jaistha kist, 1338 B.S., which by law are realizable as arrears of land revenue :—

Tauzi No.	Name of mahal and pargana.	Sadar jama of whole estate.	Whether the whole estate is to be sold.	If only a share is to be sold, specification of such share or shares.	Names of proprietors of property to be sold.	If only a share is to be sold, the sadar jama of such share.	If the whole estate is to be sold, the arrears due from it.	If only a share is to be sold, the arrears due from it.
1	2	3	4	5	6	7	8	9
		Rs. A. P.					Rs. A. P.	
24	Kashinathpur, pargana Dheyan.	3,192 15 0	Whole estate is to be sold.	....	Panchoo Gopal Mukherjee and others.	..	268 0 9	..

Burdwan, the 17th August 1931. H. C. BOSE, Collector (offg.).

Notification A.

NOTICE is hereby given, under sections 6 and 13, Act XI of 1859, that the undermentioned estate and shares of estate in the district of Burdwan will be put up for sale at the office of the Collector of that district on the 25th September 1931, at 12 noon, for arrears of revenue and other demands for Jaistha kist, 1338 B.S., which by law are realizable as arrears of land revenue.

When in columns 5, 7 and 9 of the following statement it is stated that only a share is to be sold, it is to be understood that a separate account is kept for that share :—

Tauzi No.	Name of mahal and pargana.	Sadar jama of whole estate.	Whether the whole estate is to be sold.	If only a share is to be sold, specification of such share or shares.	Names of proprietors of property to be sold.	If only a share is to be sold, the sadar jama of such share.	If the whole estate is to be sold, the arrears due from it.	If only a share is to be sold, the arrears due from it.
1	2	3	4	5	6	7	8	9
		Rs. A. P.				Rs. A. P.		Rs. A. P.
67	Gopalnagar, pargana Sahabad.	2,047 2 0	..	Residuary—4 as. share is to be sold. All other shares than that specified will be excluded from the sale.	Subodh Kumar Mustafi and others.	509 12 0	..	67 7 8

Burdwan, the 17th August 1931. H. C BOSE, Collector (offg.).

Notification A.

NOTICE is hereby given, under sections 6 and 13, Act XI of 1859, that the undermentioned estate and shares of estate in the district of Burdwan will be put up for sale at the office of the Collector of that district on the 25th September 1931, at 12 noon, for arrears of revenue and other demands for Jaistha kist, 1338 B.S., which by law are realizable as arrears of land revenue :—

Tauzi No.	Name of mahal and pargana.	Sadar jama of whole estate.	Whether the whole estate is to be sold.	If only a share is to be sold, specification of such share or shares.	Names of proprietors of property to be sold.	If only a share is to be sold, the sadar jama of such share.	If the whole estate is to be sold, the arrears due from it.	If only a share is to be sold, the arrears due from it.
1	2	3	4	5	6	7	8	9
		Rs. A. P.					Rs. A. P.	
59	Mohonpur, pargana Bagha.	1,653 7 11	Whole estate is to be sold.	..	Madhab Chandra Ta and others.	..	115 10 0	..

Burdwan, the 17th August 1931. H. C. BOSE, Collector (offg.).

Notification A.

NOTICE is hereby given, under sections 6 and 13, Act XI of 1859, that the undermentioned estate and shares of estate in the district of Burdwan will be put up for sale at the office of the Collector of that district on the 25th September 1931, at 12 noon, for arrears of revenue and other demands for Jaistha kist, 1338 B. S., which by law are realizable as arrears of land revenue :—

Tauzi No.	Name of mahal and pargana.	Sadar jama of whole estate.	Whether the whole estate is to be sold.	If only a share is to be sold, specification of such share or shares.	Names of proprietors of property to be sold.	If only a share is to be sold, the sadar jama of such share.	If the whole estate is to be sold, the arrears due from it.	If only a share is to be sold, the arrears due from it.
1	2	3	4	5	6	7	8	9
		Rs. A. P.					Rs. A. P.	
93	Korooi, pargana Binodeanagar.	1,399 7 6	Whole estate is to be sold.	....	Kshitish Chandra Mukherjee and others.	..	10 5 0	..

Burdwan, the 17th August 1931. H. C. BOSE, Collector (offg.).

Notification A.

NOTICE is hereby given, under sections 6 and 13, Act XI of 1859, that the undermentioned estate and shares of estate in the district of Burdwan will be put up for sale at the office of the Collector of that district on the 25th September 1931, at 12 noon, for arrears of revenue and other demands for Jaistha kist, 1338 B.S., which by law are realizable as arrears of land revenue.

When in columns 5, 7 and 9 of the following statement it is stated that only a share is to be sold, it is to be understood that a separate account is kept for that share :—

Tauzi No.	Name of mahal and pargana.	Sadar jama of whole estate.	Whether the whole estate is to be sold.	If only a share is to be sold, specification of such share or shares.	Names of proprietors of property to be sold.	If only a share is to be sold, the sadar jama of such share.	If the whole estate is to be sold, the arrears due from it.	If only a share is to be sold, the arrears due from it.
1	2	3	4	5	6	7	8	9
		Rs. A. P.				Rs. A. P.		Rs. A. P.
156	Anagram, pargana Ajmatsahi.	3,140 15 0	..	Residuary—10 as. 13 gds. 1 kara. 1 kr. share is to be sold. All other shares than that specified will be excluded from the sale.	Panchoo Gopal De Choudhury and others.	2,003 15 0	..	277 13 5

Burdwan, the 17th August 1931. H. C. BOSE, Collector (offg.).

Notification A.

NOTICE is hereby given, under sections 6 and 13, Act XI of 1859, that the undermentioned estate and shares of estate in the district of Burdwan will be put up for sale at the office of the Collector of that district on the 25th September 1931, at 12 noon, for arrears of revenue and other demands for Jaistha kist, 1338 B.S., which by law are realizable as arrears of land revenue :—

Tauzi No.	Name of mahal and pargana.	Sadar jama of whole estate.	Whether the whole estate is to be sold.	If only a share is to be sold, specification of such share or shares.	Names of proprietors of property to be sold.	If only a share is to be sold, the sadar jama of such share.	If the whole estate is to be sold, the arrears due from it.	If only a share is to be sold, the arrears due from it.
1	2	3	4	5	6	7	8	9
		Rs. A. P.					Rs. A. P.	
157	Pilkandi etc., pargana Ajmatsahi.	8,140 1 0	Whole estate is to be sold.	....	All Hafez Mondal and others.	..	414 13 11	..

Burdwan, the 17th August 1931. H. C. BOSE, Collector (offg.).

Notification A.

NOTICE is hereby given, under sections 6 and 13, Act XI of 1859, that the undermentioned estate and shares of estate in the district of Burdwan will be put up for sale at the office of the Collector of that district on the 25th September 1931, at 12 noon, for arrears of revenue and other demands for Jaistha kist, 1338 B.S., which by law are realizable as arrears of land revenue.

When in columns 5, 7 and 9 of the following statement it is stated that only a share is to be sold, it is to be understood that a separate account is kept for that share :—

Tauzi No.	Name of mahal and pargana.	Sadar jama of whole estate.	Whether the whole estate is to be sold.	If only a share is to be sold, specification of such share or shares.	Names of proprietors of property to be sold.	If only a share is to be sold, the sadar jama of such share	If the whole estate is to be sold, the arrears due from it.	If only a share is to be sold, the arrears due from it.
1	2	3	4	5	6	7	8	9
		Rs. A. P.				Rs. A. P.		Rs. A. P.
160	Belgachia, pargana Satsalka.	641 15 5	....	Residuary— 14 as. share is to be sold. All other shares than that specified will be excluded from the sale.	Radharaman Sircar and others.	561 11 5	....	21 2 8

Burdwan, the 17th August 1931. H. C. BOSE, Collector (offg.).

Notification A.

NOTICE is hereby given, under sections 6 and 13, Act XI of 1859, that the undermentioned estate and shares of estate in the district of Burdwan will be put up for sale at the office of the Collector of that district on the 25th September 1931, at 12 noon, for arrears of revenue and other demands for Jaistha kist, 1338 B.S., which by law are realizable as arrears of land revenue :—

Tauzi No.	Name of mahal and pargana.	Sadar jama of whole estate.	Whether the whole estate is to be sold.	If only a share is to be sold, specification of such share or shares.	Names of proprietors of property to be sold.	If only a share is to be sold, the sadar jama of such share.	If the whole estate is to be sold, the arrears due from it.	If only a share is to be sold, the arrears due from it.
1	2	3	4	5	6	7	8	9
		Rs. A. P.					Rs. A. P.	
181	Char Krishnadebpur, pargana Ranihati.	1,599 14 7	Whole estate is to be sold.	....	Monojbala Dasi and others.	..	200 8 6	..

Burdwan, the 17th August 1931. H. C. BOSE, Collector (offg.).

Notification A.

NOTICE is hereby given, under sections 6 and 13, Act XI of 1859, that the undermentioned estate and shares of estate in the district of Burdwan will be put up for sale at the office of the Collector of that district on the 25th September 1931, at 12 noon, for arrears of revenue and other demands for Jaistha kist, 1338 B.S., which by law are realizable as arrears of land revenue :—

Touzi No.	Name of mahal and pargana.	Sadar jama of whole estate.	Whether the whole estate is to be sold.	If only a share is to be sold, specification of such share or shares.	Names of proprietors of property to be sold.	If only a share is to be sold, the sadar jama of such share.	If the whole estate is to be sold, the arrears due from it.	If only a share is to be sold, the arrears due from it.
1	2	3	4	5	6	7	8	9
		Rs. A. P.					Rs. A. P.	
5248	Deypara, etc., pargana Burdwan.	788 1 1	Whole estate is to be sold.	....	Panchoo Gopal Mukherjee and others.	..	68 0 3	..

Burdwan, the 17th August 1931. H. C. BOSE, Collector (offg.).

Notification A.

NOTICE is hereby given, under sections 6 and 13, Act XI of 1859, that the undermentioned estate and shares of estate in the district of Burdwan will be put up for sale at the office of the Collector of that district on the 25th September 1931, at 12 noon, for arrears of revenue and other demands for Jaistha, kist 1338 B.S., which by law are realizable as arrears of land revenue :—

Touzi No.	Name of mahal and pargana.	Sadar jama of whole estate.	Whether the whole estate is to be sold.	If only a share is to be sold, specification of such share or shares.	Names of proprietors of property to be sold.	If only a share is to be sold, the sadar jama of such share.	If the whole estate is to be sold, the arrears due from it.	If only a share is to be sold, the arrears due from it.
1	2	3	4	5	6	7	8	9
		Rs. A. P.					Rs. A. P.	
5261	Deypara, etc., pargana Burdwan.	786 11 0	Whole estate is to be sold.	....	Panchoo Gopal Mukherjee and others.	..	60 5 2	..

Burdwan, the 17th August 1931. H. C. BOSE, Collector (offg.).

Notification A.

NOTICE is hereby given, under sections 6 and 13, Act XI of 1859, that the undermentioned estate and shares of estate in the district of Burdwan will be put up for sale at the office of the Collector of that district on the 25th September 1931, at 12 noon, for arrears of revenue and other demands for Jaistha kist, 1338 B. S., which by law are realizable as arrears of land revenue :—

Touzi No.	Name of mahal and pargana.	Sadar jama of whole estate.	Whether the whole estate is to be sold.	If only a share is to be sold, specification of such share or shares.	Names of proprietors of property to be sold.	If only a share is to be sold, the sadar jama of such share.	If the whole estate is to be sold, the arrears due from it.	If only a share is to be sold, the arrears due from it.
1	2	3	4	5	6	7	8	9
		Rs. A. P.					Rs. A. P.	
5268	Bangachatra, pargana Mazafarsahi.	3,137 13 0	Whole estate is to be sold.	....	Annada Prosad Saha Choudhury as sabait of Durgamata and Basontamata Thakurani.	..	305 12 8	..

Burdwan, the 17th August 1931. H. C. BOSE, Collector (offg.).

Notification A.

NOTICE is hereby given, under sections 6 and 13, Act XI of 1859, that the undermentioned estate and shares of estate in the district of Bakarganj will be put up for sale at the office of the Collector of that district on the 24th September 1931, at 12 noon, for arrears of revenue and other demands, due on or before 30th Jaistha 1338 B. S., which by law are realizable as arrears of land revenue :—

Tauzi number.	Name of mahal and pargana.	Sadar jama of whole estate.	Whether the whole estate is to be sold.	If only a share is to be sold, specification of such share or shares.	Names of proprietors of property to be sold.	If only a share is to be sold, the sadar jama of such share.	If the whole estate is to be sold, the arrears due from it.	If only a share is to be sold, the arrears due from it.
1	2	3	4	5	6	7	8	9
		Rs.					Rs. A.	
6486	Surplus alluvial accretion to Char Lakhmi *alias* Padma Manasha, tappa Krishnadebpur.	4,487	Whole ..	....	Ashapurna Banarjee and others.	....	5,719 2	....

Barisal, the 10th August 1931.

S. C. BASU, Addl. Collector.

Notification A.

NOTICE is hereby given, under sections 6 and 13, Act XI of 1859, that the undermentioned estate and shares of estate in the district of Faridpur will be be put up for sale at the office of the Collector of that district on the 25th day of September 1931, at 11 a.m., for arrears of revenue and other demands which by law are realizable as arrears of land revenue.

When in columns 5, 7 and 9 of the following statement it is stated that only a share is to be sold, it is to be understood that a separate account is kept for that share :—

Tauzi No.	Name of mahal and pargana.	Sadar jama of whole estate.	Whether the whole estate is to be sold.	If only a share is to be sold, specification of such share or shares.	Names of proprietors of property to be sold.	If only a share is to be sold, the sadar jama of such share.	If the whole estate is to be sold, the arrears due from it.	If only a share is to be sold, the arrears due from it.
1	2	3	4	5	6	7	8	9
		Rs. A. P.				Rs. A. P.		Rs. A. P.
6450	Deara taluk Mohini Mohan Das—Surplus land of Chhatibhog Kutubpur.	2,317 0 0	No ..	Residuary share consisting of 4 annas share only. All other shares than that specified above will be excluded from sale, viz :— Separate account No. 1 consisting of 12 annas share.	Brinda Rani Dasya ..	579 4 0	....	72 6 0

Faridpur, the 17th August 1931.

M. S. BAKHT, *for* Collector.

Notification A.

NOTICE is hereby given, under sections 6 and 13, Act XI of 1859, that the undermentioned estates and shares of estates in the district of Faridpur will be put up for sale at the office of the Collector of that district on the 25th day of September 1931, at 11 a.m., for arrears of revenue and other demands which by law are realizable as arrears of land revenue.

When in columns 5, 7 and 9 of the following statement it is stated that only a share is to be sold, it is to be understood that a separate account is kept for that share :—

Touzi No	Name of mahal and pargana	Sadar jama of whole estate	Whether the whole estate is to be sold.	If only a share is to be sold, specification of such share or shares.	Names of proprietors of property to be sold.	If only a share is to be sold, the sadar jama of such share.	If the whole estate is to be sold, the arrears due from it	If only a share is to be sold, the arrears due from it.
1	2	3	4	5	6	7	8	9
		Rs A. P.				Rs. A P	Rs. A. P.	Rs. A. P.
1199	Lakshmandia kismat taluk Banamali Basu, pargana Nashibashi.	911 10 6	Whole	....	Surendra Nath Guha	..	142 11 11	..
2436	Braja Nath Pal Choudhury, pargana Satair.	42,633 7 4	No ..	Residuary share consisting of 5 annas share only. All other shares than that specified above will be excluded from sale, viz.— Separate account No. 1 of 6 annas Separate account No. 3 of 2 annas. Separate account No. 5 of 2 annas. Separate account No. 6 of 1 anna	Sitala Bala Devi ..	13,322 15 3	..	3,372 2 0
2436	Ditto ..	42,633 7 4	No ..	Separate account No. 5 consisting of 2 annas share only. All other shares than that specified above will be excluded from sale, viz :— Residuary share consisting of 5 annas only. Separate account No. 1 of 6 annas share. Separate account No. 3 of 2 annas share. Separate account No. 6 of 1 anna share.	Sarat Chandra Goswami	5,329 2 11	..	1,348 11 11
3555	Taluk Ratneswar Pal and others, pargana Nasaratshahi.	2,550 13 8	Whole	....	Jyotish Chandra Mitra, Nalini Kanta Pal Choudhury, Srish Chandra Das, Sakhi Sundari Dasya and others.	..	462 9 1	..
2633	Deara taluk Girish Chandra Singha, Selamatpurchar, pargana Naldi.	775 0 0	Do. ..	....	Hon'ble Arun Chandra Singha and others as executors to the estate of late Raja Birendra Chandra Singha of Palkpara.	..	96 14 0	..
6278	Deara taluk Chandra Mohan Roy, Salia Char, pargana Nasti.	671 0 0	Do. ..	....	Khetra Mohan Bhowmik.	..	83 14 0	..
6447	Taluk—Surplus land of Nemua known as Sakhipore kismat resumed by deara, pargana Rambhawal Tappa.	586 0 0	Do. ..	....	Jogamaya *alias* Indra Bala Chowdhurani.	..	73 4 0	..
6498	Deara taluk Madan Mohan Banerjee, alluvial accretion to Mahishkhalichar, pargana Nasti	1,791 0 0	Do. ..	....	Madan Mohan Banerjee	..	55 11 0	..
6504	Deara taluk Golam Ahammad Choudhury, alluvial accretion to Char Dubail resumed by deara, pargana Jalalpur.	1,886 0 0	Do. ..	....	Gobinda Lal Mukhopadhay.	..	235 12 0	..
6604	Char Chanda I, pargana Amirabad.	756 0 0	Do ..	....	Jogamaya *alias* Indra Bala Devi Chowdhurani.	..	94 8 0	..
6771	Deara taluk Faizeali Khan, pargana Kasimpur Sehalapatti.	6,121 0 0	Do. ..	....	Abdul Latif Bhuya ..	..	6,121 0 0	..

Faridpur, the 15th August 1931.

M. S. BAKHT, *for* Collector.

Notification A.

NOTICE is hereby given, under sections 6 and 13, Act XI of 1859, that the undermentioned estate and shares of estate in the district of Rajshahi will be put up for sale at the office of the Collector of that district on the 26th September 1931, at 12 noon, for arrears of revenue and other demands which by law are realizable as arrears of land revenue.

When in columns 5, 7 and 9 of the following statement it is stated that only a share is to be sold, it is to be understood that a separate account is kept for that share :—

Tauzi No.	Name of mahal and pargana.	Sadar jama of whole estate.	Whether the whole estate is to be sold.	If only a share is to be sold, specification of such share or shares.	Names of proprietors of property to be sold.	If only a share is to be sold, the sadar jama of such share.	If the whole estate is to be sold, the arrears due from it.	If only a share is to be sold, the arrears due from it.
1	2	3	4	5	6	7	8	9
		Rs. A. P.				Rs. A. P.	Rs. A. P.	Rs. A. P.
363, S. A. No. 1.	Taraf Mahishkundi, pargana Chandalai.	7,192 14 0	No ..	4 as. 10 gds. share only. All other shares than that specified will be excluded from the sale.	Bibi Jamilatannessa and others.	2,023 0 0	....	L.R.— 151 5 0 Cess— 57 12 0 209 1 0

This estate is being advertised for sale for instalments of revenue which were due on or before the 30th Jaistha 1338 B. S. of which the latest date of payment was 29th June 1931.

Rajshahi, the 15th August 1931.

L. G. PINNELL, Collector.

Notification A.

NOTICE is hereby given, under sections 6 and 13, Act XI of 1859, that the undermentioned estate and shares of estate in the district of Rajshahi will be put up for sale at the office of the Collector of that district on the 26th September 1931, at 12 noon, for arrears of revenue and other demands which by law are realizable as arrears of land revenue.

When in columns 5, 7 and 9 of the following statement it is stated that only a share is to be sold, it is to be understood that a separate account is kept for that share :—

Tauzi No.	Name of mahal and pargana.	Sadar jama of whole estate.	Whether the whole estate is to be sold.	If only a share is to be sold, specification of such share or shares.	Names of proprietors of property to be sold.	If only a share is to be sold, the sadar jama of such share.	If the whole estate is to be sold, the arrears due from it.	If only a share is to be sold, the arrears due from it.
1	2	3	4	5	6	7	8	9
		Rs. A. P.				Rs. A. P.	Rs. A. P.	Rs. A. P.
363 Ej-mali.	Mahishkundi, pargana Chandalai.	7,192 14 0	No ..	11 as. 10 gds. share only. All other shares than that specified will be excluded from the sale.	Maulvi Chowdhuri Mahamed Mazharal Haque and others.	5,169 14 0	..	L. R.— 1,054 4 3 Cess— 293 4 0 Cost— 3 5 3 1,350 13 6

This estate is being advertised for sale for instalments of revenue which were due on or before the 30th Jaistha 1338 B. S. of which the latest date of payment was 29th June 1931.

Rajshahi, the 15th August 1931.

L. G. PINNELL, Collector.

Notification A.

NOTICE is hereby given, under sections 6 and 13, Act XI of 1859, that the undermentioned estate and shares of estate in the district of Rajshahi will be put up for sale at the office of the Collector of that district on the 26th September 1931 at 12 noon, for arrears of revenue and other demands which by law are realizable as arrears of land revenue :—

Tauzi No.	Name of mahal and pargana.	Sadar jama of whole estate.	Whether the whole estate is to be sold.	If only a share is to be sold, specification of such share or shares.	Names of proprietors of property to be sold.	If only a share is to be sold, the sadar jama of such share.	If the whole estate is to be sold, the arrears due from it.	If only a share is to be sold, the arrears due from it.
1	2	3	4	5	6	7	8	9
		Rs. A. P.					Rs. A. P.	
1845	Jiasindhu, pargana Jiasindhu.	6,411 5 0 Police— 64 4 0	Yes ..	....	Jnanendra Nath Khan and others.	..	L. R.— 48 2 7 Cess— 187 2 9 235 5 4	..

This estate is being advertised for sale for instalments of revenue which were due on or before the 30th Jaisth 1338 B.S. of which the latest date of payment was 29th June 1931.

Rajshahi, the 15th August 1931.

L. G. PINNELL, Collector.

Notification A.

NOTICE is hereby given, under sections 6 and 13, Act XI of 1859, that the undermentioned estate and shares of estate in the district of Rajshahi will be put up for sale at the office of the Collector of that district on the 26th September 1931, at 12 noon, for arrears of revenue and other demands which by law are realizable as arrears of land revenue.

When in columns 5, 7 and 9 of the following statement it is stated that only a share is to be sold, it is to be understood that a separate account is kept for that share :—

Touzi No.	Name of mahal and pargana.	Sadar jama of whole estate.	Whether the whole estate is to be sold.	If only a share is to be sold, specification of such share or shares.	Names of proprietors of property to be sold.	If only a share is to be sold, the sadar jama of such share.	If the whole estate is to be sold, the arrears due from it.	If only a share is to be sold, the arrears due from it.
1	2	3	4	5	6	7	8	9
		Rs. A. P.				Rs. A. P.		Rs. A. P.
184 Ejmali	Dihi Puthia with Tatlarpara, pargana Muhammadpur.	1,840 10 0	No ..	13 as. 18 gds. 2 k. 1 62/200 dt. 2 jb. All other shares than that specified will be excluded from the sale.	Bibi Taheratannessa Unmatar Rafia Choudhurani.	1,573 7 8	..	L.R.— 63 2 8 Cess— 19 1 6 82 4 2

This estate is being advertised for sale for instalments of revenue which were due on or before 30th Jaistha 1338 B. S. of which the latest date of payment was 29th June 1931.

Rajshahi, the 15th August 1931. L. G. PINNELL, Collector.

Notification A.

NOTICE is hereby given, under sections 6 and 13, Act XI of 1859, that the undermentioned estate and shares of estate in the district of Rajshahi will be put up for sale at the office of the Collector of that district on the 26th September 1931, at 12 noon, for arrears of revenue and other demands which by law are realizable as arrears of land revenue.

When in columns 5, 7 and 9 of the following statement it is stated that only a share is to be sold, it is to be understood that a separate account is kept for that share :—

Touzi No.	Name of mahal and pargana.	Sadar jama of whole estate.	Whether the whole estate is to be sold.	If only a share is to be sold, specification of such share or shares.	Names of proprietors of property to be sold.	If only a share is to be sold, the sadar jama of such share.	If the whole estate is to be sold, the arrears due from it.	If only a share is to be sold, the arrears due from it.
1	2	3	4	5	6	7	8	9
		Rs. A. P.				Rs. A. P.		Rs. A. P.
222 Ejmali	Shibdebpara, pargana Tegachi.	L. R.— 2,515 9 0 Police— 25 10 0	No ..	7 as. 10 gds. share only. All other shares than that specified will be excluded from the sale.	Bibi Unmatan Fatema and others.	L. R.— 1,179 3 0 Police— 12 0 0	..	L. R.— 24 8 0 Cess— 59 13 0 84 5 0

This estate is being advertised for sale for instalments of revenue which were due on or before the 30th Jaistha 1338 B. S. of which the latest date of payment was 29th June 1931.

Rajshahi, the 15th August 1931. L. G. PINNELL, Collector.

Notification A.

NOTICE is hereby given, under sections 6 and 13, Act XI of 1859, that the undermentioned estate and shares of estate in the district of Rajshahi will be put up for sale at the office of the Collector of that district on the 26th September 1931, at 12 noon, for arrears of revenue and other demands which by law are realizable as arrears of land revenue.

When in columns 5, 7 and 9 of the following statement it is stated that only a share is to be sold, it is to be understood that a separate account is kept for that share :—

Touzi No.	Name of mahal and pargana.	Sadar jama of whole estate.	Whether the whole estate is to be sold.	If only a share is to be sold, specification of such share or shares.	Names of proprietors of property to be sold.	If only a share is to be sold, the sadar jama of such share.	If the whole estate is to be sold, the arrears due from it.	If only a share is to be sold, the arrears due from it.
1	2	3	4	5	6	7	8	9
		Rs. A. P.				Rs. A. P.		Rs. A. P.
222. S.A. No. 2.	Shibdebpara, pargana Tegachi.	2,515 9 0 Police— 25 10 0	No ..	4 as. share only. All other shares than that specified will be excluded from the sale.	Bibi Hafezatannessa Unmatan Fatema Chaudhurani.	L. R.— 628 14 0 Police— 6 7 0	..	L. R.— 70 13 0

This estate is being advertised for sale for instalments of revenue which were due on or before the 30th Jaistha 1338 B. S. of which the latest date of payment was 29th June 1931.

Rajshahi, the 15th August 1931. L. G. PINNELL, Collector.

Notification A.

NOTICE is hereby given, under sections 6 and 13, Act XI of 1859, that the undermentioned estate and shares of estate in the district of Rajshahi will be put up for sale at the office of the Collector of that district on the 20th September 1931, at 12 noon, for arrears of revenue and other demands which by law are realizable as arrears of land revenue.

When in columns 5, 7 and 9 of the following statement it is stated that only a share is to be sold, it is to be understood that a separate account is kept for that share :—

Tauzi No.	Name of mahal and pargana.	Sadar jama of whole estate.	Whether the whole estate is to be sold.	If only a share is to be sold, specification of such share or shares.	Names of proprietors of property to be sold.	If only a share is to be sold, the sadar jama of such share.	If the whole estate is to be sold, the arrears due from it.	If only a share is to be sold, the arrears due from it.
1	2	3	4	5	6	7	8	9
		Rs. A. P.				Rs. A. P.		Rs. A. P.
230, S. A. No. 7.	Dihi Dhankora, pargana Tegachi.	4,556 15 0 Police— 10 11 0	No ..	2 as. 9 gds. 1k. 2 kags share only. All other shares than that specified will be excluded from the sale.	Bibi Hafezatannessa Unmatan Fatema Chaudhury.	703 8 0 Police— 1 10 0	..	L. R.— 75 15 0 Cess— 33 8 0 109 7 0

This estate is being advertised for sale for instalments of revenue which were due on or before the 30th Jaistha 1338 B. S. of which the latest date of payment was 29th June 1931.

Rajshahi, the 15th August 1931.

L. G. PINNELL, Collector.

Notification A.

NOTICE is hereby given, under sections 6 and 13, Act XI of 1859, that the undermentioned estate and shares of estate in the district of Rajshahi will be put up for sale at the office of the Collector of that district on the 26th September 1931, at 12 noon, for arrears of revenue and other demands which by law are realizable as arrears of land revenue :—

Tauzi No.	Name of mahal and pargana.	Sadar jama of whole estate.	Whether the whole estate is to be sold.	If only a share is to be sold, specification of such share or shares.	Names of proprietors of property to be sold.	If only a share is to be sold, the sadar jama of such share.	If the whole estate is to be sold, the arrears due from it.	If only a share is to be sold, the arrears due from it.
1	2	3	4	5	6	7	8	9
		Rs. A. P.				Rs. A. P.	Rs. A. P.	Rs. A. P.
293	Tolihari, pargana Bongaon Khalisha.	1,033 9 0 Police— 11 3 0	Yes ..	....	Ram Ranjan Mallik and others.	....	L.R.— 87 8 0 Cess— 163 0 9 251 1 9	....

This estate is being advertised for sale for instalments of revenue which were due on or before the 30th Jaistha 1338 B. S. of which the latest date of payment was 20th June 1931.

Rajshahi, the 15th August 1931.

L. G. PINNELL, Collector.

Notification A.

NOTICE is hereby given, under sections 6 and 13, Act XI of 1859, that the undermentioned estate and shares of estate in the district of Rajshahi will be put up for sale at the office of the Collector of that district on the 26th September 1931, at 12 noon, for arrears of revenue and other demands which by law are realizable as arrears of land revenue.

When in columns 5, 7 and 9 of the following statement it is stated that only a share is to be sold, it is to be understood that a separate account is kept for that share :—

Tauzi No.	Name of mahal and pargana.	Sadar jama of whole estate.	Whether the whole estate is to be sold.	If only a share is to be sold, specification of such share or shares.	Names of proprietors of property to be sold.	If only a share is to be sold, the sadar jama of such share.	If the whole estate is to be sold, the arrears due from it.	If only a share is to be sold, the arrears due from it.
1	2	3	4	5	6	7	8	9
		Rs. A. P.				Rs. A. P.	Rs. A. P.	Rs. A. P.
480 Ejmali	Dehi Brichapila, pargana Tappe Chapila.	3,274 11 0	No ..	7 annas 10 gandas share only. All other shares than that specified will be excluded from the sale.	Bibi Faizannessa Amatur Rasul and others.	1,535 0 3	..	L. R.— 1,224 5 0 Cess— 264 5 10 Cess for C. D., Pabna— 6 8 6 1,495 3 4 Cost of notice under section 5— 4 8 0 1,490 11 4

This estate is being advertised for sale for instalments of revenue which were due on or before the 30th Jaistha 1338 B. S. of which the latest date of payment was 29th June 1931.

Rajshahi, the 15th August 1931.

L. G. PINNELL, Col

Notification A.

NOTICE is hereby given, under sections 6 and 13, Act XI of 1859, that the undermentioned estate and shares of estate in the district of Rajshahi will be put up for sale at the office of the Collector of that district on the 26th September 1931, at 12 noon, for arrears of revenue and other demands which by law are realizable as arrears of land revenue:—

Tauzi No.	Name of mahal and pargana.	Sadar jama of whole estate.	Whether the whole estate is to be sold.	If only a share is to be sold, specification of such share or shares.	Names of proprietors of property to be sold.	If only a share is to be sold, the sadar jama of such share.	If the whole estate is to be sold, the arrears due from it.	If only a share is to be sold, the arrears due from it.
1	2	3	4	5	6	7	8	9
		Rs. A. P.					Rs. A. P.	
304	Jahanabad, pargana Dhamin.	792 6 0	Yes ..	..	Nalinakshi Chowdhurani.	..	L.R.— 100 0 0 Cess— 12 7 0 112 7 0	..

This estate is being advertised for sale for instalments of revenue which were due on or before the 30th Jaistha 1338 B. S. of which the latest date of payment was 29th June 1931.

Rajshahi, the 15th August 1931. L. G. PINNELL, Collector.

Notification A.

NOTICE is hereby given, under sections 6 and 13, Act XI of 1859, that the undermentioned estate and shares of estate in the district of Rajshahi will be put up for sale at the office of the Collector of that district on the 26th September 1931, at 12 noon, for arrears of revenue and other demands which by law are realizable as arrears of land revenue.

When in columns 5, 7 and 9 of the following statement it is stated that only a share is to be sold, it is to be understood that a separate account is kept for that share :—

Tauzi No.	Name of mahal and pargana.	Sadar jama of whole estate.	Whether the whole estate is to be sold.	If only a share is to be sold, specification of such share or shares.	Names of proprietors of property to be sold.	If only a share is to be sold, the sadar jama of such share.	If the whole estate is to be sold, the arrears due from it.	If only a share is to be sold, the arrears due from it.
1	2	3	4	5	6	7	8	9
		Rs. A. P.				Rs. A. P.		Rs. A. P.
430, S. A. No. 5.	Dehi Brichapila, pargana Tappa Chapila.	3,274 11 0	No ..	4 annas share only .. All other shares than that specified will be excluded from the sale.	Chowdhury Hafez Mahammad Abdul Azim Abu Ahamed *alias* Abol Moktar.	818 10 9	..	Land Revenue. 96 6 0 Cess— 80 12 0 Cess for C. D., Pabna 8 14 0 190 0 0

This estate is being advertised for sale for instalments of revenue which were due on or before the 30th Jaistha 1338 B. S. of which the latest date of payment was 29th June 1931.

Rajshahi, the 15th August 1931. L. G. PINNELL, Collector.

Notification A.

NOTICE is hereby given, under sections 6 and 13, Act XI of 1859, that the undermentioned estate and shares of estate in the district of Rajshahi will be put up for sale at the office of the Collector of that district on the 26th September 1931, at 12 noon, for arrears of revenue and other demands which by law are realizable as arrears of land revenue :—

Tauzi No.	Name of mahal and pargana.	Sadar jama of whole estate.	Whether the whole estate is to be sold.	If only a share is to be sold, specification of such share or shares.	Names of proprietors of property to be sold.	If only a share is to be sold, the sadar jama of such share.	If the whole estate is to be sold, the arrears due from it.	If only a share is to be sold, the arrears due from it.
1	2	3	4	5	6	7	8	9
		Rs. A. P.					Rs. A. P.	
2239	Bongaon Jaigir, pargana Bongaon Jaigir.	1,323 10 0 Police— 13 5 0	Yes ..	....	Hazaratulla Shaha and others.	....	L.R.— 93 12 0 Police— 2 7 0 Cess— 44 15 0 141 2 0	....

This estate is being advertised for sale for instalments of revenue which were due on or before the 30th Jaistha 1338 B. S. of which the latest date of payment was 29th June 1931.

Rajshahi, the 15th August 1931. L. G. PINNELL, Collector.

Notification A.

NOTICE is hereby given, under sections 6 and 13, Act XI of 1859, that the undermentioned estate and shares of estate in the district of Rajshahi will be put up for sale at the office of the Collector of that district on the 26th September 1931, at 12 noon, for arrears of revenue and other demands which by law are realizable as arrears of land revenue :—

Tauzi No.	Name of mahal and pargana.	Sadar jama of whole estate.	Whether the whole estate is to be sold.	If only a share is to be sold, specification of such share or shares.	Names of proprietors of property to be sold.	If only a share is to be sold, the sadar jama of such share.	If the whole estate is to be sold, the arrears due from it.	If only a share is to be sold, the arrears due from it.
1	2	3	4	5	6	7	8	9
		Rs. A. P.					Rs. A. P.	
2278	Dehi Puthia, pargana Mahammadpur.	1,636 1 0	Yes ..	....	Maulvi Chowdhury Hafez Abdul Azim Abu Ahmed *alias* Abul Muktar and others.	....	L.R.— 180 10 0 Cess— 67 5 0 247 15 0	....

This estate is being advertised for sale for instalments of revenue which were due on or before the 30th Jaistha, 1338 B. S., of which the latest date of payment was 29th June 1931.

Rajshahi, the 15th August 1931.

L. G. PINNELL, Collector.

Notification A.

NOTICE is hereby given, under sections 6 and 13, Act XI of 1859, that the undermentioned estate and shares of estate in the district of Rajshahi will be put up for sale at the office of the Collector of that district on the 26th September 1931, at 12 noon, for arrears of revenue and other demands which by law are realizable as arrears of land revenue :—

Tauzi No.	Name of mahal and pargana.	Sadar jama of whole estate.	Whether the whole estate is to be sold.	If only a share is to be sold, specification of such share or shares.	Names of proprietors of property to be sold.	If only a share is to be sold, the sadar jama of such share.	If the whole estate is to be sold, the arrears due from it.	If only a share is to be sold, the arrears due from it.
1	2	3	4	5	6	7	8	9
		Rs. A. P.				Rs. A. P.	Rs. A. P.	Rs. A. P.
2281	Dehi Puthia, pargana Mahammadpur.	715 13 0	Yes ..	....	Bibi Faizannesa Ummata Rasul and others.	....	L. R.— 63 4 0 Cess— 21 13 3 85 1 3	....

This estate is being advertised for sale for instalments of revenue which were due on or before the 30th Jaistha, 1338 B. S., of which the latest date of payment was 29th June 1931.

Rajshahi, the 15th August 1931.

L. G. PINNELL, Collector.

Notification A.

NOTICE is hereby given, under sections 6 and 13, Act XI of 1859, that the undermentioned estate and shares of estate in the district of Rajshahi will be put up for sale at the office of the Collector of that district on the 26th September 1931, at 12 noon, for arrears of revenue and other demands which by law are realizable as arrears of land revenue.

When in columns 5, 7 and 9 of the following statement it is stated that only a share is to be sold, it is to be understood that a separate account is kept for that share :—

Tauzi No.	Name of mahal and pargana.	Sadar jama of whole estate.	Whether the whole estate is to be sold.	If only a share is to be sold, specification of such share or shares.	Names of proprietors of property to be sold.	If only a share is to be sold, the sadar jama of such share.	If the whole estate is to be sold, the arrears due from it.	If only a share is to be sold, the arrears due from it.
1	2	3	4	5	6	7	8	9
		Rs. A. P.				Rs. A. P.	Rs. A. P.	Rs. A. P.
2360 Ejmali.	Dehi Ranabari, pargana Mahammadpur.	R. R.— 1,506 15 0 Police— 11 0 0	No ..	7 as. 10 gds. share only. All other shares than that specified will be excluded from the sale.	Bibi Faizannesa Amatar Rasul and others.	L. R.— 706 6 0 Police— 5 2 0	..	L. R.— 6 9 0 Cess— 30 0 0 36 9 0

This estate is being advertised for sale for instalments of revenue which were due on or before the 30th Jaistha, 1338 B. S., of which the latest date of payment was 29th June 1931.

Rajshahi, the 15th August 1931.

L. G. PINNELL, Collector.

Notification A.

NOTICE is hereby given, under sections 6 and 13, Act XI of 1859, that the undermentioned estate and shares of estate in the district of Rajshahi will be put up for sale at the office of the Collector of that district on the 26th September 1931, at 12 noon, for arrears of revenue and other demands which by law are realizable as arrears of land revenue :—

Tauzi No.	Name of mahal and pargana.	Sadar jama of whole estate.	Whether the whole estate is to be sold.	If only a share is to be sold, specification of such share or shares.	Names of proprietors of property to be sold.	If only a share is to be sold, the sadar jama of such share.	If the whole estate is to be sold, the arrears due from it.	If only a share is to be sold, the arrears due from it.
1	2	3	4	5	6	7	8	9
2280	Dehi Puthia, pargana Mahammadpur.	Rs. A. P. 715 13 0	Yes ,,	..	Maulvi Khandkar Mahammad Mahasin and others.	..	Rs. A. P. L.R.— 80 9 0 Cess— 28 3 0 108 12 0	..

This estate is being advertised for sale for instalments of revenue which were due on or before the 30th Jaistha, 1338 B.S., of which the latest date of payment was 29th June 1931.

Rajshahi, the 15th August 1931. L. G. PINNELL, Collector.

Notification A.

NOTICE is hereby given, under sections 6 and 13, Act XI of 1859, that the undermentioned estate and shares of estate in the district of Rajshahi will be put up for sale at the office of the Collector of that district on the 26th September 1931, at 12 noon, for arrears of revenue and other demands which by law are realizable as arrears of land revenue.

When in columns 5, 7 and 9 of the following statement it is stated that only a share is to be sold, it is to be understood that a separate account is kept for that share :—

Tauzi No.	Name of mahal and pargana.	Sadar jama of whole estate.	Whether the whole estate is to be sold.	If only a share is to be sold, specification of such share or shares.	Names of proprietors of property to be sold.	If only a share is to be sold, the sadar jama of such share.	If the whole estate is to be sold, the arrears due from it.	If only a share is to be sold, the arrears due from it.
1	2	3	4	5	6	7	8	9
2361 Ejmali	Dehi Ranabari with Parishon, pargana Mahammadpur.	Rs. A. P. L. R.— 1,507 2 0 Police— 11 0 0	No ..	14 annas share only All other shares than that specified will be excluded from the sale.	Chowdhury Mahamed Hafez Quadir and others.	Rs. A. P. L. R.— 1,318 12 0 Police— 9 10 0	Rs. A. P. ..	Rs. A. P. L. R.— 86 8 0

This estate is being advertised for sale for instalments of revenue which were due on or before the 30th Jaistha, 1338 B. S., of which the latest date of payment was 29th June 1931.

Rajshahi, the 15th August 1931. L. G. PINNELL, Collector.

Notification A.

NOTICE is hereby given, under sections 6 and 13, Act XI of 1859, that the undermentioned estates and shares of estates in the district of Dacca will be put up for sale at the office of the Collector of that district on the 26th September 1931, at 12 noon, for arrears of revenue and other demands which by law are realizable as arrears of land revenue.

When in columns 5, 7 and 9 of the following statement it is stated that only a share is to be sold, it is to be understood that a separate account is kept for that share :—

Tauzi No.	Name of mahal and pargana.	Sadar jama of whole estate.	Whether the whole estate is to be sold.	If only a share is to be sold, specification of such share or shares.	Names of proprietors of property to be sold.	If only a share is to be sold, the sadar jama of such share.	If the whole estate is to be sold, the arrears due from it.	If only a share is to be sold, the arrears due from it.
1	2	3	4	5	6	7	8	9
		Rs. A. P.				Rs. A. P.		Rs A. P.
31	Zamindari Ram Krishna Basu Chowdhuri, pargana Durgapur.	5,841 7 6	..	Residue— Part I—15 gds. 1 kt. 2 tils. Part II—1a. 8 gds. 3cr. 2 kt. 12 tils. Part III—5 as. 1 gd. 2 cr. 2 kt. 12 tils. Part IV—5 as. 10 gds. 3 cr. 2 kt. Part V—5 as. 10 gds. 3 cr. 2 kt. Part VI—5 as. 10 gds. 3 cr. 2 kt. 1 til. Part VII—3 as. 4 gds. 2 cr. 2 kt. 5 tils. Part VIII—6 as. 7 gds. 2 cr. 6 tils. Part IX—7 as. 5 gds. Part X—6 as. 12 gds. 2 cr. 18 tils. Part XI—5 as. 10 gds. 3 cr. 2 kt. 1 til. Part XII—9 gds. 2 cr. 18 tils. Part XIII—5 as. 10 gds. 3 cr. 2 kt. Part XIV—1 a. 9 gds. 2 cr. 2 kt. Part XV—5 as. 10 gds. 3 cr. 2 kt. 1 til only. All other shares than that specified above will be excluded from sale. Part I—Separate account Nos. 1, 2, 5, 7-16, 18, 19-24, 26 and 30. Hishya 15 as. 4 gds. 3 cr. 1 kt. 18 tils. Part II—Separate account Nos. 2, 16, 27 29 2 and 33. Hishya 14 as. 11 gds. 8 tils. Part III—Separate account Nos. 2, 3, 6, 11-16, 18, 26, 30 and 31. Hishya 10 as. 18 gds. 1 cr. 8 tils. Part IV—Separate account Nos. 2, 11-16, 26 and 30. Hishya 10 as. 9 gds. 1 kt. Part V—Separate account Nos. 2, 11-16, 26 and 30. Hishya 10 as. 9 gds. 1 kt. Part VI—Separate account Nos. 2, 11-16, 26 and 30. Hishya 10 as. 9 gds. 19 tils. Part VII—Separate account Nos. 2, 4, 11-18. Hishya 12 as. 15 gds. 1 cr. 15 tils. Part VIII—Separate account Nos. 2, 11-16, 22, 26 and 30. Hishya 9 as. 12 gds. 1 cr. 2 kt. 14 tils. Part IX—Separate account Nos. 2, 11-16, 22 and 30. Hishya 8 as. 15 gds. Part X—Separate account Nos. 2, 11-16 and 30. Hishya 9 as. 7 gds. 1 cr. 2 kt. 2 tils. Part XI—Separate account Nos. 2, 11-16, 26 and 30. Hishya 10 as. 9 gds. 19 tils.	Pratima Sundari Chowdhurani and others. Hem Chandra Das and others. Ananda Mohan Shaha and others. Pratima Sundari Chowdhurani and others. Ditto. Ditto. Radharani Chowdhurani, executrix to the estate of Prasanna Kumar Ray and others. Sudhir Chandra Das and others. Ditto. Ditto. Ditto. Ditto. Ditto. Ditto. Ditto.	1,395 1 3	..	151 13 9

Tauzi No.	Name of mahal and pargana.	Sadar jama of whole estate.	Whether the whole estate is to be sold.	If only a share is to be sold, specification of such share or shares.	Names of proprietors of property to be sold.	If only a share is to be sold, the sadar jama of such share.	If the whole estate is to be sold, the arrears due from it.	If only a share is to be sold, the arrears due from it.
1	2	3	4	5	6	7	8	9
		Rs. A. P.		Part XII—Separate account Nos. 2, 16 and 34. Hishya 15 as. 10 gds. 1 cr. 2 kt. 2 tils. Part XIII—Separate account Nos. 2, 11-16, 26 and 30. Hishya 10 as. 9 gds. 1 kt. Part XIV—Separate account Nos. 2, 11-16, 25, 26 and 30. Hishya 14 as. 10 gds. 1 cr. 1 kt. Part XV—Separate account Nos. 2, 11-16, 26 and 30. Hishya 10 as. 9 gds. 19 tils only.		Rs. A. P.	Rs. A. P.
315	Zamindari Mahajan Naba Krishna Bahadur, pargana Tappe Habeli, Mamudpur.	1,547 11 9	16 annas	....	Prafulla Nalini Debi	..	278 5 9	..
9069	Deara Mahal Char Kukurhati, pargana Khallabad.	1,788 8 0	16 annas	....	Sudhir Chandra Das and others.	..	153 2 0	..
9762	Mayadi Mahal Char Dilarpur, pargana Bardakhat.	4,775 15 8	16 annas	....	Bepin Behari Saha Sardar and others.	..	1,190 14 3	..
9964	Zamindari Sambu Chandra Chowdhuri, pargana Tappe Ran Bhawal.	603 9 0	16 annas	....	Satyendra Chandra Chowdhuri.	..	112 4 0	..
10408	Daimi Mahal Char Kalmi, pargana Sinduri.	1,339 6 7	..	Separate account No. 1 for 8 annas share only. All other shares than that specified above will be excluded from sale. Residue and separate account No. 2. Hishya 8 annas.	Satya Charan Datta.	669 11 4	..	85 13 2
10622	Deara Mahal Char Gobindapur, pargana Sinduri.	2,801 13 0	16 annas	....	Surendra Chandra Datta and others.	..	1,401 13 0	..
10804	Deara Mahal Kunjanagar, pargana Bikrampur.	1,288 0 0	16 annas	....	Manmatha Nath Basak and others.	..	322 0 0	..
10847	Deara Mahal Char Masura, pargana Bikrampur.	2,441 0 0	16 annas	....	Khetra Mohan Poddar and others.	..	229 0 0	..
11037	Taluk Char Binodpur, pargana Makimpur.	953 5 0	16 annas	....	Manomohan Neogi and others.	..	129 0 3	..
15564	Mayadi Mahal Char Kamrangi, pargana Jahangirnagar.	1,389 12 0	..	Separate account No. 1 for 8 annas share only. The residue share of 8 annas only will be excluded from sale.	Mrs. Mariam Abraham Aviet and others.	694 14 0	..	94 14 0
15642	Deara Mahal Char Saidpur, pargana Ran Bhawal.	555 0 0	16 annas	....	Mahammad Barkatulla and others.	..	100 0 0	..
15780	Deara Mahal Ruhitpur, pargana Jahangirnagar.	1,665 0 0	16 annas	....	Ananda Kumari Debi and others.	..	99 8 4	..
15862	Baherchar No. 164, pargana Bardakhat.	5,686 5 0	..	Residue—Hisya 2 as. 1 gd. 1cr. 2 kt. 10 tils share. Separate account Nos. 1-29.—Hishya 13 as. 18 gds. 2 cr. 10 tils will be excluded from sale.	Gunabala Ray Chowdhurani and others.	736 8 9	..	122 2 4
15862	Ditto ..	5,686 5 0	..	Separate account No. 2 for 2 as. 13 gds 1 cr. 1 kt. Residue and separate account Nos. 1 and 3-29.—Hishya 13 as. 6 gds. 2cr. 2 kt. share will be excluded from sale.	Bankim Chandra Ray Chowdhuri, as manager on behalf of Trailokya Nath Ray Chowdhuri.	947 11 6	..	175 15 0
16032	Mayadi Mahal Char Dilarpur Nasaraddi Sarkar, pargana Bardakhat.	2,503 7 5	16 annas	....	Lalit Mohan Ray and others.	..	626 0 0	..
16060	Daimi Mahal Tarki Char, Tappe Ran Bhawal.	831 11 1	..	Separate account No. 1 for 9 as. 16 gds. 2kt. 6 tils share only. Residue and separate account No. 2.—Hishya 6 as. 3 gds. 3cr. 14 tils share will be excluded from sale.	Hem Chandra Chakravarty and others.	509 8 7	..	124 13 6
16090	Deara Mahal Kismat Haryaz Birendra Nath Ray Chowdhuri, pargana Isakabad.	1,069 4 7	16 annas	....	Birendra Nath Ray Chowdhuri.	..	129 12 0	..

Dacca, the 15th August 1931.

R. M. CHAKRAVARTI, Collector.

Notification A.

NOTICE is hereby given, under section 6, Act XI of 1859, that the undermentioned estate and shares of estate in the district of Rangpur will be put up for sale at the office of the Collector of that district on the 26th September 1931, at 11 a.m., for arrears of revenue and other demands which by law are realizable as arrears of land revenue :—

Tauzi No.	Name of mahal and pargana.	Sadar jama of whole estate.	Whether the whole estate is to be sold.	If a share is to be sold, specification of such share or shares.	Names of proprietors of property to be sold.	If only a share is to be sold, the sadar jama of such share.	If the whole estate is to be sold, the arrears due from it.	If only a share is to be sold, the arrears due from it.
1	2	3	4	5	6	7	8	9
		Rs. A. P.				Rs. A. P.	Rs. A. P.	Rs. A. P.
20	Manthana hisya 8 annas, pargana Manthana.	11,965 10 2	Whole ..	16 annas	Raja Gopal Lal Roy Bahadur.	....	1,235 10 6	....

This estate is being advertised for sale for instalments of revenue which were due on or before the 30th Jaistha, 1338 B. S., of which the latest date of payment was 28th June 1931.

Rangpur, the 15th August 1931. T. M. Dow, Collector.

Notification A.

NOTICE is hereby given, under section 6, Act XI of 1859, that the undermentioned estate and shares of estate in the district of Rangpur will be put up for sale at the office of the Collector of that district on the 26th September 1931, at 11 a.m., for arrears of revenue and other demands which by law are realizable as arrears of land revenue :—

Tauzi No.	Name of mahal and pargana.	Sadar jama of whole estate.	Whether the whole estate is to be sold.	If a share is to be sold, specification of such share or shares.	Names of proprietors of property to be sold.	If only a share is to be sold, the sadar jama of such share.	If the whole estate is to be sold, the arrears due from it.	If only a share is to be sold, the arrears due from it.
1	2	3	4	5	6	7	8	9
		Rs. A. P.					Rs. A. P.	
77	Maguta O'gayraha, Chakley Kazirhat, Fatepur.	9,056 11 0	Whole ..	16 annas	Raja Gopal Lal Roy Bahadur.	..	927 15 9	....

This estate is being advertised for sale for instalments of revenue which were due on or before the 30th Jaistha, 1338 B. S., of which the latest date of payment was 28th June 1931.

Rangpur, the 15th August 1931. T. M. Dow, Collector.

Notification A.

NOTICE is hereby given, under section 6, Act XI of 1859, that the undermentioned estate and shares of estate in the district of Rangpur will be put up for sale at the office of the Collector of that district on the 26th September 1931, at 11 a.m., for arrears of revenue and other demands which by law are realizable as arrears of land revenue :—

Tauzi No.	Name of mahal and pargana.	Sadar jama of whole estate.	Whether the whole estate is to be sold.	If a share is to be sold, specification of such share or shares.	Names of proprietors of property to be sold.	If only a share is to be sold, the sadar jama of such share.	If the whole estate is to be sold, the arrears due from it.	If only a share is to be sold, the arrears due from it.
1	2	3	4	5	6	7	8	9
		Rs. A. P.				Rs. A. P.	Rs. A. P.	Rs. A. P.
82	Musa Poalighat O'gayraha, pargana Chakley Kazirhat.	6,408 5 4	Whole	16 annas ..	Raja Gopal Lal Roy Bahadur.	..	667 8 7	..

This estate is being advertised for sale for instalments of revenue which were due on or before the 30th Jaistha, 1338 B. S., of which the latest date of payment was 28th June 1931.

Rangpur, the 15th August 1931. T. M. Dow, Collector.

Notification A.

NOTICE is hereby given, under section 6, Act XI of 1859, that the undermentioned estate and shares of estate in the district of Rangpur will be put up for sale at the office of the Collector of that district on 26th September 1931, at 11 a.m., for arrears of revenue and other demands which by law are realizable as arrears of land revenue :—

Tauzi No.	Name of mahal and pargana.	Sadar jama of whole estate.	Whether the whole estate is to be sold.	If a share is to be sold, specification of such share or shares.	Names of proprietors of property to be sold.	If only a share is to be sold, the sadar jama of such share.	If the whole estate is to be sold, the arrears due from it.	If only a share is to be sold, the arrears due from it.
1	2	3	4	5	6	7	8	9
		Rs. A. P.					Rs. A. P.	
185	Kunja Sakpala hisya 8 annas, pargana Alihat, Kunja-Sakpala, Bairi-Ghoraghat, Pagail.	5,181 10 2	Whole	16 annas ..	Raja Gopal Lal Roy Bahadur.	..	180 7 10	..

This estate is being advertised for sale for instalments of revenue which were due on or before the 30th Jaistha, 1338 B. S., of which the latest date of payment was 28th June 1931.

Rangpur, the 15th August 1931. T. M. Dow, Collector.

Notification A.

NOTICE is hereby given under section 6, Act XI of 1859, that the undermentioned estate and shares of estate in the district of Rangpur will be put up for sale at the office of the Collector of that district on 26th September 1931, at 11 a. m., for arrears of revenue and other demands which by law are realizable as arrears of land revenue :—

Tauzi No.	Name of mahal and rgana.	Sadar jama of whole estate.	Whether the whole estate is to be sold.	If a share is to be sold, specification of such share or shares.	Names of proprietors of property to be sold.	If only a share is to be sold, the sadar jama of such share.	If the whole estate is to be sold, the arrears due from it.	If only a share is to be sold, the arrears due from it.
1	2	3	4	5	6	7	8	9
		Rs. A. P.					Rs. A. P.	
248	Radhakrishnapur O'gayraha mauza, pargana Andua.	9,830 5 1	Whole ..	16 annas ..	Raja Gopal Lal Roy Bahadur.	..	615 5 1	..

This estate is being advertised for sale for instalments of revenue which were due on or before the 30th Jaistha, 1338 B. S., of which the latest date of payment was 28th June 1931.

Rangpur, the 15th August 1931. T. M. Dow, Collector.

Notification A.

NOTICE is hereby given under section 6, Act XI of 1859, that the undermentioned estate and shares of estate in the district of Rangpur will be put up for sale at the office of the Collector of that district on 26th September 1931, at 11 a.m., for arrears of revenue and other demands which by law are realizable as arrears of land revenue :—

Tauzi No.	Name of mahal and pargana.	Sadar jama of whole estate.	Whether the whole estate is to be sold.	If a share is to be sold, specification of such share or shares.	Names of proprietors of property to be sold.	If only a share is to be sold, the sadar jama of such share.	If the whole estate is to be sold, the arrears due from it.	If only a share is to be sold, the arrears due from it.
1	2	3	4	5	6	7	8	9
		Rs. A. P.					Rs. A. P.	
506	Kunja Sakpala hisya 8 annas, pargana Alihat, Kunja Sakpala, Bairi-Ghoraghat, Pagail.	5,181 10 1	Whole	16 annas ..	Brindaban Chandra Roy Choudhury.	..	182 2 6	..

This estate is being advertised for sale for instalments of revenue which were due on or before the 30th Jaistha, 1338 B. S., of which the latest date of payment was 28th June 1931.

Rangpur, the 15th August 1931. T. M. Dow, Collector.

Notification A.

NOTICE is hereby given under section 6, Act XI of 1859, that the undermentioned estate and shares of estate in the district of Rangpur will be put up for sale at the office of the Collector of that district on 26th September 1931, at 11 a. m., for arrears of revenue and other demands which by law are realizable as arrears of land revenue :—

Tauzi No.	Name of mahal and pargana.	Sadar jama of whole estate.	Whether the whole estate is to be sold.	If a share is to be sold, specification of such share or shares.	Names of proprietors of property to be sold.	If only a share is to be sold, the sadar jama of such share.	If the whole estate is to be sold, the arrears due from it.	If only a share is to be sold, the arrears due from it.
1	2	3	4	5	6	7	8	9
		Rs. A. P.					Rs. A. P.	
693	Babanpur, pargana Babanpur.	5,289 1 5	Whole ..	16 annas ..	Ram Ratan, Raghu Nandan, Niratan Roy Chaudhury and others.	..	586 0 10	..

This estate is being advertised for sale for instalments of revenue which were due on or before the 30th Jaistha, 1338 B. S., of which the latest date of payment was 28th June 1931.

Rangpur, the 15th August 1931.

T. M. Dow, Collector.

Notification A.

NOTICE is hereby given, under sections 6 and 13, Act XI of 1859, that the undermentioned estate and shares of estate in the district of Rangpur will be put up for sale at the office of the Collector of that district on 26th September 1931, at 11 a.m., for arrears of revenue and other demands which by law are realizable as arrears of land revenue.

When in columns 5, 7 and 9 of the following statement it is stated that only a share is to be sold, it is to be understood that a separate account is kept for that share :—

Tauzi No.	Name of mahal and pargana.	Sadar jama of whole estate.	Whether the whole estate is to be sold.	If a share is to be sold, specification of such share or shares.	Names of proprietors of property to be sold.	If only a share is to be sold, the sadar jama of such share.	If the whole estate is to be sold, the arrears due from it.	If only a share is to be sold, the arrears due from it.
1	2	3	4	5	6	7	8	9
		Rs. A. P.				Rs. A. P.		Rs. A. P.
161 Residuary.	Kundi hisya 4 annas, pargana Kundi.	12,802 2 8	No ..	16 annas share of Alamnagar mauza in Group "A." 16 annas share of Basantapur and other mauzas in Group "B." 16 annas share of Ajodhyapur and other mauzas in Group "C." 8 annas share of Madhabpur kismat and other mauzas in Group "E." 16 annas share of Nurpur kismat mauza in Group "F." 16 annas share of Barabari Raghu kismat and other mauzas in Group "L." 16 annas share of Dighal-Tari and other mauzas in Group "M." 16 annas share of Barabari kismat and other mauzas in Group "N." All other shares besides that specified will be excluded from the sale.	Rai Mritunjoy Roy Choudhury Bahadur and others.	10,750 3 10	..	982 4 11

This estate is being advertised for sale for instalments of revenue which were due on or before the 30th Jaistha, 1338 B.S., of which the latest date of payment was 28th June 1931.

Rangpur, the 15th August 1931.

T. M. Dow, Collector.

Notification A.

NOTICE is hereby given, under sections 6 and 13, Act XI of 1859, that the undermentioned estate and shares of estate in the district of Rangpur will be put up for sale at the office of the Collector of that district on 26th September 1931, at 11 a.m., for arrears of revenue and other demands which by law are realizable as arrears of land revenue.

When in columns 5, 7 and 9 of the following statement it is stated that only a share is to be sold, it is to be understood that a separate account is kept for that share :—

Tauzi No.	Name of mahal and pargana.	Sadar jama of whole estate.	Whether the whole estate is to be sold.	If only a share is to be sold, specification of such share or shares.	Names of proprietors of property to be sold.	If only a share is to be sold, the sadar jama of such share.	If the whole estate is to be sold, the arrears due from it.	If only a share is to be sold, the arrears due from it.
1	2	3	4	5	6	7	8	9
		Rs. A. P.				Rs. A. P.		Rs. A. P.
224 Residuary.	Batasan O'gayraha, pargana Batasan.	42,141 7 7	No ..	16 annas share of Abhirampur and other mauzas in Group "A." 16 annas share of Atpania and other mauzas (in pargana Shaghata) in Group "B." 8 annas share of Akbarpur and other mauzas (pargana Bagduar) in Group "C." 8 annas share of Durgamati and other mauzas in Group "D." 8 annas share of Raghunathpur and other mauzas in Group "E." All other shares besides that specified will be excluded from the sale.	Bonwari, Mukunda Das, Nandi Deb and another.	30,232 6 2	..	446 3 0

This estate is being advertised for sale for instalments of revenue which were due on or before the 30th Jaistha, 1338 B. S., of which the latest date of payment was 28th June 1931.

Rangpur, the 15th August 1931. T. M. Dow, Collector.

Notification A.

NOTICE is hereby given, under sections 6 and 13, Act XI of 1859, that the undermentioned estate and shares of estate in the district of Rangpur will be put up for sale at the office of the Collector of that district on 26th September 1931, at 11 a. m., for arrears of revenue and other demands which by law are realizable as arrears of land revenue.

When in columns 5, 7 and 9 of the following statement it is stated that only a share is to be sold, it is to be understood that a separate account is kept for that share :—

Tauzi No.	Name of mahal and pargana.	Sadar jama of whole estate.	Whether the whole estate is to be sold.	If a share is to be sold, specification of such share or shares.	Names of proprietors of property to be sold.	If only a share is to be sold, the sadar jama of such share.	If the whole estate is to be sold, the arrears due from it.	If only a share is to be sold, the arrears due from it.
1	2	3	4	5	6	7	8	9
		Rs. A. P.				Rs. A. P.		Rs. A. P.
265-11	Chapra O'gayraha mauza, pargana Chakley Kazirhat, Fatepur Boda Purbabhag, Kakina Basatti Udashi.	8,936 8 10	No ..	16 annas share of Ram Dakua mauza in Group "F." All other shares besides that specified will be excluded from the sale.	Raja Gopal Lal Roy Bahadur.	634 2 0	..	66 4 8

This estate is being advertised for sale for instalments of revenue which were due on or before the 30th Jaistha, 1338 B. S., of which the latest date of payment was the 28th June 1931.

Rangpur, the 15th August 1931. T. M. Dow, Collector.

Notification A.

NOTICE is hereby given, under sections 6 and 13, Act XI of 1859, that the undermentioned estate and shares of estate in the district of Rangpur will be put up for sale at the office of the Collector of that district on 26th September 1931, at 11 a. m., for arrears of revenue and other demands which by law are realizable as arrears of land revenue.

When in columns 5, 7 and 9 of the following statement it is stated that only a share is to be sold, it is to be understood that a separate account is kept for that share :—

Tauzi No.	Name of mahal and pargana.	Sadar jama of whole estate.	Whether the whole estate is to be sold.	If a share is to be sold, specification of such share or shares.	Names of proprietors of property to be sold.	If only a share is to be sold, the sadar jama of such share.	If the whole estate is to be sold, the arrears due from it.	If only a share is to be sold, the arrears due from it.
1	2	3	4	5	6	7	8	9
		Rs. A. P.				Rs. A. P.		Rs. A. P.
693 Residuary.	Babanpur, pargana Babanpur.	5,289 1 5	No ..	3 as. 12 gds. 2 k. 1½ kag share of the entire mahal. All other shares besides that specified will be excluded from the sale.	Raghunath Roy Chondhurt and others.	1,200 7 7	..	128 7 7

This estate is being advertised for sale for instalments of revenue which were due on or before the 30th Jaistha 1338 B. S. of which the latest date of payment was the 28th June 1931.

Rangpur, the 13th August 1931. T. M. Dow, Collector.

Notification A.

NOTICE is hereby given, under sections 6 and 13, Act XI of 1859, that the undermentioned estate and shares of estate in the district of Rangpur will be put up for sale at the office of the Collector of that district on 26th September 1931, at 11 a. m., for arrears of revenue and other demands which by law are realizable as arrears of land revenue.

When in columns 5, 7 and 9 of the following statement it is stated that only a share is to be sold, it is to be understood that a separate account is kept for that share :—

Tauzi No.	Name of mahal and pargana.	Sadar jama of whole estate.	Whether the whole estate is to be sold.	If a share is to be sold, specification of such share or shares.	Names of proprietors of property to be sold.	If only a share is to be sold, the sadar jama of such share.	If the whole estate is to be sold, the arrears due from it.	If only a share is to be sold, the arrears due from it.
1	2	3	4	5	6	7	8	9
		Rs. A. P.				Rs. A. P.		Rs. A. P.
693-3	Babanpur, pargana Babanpur.	5,289 1 5	No ..	1 a. 12 gds. 2 kara share of the entire mahal. All other shares besides that specified will be excluded from the sale.	Jogendra Nath Mukherjee and Mahammad Hossain Talukdar.	537 2 9	..	48 14 3

This estate is being advertised for sale for instalments of revenue which were due on or before the 30th Jaistha 1338 B. S. of which the latest date of payment was the 28th June 1931.

Rangpur, the 15th August 1931. T. M. Dow, Collector.

Notification A.

NOTICE is hereby given, under sections 6 and 13, Act XI of 1859, that the undermentioned estate and shares of estate in the district of Rangpur will be put up for sale at the office of the Collector of that district on 26th September 1931, at 11 a.m., for arrears of revenue and other demands which by law are realizable as arrears of land revenue.

When in columns 5, 7 and 9 of the following statement it is stated that only a share is to be sold, it is to be understood that a separate account is kept for that share :—

Tauzi No.	Name of mahal and pargana.	Sadar jama of whole estate.	Whether the whole estate is to be sold.	If a share is to be sold, specification of such share or shares.	Names of proprietors of property to be sold.	If only a share is to be sold, the sadar jama of such share.	If the whole estate is to be sold, the arrears due from it.	If only a share is to be sold, the arrears due from it.
1	2	3	4	5	6	7	8	9
		Rs. A. P.				Rs. A. P.		Rs. A. P.
693-1	Babanpur, pargana Babanpur.	5,289 1 5	No ..	2 annas 2 gandas share of the entire mahal. All other shares besides that specified will be excluded from the sale.	Jagadish Chandra Roy Choudhury.	694 5 3	..	126 9 0

This estate is being advertised for sale for instalments of revenue which were due on or before the 30th Jaistha of which the latest date of payment was the 28th June 1931.

Rangpur, the 15th August 1931. T. M. Dow, Collector.

Notification A.

NOTICE is hereby given, under sections 6 and 13, Act XI of 1859, that the undermentioned estate and shares of estate in the district of Rangpur will be put up for sale at the office of the Collector of that district on 26th September 1931, at 11 a.m., for arrears of revenue and other demands which by law are realizable as arrears of land revenue.

When in columns 5, 7 and 9 of the following statement it is stated that only a share is to be sold, it is to be understood that a separate account is kept for that share :—

Tauzi No.	Name of mahal and pargana.	Sadar jama of whole estate.	Whether the whole estate is to be sold.	If a share is to be sold, specification of such share or shares.	Names of proprietors of property to be sold.	If only a share is to be sold, the sadar jama of such share.	If the whole estate is to be sold, the arrears due from it.	If only a share is to be sold the arrears due from it.
1	2	3	4	5	6	7	8	9
		Rs. A. P.				Rs. A. P.		Rs. A. P.
693-4	Babanpur, pargana Babanpur.	5,289 1 5	No ..	4 annas 18 gandas share of the entire mahal. All other shares besides that specified will be excluded from the sale.	Kailkesh Chandra Chattorjee.	1,010 12 7	..	204 9 8

This estate is being advertised for sale for instalments of revenue which were due on or before the 30th Jaistha of which the latest date of payment was the 28th June 1931.

Rangpur, the 15th August 1931. T. M. Dow, Collector.

Notification A.

NOTICE is hereby given, under sections 6 and 13, Act XI of 1859, that the undermentioned estate and shares of estate in the district of Rangpur will be put up for sale at the office of the Collector of that district on 26th September 1931, at 11 a.m., for arrears of revenue and other demands which by law are realizable as arrears of land revenue.

When in columns 5, 7 and 9 of the following statement it is stated that only a share is to be sold, it is to be understood that a separate account is kept for that share :—

Tauzi No.	Name of mahal and pargana.	Sadar jama of whole estate.	Whether the whole estate is to be sold.	If a share is to be sold, specification of such share or shares.	Names of proprietors of property to be sold.	If only a share is to be sold, the sadar jama of such share.	If the whole estate is to be sold, the arrears due from it.	If only a share is to be sold, the arrears due from it.
1	2	3	4	5	6	7	8	9
		Rs. A. P.				Rs. A. P.		Rs. A. P.
42-2	Kazirhat hisya 4 annas, pargana Chakley Kazirhat.	10,435 0 4	No ..	2 annas share in mauza Bagulagari in Group "A." 2 annas share of mauza Pochapukur kismat in Group "B." 2 annas share of mauza Mathana kismat in Group "C." 2 annas share of mauza Porarkuthi kismat in Group "D." 2 annas share of mauza Khutamara taluk in Group "E." 2 annas share of mauza Madatinagar in Group "F." All other shares besides that specified will be excluded from the sale.	Nanda Kishore Lala and others.	1,304 0 10	..	136 15 4

This estate is being advertised for sale for instalments of revenue which were due on or before the 30th Jaistha 1338 B. S. of which the latest date of payment was 28th June 1931.

Rangpur, the 15th August 1931. T. M. Dow, Collector

Notification A.

NOTICE is hereby given, under sections 6 and 13, Act XI of 1859, that the undermentioned estate and shares of estate in the district of Rangpur will be put up for sale at the office of the Collector of that district on 26th September 1931, at 11 a. m., for arrears of revenue and other demands which by law are realizable as arrears of land revenue.

When in columns 5, 7 and 9 of the following statement it is stated that only a share is to be sold, it is to be understood that a separate account is kept for that share :—

Tauzi No.	Name of mahal and pargana.	Sadar jama of whole estate.	Whether the whole estate is to be sold.	If a share is to be sold, specification of such share or shares.	Names of proprietors of property to be sold.	If only a share is to be sold, the sadar jama of such share.	If the whole estate is to be sold, the arrears due from it.	If only a share is to be sold, the arrears due from it.
1	2	3	4	5	6	7	8	9
		Rs. A. P.				Rs. A. P.		Rs. A. P.
693-5	Babanpur, pargana Babanpur.	5,289 1 5	No ..	3 as. 14 g. 2k. 2 kt. 1½ danti 3 kag share of the entire estate. All other shares besides that specified will be excluded from the sale.	Khitish Chandra Roy Choudhury and Jatindra Nath Roy Choudhury.	1,237 5 3	..	100 0 0

This estate is being advertised for sale for instalments of revenue which were due on or before the 30th Jaistha 1338 B. S. of which the latest date of payment was the 28th June 1931.

Rangpur, the 15th August 1931. T. M. Dow, Collector

Notification A.

NOTICE is hereby given under section 6, Act XI of 1859, that the undermentioned estate and shares of estate in the district of Rangpur will be put up for sale at the office of the Collector of that district on 26th September 1931, at 11 a.m., for arrears of revenue and other demands which by law are realizable as arrears of land revenue :—

Tauzi No.	Name of mahal and pargana.	Sadar jama of whole estate.	Whether the whole estate is to be sold.	If a share is to be sold, specification of such share or shares.	Names of proprietors of property to be sold.	If only a share is to be sold, the sadar jama of such share.	If the whole estate is to be sold, the arrears due from it.	If only a share is to be sold, the arrears due from it.
1	2	3	4	5	6	7	8	9
		Rs. A. P.					Rs. A. P.	
2	Ramdhan O'gayraha mauza, pargana Chakley Fatepur.	4,517 2 11	Whole	16 annas ..	Raja Gopal Lal Roy Bahadur.	..	467 2 1	..

This estate is being advertised for sale for instalments of revenue which were due on or before the 30th Jaistha 1338 B. S. of which the latest date of payment was the 28th June 1931.

Rangpur, the 15th August 1931. T. M. Dow, Collector.

Notification A.

NOTICE is hereby given, under section 6, Act XI of 1859, that the undermentioned estate and shares of estate in the district of Rangpur will be put up for sale at the office of the Collector of that district on 26th September 1931, at 11 a.m., for arrears of revenue and other demands which by law are realizable as arrears of land revenue :—

Tauzi No.	Name of mahal and pargana.	Sadar jama of whole estate.	Whether the whole estate is to be sold.	If a share is to be sold, specification of such share or shares.	Names of proprietors of property to be sold.	If only a share is to be sold, the sadar jama of such share.	If the whole estate is to be sold, the arrears due from it.	If only a share is to be sold, the arrears due from it.
1	2	3	4	5	6	7	8	9
		Rs. A. P.					Rs. A. P.	
103	Ambari mauza, pargana Chakley Kazirbat.	2,618 7 8	Whole	16 annas ..	Shah Badardidaja Abul Khayer and others.	..	204 9 10	..

This estate is being advertised for sale for instalments of revenue which were due on or before the 30th Jaistha 1338 B. S. of which the latest date of payment was the 28th June 1931.

Rangpur, the 15th August 1931. T. M. Dow, Collector.

Notification A.

NOTICE is hereby given, under section 6, Act XI of 1859, that the undermentioned estate and shares of estate in the district of Rangpur will be put up for sale at the office of the Collector of that district on 26th September 1931, at 11 a.m., for arrears of revenue and other demands which by law are realizable as arrears of land revenue :—

Tauzi No.	Name of mahal and pargana.	Sadar jama of whole estate.	Whether the whole estate is to be sold.	If a share is to be sold, specification of such share or shares.	Names of proprietors of property to be sold.	If only a share is to be sold, the sadar jama of such share.	If the whole estate is to be sold, the arrears due from it.	If only a share is to be sold, the arrears due from it.
1	2	3	4	5	6	7	8	9
		Rs. A. P.					Rs. A. P.	
51	Suradhan O'gayraha mauza, pargana Chakley Kazirhat.	2,581 5 7	Whole	16 annas ..	Raja Gopal Lal Roy Bahadur.	..	269 14 1	..

This estate is being advertised for sale for instalments of revenue which were due on or before the 30th Jaistha 1338 B. S. of which the latest date of payment was the 28th June 1931.

Rangpur, the 15th August 1931. T. M. Dow, Collector.

Notification A.

NOTICE is hereby given under section 6, Act XI of 1859, that the undermentioned estate and shares of estate in the district of Rangpur will be put up for sale at the office of the Collector of that district on 26th September 1931, at 11 a.m., for arrears of revenue and other demands which by law are realizable as arrears of land revenue :—

Tauzi No.	Name of mahal and pargana.	Sadar jama of whole estate.	Whether the whole estate is to be sold.	If a share is to be sold, specification of such share or shares.	Names of proprietors of property to be sold.	If only a share is to be sold, the sadar jama of such share.	If the whole estate is to be sold, the arrears due from it.	If only a share is to be sold, the arrears due from it.
1	2	3	4	5	6	7	8	9
		Rs. A. P.					Rs. A. P.	
93	Bichandal O'gayraha mauza, pargana Chakley Kazirhat.	1,442 15 10	Whole	16 annas ..	Jotindra Mohan Roy Choudhuri and others.	..	24 13 5	..

This estate is being advertised for sale for instalments of revenue which were due on or before the 30th Jaistha 1338 B. S. of which the latest date of payment was the 28th June 1931.

Rangpur, the 15th August 1931. T. M. Dow, Collector.

Notification A.

NOTICE is hereby given, under section 6, Act XI of 1859, that the undermentioned estate and shares of estate in the district of Rangpur will be put up for sale at the office of the Collector of that district on 26th September 1931, at 11 a. m., for arrears of revenue and other demands which by law are realizable as arrears of land revenue :—

Tauzi No.	Name of mahal and pargana.	Sadar jama of whole estate.	Whether the whole estate is to be sold.	If a share is to be sold, specification of such share or shares.	Names of proprietors of property to be sold.	If only a share is to be sold, the sadar jama of such share.	If the whole estate is to be sold, the arrears due from it.	If only a share is to be sold, the arrears due from it.
1	2	3	4	5	6	7	8	9
		Rs. A. P.					Rs. A. P.	
95	Daud mauza, pargana Chakley Kazirhat.	603 4 1	Whole	16 annas ..	Nripendra Narayan Rudra.	..	63 8 5	..

This estate is being advertised for sale for instalments of revenue which were due on or before the 30th Jaistha 1338 B. S. of which the latest date of payment was the 28th June 1931.

Rangpur, the 15th August 1931. T. M. Dow, Collector.

Notification A.

NOTICE is hereby given, under section 6, Act XI of 1859, that the undermentioned estate and shares of estate in the district of Rangpur will be put up for sale at the office of the Collector of that district on 26th September 1931, at 11 a.m., for arrears of revenue and other demands which by law are realizable as arrears of land revenue :—

Tauzi No	Name of mahal and pargana	Sadar jama of whole estate	Whether the whole estate is to be sold	If a share is to be sold, specification of such share or shares.	Names of proprietors of property to be sold	If only a share is to be sold, the sadar jama of such share	If the whole estate is to be sold, the arrears due from it.	If only a share is to be sold, the arrears due from it
1	2	3	4	5	6	7	8	9
		Rs. A. P.					Rs. A. P.	
166	Chandanpat O'gayraha mauza, pargana Kundi	2,869 8 7	Yes	16 annas	Brindaban Chandra Roy Choudhury	..	294 0 8	..

This estate is being advertised for sale for instalments of revenue which were due on or before the 30th Jaistha, 1338 B. S., of which the latest date of payment was the 28th June 1931

Rangpur, the 15th August 1931 T M. Dow, Collector.

Notification A.

NOTICE is hereby given, under section 6, Act XI of 1859, that the undermentioned estate and shares of estate in the district of Rangpur will be put up for sale at the office of the Collector of that district on 26th September 1931, at 11 a.m., for arrears of revenue and other demands which by law are realizable as arrears of land revenue :—

Tauzi No.	Name of mahal and pargana	Sadar jama of whole estate	Whether the whole estate is to be sold	If a share is to be sold, specification of such share or shares	Names of proprietors of property to be sold	If only a share is to be sold, the sadar jama of such share	If the whole estate is to be sold, the arrears due from it	If only a share is to be sold, the arrears due from it
1	2	3	4	5	6	7	8	9
		Rs A. P					Rs A P	
243	Mithipur O'gayraha mauza, pargana Barabila	4,407 0 0	Yes .	16 annas ..	Jatindra Mohan Roy Choudhury and others	..	50 1 7	..

This estate is being advertised for sale for instalments of revenue which were due on or before the 30th Jaistha, 1338 B. S., of which the latest date of payment was the 28th June 1931.

Rangpur, the 15th August 1931. T. M. Dow, Collector.

Notification A.

NOTICE is hereby given, under sections 6 and 13, Act XI of 1859, that the undermentioned estate and shares of estate in the district of Rangpur will be put up for sale at the office of the Collector of that district on 26th September 1931, at 11 a. m , for arrears of revenue and other demands which by law are realizable as arrears of land revenue.

When in columns 5, 7 and 9 of the following statement it is stated that only a share is to be sold, it is to be understood that a separate account is kept for that share :—

Tauzi No	Name of mahal and pargana	Sadar jama of whole estate	Whether the whole estate is to be sold.	If only a share is to be sold, specification of such share or shares	Names of proprietors of property to be sold.	If only a share is to be sold, the sadar jama of such share.	If the whole estate is to be sold, the arrears due from it.	If only a share is to be sold, the arrears due from it
1	2	3	4	5	6	7	8	9
		Rs. A P.				Rs A. P.		Rs. A. P.
36 Residuary	Kanial khata O'gayraha, pargana Chakloy Kazirhat.	2,830 14 1	No ..	8 annas share of mauza Nohali kismat in Group "A" 10 annas 8 pies share of mauza Darwaninagor in Group "B" 8 annas share of Hansharaj and other mauzas in Group "E." All other shares besides that specified will be excluded from the sale.	Keshab Chandra Ghosh and others.	1,318 3 0	..	137 4 8

This estate is being advertised for sale for instalments of revenue which were due on or before the 30th Jaistha, 1338 B. S., of which the latest date of payment was the 28th June 1931

Rangpur, the 15th August 1931. T. M. Dow, Collector.

Notification A.

NOTICE is hereby given, under sections 6 and 13, Act XI of 1859, that the undermentioned estate and shares of estate in the district of Rangpur will be put up for sale at the office of the Collector of that district on 26th September 1931, at 11 a. m., for arrears of revenue and other demands which by law are realizable as arrears of land revenue.

When in columns 5, 7 and 9 of the followin statement it is stated that only a share is to be sold, it is to be understood that a separate account is kept for that share :—

Tauzi No.	Name of mahal and pargana.	Sadar jama of whole estate.	Whether the whole estate is to be sold.	If a share is to be sold, specification of such share or shares.	Names of proprietors of property to be sold.	If only a share is to be sold, the sadar jama of such share.	If the whole estate is to be sold, the arrears due from it.	If only a share is to be sold, the arrears due from it.
1	2	3	4	5	6	7	8	9
		Rs. A. P.				Rs. A. P.		Rs. A. P.
147 Residuary.	Sakhati O'gayraha, pargana Tepa.	2,163 0 1	No ..	10 annas and 8 pies share of the entire mahal. All other shares besides that specified will be excluded from sale.	Jatindra Mohan Roy Choudhuri and others.	1,442 0 1	..	37 7 11

This estate is being advertised for sale for instalments of revenue which were due on or before the 30th Jaistha, 1338 B. S., of which the latest date of payment was the 28th June 1931.

Rangpur, the 15th August 1931. T. M. Dow, Collector.

Notification A.

NOTICE is hereby given, under section 6, Act XI of 1859, that the undermentioned estate and shares of estate in the district of Rangpur will be put up for sale at the office of the Collector of that district on 26th September 1931, at 11 a.m., for arrears of revenue and other demands which by law are realizable as arrears of land revenue :—

Tauzi No.	Name of mahal and pargana.	Sadar jama of the whole estate.	Whether the whole estate is to be sold.	If a share is to be sold, specification of such share or shares.	Names of proprietors of property to be sold.	If only a share is to be sold, the sadar jama of such share.	If the whole estate is to be sold, the arrears due from it.	If only a share is to be sold, the arrears due from it.
1	2	3	4	5	6	7	8	9
		Rs. A. P.					Rs. A. P.	
64	Jamirbari O'gayraha mauza, pargana Chakley Kazirhat.	1,647 2 8	Whole	16 annas	Brindaban Chandra Roy Choudhury.	..	167 11 8	..

This estate is being advertised for sale for instalments of revenue which were due on or before the 30th Jaistha, 1338 B. S., of which the latest date of payment was the 28th June 1931.

Rangpur, the 15th August 1931. T. M. Dow, Collector.

Notification A.

NOTICE is hereby given, under section 6, Act XI of 1859, that the undermentioned estate and shares of estate in the district of Rangpur will be put up for sale at the office of the Collector of that district on 26th September 1931, at 11 a. m., for arrears of revenue and other demands which by law are realizable as arrears of land revenue :—

Tauzi No.	Name of mahal and pargana.	Sadar jama of whole estate.	Whether the whole estate is to be sold.	If a share is to be sold, specification of such share or shares.	Names of proprietors of property to be sold.	If only a share is to be sold, the sadar jama of such share.	If the whole estate is to be sold, the arrears due from it.	If only a share is to be sold, the arrears due from it.
1	2	3	4	5	6	7	8	9
		Rs. A. P.					Rs. A. P.	
80	Gopal Lal, pargana Chakley Kazirhat.	6,716 3 0	Whole	16 annas	Raja Gopal Lal Roy Bahadur.	..	388 13 5	..

This estate is being advertised for sale for instalments of revenue which were due on or before the 30th Jaistha 1338 B. S., of which the latest date of payment was the 28th June 1931.

Rangpur, the 15th August 1931. T. M. Dow, Collector.

Notification A.

NOTICE is hereby given, under section 6, Act XI of 1859, that the undermentioned estate and shares of estate in the district of Rangpur will be put up for sale at the office of the Collector of that district on the 26th September 1931, at 11 a.m., for arrears of revenue and other demands which by law are realizable as arrears of land revenue :—

Tauzi No.	Name of mahal and pargana.	Sadar jama of whole estate.	Whether the whole estate is to be sold.	If a share is to be sold, specification of such share or shares.	Names of proprietors of property to be sold.	If only a share is to be sold, the sadar jama of such share.	If the whole estate is to be sold, the arrears due from it.	If only a share is to be sold, the arrears due from it.
1	2	3	4	5	6	7	8	9
		Rs. A. P.					Rs. A. P.	
48	Jay-Chandi O'gayraha mauza, pargana Chakley Kazirhat.	1,544 10 5	Whole ..	16 annas ..	Ramani Mohan Choudhury.	..	160 1 10	..

This estate is being advertised for sale for instalments of revenue which were due on or before the 30th Jaistha, 1338 B. S., of which the latest date of payment was the 28th June 1931.

Rangpur, the 15th August 1931. T. M. Dow, Collector.

Notification A.

NOTICE is hereby given, under section 6, Act XI of 1859, that the undermentioned estate and shares of estate in the district of Rangpur will be put up for sale at the office of the Collector of that district on 26th September 1931, at 11 a.m., for arrears of revenue and other demands which by law are realizable as arrears of land revenue :—

Tauzi No.	Name of mahal and pargana.	Sadar jama of whole estate.	Whether the whole estate is to be sold.	If a share is to be sold, specification of such share or shares.	Names of proprietors of property to be sold.	If only a share is to be sold, the sadar jama of such share.	If the whole estate is to be sold, the arrears due from it.	If only a share is to be sold, the arrears due from it.
1	2	3	4	5	6	7	8	9
		Rs. A. P.					Rs. A. P.	
101	Latif Chapra, pargana Chakley Kazirhat.	971 6 2	Whole ..	16 annas ..	Raja Gopal Lal Roy Bahadur.	..	89 0 4	..

This estate is being advertised for sale for instalments of revenue which were due on or before the 30th Jaistha, 1338 B. S., of which the latest date of payment was the 28th June 1931.

Rangpur, the 15th August 1931. T. M. Dow, Collector.

Notification A.

NOTICE is hereby given, under section 6, Act XI of 1859, that the undermentioned estate and shares of estate in the district of Rangpur will be put up for sale at the office of the Collector of that district on 26th September 1931, at 11 a. m., for arrears of revenue and other demands which by law are realizable as arrears of land revenue :—

Tauzi No.	Name of mahal and pargana.	Sadar jama of whole estate.	Whether the whole estate is to be sold.	If share is to be sold, specification of such share or shares.	Names of proprietors of property to be sold.	If only a share is to be sold, the sadar jama of such share.	If the whole estate is to be sold, the arrears dur from it.	If only a share is to be sold, the arrears due from it.
1	2	3	4	5	6	7	8	9
		Rs. A. P.					Rs. A. P.	
109	Kadikol O'gayraha Motalok Lat Cherenga, hisya 6 as. 4 gds. 1 kr. 7 dt., pargana Chakley Kazirhat.	607 1 11	Whole	16 anna ..	Rakhal Chandra Choudhury.	..	59 7 8	..

This estate is being advertised for sale for instalments of revenue which were due on or before the 30th Jaistha, 1338 B. S., of which the latest date of payment was the 28th June 1931.

Rangpur, the 15th August 1931. T. M. Dow, Collector.

Notification A.

NOTICE is hereby given, under section 6, Act XI of 1859, that the undermentioned estate and shares of estate in the district of Rangpur will be put up for sale at the office of the Collector of that district on 26th September 1931, at 11 a.m., for arrears of revenue and other demands which by law are realizable as arrears of land revenue :—

Tauzi No.	Name of mahal and pargana.	Sadar jama of whole estate.	Whether the whole estate is to be sold.	If a share is to be sold, specification of such share or shares.	Names of proprietors of property to be sold.	If only a share is to be sold, the sadar jama of such share.	If the whole estate is to be sold, the arrears due from it.	If only a share is to be sold, the arrears due from it.
1	2	3	4	5	6	7	8	9
		Rs. A. P.					Rs. A. P.	
125	Mahal Harinchara, hisya 8 as. pargana Chakley Kazirhat.	852 5 0	Whole	16 annas ..	Raja Gopal Lal Roy Bahadur.	..	86 0 9	..

This estate is being advertised for sale for instalments of revenue which were due on or before the 30th Jaistha, 1338 B. S., of which the latest date of payment was the 28th June 1931.

Rangpur, the 15th August 1931. T. M. Dow, Collector.

Notification A.

NOTICE is hereby given, under section 6, Act XI of 1859, that the undermentioned estate and shares of estate in the district of Rangpur will be put up for sale at the office of the Collector of that district on 26th September 1931, at 11 a. m., for arrears of revenue and other demands which by law are realizable as arrears of land revenue :—

Tauzi No.	Name of mahal and pargana.	Sadar jama of whole estate.	Whether the whole estate is to be sold.	If a share is to be sold, specification of such share or shares.	Names of proprietors of property to be sold.	If only a share is to be sold, the sadar jama of such share.	If the whole estate is to be sold, the arrears due from it.	If only a share is to be sold, the arrears due from it.
1	2	3	4	5	6	7	8	9
		Rs. A. P.					Rs. A. P.	
133	Baragacha O'gayraha mauza, pargana Chakley Kazirhat.	938 15 4	Whole ..	16 annas ..	Raja Gopal Lal Roy Bahadur.	..	94 10 5	..

This estate is being advertised for sale for instalments of revenue which were due on or before the 30th Jaistha, 1338 B. S., of which the latest date of payment was the 28th June 1931.

Rangpur, the 15th August 1931. T. M. Dow, Collector.

Notification A.

NOTICE is hereby given, under section 6, Act XI of 1859, that the undermentioned estate and shares of estate in the district of Rangpur will be put up for sale at the office of the Collector of that district on 26th September 1931, at 11 a.m., for arrears of revenue and other demands which by law are realisable as arrears of land revenue :—

Tauzi No.	Name of mahal and pargana.	Sadar jama of whole estate.	Whether the whole estate is to be sold.	If a share is to be sold, specification of such share or shares.	Names of proprietors of property to be sold.	If only a share is to be sold, the sadar jama of such share.	If the whole estate is to be sold, the arrears due from it.	If only a share is to be sold, the arrears due from it.
1	2	3	4	5	6	7	8	9
		Rs. A. P.					Rs. A. P.	
137	Ramnagore mauza, pargana Chakley Kazirhat.	1,341 15 1	Whole ..	16 annas ..	Raja Gopal Lal Roy Bahadur.	..	138 9 10	..

This estate is being advertised for sale for instalments of revenue which were due on or before the 30th Jaistha, 1338 B. S., of which the latest date of payment was the 28th June 1931.

Rangpur, the 15th August 1931. T. M. Dow, Collector.

Notification A.

NOTICE is hereby given, under section 6, Act XI of 1859, that the undermentioned estate and shares of estate in the district of Rangpur will be put up for sale at the office of the Collector of that district on 26th September 1931, at 11 a. m., for arrears of revenue and other demands which by law are realisable as arrears of land revenue :—

Tauzi No.	Name of mahal and pargana.	Sadar jama of whole estate.	Whether the whole estate is to be sold.	If a share is to be sold, specification of such share or shares.	Names of proprietors of property to be sold.	If only a share is to be sold, the sadar jama of such share.	If the whole estate is to be sold, the arrears due from it.	If only a share is to be sold, the arrears due from it.
1	2	3	4	5	6	7	8	9
		Rs. A. P.					Rs. A. P.	
156	Udashi, hisya 8 annas.	2,475 10 5	Whole ..	16 annas share ..	Raja Gopal Lal Roy Bahadur.	..	257 5 10	..

This estate is being advertised for sale for instalments of revenue which were due on or before the 30th Jaistha, 1338 B. S., of which the latest date of payment was the 28th June 1931.

Rangpur, the 15th August 1931. T. M. Dow, Collector.

Notification A.

NOTICE is hereby given, under section 6, Act XI of 1859, that the undermentioned estate and shares of estate in the district of Rangpur will be put up for sale at the office of the Collector of that district on 26th September 1931, at 11 a. m., for arrears of revenue and other demands which by law are realisable as arrears of land revenue :—

Tauzi No.	Name of mahal and pargana.	Sadar jama of whole estate.	Whether the whole estate is to be sold.	If a share is to be sold, specification of such share or shares.	Names of proprietors of property to be sold.	If only a share is to be sold, the sadar jama of such share.	If the whole estate is to be sold, the arrears due from it.	If only a share is to be sold, the arrears due from it.
1	2	3	4	5	6	7	8	9
		Rs. A. P.					Rs. A. P.	
164	Kundi, hisya 1 anna and 5 gandas, pargana Kundi.	3,106 14 0	Yes ..	16 annas ..	Khitish Chandra Acharjee Choudhury.	..	331 9 2	..

This estate is being advertised for sale for instalments of revenue which were due on or before the 30th Jaistha, 1338 B. S., of which the latest date of payment was the 28th June 1931.

Rangpur, the 15th August 1931. T. M. Dow, Collector.

Notification A.

NOTICE is hereby given, under section 6, Act XI of 1859, that the undermentioned estate and shares of estate in the district of Rangpur will be put up for sale at the office of the Collector of that district on 26th September 1931, at 11 a. m., for arrears of revenue and other demands which by law are realisable as arrears of land revenue :—

Tauzi No.	Name of mahal and pargana.	Sadar jama of whole estate.	Whether the whole estate is to be sold.	If a share is to be sold, specification of such share or shares.	Names of proprietors of property to be sold.	If only a share is to be sold, the sadar jama of such share	If the whole estate is to be sold, the arrears due from it.	If only a share is to be sold, the arrears due from it.
1	2	3	4	5	6	7	8	9
		Rs. A. P.					Rs. A. P.	
176	Maymantapur, hisya 8 annas, pargana Maymantapur.	1,048 8 10	Yes ..	16 annas ..	Raja Gopal Lal Roy Bahadur.	....	33 10 7	....

This estate is being advertised for sale for instalments of revenue which were due on or before the 30th Jaistha, 1338 B. S., of which the latest date of payment was the 28th June 1931.

Rangpur, the 15th August 1931. T. M. Dow, Collector.

Notification A.

NOTICE is hereby given, under section 6, Act XI of 1859, that the undermentioned estate and shares of estate in the district of Rangpur will be put up for sale at the office of the Collector of that district on 26th September 1931, at 11 a. m., for arrears of revenue and other demands which by law are realizable as arrears of land revenue :—

Tauzi No.	Name of mahal and pargana.	Sadar jama of whole estate.	Whether the whole estate is to be sold.	If a share is to be sold, specification of such share or shares.	Names of proprietors of property to be sold.	If only a share is to be sold, the sadar jama of such share.	If the whole estate is to be sold, the arrears due from it.	If only a share is to be sold, the arrears due from it.
1	2	3	4	5	6	7	8	9
		Rs. A. P.					Rs. A. P.	
211	Durgapur O'gayraha mauza, pargana Fatejangpur	1,223 7 5	Yes ..	16 annas ..	Maulvi Syed Fazley Rahim.	....	85 4 8	....

This estate is being advertised for sale for instalments of revenue which were due on or before the 30th Jaistha, 1338 B.S., of which the latest date of payment was the 28th June 1931.

Rangpur, the 15th August 1931. T. M. Dow, Collector.

Notification A.

NOTICE is hereby given, under section 6, Act XI of 1859, that the undermentioned estate and shares of estate in the district of Rangpur will be put up for sale at the office of the Collector of that district on 26th September 1931, at 11 a.m., for arrears of revenue and other demands which by law are realizable as arrears of land revenue :—

Tauzi No.	Name of mahal and pargana.	Sadar jama of whole estate.	Whether the whole estate is to be sold.	If a share is to be sold, specification of such share or shares	Names of proprietors of property to be sold.	If only a share is to be sold, the sadar jama of such share.	If the whole estate is to be sold, the arrears due from it.	If only a share is to be sold, the arrears due from it
1	2	3	4	5	6	7	8	9
		Rs. A. P.					Rs. A. P.	
229	Ambari O'gayraha, pargana Peri	806 14 6	Yes ..	16 annas ..	Raja Gopal Lal Roy Bahadur.	..	46 7 0	..

This estate is being advertised for sale for instalments of revenue which were due on or before the 30th Jaistha, 1338 B.S., of which the latest date of payment was the 28th June 1931.

Rangpur, the 15th August 1931. T. M. Dow, Collector.

Notification A.

NOTICE is hereby given, under section 6, Act XI of 1859, that the undermentioned estate and shares of estate in the district of Rangpur will be put up for sale at the office of the Collector of that district on 26th September 1931, at 11 a. m., for arrears of revenue and other demands which by law are realizable as arrears of land revenue :—

Tauzi No.	Name of mahal and pargana	Sadar jama of whole estate.	Whether the whole estate is to be sold.	If a share is to be sold, specification of such share or shares.	Names of proprietors of property to be sold.	If only a share is to be sold, the sadar jama of such share.	If the whole estate is to be sold, the arrears due from it.	If only a share is to be sold, the arrears due from it.
1	2	3	4	5	6	7	8	9
		Rs. A. P.					Rs. A. P.	
247	Putimari O'gayraha mauza, pargana Andua.	3,270 12 4	Yes ..	16 annas ..	Raja Gopal Lal Roy Bahadur.	..	203 2 1	..

This estate is being advertised for sale for instalments of revenue which were due on or before the 30th Jaistha, 1338 B.S., of which the latest date of payment was the 28th June 1931.

Rangpur, the 15th August 1931. T. M. Dow, Collector.

Notification A.

NOTICE is hereby given, under section 6, Act XI of 1859, that the undermentioned estate and shares of estate in the district of Rangpur will be put up for sale at the office of the Collector of that district on 26th September 1931, at 11 a.m., for arrears of revenue and other demands which by law are realizable as arrears of land revenue :—

Tauzi No.	Name of mahal and pargana.	Sadar jama of whole estate.	Whether the whole estate is to be sold	If a share is to be sold, specification of such share or shares.	Names of proprietors of property to be sold.	If only a share is to be sold, the sadar jama of such share.	If the whole estate is to be sold, the arrears due from it.	If only a share is to be sold, the arrears due from it.
1	2	3	4	5	6	7	8	9
		Rs. A. P.					Rs. A. P.	
526	Khor'a Moradpur O'gayra'a, hisya 8 annas, pargana Payra'and.	2,532 15 6	Yes ..	16 annas ..	Raja Gopal Lal Roy Bahadur.	..	260 15 11	..

This estate is being advertised for sale for instalments of revenue which were due on or before the 30th Jaistha, 1338 B.S., of which the latest date of payment was the 28th June 1931.

Rangpur, the 15th August 1931. T. M. Dow, Collector.

Notification A.

NOTICE is hereby given, under section 6, Act XI of 1859, that the undermentioned estate and shares of estate in the district of Rangpur will be put up for sale at the office of the Collector of that district on 26th September 1931, at 11 a. m., for arrears of revenue and other demands which by law are realizable as arrears of land revenue :—

Tauzi No.	Name of mahal and pargana.	Sadar jama of whole estate.	Whether the whole estate is to be sold.	If a share is to be sold, specification of such share or shares.	Names of proprietors of property to be sold.	If only a share is to be sold, the sadar jama of such share.	If the whole estate is to be sold, the arrears due from it.	If only a share is to be sold, the arrears due from it.
1	2	3	4	5	6	7	8	9
		Rs. A. P.					Rs. A. P.	
527	Hamidpur O'gayraha mauza, Motalak Jote-Gokul, hisya 8 annas.	1,532 4 6	Yes ..	16 annas ..	Raja Gopal Lal Roy Bahadur.	..	158 11 5	..

This estate is being advertised for sale for instalments of revenue which were due on or before the 30th Jaistha, 1338 B.S., of which the latest date of payment was the 28th June 1931.

Rangpur, the 15th August 1931. T. M. Dow, Collector.

Notification A.

NOTICE is hereby given, under section 6, Act XI of 1859, that the undermentioned estate and shares of estate in the district of Rangpur will be put up for sale at the office of the Collector of that district on 26th September 1931, at 11 a. m., for arrears of revenue and other demands which by law are realizable as arrears of land revenue :—

Tauzi No.	Name of mahal and pargana.	Sadar jama of whole estate.	Whether the whole estate is to be sold.	If a share is to be sold, specification of such share or shares.	Names of proprietors of property to be sold.	If only a share is to be sold, the sadar jama of such share.	If the whole estate is to be sold, the arrears due from it.	If only a share is to be sold, the arrears due from it.
1	2	3	4	5	6	7	8	9
		Rs. A. P.					Rs. A. P.	
648	Osmanpur O'gayraha mauza, hisya 3 as. 8 p., pargana Barabila.	2,024 5 6	Yes ..	16 annas ..	Kalipada Chakravarty.	....	184 5 5	....

This estate is being advertised for sale for instalments of revenue which were due on or before the 30th Jaistha, 1338 B.S., of which the latest date of payment was the 28th June 1931.

Rangpur, the 15th August 1931. T. M. Dow, Collector.

Notification A.

NOTICE is hereby given, under section 6, Act XI of 1859, that the undermentioned estate and shares of estate in the district of Rangpur will be put up for sale at the office of the Collector of that district on 26th September 1931, at 11 a.m., for arrears of revenue and other demands which by law are realizable as arrears of land revenue :—

Tauzi No.	Name of mahal and pargana.	Sadar jama of whole estate.	Whether the whole estate is to be sold.	If a share is to be sold, specification of such share or shares.	Names of proprietors of property to be sold.	If only a share is to be sold, the sadar jama of such share.	If the whole estate is to be sold, the arrears due from it.	If only a share is to be sold, the arrears due from it
1	2	3	4	5	6	7	8	9
		Rs. A. P.					Rs. A. P.	
720	Lalbari Kismat, hisya 4 as. 10 gds., pargana Lalbari.	1,135 14 6	Yes ..	16 annas ..	Majaharuddin and others.	....	9 8 7	....

This estate is being advertised for sale for instalments of revenue which were due on or before the 30th Jaistha, 1338 B.S., of which the latest date of payment was the 28th June 1931.

Rangpur, the 15th August 1931. T. M. Dow, Collector.

Notification A.

NOTICE is hereby given, under section 6, Act XI of 1859, that the undermentioned estate and shares of estate in the district of Rangpur will be put up for sale at the office of the Collector of that district on 26th September 1931, at 11 a. m., for arrears of revenue and other demands which by law are realizable as arrears of land revenue :—

Tauzi No.	Name of mahal and pargana.	Sadar jama of whole estate.	Whether the whole estate is to be sold.	If a share is to be sold, specification of such share or shares.	Names of proprietors of property to be sold.	If only a share is to be sold, the sadar jama of such share.	If the whole estate is to be sold, the arrears due from it.	If only a share is to be sold, the arrears due from it.
1	2	3	4	5	6	7	8	9
		Rs. A. P.					Rs. A P.	
801	Jagannathkhan, pargana Chakley Kazirhat.	1,588 6 4	Yes ..	16 annas ..	Sourindra Nath Khan and others.	....	41 4 7	....

This estate is being advertised for sale for instalments of revenue which were due on or before the 30th Jaistha, 1338 B.S., of which the latest date of payment was the 28th June 1931.

Rangpur, the 15th August 1931. T. M. Dow, Collector.

Notification A.

NOTICE is hereby given, under sections 6 and 13, Act XI of 1859, that the undermentioned estate and shares of estate in the district of Rangpur will be put up for sale at the office of the Collector of that district on 26th September 1931, at 11 a. m., for arrears of revenue and other demands which by law are realizable as arrears of land revenue.

When in columns 5, 7 and 9 of the following statement it is stated that only a share is to be sold, it is to be understood that a separate account is kept for that share :—

Tauzi No.	Name of mahal and pargana.	Sadar jama of whole estate.	Whether the whole estate is to be sold.	If a share is to be sold, specification of such share or shares.	Names of proprietors of property to be sold.	If only a share is to be sold, the sadar jama of such share.	If the whole estate is to be sold, the arrears due from it.	If only a share is to be sold, the arrears due from it.
1	2	3	4	5	6	7	8	9
		Rs. A. P.				Rs. A. P.		Rs. A. P.
36-6	Kanial Khata O'gayraha mauza, pargana Chakley Kazirhat.	2,830 14 1	No ..	8 annas share of mauza Nohali kismat in group "A". 5 annas and 4 pies share of mauza Darwanibagor in group "B". 8 annas share of Hangsharaj and other mauzas in group "E". All other shares besides that specified will be excluded from the sale.	Keshab Chandra Ghosh and another.	1,274 3 9	..	132 11 4

This estate is being advertised for sale for instalments of revenue which were due on or before the 30th Jaistha, 1338 B.S., of which the latest date of payment was the 28th June 1931.

Rangpur, the 15th August 1931. T. M. Dow, Collector.

Notification A.

NOTICE is hereby given, under section 6, Act XI of 1859, that the undermentioned estate and shares of estate in the district of Rangpur will be put up for sale at the office of the Collector of that district on 26th September 1931, at 11 a. m., for arrears of revenue and other demands which by law are realizable as arrears of land revenue :—

Tauzi No.	Name of mahal and pargana.	Sadar jama of whole estate.	Whether the whole estate is to be sold.	If a share is to be sold, specification of such share or shares.	Names of proprietors of property to be sold.	If only a share is to be sold, the sadar jama of such share.	If the whole estate is to be sold, the arrears due from it.	If only a share is to be sold, the arrears due from it.
1	2	3	4	5	6	7	8	9
		Rs. A. P.					Rs. A. P.	
207	Arsadpur, pargana Arsadpur.	619 11 7	Yes ..	16 annas ..	Raja Gopal Lal Roy Bahadur and others.	..	313 14 4	..

This estate is being advertised for sale for instalments of revenue which were due on or before the 30th Jaistha, 1338 B. S., of which the latest date of payment was the 28th June 1931.

Rangpur, the 15th August 1931. T. M. Dow, Collector.

Notification A.

NOTICE is hereby given, under sections 6 and 13, Act XI of 1859, that the undermentioned estate and shares of estate in the district of Rangpur will be put up for sale at the office of the Collector of that district on 26th September 1931, at 11 a.m., for arrears of revenue and other demands which by law are realizable as arrears of land revenue.

When in columns 5, 7 and 9 of the following statement it is stated that only a share is to be sold, it is to be understood that a separate account is kept for the share :—

Tauzi No.	Name of mahal and pargana.	Sadar jama of whole estate.	Whether the whole estate is to be sold.	If a share is to be sold, specification of such share or shares.	Names of proprietors of property to be sold.	If only a share is to be sold, the sadar jama of such share.	If the whole estate is to be sold, the arrears due from it.	If only a share is to be sold, the arrears due from it.
1	2	3	4	5	6	7	8	9
		Rs. A. P.				Rs. A. P.		Rs. A. P.
30 Residuary.	Salhati O'gayraha, pargana Chakley Kazirhat.	2,522 13 0	No ..	14 annas share of the entire mahal.	Syed Fazley Rahim and others.	2,207 7 4	..	231 10 6

This estate is being advertised for sale for instalments of revenue which were due on or before the 30th Jaistha, 1338 B. S., of which the latest date of payment was the 28th June 1931.

Rangpur, the 15th August 1931. T. M. Dow, Collector.

Notification A.

NOTICE is hereby given, under sections 6 and 13, Act XI of 1859, that the undermentioned estate and shares of estate in the district of Rangpur will be put up for sale at the office of the Collector of that district on 26th September 1931, at 11 a. m., for arrears of revenue and other demands which by law are realizable as arrears of land revenue.

When in columns 5, 7 and 9 of the following statement it is stated that only a share is to be sold, it is to be understood that a separate account is kept for that share :—

Tauzi No.	Name of mahal and pargana.	Sadar jama of whole estate.	Whether the whole estate is to be sold.	If a share is to be sold, specification of such share or shares.	Names of proprietors of property to be sold.	If only a share is to be sold, the sadar jama of such share.	If the whole estate is to be sold, the arrears due from it.	If only a share is to be sold, the arrears due from it.
1	2	3	4	5	6	7	8	9
		Rs. A. P.				Rs. A. P.		Rs. A. P.
47-4	Goregram mauza, pargana Chakley Kazirhat.	4,622 11 5	No ..	1 a. 18 gds. 3 k. 1 kg. 3 til and 6½ bahar share of the entire mahal. All other shares besides that specified will be excluded from the sale.	Bireswar Chatterjee, guardian on behalf of Annada Mohan Das and Sachindra Mohan Das.	560 13 4	..	58 3 5

This estate is being advertised for sale for instalments of revenue which were due on or before the 30th Jaistha, 1338 B.S., of which the latest date of payment was the 28th June 1931.

Rangpur, the 15th August 1931. T. M. Dow Collector.

Notification A.

NOTICE is hereby given, under sections 6 and 13, Act XI of 1859, that the undermentioned estate and shares of estate in the district of Rangpur will be put up for sale at the office of the Collector of that district on 26th September 1931, at 11 a. m., for arrears of revenue and other demands which by law are realizable as arrears of land revenue.

When in columns 5, 7 and 9 of the following statement it is stated that only a share is to be sold, it is to be understood that a separate account is kept for that share :—

Tauzi No.	Name of mahal and pargana.	Sadar jama of whole estate.	Whether the whole estate is to be sold.	If a share is to be sold, specification of such share or shares.	Names of proprietors of property to be sold.	If only a share is to be sold, the sadar jama of such share.	If the whole estate is to be sold, the arrears due from it.	If only a share is to be sold, the arrears due from it.
1	2	3	4	5	6	7	8	9
		Rs. A. P.				Rs. A. P.		Rs. A. P.
73-5	Haroa O'gayraha mauza, hisya 7 annas, pargana Chakley Kazirhat, Katepur Kundi.	3,929 13 3	No ..	16 annas share of Hariramput and other mauzas in group "A". All other shares besides that specified will be excluded from the sale.	Ramani Mohan Choudhury.	2,580 3 3	..	270 2 9

This estate is being advertised for sale for instalments of revenue which were due on or before the 30th Jaistha 1338 B.S., of which the latest date of payment was the 28th June 1931.

Rangpur, the 15th August 1931. T. M. Dow, Collector.

Notification A.

NOTICE is hereby given, under sections 6 and 13, Act XI of 1859, that the undermentioned estate and shares of estate in the district of Rangpur will be put up for sale at the office of the Collector of that district on 26th September 1931, at 11 a.m., for arrears of revenue and other demands which by law are realizable as arrears of land revenue.

When in columns 5, 7 and 9 of the following statement it is stated that only a share is to be sold, it is to be understood that a separate account is kept for that share :—

Tauzi No.	Name of mahal and pargana.	Sadar jama of whole estate.	Whether the whole estate is to be sold.	If a share is to be sold, specification of such share or shares.	Names of proprietors of property to be sold.	If only a share is to be sold, the sadar jama of such share.	If the whole estate is to be sold, the arrears due from it.	If only a share is to be sold, the arrears due from it.
1	2	3	4	5	6	7	8	9
		Rs. A. P.				Rs. A. P.		Rs. A. P.
120 Residuary,	Kuchiamore O'gayraha mauza, pargana Chakley Kazirhat.	1,003 12 3	No ..	16 annas share of six anna Bahalipara kismat in group "A". 9 as. 5 gds. 1 k. 1 kg. 12 til share of mauza Kuchiamore in group "B". All other shares besides that specified will be excluded from the sale.	Kumud Kumar Lahiri and others.	656 12 2	..	64 14 10

This estate is being advertised for sale for instalments of revenue which were due on or before the 30th Jaistha, 1338 B.S., of which the latest date of payment was the 28th June 1931.

Rangpur, the 15th August 1931. T. M. Dow, Collector.

Notification A.

NOTICE is hereby given, under sections 6 and 13, Act XI of 1859, that the undermentioned estate and shares of estate in the district of Rangpur will be put up for sale at the office of the Collector of that district on 26th September 1931, at 11 a. m., for arrears of revenue and other demands which by law are realizable as arrears of land revenue.

When in columns 5, 7 and 9 of the following statement it is stated that only a share is to be sold, it is to be understood that a separate account is kept for that share :—

Tauzi No.	Name of mahal and pargana.	Sadar jama of whole estate.	Whether the whole estate is to be sold.	If a share is to be sold, specification of such share or shares.	Names of proprietors of property to be sold.	If only a share is to be sold, the sadar jama of such share.	If the whole estate is to be sold, the arrears due from it.	If only a share is to be sold, the arrears due from it.
1	2	3	4	5	6	7	8	9
		Rs. A. P.				Rs. A. P.		Rs. A. P.
130 Residuary.	Putimari mauza, hisya 14 as. 5 gds. 3 k. 3 kanti, pargana Chakley Kazirhat.	1,690 2 7	No ..	13 as. 15 gds. 1 k. 1 kr. 2 danti 1 job share of entire mahal. All other shares besides that specified will be excluded from sale.	Maulvi Syed Fazlar Rahim and others.	1,457 12 7	..	152 12 9

This estate is being advertised for sale for instalments of revenue which were due on or before the 30th Jaistha, 1338 B.S., of which the latest date of payment was the 28th June 1931.

Rangpur, the 15th August 1931. T. M. Dow, Collector.

Notification A.

NOTICE is hereby given, under sections 6 and 13, Act XI of 1859, that the undermentioned estate and shares of estate in the district of Rangpur will be put up for sale at the office of the Collector of that district on 26th September 1931, at 11 a. m., for arrears of revenue and other demands which by law are realizable as arrears of land revenue.

When in columns 5, 7 and 9 of the following statement it is stated that only a share is to be sold, it is to be understood that a separate account is kept for that share :—

Tauzi No.	Name of mahal and pargana.	Sadar jama of whole estate.	Whether the whole estate is to be sold.	If a share is to be sold, specification of such share or shares.	Names of proprietors of property to be sold.	If only a share is to be sold, the sadar jama of such share.	If the whole estate is to be sold, the arrears due from it.	If only a share is to be sold, the arrears due from it.
1	2	3	4	5	6	7	8	9
		Rs. A. P.				Rs. A. P.		Rs. A. P.
217 Residuary.	Santipur O'gayraha, pargana Barabila.	608 6 5	No ..	14 annas share of the entire mahal. All other shares besides that specified will be excluded from sale.	Maulvi Fazlar Rahim and others.	532 5 7	..	54 13 1

This estate is being advertised for sale for instalments of revenue which were due on or before the 30th Jaistha, 1338 B.S., of which the latest date of payment was the 28th June 1931.

Rangpur, the 15th August 1931. T. M. Dow, Collector.

Notification A.

NOTICE is hereby given, under sections 6 and 13, Act XI of 1859, that the undermentioned estate and shares of estate in the district of Rangpur will be put up for sale at the office of the Collector of that district on 26th September 1931, at 11 a.m., for arrears of revenue and other demands which by law are realizable as arrears of land revenue.

When in columns 5, 7 and 9 of the following statement it is stated that only a share is to be sold, it is to be understood that a separate account is kept for that share :—

Tauzi No.	Name of mahal and pargana.	Sadar jama of whole estate.	Whether the whole estate is to be sold.	If a share is to be sold, specification of such share or shares.	Names of proprietors of property to be sold.	If only a share is to be sold, the sadar jama of such share.	If the whole estate is to be sold, the arrears due from it.	If only a share is to be sold, the arrears due from it.
1	2	3	4	5	6	7	8	9
		Rs. A. P.				Rs. A. P.		Rs. A. P.
218 Residuary.	Sangalsi mauza, pargana Chakley Kazirhat.	1,027 3 0	No ..	8 annas share of the entire mahal. All other shares besides that specified will be excluded from the sale.	Surath Nath Roy and others.	513 9 0	..	113 14 1

This estate is being advertised for sale for instalments of revenue which were due on or before the 30th Jaistha, 133[illegible] B.S., of which the latest date of payment was the 28th June 1931.

Rangpur, the 15th August 1931, T. M. Dow, Collector.

Notification A.

NOTICE is hereby given, under sections 6 and 13, Act XI of 1859, that the undermentioned estate and shares of estate in the district of Rangpur will be put up for sale at the office of the Collector of that district on 26th September 1931, at 11 a. m., for arrears of revenue and other demands which by law are realizable as arrears of land revenue.

When in columns 5, 7 and 9 of the following statement it is stated that only a share is to be sold, it is to be understood that a separate account is kept for that share :—

Touzi No.	Name of mahal and pargana.	Sadar jama of whole estate.	Whether the whole estate is to be sold.	If a share is to be sold, specification of such share or shares.	Names of proprietors of property to be sold.	If only a share is to be sold, the sadar jama of such share.	If the whole estate is to be sold, the arrears due from it	If only a share is to be sold, the arrears due from it
1	2	3	4	5	6	7	8	9
		Rs. A. P.				Rs. A. P.		Rs. A. P.
318-1	Sangalal maura, pargana Chakley Kazirhat.	1,027 3 0	No ..	8 annas share of the entire mahal. All other shares besides that specified will be excluded from the sale.	Subaslul Ma umdar and others,	513 9 6	..	115 1 8

This estate is being advertised for sale for instalments of revenue which were due on or before the 30th Jaistha, 1338 B. S., of which the latest date of payment was the 28th June 1931

Rangpur, the 15th August 1931. T. M. Dow, Collector.

Notification A.

NOTICE is hereby given, under sections 6 and 13, Act XI of 1859, that the undermentioned estate and shares of estate in the district of Rangpur will be put up for sale at the office of the Collector of that district on 26th September 1931, at 11 a.m., for arrears of revenue and other demands which by law are realizable as arrears of land revenue.

When in columns 5, 7 and 9 of the following statement it is stated that only a estate is to be sold, it is to be understood that a separate account is kept for that share :—

Touzi No.	Name of mahal and pargana.	Sadar jama of whole estate.	Whether the whole estate is to be sold.	If a share is to be sold, specification of such share or shares.	Names of proprietors of property to be sold.	If only a share is to be sold, the sadar jama of such share.	If the whole estate is to be sold, the arrears due from it.	If only a share is to be sold, the arrears due from it.
1	2	3	4	5	6	7	8	9
		Rs. A. P.				Rs. A. P.		Rs. A. P.
668-1	Siksahar, pargana Siksahar.	3,099 10 0	No ..	8½ annas share of Faridpur Mudafat mauza in group "A". 8½ annas share of Kayerpara mauza in group "B". 8½ annas share of Bhagaripara mauza in group "C". 8½ annas share of Harinbari, mauza in group "D". 8½ annas share of Amlagachi mauza in group "E". 8½ annas share of Nandisahar mauza in group "F". 8½ annas share of Gidari mauza in group "G". 8½ annas share of Shyampur mauza in group "H". 8½ annas share of Gopinathpur mauza in group "I". 8½ annas share of Bamankuri mauza in group "J". 8½ annas share of Batkapa mauza in group "K". 8½ annas share of Makdumpur mauza in group "L". All other shares besides that specified will be excluded from the sale.	Mahammad Azim Uddin Mia Pal-wan and others.	1,647 4 5	..	153 0 0

This estate is being advertised for sale for instalments of revenue which were due on or before the 30th Jaistha, 1338 B.S., of which the latest date of payment was the 28th June 1931.

Rangpur, the 15th August 1931. T. M. Dow, Collector.

Notification A.

NOTICE is hereby given, under sections 6 and 13, Act XI of 1859, that the undermentioned estate and shares of estate in the district of Rangpur will be put up for sale at the office of the Collector of that district on 26th September 1931, at 11 a. m., for arrears of revenue and other demands which by law are realizable as arrears of land revenue.

When in columns 5, 7 and 9 of the following statement it is stated that only a share is to be sold, it is to be understood that a separate account is kept for that share :—

Tauzi No.	Name of mahal and pargana.	Sadar jama of whole estate.	Whether the whole estate is to be sold.	If a share is to be sold, specification of such share or shares.	Names of proprietors of property to be sold.	If only a share is to be sold, the sadar jama of such share.	If the whole estate is to be sold, the arrears due from it.	If only a share is to be sold, the arrears due from it.
1	2	3	4	5	6	7	8	9
		Rs. A. P.				Rs. A. P.		Rs. A. P.
692-4	Sherpur, pargana Sherpur.	2,132 12 2	No ..	4 annas 18 gandas share of the entire mahal. All other shares besides that specified will be excluded from the sale.	Kalikoah Chandra Chatterjee.	653 2 6	..	32 0 0

This estate is being advertised for sale for instalments of revenue which were due on or before the 30th Jaistha, 1338 B. S., of which the latest date of payment was the 28th June 1931.

Rangpur, the 15th August 1931. T. M. Dow, Collector.

Notification A.

NOTICE is hereby given, under sections 6 and 13, Act XI of 1859, that the undermentioned estate and shares of estate in the district of Rangpur will be put up for sale at the office of the Collector of that district on 26th September 1931, at 11 a. m., for arrears of revenue and other demands which by law are realizable as arrears of land revenue.

When in columns 5, 7 and 9 of the following statement it is stated that only a share is to be sold, it is to be understood that a separate account is kept for that share :—

Tauzi No.	Name of mahal and pargana.	Sadar jama of whole estate.	Whether the whole estate is to be sold.	If a share is to be sold specification of such share or shares.	Names of proprietors of property to be sold.	If only a share is to be sold, the sadar jama of such share.	If the whole estate is to be sold, the arrears due from it	If only a share is to be sold, the arrears due from it.
1	2	3	4	5	6	7	8	9
		Rs. A. P.				Rs. A. P.		Rs. A. P.
696 residuary.	Lalbari kismat, share 4 annas 10 gandas, pargana Lalbari	1,135 14 6	No ..	14 annas 2 pies share of the entire mahal. All other shares besides that specified will be excluded from the sale.	Haripada Ghatak, sabayet of Narayan Thakur and others.	1,005 12 0	..	32 9 7

This estate is being advertised for sale for instalments of revenue which were due on or before the 30th Jaistha, 1338 B. S., of which the latest date of payment was the 28th June 1931.

Rangpur, the 15th August 1931. T. M. Dow, Collector.

Notification A.

NOTICE is hereby given, under sections 6 and 13, Act XI of 1859, that the undermentioned estates and shares of estates in the district of Murshidabad will be put up for sale at the office of the Collector of that district on the 26th September 1931, at 12-30 p.m., for arrears of revenue and other demands which by law are realizable as arrears of land revenue.

When in columns 5, 7 and 9 of the following statement it is stated that only a share is to be sold, it is to be understood that a separate account is kept for that share :—

Tauzi No	Name of mahal and pargana.	Sadar jama of whole estate.	Whether the whole estate is to be sold	If only a share is to be sold, specification of such share or shares	Names of proprietors of property to be sold	If only a share is to be sold, the sadar jama of such share	If the whole estate is to be sold, the arrears due from it	If only a share is to be sold, the arrears due from it
1	2	3	4	5	6	7	8	9
		Rs. A. P.				Rs A P.	Rs A P	Rs. A P
5/11	Dehi Kutubpur, pargana Serpur.	..	No	Share—2 as 12 gds 1 c. 2 kg 3½ tils All other shares than that specified will be excluded from the sale	Syed Mahammad Maswood and others	1,172 15 0	.	24 14 6
Police	Ditto	..	No .	Police ..	Ditto ..	9 0 0		1 6 9
14	Kulberia Kismat Paragana, pargana Kulberia	631 14 4	Yes .	.	Saradindu Ganguli as receiver, Dangapara estate		28 12 9	
39	Jhikarhati, pargana Sahajadpur	1,142 9 0	Yes ..	.	Sudhir Krishna Bancrjee, sebait of Sree Sree Iswar Radhakanta Jew Thakur.	.	58 0 0	
70/ Ejmali	Gankar Dehi, pargana Gankar.	..	No	Ejmali share—4 as 11 gds. 1 c. 1 kr. All other shares than that specified will be excluded from the sale	Nanda Kumar Baral and others, sebait of Brindaban Behari Deb Thakur	4,196 6 5		177 14 3
Police	Ditto ..	..	No ..	Police ..	Ditto .	75 8 3	.	15 11 8
70/1	Ditto .		No	Share—11 as 8 gds 2 c 2 kr All other shares than that specified will be excluded from the sale	Shyama Charan Nath and another as manager to the estate of Nitya Kali Dasi, sebait of Sri Sri Iswar Brindaban Behari Deb Thakur	10,448 13 0		534 9 3
Police	Ditto ...	..	No	Ditto .	Ditto ..	180 0 7		47 4 1
91	Ganja Raipur, pargana Gowas	618 10 11	Yes .		Saradindu Ganguli as receiver Dangapara estate, and others		43 3 4	
118	Mauza Chamunda, pargana Muraripur	756 5 8	Yes ..		Kalicharan Sinha and others		6 15 6	
165	Taraf Telia Nowapara kismat, pargana Gankar.	2,650 2 11	Yes	..	Ditto ..		55 7 6	
167/ Ejmali	Kismat Paragana Dayanagar, pargana Dayanagar	..	No .	Share—12 annas All other shares than that specified will be excluded from the sale	Chandhuri Mahammad Abdul Huq and others.	7,101 1 6		346 6 4
200/ Ejmali	Mauza Nowda Bahun, pargana Dhawa	.	No	Ejmali share—10 as 13 gds 1 k. 1 kr All other shares than that specified will be excluded from the sale	Birangana Debi, as mother and guardian of Sudhindra Nath Mukharjee, and others	1,179 10 5		112 15 4
211	Taraf Narayanpur Juginda, pargana Hosen Ujlan.	1,260 0 3	Yes .	..	Rakhal Prasad Bagchi and others	.	8 13 1	
284	Dehi Bara Simulia, pargana Gankar	3,575 0 3	Yes .		Doman Prasad Chandra		102 14 2	..
Police	Ditto ..	64 11 4	.		Ditto ..		8 1 4	
327	Kismat Baintali, pargana Baintali	2,561 1 1	Yes		Kalicharan Sinha and others		28 12 9	

Tauzi No.	Name of mahal and pargana.	Sadar jama of whole estate.	Whether the whole estate is to be sold.	If only a share is to be sold, specification of such share or shares.	Names of proprietors of property to be sold.	If only a share is to be sold, the sadar jama of such share.	If the whole estate is to be sold, the arrears due from it.	If only a share is to be sold, the arrears due from it.
1	2	3	4	5	6	7	8	9
		Rs. A. P.				Rs. A. P.	Rs. A. P.	Rs. A. P.
328	Kismat Pargana Baintali, pargana Baintali.	2,816 8 9	Yes ..	..	Kalicharan Sinha and others.	..	32 0 0	..
364	Mauza Masumabad Kismat, pargana Masumabad.	1,236 1 1	Yes .	.	Nitya Kali Dasya ..	..	47 4 0	..
369	Mahammadpur Jamsorpur, pargana Dashazari.	752 4 10	Yes ..	..	Kalicharan Sinha and others.	..	85 5 4	..
387/3	Mahadevnagar Taraf, pargana Rajshahi.	..	No	Share—4 as. 12 gds. 2 kora. All other shares than that specified will be excluded from the sale.	Umapada Singha and others.	539 9 9	..	21 0 0
403	Mauza Rajbati Kismat, pargana Beherole.	2,373 5 5	Yes ..	..	Kamal Krishna Ghose and others, joint manager to the estate of Kumar Dhiraj Ballav Roy, lunatic.	..	1,191 7 7	..
508/ Ejmali.	Dohi Atal, pargana Sorpur.	..	No ..	Share—8 annas .. All other shares than that specified will be excluded from the sale.	Rakshya Krishna Sinha.	1,726 5 0	..	27 11 3
Police	Ditto ..	..	No ..	Ditto ..	Ditto ..	13 3 4	..	1 1 8
2779/ Ejmali.	Taraf Kanaipur, pargana Asadnagar.	..	No ..	Share—8 annas .. All other shares than that specified will be excluded from the sale.	Dharani Kumar Ghose and others.	592 14 6	..	68 4 8
2779/1	Ditto	..	No ..	Share—8 annas, .. All other shares than that specified will be excluded from the sale.	Ditto ..	592 14 7	..	68 4 9
2785	Taraf Hazinagar, pargana Asadnagar.	662 15 3	Yes ..	..	Saradindu Ganguli, as receiver, Dangapara estate.	..	70 6 3	..
3010	Bharwan, pargana Kutabpur.	700 12 10	Yes ..	..	Hari Das Mukherjee and others.	..	66 2 2	..

The abovementioned estates are being advertised for sale for instalments which were due on or before 30th Jaistha, 1338 B. S., of which the last date of payment was in the next Bengali month of Ashar, 1338 B. S.

Berhampore, the 20th August 1931.

S. E. HASSAN, *for* Collector.

Notice.

PURSUANT to the orders of Government, dated the 29th June 1881, particulars of the undernoted articles, held by the Calcutta Port Commissioners as Receivers of Wrecks, each article being of value exceeding Rs. 100, are published for general information in accordance with the provisions of section 276 of Act XXI of 1923.

No. and date in Recovery Register.			Description of articles.	Approximate value.	Where and when recovered.	Where lying.
				Rs.		
August 1931 ..	11th	4 P. A.	92½ fms. 2⅞" studlink chain ..	2,153 0 0	Jellingham Channel.	River bank close to Tuckta Ghat.
			5 „ 2¼" „ „ ..	147 0 0		
			3¼ ton stockless anchor ..	857 8 0		
			Total ..	3,157 8 0		

C. V. L. NORCOCK, Deputy Conservator.

Port Commissioners' Office, Calcutta, the 11th August 1931.

(1729—3)

Notice.

PURSUANT to the orders of Government, dated the 20th June 1881, particulars of the undernoted articles, held by the Calcutta Port Commissioners as Receivers of Wrecks, each article being of value exceeding Rs. 100, are published for general information in accordance with the provisions of section 276 of Act XXI of 1923 :—

No. and date in Recovery Register.			Description of article.	Approximate value.	Where and when recovered.	Where lying.
				Rs.		
August 1931 ..	20th ..	3 P.	34 logs (Jarool wood) of various sizes and marks.	2,000	Recovered from the river off Shalimar between the 29th May and 10th July 1931.	Lying on the foreshore at Tuckta Ghat.

C. V. L. NORCOCK, Deputy Conservator.

Port Commissioners' Office, Calcutta, the 20th August 1931. (1784—3)

NOTICE OF SALE.

In the Court of the Sub-Judge at Asansol.

MONEY EXECUTION CASE No. 290/8 OF 1930.

Ellerman's Arracan Rice and Trading Co., decree-holders,

versus

East India Tanning Extract Co., judgment-debtors.

7. Sale of Valuable Tanning Extract Factory.

THE judgment-debtors' leasehold and other interest in the following will be sold in public auction in Asansol Sub-Judge's Court in Money Execution Case No. 290/8 of 1930 on 7th September 1931 at 12 noon.

All that piece and parcel of land containing by estimation 3 acres 2 roods situate at Purandwip, in mauza Bansra, police-station and sub-registry Raniganj, chowki Asansol, district Burdwan, commonly known as " Rang Kuti ".

All that piece and parcel of land situate at Purandwip aforesaid and containing an area of 1 bigha 18 cottahs.

All that messuage tenement and bungalow together with land thereunto belonging whereon or on part where the same is erected and built containing by measurement 4 bighas 13 cottahs 10 chittaks more or less, situate in mauza Bansra aforesaid.

All that piece and parcel of land comprising respectively 2 bighas 9 cottahs 9 chittaks and 2 bighas 11 cottahs 4 chittaks and 1 bigha 11 cottahs 11 chittaks, all situate in mauza Bansra aforesaid.

All that piece and parcel of land in two strips, an aggregate area of 1 bigha 13 cottahs and thereabouts, situated in mauza Bansra aforesaid.

All that piece and parcel of land also situate in mauza Bansra aforesaid containing an area of 1 bigha 4 cottahs 12·75 chittaks.

All that piece and parcel of land situate in mauza Bansra aforesaid containing an area of 2 bighas 16 cottahs 4 chittaks.

All that piece and parcel of land situate in mauza Bansra aforesaid containing an area of 1 bigha 10 cottahs.

All that piece and parcel of land together with the bungalow erected thereon known as the Bansra aforesaid lot, Chora thana and sub-registry Raniganj, the aforesaid properties, together with all buildings and premises described on the land hereinbefore mentioned, together with boilers, pump and machinery of every description and all tools, appliances, furniture and chattels of every kind situate and being on the said land, building and premises hereinbefore described, excluding only the following articles and machineries already situate, lying and being on the sideland belonging to Pranada Syndicate :—

1. Pranada Plant consisting of (1) disintegrator and incorporator, (2) shafting pulleys, and plumen blocks, (3) drying plates, (4) wax pot, (5) fire extinguishers, (6) grinding mills, (7) bitumen, (8) timber for supporting and flooring drying plates, (9) lightning conductor, (10) scales and weights, (11) workers' clothing, (12) sundry tools, (13) padlocks, (14) sundry fitting and store, (15) iron plates for doors.

2. Stocks and sundries of the above Pranada Syndicate—Paraffin 200 lbs., 5 lead blocks, 1 Chevrolet car No. 25407, nitrate of soda 2 cwts., ammon. chloride 5½ lbs.

3. Articles and machineries in Pranada Magazine in the danga land—Pranada explosives 200 lbs., iron plates for doors, padlock, woodwork for doors and sundries, lightning conductor, sundry stocks, one 9 K. W. motor and engine lying in the power house of the judgment-debtors, excluding also the personal furniture and belongings of the employees of the judgment-debtors' firm in the bungalows aforesaid.

All the lands except plots " R " and " S " described in plan filed in Court are held under a lease, dated 22nd May 1924, for 99 years at an yearly rental of Rs. 465 only.

The property marked " R " in the plan held under a lease, dated 1st August 1917, for term 980 years, subject to determination at any time on the determination of coal mining lease of mauza Bansra.

The plot marked " S " in the plan and known as Bansra bungalow is also leased for Raniganj Coal Association.

The approximate value of the property is Rs. 1,20,000.

And out of 236 tons, that of 113 tons myroballams, the property of the judgment-debtors, about Rs. 10,000.

Further particulars may be obtained from Sanderson & Co., Solicitors, 26, Dalhousie Square, Calcutta.

A. K. CHAKRAVARTY, Sub-Judge.

Asansol, the 12th August 1931. (1721—1)

In the Court of the Sub-Judge at Nadia.

MONEY EXECUTION CASE No. 101 of 1931.

Asiatic Petroleum Co. (India), Ltd., of Calcutta, decree-holder,

versus

(1) Mohini Mohan Banerjee and (2) Nripendra Nath Mukherjee, judgment-debtors.

Date of sale---8th September 1931.

1. THE undivided one-sixth share of the second judgment-debtor Nripendra Nath Mukherjee in the Berakamgachi Krishnapur Chak and Kamgachi estate bearing tauzi No. 111 of the Nadia Collectorate, revenue Rs. 843-9-9 payable to the Government in 16 annas share. Valued Rs. 1,000.

A. District Nadia, police-station Ranaghat, mauza Kamgachi No. 17, tauzi No. 111, pargana Ukra (taraf Kowgachi.)

No. of Khatian.	Land.
20	1678—17

B. District Nadia, police-station Ranaghat, mauza Krishnapur Chak, No. 11, tauzi No. 111, pargana Ukra (taraf Kowgachi).

No. of Khatian.	Land.
2, 3, 4, 5, 6, 7, 8, 9, 10.	1—94.

C. District Nadia, police-station Ranaghat, mauza Berakamgachi No. 10, tauzi No. 111, pargana Ukra (taraf Kowgachi).

No. of Khatian.	Land.
7	176—84.

T. P. CHATTERJI, Sub-Judge.

Krishnagar, the 18th August 1931.

(1751—1)

In the Court of the Sub-Judge at Rangpur.

OTHER (MORTGAGE) EXECUTION CASE No. 64 of 1931.

Gaibandha Loan Office, Ltd., judgment-creditor,

versus

Gourbinodo Chowdhuri, judgment-debtor.

TO be peremptorily sold, pursuant to an order of this Court in the abovementioned case, by public auction on Saturday, the 5th September 1931, at 12 noon, in the Court compound, the undermentioned zemindari properties belonging to the abovenamed judgment-debtor.

The following mauzas appertaining to the mahal No. 668 of the Rangpur Collectorate tauzi which are within police-station and sub-registry offices of Palasbari and Gobindagunj within the jurisdiction of the district of Rangpur and within pargana Sikshahar.

Of the mauzas (1) Amlagachi, (2) Mahadipur, (3) Bazuniapara, (4) Nasoi, (5) Hosanpur, (6) Jhapor, excepting Amlagachi, *rakam* 16 annas of the rest five mauzas and mauzas Betkapa, Barisal, Bishudanga, Bamankuri, Bammia, Bhagaripara, Kusumdaha, Kumargari, Dumorgacha, Goroyagidari, Goalpara, Harinabari, Hatiadaha, Hattaleya, Hatbari, Marupara, Naldanga, Nakata, Mudafat Nandisahar, Putabari, Pakhra, Ramchandrapur, Syampur, Makaddampur, Sapdin, Bhagabatipur. Sibtala, Sapgachi, Kisamat Nandisahar, Gopinathpur. To all of which 8 annas 6 pies share belongs to the said judgment-debtor who got his name registered in the aforesaid Collectorate tauzi to that extent, and for which a separate number has been fixed in the said tauzi [being No. 668(1) of the tauzi].

The total amount of revenue and cess payable for the said mahal No. 668 (1) is Rs. 1,647-4-5 pies and Rs. 617-4-6 pies, respectively, but deducting Rs. 96-11-9, the revenue for mauza Amlagachi, the total amount of revenue for the aforesaid mortgaged properties is Rs. 1,550-8-10 pies.

In terms of the Will, dated 9th Kartik 1928, there is a charge on the said properties by which Sreejukta Monorama Chowdhurani will get a maintenance at the rate of Rs. 5 per month. With this charge the properties would be sold.

The amount for the recovery of which the properties have been directed to be sold is Rs. 63,674-2-3 being the balance of the total decretal amount of Rs. 73,610-6-6 *plus* Rs. 2,897-14-9 costs.

M. N. CHAUDHURY, Sub-Judge.

Rangpur, the 13th August 1931. (1722—1)

In the Court of the Sub-Judge at Bankura.

MORTGAGE EXECUTION CASE No. 35 of 1930.

Maharajadhiraja Kameswara Singh of Darbhanga, decree-holder,

versus

Chakradhar Singh Deo and others of Hariharganj, police-station Raipore, district Bankura, judgment-debtors.

NOTICE is hereby given that the properties, particularly described in the schedule given below, will be sold by public auction, in satisfaction of the decree under execution in the case aforesaid, in the premises of the Court of the Sub-Judge of Bankura, on the 7th September 1931, at 12 noon, or on such further date and at such further time as the Court may be pleased in that behalf.

N. K. MUKHARJI, Sub-Judge.

Bankura, the 15th August 1931.

Properties under sale.

Schedule "Ka" mentioned in the written statement of defendant No. 1.

Taraf Barpakhan.

Lot No. 1.—Mauzas Bara-Moukura, Jamirapara, Panchur, Murarpore, Khaluimura, Tapta, Damdi, Dhepua, Chaklara, Bagjanta, Jhola, Banpore, Basudevpore, Kasthogara, Dharampore, Boliakola, Bouncha, Barpakhan, Parasia, Dhadka, Neturpore, Saltara, Saraoskole.

Taraf Bhagra.

Mauzas Chatri, Chhiruberia, Siarbeda, Manhara, Lochhipore, Madhupore, Pirra, Khalpara, Damdi, Haludkanali, Kesia, Karamara, Nutandihi, Malcharor, Khamardanga, Kuadah, Dhadkidihi, Patamura, Bargram, Bounchi.

The abovenamed mauzas mentioned in the said schedule "Ka" situate within the district of Bankura, thana Raipore, chowki Khatra, and within tauzi No. 995 of Bankura Collectorate. The yearly revenue whereof of the said tauzi No. 995 is Rs. 2,657-5-2 payable to the Collector, Bankura. The value of the said mauzas, by estimation, is Rs. 15,000.

Schedule "Kha."

Taraf Deuli.

Lot No. 2.—Mauzas Singnamohan, Amchura, Beliapara, Bhatermetal, Dhadkidanga, Budhakalsapa, Asarda, Chandpara, Taldiha, Barapara, Bhulunpore, Kaptisole, Jaspara, Parkura, Bhataijuri, Danrparah, Kaotchita, Kadamdihi, Telibari, Patlurki, Dhurupsole, Simlikonje, Dublala, Paldapara, Ekduara, Punatore, Kumardihi, Panijore, Kankrasole, Karasai.

The abovenamed mauzas mentioned in the said schedule "Kha" situate within the district of Bankura, thana Raipore, mahal Raipore, chowki Khatra, and within tauzi No. 995 of Bankura Collectorate. The yearly revenue whereof of the said tauzi No. 995 is Rs. 2,657-5-2 payable to the Collector, Bankura. The value of the mauzas aforesaid is, by estimation, Rs. 12,000.

Schedule of mortgaged property.

Lot No. 3.—The properties known as pargana Raipore situate within the district of Bankura, thana Raipore, chowki Khatra, bearing tauzi No. 995 on the revenue roll of the Bankura Collectorate, with the exception of one Chawk *Rakha* (preserved) jungle and Sanja Mahal and large trees and a "Daha" situate therein excluded by the potta and the mortgage bond, dated the 29th November 1875, further excluding the mauzas mentioned in schedules "Ka" and "Kha" of the written statement of defendant No. 1 and the mauzas mentioned in the schedule "Ka" of the written statement of defendant No. 30, all the zamindary rights of all other mauzas of the said pargana Raipore. The yearly revenue whereof of the said tauzi No. 995 is Rs. 2,657-5-2 payable to the Collector, Bankura.

Be it noted that mauzas Bisanpore and Lohapara in lot No. 3 will be sold subject to the mortgages of defendant No. 8 over these mauzas which the auction-purchaser shall have right to redeem. The value of the property with the said encumbrance is, by estimation, Rs. 50,000.

Schedule "Ka" mentioned in the written statement of defendant No. 30.

Lot No. 4.—Mauzas Khaorpahari, Asna, Baragarra, Chhotagarra, situate within the district of Bankura, pargana and thana Raipore, chowki Khatra and within tauzi No. 995 of Bankura Collectorate. The revenue whereof of the said tauzi No. 995 is Rs. 2,657-5-2 payable to the Collector, Bankura. The value of the mauzas is, by estimation, Rs. 1,500.

N. K. MUKHARJI, Sub-Judge.

Bankura, the 15th August 1931. (1753—1)

In the Court of the Sub-Judge of Birbhum.

TITLE EXECUTION CASE No. 40 OF 1931.

Prabhabati Debi of No. 15, Sarkar Lane, Calcutta, decree-holder,

versus

Sudhakar Majumdar and others of Supur, chowki Bolpur, district Birbhum, judgment-debtors.

THE following property of the judgment-debtors will be sold at auction sale on 1st October 1931 at 12 noon in the Court sale room by the Nazir of the Court for realisation of Rs 2,892-14-6 :—

Schedule of property.

Eight annas share of Huda Hansra, tauzi No. 4 of the Birbhum Collectorate, bearing revenue Rs. 41,236-7-8 in 16 annas share.

A. C. GANGULY, Sub-Judge.

Suri, the 14th August 1931. (1723—1)

SUMMONS FOR DISPOSAL OF SUIT.

In the 3rd Court of the Sub-Deputy Collector at Deoghar, district Santal Parganas.

RENT SUIT No. 179 OF 1931.

To Purnanand Chatterjee.

WHEREAS the receiver of the Rohini estate has instituted a rent suit against you for Rs. 111-7-6 as arrears of rent from 1334 to 1336 B.S. with interest for the holding standing in your name in mauza Shyamganj, Deoghar town, you are hereby summoned to appear in this Court in person or by your authorised agent to answer the claim on the 11th day of September 1931 at 10-30 a.m., failing which the case should be decided *ex parte*.

Given under my hand and seal of this Court this 10th day of August 1931.

S. A. ALI, Sub-Deputy Collector.

(1703—2—1731)

SUMMONS FOR DISPOSAL OF SUIT.

In the 3rd Court of the Sub-Deputy Collector at Deoghar, district Santal Parganas.

RENT SUIT No. 176 OF 1931.

To Kalidas Nandy.

WHEREAS the receiver of the Rohini estate has instituted a rent suit against you for Rs. 23-7 as arrears of rent from 1334 to 1336 B. S. with interest for the holding standing in your name in mauza Shyamganj, Deoghar town, you are hereby summoned to appear in this Court in person or by your authorised agent to answer the claim on the 11th day of September 1931 at 10-30 a.m., failing which the case should be decided *ex parte*.

Given under my hand and seal of this Court this 10th day of August 1931.

S. A. ALI, Sub-Deputy Collector.

(1704—2—1732)

SUMMONS FOR DISPOSAL OF SUIT.

In the 3rd Court of the Sub-Deputy Collector at Deoghar, district Santal Parganas.

RENT SUIT No. 180 OF 1931.

To Suprava Dassi.

WHEREAS the receiver of the Rohini estate has instituted a rent suit against you for Rs. 76-14 as arrears of rent from 1334 to 1336 B.S. with interest for the holding standing in your name in mauza Shyamganj, Deoghar town, you are hereby summoned to appear in this Court in person or by your authorised agent to answer the claim on the 11th day of September 1931, at 10-30 a.m., failing which the case should be decided *ex parte*.

Given under my hand and seal of this Court this 10th day of August 1931.

S. A. ALI, Sub-Deputy Collector.

(1705—2—1733)

SUMMONS FOR DISPOSAL OF SUIT.

In the 3rd Court of the Sub-Deputy Collector at Deoghar, district Santal Parganas.

RENT SUIT No. 151 OF 1931.

To Madhab Chandra Bhaumik.

WHEREAS the receiver of the Rohini estate has instituted a rent suit against you for Rs. 53-13 as arrears of rent from 1334 to 1336 B.S. with interest for the holding standing in your name in mauza Baghmara, town Deoghar, you are hereby summoned to appear in this Court in person or by your authorised agent to answer the claim on the 8th day of September 1931 at 10-30 a.m., failing which the case should be decided *ex parte*.

Given under my hand and seal of the Court this 10th day of August 1931.

S. A. ALI, Sub-Deputy Collector.

(1706—2—1734)

SUMMONS FOR DISPOSAL OF SUIT.

In the 3rd Court of the Sub-Deputy Collector at Deoghar, district Santal Parganas.

RENT SUIT No. 104 OF 1931.

To Khitish Chandra Banerjee.

WHEREAS the receiver of the Rohini estate has instituted a rent suit against you for Rs. 76-14 as arrears of rent from 1334 to 1336 B. S. with interest for the holding standing in your name in mauza Baghmara, you are hereby summoned to appear in this Court in person or by your authorised agent to answer the claim on the 15th day of September 1931, at 10-30 a.m., failing which the case should be decided *ex parte*.

Given under my hand and seal of this Court this 10th day of August 1931.

S. A. ALI, Sub-Deputy Collector.

(1707—2—1735)

SUMMONS FOR DISPOSAL OF SUIT.

In the 3rd Court of the Sub-Deputy Collector at Deoghar, district Santal Parganas.

RENT SUIT No. 103 OF 1931.

To Jotish Chandra Rai Chaudhury.

WHEREAS the receiver of the Rohini estate has instituted a rent suit against you for Rs. 76-14 as arrears of rent from 1334 to 1336 B. S. with interest for the holding standing in your name in mauza Baghmara, you are hereby summoned to appear in this Court in person or by your authorised agent to answer the claim on the 28th day of August 1931 at 10-30 a.m., failing which the case should be decided *ex parte*.

Given under my hand and seal of this Court this 10th day of August 1931.

S. A. ALI, Sub-Deputy Collector.

(1708—2—1736)

SUMMONS FOR DISPOSAL OF SUIT.

In the 3rd Court of the Sub-Deputy Collector at Deoghar, district Santal Parganas.

RENT SUIT No. 102 OF 1931.

To Babu Tarini Charan Chakrabarty.

WHEREAS the receiver of the Rohini estate has instituted a rent suit against you for Rs. 56-4 as arrears of rent from 1334 to 1336 B. S. with interest for the holding standing in your name in mauza Shamganj, Deoghar town, you are hereby summoned to appear in this Court in person or by your authorised agent to answer the claim on the 28th day of August 1931, at 10-30 a.m., failing which the case should be decided *ex parte*.

Given under my hand and seal of this Court this 10th day of August 1931.

S. A. ALI, Sub-Deputy Collector.

(1709—2)

SUMMONS FOR DISPOSAL OF SUIT.

In the 4th Court of the Sub-Deputy Collector at Deoghar, district Sonthal Parganas.

RENT SUIT No. 244 of 1931.

To Babu Indu Bhusan Kar.

WHEREAS the receiver of Rohini estate has instituted a rent suit against you for Rs. 15 as arrears of rent from 1334 to 1336 B.S. with interest for the holding standing in your name in mauza Shamganj, Deoghar town, you are hereby summoned to appear in this Court in person or by your authorised agent to answer the claim on the 10th day of September 1931, at 10-30 a. m., failing which the case should be decided *ex parte*.

Given under my hand and seal of this Court this 11th day of August 1931.

PRABHU NARAYAN, Sub-Deputy Collector.

(1740—2—1775)

SUMMONS FOR DISPOSAL OF SUIT.

In the 4th Court of the Sub-Deputy Collector at Deoghar, district Sonthal Parganas.

RENT SUIT No. 243 of 1931.

To Babu Tapendra Kumar Gangopadhya, Babu Sachindra Kumar Gangopadhya, Babu Biswambhar Gangopadhya, Babu Nilambar Gangopadhya.

WHEREAS the receiver of the Rohini estate has instituted a rent suit against you for Rs. 48-2 as arrears of rent from 1334 to 1336 B. S. with interest for the holding standing in your name in mauza Bompas town, Deoghar, you are hereby summoned to appear in this Court in person or by your authorised agent to answer the claim on the 10th day of September 1931, at 10-30 a.m., failing which the case should be decided *ex parte*.

Given under my hand and seal of this Court this 11th day of August 1931.

PRABHU NARAYAN, Sub-Deputy Collector.

(1741—2—1776)

SUMMONS FOR DISPOSAL OF SUIT.

In the 4th Court of the Sub-Deputy Collector at Deoghar, district Sonthal Parganas.

RENT SUIT No. 112 of 1931.

To Babu Manmatha Nath Sen.

WHEREAS the receiver of Rohini estate has instituted a rent suit against you for Rs. 38-7 as arrears of rent from 1334 to 1336 B.S. with interest for the holding standing in your name in mauza Shamganj, Deoghar town, you are hereby summoned to appear in this Court in person or by your authorised agent to answer the claim on the 10th day of September 1931, at 10-30 a.m., failing which the case should be decided *ex parte*.

Given under my hand and seal of this Court this 14th day of August 1931.

PRABHU NARAYAN, Sub-Deputy Collector.

(1742—2—1777)

SUMMONS FOR DISPOSAL OF SUIT.

In the 4th Court of the Sub-Deputy Collector at Deoghar, district Sonthal Parganas.

RENT SUIT No. 195 of 1931.

To Babu Dinanath Mukherjee.

WHEREAS the receiver of Rohini estate has instituted a rent suit against you for Rs. 31-14 as arrears of rent from 1334 to 1336 B. S. with interest for the holding standing in your name in mauza Shyamganj, Deoghar town, you are hereby summoned to appear in this Court in person or by your authorised agent to answer the claim on the 10th day of September 1931, at 10-30 a. m., failing which the case should be decided *ex parte*.

Given under my hand and seal of this Court this 10th day of August 1931.

PRABHU NARAYAN, Sub-Deputy Collector.

(1743—2—1778)

SUMMONS FOR DISPOSAL OF SUIT.

In the 4th Court of the Sub-Deputy Collector at Deoghar, district Sonthal Parganas.

RENT SUIT No. 212 of 1931.

To Babu Bipin Behari Chatterjee.

WHEREAS the receiver of the Rohini estate has instituted a rent suit against you for Rs. 21-9 as arrears of rent from 1334 to 1336 B.S. with interest for the holding standing in your name in mauza Shamganj, Deoghar town, you are hereby summoned to appear in this Court in person or by your authorised agent to answer the claim on the 25th day of September 1931, at 10-30 a.m., failing which the case should be decided *ex parte*.

Given under my hand and seal of this Court this 10th day of August 1931.

PRABHA NARAYAN, Sub-Deputy Collector.

(1744—2—1779)

SUMMONS FOR DISPOSAL OF SUITS.

In the 4th Court of the Sub-Deputy Collector at Deoghar, district Sonthal Parganas.

RENT SUIT No. 191 of 1931.

To Babu Haridas Ghosh.

WHEREAS the receiver of Rohini estate has instituted a rent suit against you for Rs. 21-15 as arrears of rent from 1334 to 1336 B.S. with interest for the holding standing in your name in mauza Shamganj, Deoghar town, you are hereby summoned to appear in this Court in person or by your authorised agent to answer the claim on the 25th day of September 1931, at 10-30 a.m., failing which the case should be decided *ex parte*.

Given under my hand and seal of this Court this 11th day of August 1931.

PRABHU NARAYAN, Sub-Deputy Collector.

(1745—2—1780)

In the High Court of Judicature at Fort William in Bengal, in insolvency.

NOTICE OF ADJUDICATION ORDER.

No. 65 of 1931.

Re Banshidhar Jalan and Kanyalal Jalan, both residing at No. 52, Zakaria Street, in the town of Calcutta, and lately carrying on business in co-partnership as jute merchants at No. 71, Burtola Street, in Calcutta aforesaid, and under the name and style of Banshidhar Kanyalal and at No. 52, Zakaria Street aforesaid, under the name and style of Kanyalal Jalan. *Ex parte* the creditor.

K. K. Dutt & Co., creditor firm's solicitors.

ON the 18th day of March 1931 an order was made by the High Court of Judicature at Fort William in Bengal in its insolvency jurisdiction adjudging the abovenamed as an insolvent.

NOTE.—All debts due to the estate should be paid to me.

Dated this 19th day of August 1931.

G. M. FALKNER, Official Assignee.

In the High Court of Judicature at Fort William in Bengal, in insolvency.

NOTICE OF ADJUDICATION ORDER.

No. 196 of 1931.

Re Monindra Nath Rakhit, lately residing and carrying on business at No. 169, Bowbazar Street in the town of Calcutta. *Ex parte* the creditor.

R. K. Bose, creditor firm's solicitor.

ON the 14th day of August 1931, an order was made by the High Court of Judicature at Fort William in Bengal in its insolvency jurisdiction adjudging the abovenamed as an insolvent.

NOTE.—All debts due to the estate should be paid to me.

Dated this 19th day of August 1931.

G. M. FALKNER, Official Assignee.

In the High Court of Judicature at Fort William in Bengal, in Insolvency.

NOTICE OF ADJUDICATION ORDER.

No. 186 of 1931.

Re Aswini Kumar Das, residing at No. 12, Lower Chitpur Road, in the town of Calcutta, and lately carrying on business in piece-goods in co-partnership under the name, style and firm of Raj Chandra Adhar Chandra Das at Sylhet and at present carrying on business in rice in co-partnership at No. 350, Tirrota Bazar (No. 12, Lower Chitpur Road), under the name and style of Sarat Chandra Mukherjee Chintamoni Das and at No. 333, Tirrota Bazar aforesaid, under the name and style of Chintamoni Dasharath Das, *ex parte* the debtor.

M. M. Chatterjee, debtor's solicitor.

ON the 3rd day of August 1931, an order was made by the High Court of Judicature at Fort William in Bengal in its insolvency jurisdiction adjudging the abovenamed as an insolvent.

NOTE.—All debts due to the estate should be paid to me.

Dated this 17th day of August 1931.

G. M. FALKNER, Official Assignee.

In the High Court of Judicature at Fort William in Bengal, in Insolvency.

NOTICE OF ADJUDICATION ORDER.

No. 197 of 1931.

Re Alfred Edward Huyshe, residing at No. 75, Park Street, in the town of Calcutta, and carrying on business as Marine Store Agents under the name and style of Huyshe & Co. at No. 7, Wellesley Place, in Calcutta aforesaid, *ex parte* the debtor.

M. H. Haq, debtor's solicitor.

ON the 11th day of August 1931, an order was made by the High Court of Judicature at Fort William in Bengal in its insolvency jurisdiction adjudging the abovenamed as an insolvent.

NOTE.—All debts due to the estate should be paid to me.

Dated this 17th day of August 1931.

G. M. FALKNER, Official Assignee.

In the High Court of Judicature at Fort William in Bengal, in Insolvency.

NOTICE OF ADJUDICATION ORDER.

No. 199 of 1931.

Re Stanislaus Mortimer Burress, residing at No. 70, Wellesley Street, in the town of Calcutta, Senior Superintendent, English Office of the Calcutta High Court, Appellate Side, *ex parte* the debtor in person.

ON the 13th day of August 1931, an order was made by the High Court of Judicature at Fort William in Bengal in its insolvency jurisdiction adjudging the abovenamed as an insolvent.

NOTE.—All debts due to the estate should be paid to me.

Dated this 17th day of August 1931.

G. M. FALKNER, Official Assignee.

In the High Court of Judicature at Fort William in Bengal, in Insolvency.

NOTICE OF ADJUDICATION ORDER.

No. 200 of 1931.

Re Khagendra Chandra Deb, residing at No. 14-1, Issur Mill Lane, in the town of Calcutta, and lately employed as an assistant of Messrs. Jardine Skinner & Co., at No. 4, Clive Row, in Calcutta aforesaid, but at present of no occupation, *ex parte* the debtor.

G. B. Chatterjee, debtor's solicitor.

ON the 13th day of August 1931, an order was made by the High Court of Judicature at Fort William in Bengal in its insolvency jurisdiction adjudging the abovenamed as an insolvent.

NOTE.—All debts due to the estate should be paid to me.

Dated this 19th day of August 1931.

G. M. FALKNER, Official Assignee.

In the High Court of Judicature at Fort William in Bengal, in Insolvency.

NOTICE OF ADJUDICATION ORDER.

No. 201 of 1931.

Re Percival Kenneth Grueber, residing at No. 113A, Grant Street in the town of Calcutta, employed as a clerk by Messrs. J. B. Norton & Co., at No. 2, Old Court House Street, in Calcutta aforesaid, *ex parte* the debtor in person.

ON the 14th day of August 1931, an order was made by the High Court of Judicature at Fort William in Bengal in its insolvency jurisdiction adjudging the abovenamed as an insolvent.

NOTE.—All debts due to the estate should be paid to me.

Dated this 19th day of August 1931.

G. M. FALKNER, Official Assignee.

In the Court of the Sub-Judge at Asansol.

Section 10 (2) of the Provincial Insolvency Act.

INSOLVENCY CASE No. 39 of 1931.

NOTICE is hereby given to his creditors that the insolvency petition filed by R. V. Holmes, driver, East Indian Railway, Asansol, has been admitted and the 11th day of September 1931 has been fixed for hearing thereof.

A. K. CHAKRAVARTY, Sub-Judge.

Asansol, the 11th August 1931. (1726—1)

In the Court of the Sub-Judge at Asansol.

Section 10 (2) of the Provincial Insolvency Act.

INSOLVENCY CASE No. 41 of 1931.

NOTICE is hereby given to his creditors that the insolvency petition filed by H. Gammon, driver, East Indian Railway, Asansol, has been admitted and the 11th day of September 1931 has been fixed for hearing thereof.

A. K. CHAKRAVARTY, Sub-Judge.

Asansol, the 11th August 1931. (1727—1)

NOTICE TO CREDITORS OF THE DATE OF HEARING OF AN INSOLVENCY PETITION.

Section 10 of the Provincial Insolvency Act, V of 1920.

In the Court of the District Judge at Chittagong.

INSOLVENCY APPLICATION No. 26 of 1931.

WHEREAS Debendra Lal Datta, son of late Purna Ch. Datta, of Kandakiya, police-station Hathazari, Chittagong, has applied to this Court, by a petition, dated 13th day of June 1931, to be declared an insolvent under the Provincial Insolvency Act, V of 1920, this is to give notice to his creditors that the Court has fixed the 17th day of September 1931 for hearing of the aforesaid petition and the examination of the debtor.

J. YOUNIS, District Judge.

Chittagong, the 5th August 1931. (1649—1—1784)

NOTICE TO CREDITORS OF APPLICATION FOR DISCHARGE.

Section 41 (1) of the Provincial Insolvency Act, V of 1920.

In the Court of the District Judge at Chittagong.

INSOLVENCY CASE No. 43 of 1930.

Nural Haque Sadagor, son of Nadirajama, of Rasidabad, police-station Patiya, Chittagong, applicant.

TAKE notice that the abovenamed insolvent has applied at the Court for his discharge, and that the Court has fixed the 14th day of September 1931, at 10 o'clock, for hearing the application.

Dated this 4th day of August 1931.

J. YOUNIS, District Judge.

(1650—1—1785)

NOTICE TO CREDITORS OF THE DATE OF HEARING OF AN INSOLVENCY PETITION.

Section 19 of the Provincial Insolvency Act, V of 1920.

In the Court of the District Judge at Chittagong.

INSOLVENCY APPLICATION No. 24 of 1931.

WHEREAS (1) Gour Chandra De, son of Krishna Chandra De, and (2) Raj Chandra De, son of Krishna Chandra De, of Habilasdwip, police-station Patiya, have applied to this Court, by a petition, dated 3rd day of July 1931, to be declared insolvents under the Provincial Insolvency Act, V of 1920, this is to give notice to their creditors that the Court has fixed the 18th day of September 1931 for the hearing of the aforesaid petition and the examination of the debtors.

J. YOUNIS, District Judge.

Chittagong, the 8th August 1931. (1672—1—1786)

ORDER OF ADJUDICATION.

Section 27 of the Provincial Insolvency Act, V of 1920.

In the Court of the District Judge at Chittagong.

INSOLVENCY APPLICATION No. 8 of 1931.

PURSUANT to a petition, dated 11th March 1931, filed by Neaj Rahaman, son of Ali Hossain, of Khitap Char, police-station Boalkhali, Chittagong, and on the application of the petitioner and on reading the petition and hearing the pleader, it is ordered that the debtor be and the said debtor is hereby adjudged insolvent. Mr. J. R. Percival is appointed receiver.

It is further ordered that the debtor do apply for his discharge by 6th February 1932.

Dated this 5th day of August 1931.

J. YOUNIS, District Judge.

(1673—1—1787)

In the Court of the District Judge of Hooghly.

INSOLVENCY PETITION No. 65 of 1930.

NOTICE is hereby given that Harendra Krishna Daw, son of Priya Nath Daw, of Rishra, thana Serampore, district Hooghly, was on the 18th day of July 1931 adjudged an insolvent. The 9th day of September 1931 has been fixed for framing a schedule and creditors are required to prove their claims on that date.

S. SEN, District Judge.

Chinsura, the 10th August 1931. (1730—1—1774)

In the Court of the District Judge of Hooghly.

NOTICE is hereby given, under clause (2) of section 12 of the Provincial Insolvency Act, V of 1920, to his creditors that the insolvency petition of Bejoy Krishna Pal, son of late Nafar Chandra Pal of Nayapara, thana Tarakeswar, district Hooghly, has been admitted by this Court as No. 49 of 1931, and that the 12th September 1931 has been fixed for the hearing thereof.

S. SEN, District Judge.

Chinsura, the 14th August 1931. (1749—1—1781)

In the Court of the District Judge of Hooghly.

NOTICE is hereby given, under clause (2) of section 12 of the Provincial Insolvency Act, V of 1920, to his creditors that the insolvency petition of Akshay Lal Set, son of late Khetra Nath Set of Bansbaria, thana Magra, district Hooghly, has been admitted by this Court as No. 51 of 1931, and that the 10th September 1931 has been fixed for the hearing thereof.

S. SEN, District Judge.

Chinsura, the 12th August 1931. (1750—1—1782)

In the Court of the District Judge of Mymensingh.

INSOLVENCY CASE No. 35 of 1931.

ON the application of Messrs. Multan Chand Chaut Mull, creditors, against their debtors Messrs. Akhoy Chand Prithiraj Bogwani at Kabibazar in Sherpur town and also at Jhinaigati Bazar, police-station Nalitabari within the district of Mymensingh, for adjudicating the said debtors insolvents, notice is hereby given to all their creditors that the said petition has been admitted by this Court and that 12th day of September 1931 has been fixed for hearing the case.

R. F. LODGE, District Judge.

Mymensingh, the 12th August 1931. (1720—1)

In the Court of the District Judge of Mymensingh.

INSOLVENCY CASE No. 32 of 1931.

ON the application of Messrs. Hiralal Kisonlal, creditor firm, against their debtors Kailash Chandra Dutta, Jagneswar Dutta and Benode Behari Roy carrying on business in partnership at Gouripur, police-station Iswargunge in the district of Mymensingh, under the style of Jagneswar Dutta Basanta Kumari Dutta and Saralata Roy, for adjudicating the said debtors insolvents, notice is hereby given to all their creditors that the said petition has been admitted by this Court and that 5th day of September 1931 has been fixed for hearing the case.

R. F. LODGE, District Judge.

Mymensingh, the 14th August 1931. (1725—1)

In the Court of the District Judge of Mymensingh.

INSOLVENCY CASE No. 34 of 1931.

NOTICE is hereby given that Nanda Kishore Saha, son of late Chandra Kishore Saha, of Domkona, police-station Kishoreganj, district Mymensingh, has applied to this Court to be adjudged an insolvent and the 5th day of September 1931 has been fixed for hearing the case.

R. F. LODGE, District Judge.

Mymensingh, the 15th August 1931. (1752—1)

In the Court of the District Judge of Mymensingh.

INSOLVENCY CASE No. 36 of 1931.

NOTICE is hereby given that Gobinda Chandra Saha, son of late Goloke Chandra Saha, of Daulatpur, police-station Mohanganj, district Mymensingh, has applied to this Court to be adjudged an insolvent and the 12th day of September 1931 has been fixed for hearing the case.

R. F. LODGE, District Judge.

Mymensingh, the 19th August 1931. (1759—1)

ORDER ANNULLING ADJUDICATION.

Section 43 of the Provincial Insolvency Act, V of 1920.

In the Court of the District Judge of Pabna and Bogra.

INSOLVENCY CASE No. 41 of 1927.

Re Sasthi Charan Das, son of late Jagat Chandra Das, of Tarash, police-station Tarash and district Pabna, debtor-insolvent.

COURT'S order for applying for discharge within the period specified having not been complied with, the order of adjudication made on 2nd July 1930 is hereby annulled.

K. C. CHUNDER, District Judge.

Pabna, the 18th August 1931.

In the Court of the District Judge of Pabna and Bogra.

INSOLVENCY CASE No. 40 of 1931.

WHEREAS Asad Ali Khan, son of late Abdul Khan, of Naskarpur, police-station and district Pabna, has applied to this Court by a petition, dated 8th August 1931, to be declared an insolvent, this is to give notice to all his creditors that the Court has fixed the 8th September 1931 for hearing of the aforesaid petition and for examination of the debtor.

K. C. CHUNDER, District Judge.

Pabna, the 17th August 1931. (1747—1)

ORDER OF ADJUDICATION.

Section 27 of the Provincial Insolvency Act, V of 1920.

In the Court of the District Judge of Pabna and Bogra.

INSOLVENCY CASE No. 63 OF 1930.

Re Firm styled as Makhan Lal, Harinarayan Bhattacharjee of Mokam Gola Saratnagar, police-station Faridpur and district Pabna, debtor.

ON the 18th day of August 1931, an order was made by the District Judge of Pabna and Bogra in its insolvency jurisdiction adjudging the abovenamed debtor an insolvent. He will apply for discharge within a year.

K. C. CHUNDER, District Judge.

Pabna, the 19th August 1931. (1757—1)

In the Court of the District Judge of Pabna and Bogra.

INSOLVENCY CASE No. 39 OF 1931.

WHEREAS Sonaulla Sarkar, son of late Sham Pramanik of Charpathalia, police-station Sherpur and district Bogra, has applied to this Court, by a petition, dated 14th July 1931, to be declared an insolvent, this is to give notice to all his creditors that the Court has fixed the 17th September 1931 for hearing of the aforesaid petition and for examination of the debtor.

K. C. CHUNDER, District Judge.

Pabna, the 19th August 1931. (1758—1)

In the Court of the District Judge of Rajshahi.

INSOLVENCY CASE No. 41 OF 1931.

NOTICE is hereby given that Srimanta Nath Jog of Sonapatil, police-station Nator, district Rajshahi, has applied under Act V of 1920 to be adjudicated an insolvent and that 10th September 1931 is fixed for hearing of the application.

G. G. HOOPER, District Judge.

Rajshahi, the 12th August 1931. (1761—1—1788)

In the Court of the District Judge of Rajshahi.

INSOLVENCY CASE No. 117 OF 1930.

NOTICE is hereby given that Sukur Mahamad Mondal of Debisingpara, police-station Paba, district Rajshahi, has applied under Act V of 1920 for his discharge and that 18th September 1931 is fixed for hearing of the application.

G. G. HOOPER, District Judge.

Rajshahi, the 15th August 1931. (1762—1—1789)

ORDER ANNULLING ADJUDICATION.

Section 43 of the Provincial Insolvency Act, V of 1920.

In the 4th Court of the Sub-Judge at Alipore.

INSOLVENCY APPLICATION No. 354 OF 1930.

Amrita Lal Nag, applicant.

WHEREAS Amrita Lal Nag of 27-2-3, Nepal Bhattacharjee Lane, Kalighat, 24-Parganas, debtor, does neither appear nor apply for his discharge within the specified time fixed for hearing, it is ordered that the order of adjudication, dated 10th February 1931, against the debtor be and the same is hereby annulled.

Dated this 10th day of August 1931.

S. N. ROY, Sub-Judge.

ORDER ANNULLING ADJUDICATION.

Section 43 of the Provincial Insolvency Act, V of 1920.

In the 4th Court of the Sub-Judge at Alipore.

INSOLVENCY APPLICATION No. 357 OF 1930.

Nazir Ali Molla, applicant.

WHEREAS Nazir Ali Molla of Kanchantola Badartola, 24-Parganas, debtor, does neither appear nor apply for his discharge within the specified time fixed for hearing, it is ordered that the order of adjudication, dated 3rd February 1931, against the debtor be and the same is hereby annulled.

Dated this 12th day of August 1931.

S. N. ROY, Sub-Judge.

ORDER ANNULLING ADJUDICATION.

Section 43 of the Provincial Insolvency Act, V of 1920.

In the 4th Court of the Sub-Judge at Alipore.

INSOLVENCY APPLICATION No. 393 OF 1930.

Bal Gobinda Sha, applicant.

WHEREAS Bal Gobinda Sha of 4, Shamsul Huda Lane, Ballygunge, 24-Parganas, debtor, does neither appear nor apply for his discharge within the specified time fixed for hearing, it is ordered that the order of adjudication, dated the 3rd February 1931, against the debtor be and the same is hereby annulled.

Dated this 12th day of August 1931.

S. N. ROY, Sub-Judge.

ORDER ANNULLING ADJUDICATION.

Section 43 of the Provincial Insolvency Act, V of 1920.

In the 4th Court of the Sub-Judge at Alipore.

INSOLVENCY APPLICATION No. 276 OF 1930.

A. V. Burns, applicant.

WHEREAS A. V. Burns of 151, Narkeldanga North Road, Beliaghata, 24-Parganas, debtor, does neither appear nor apply for his discharge within the specified time fixed for hearing, it is ordered that the order of adjudication, dated 11th November 1930, against the debtor be and the same is hereby annulled.

Dated this 20th day of May 1931.

S. N. Roy, Sub-Judge.

(1651—1—1740)

ORDER ANNULLING ADJUDICATION.

Section 43 of the Provincial Insolvency Act, V of 1920.

In the 4th Court of the Sub-Judge at Alipore.

INSOLVENCY APPLICATION No. 283 OF 1930.

Ghasiawani Lahar, applicant.

WHEREAS Ghasiawani Lahar of Kidderpore Bazar, Watgunj, 24-Parganas, debtor, does neither appear nor apply for his discharge within the specified time fixed for hearing, it is ordered that the order of adjudication, dated 11th November 1930, against the debtor be and the same is hereby annulled.

Dated this 20th day of May 1931.

S. N. Roy, Sub-Judge.

(1652—1—1741)

In the 4th Court of the Sub-Judge of 24-Parganas.

INSOLVENCY CASE No. 219 OF 1931.

Manilal Datta of 12-8, Goabagan Street, Beadon Street post office, Calcutta, creditor-applicant.

To Prakash Chandra Das Gupta of 40-6, Chaulpatty Road, Bhowanipore, 24-Parganas, debtor.

ON the 27th day of July 1931, it was ordered that the matter of the petition of the applicant be heard on the 31st day of August 1931, and that the said applicant do attend to be examined by this Court on that date.

S. N. Roy, Sub-Judge.

Alipore, the 1st August 1931. (1653—1—1742)

In the 4th Court of the Sub-Judge of 24-Parganas.

INSOLVENCY CASE No. 287 OF 1931.

Khandu Dhara of Paikpara, police-station Budge-Budge, 24-Parganas, applicant.

To Krista Chandra Samanta of Sanpokora, police-station Budge-Budge, 24-Parganas, and others, creditors.

ON the 1st day of August 1931, it was ordered that the matter of the petition of the applicant be heard on the 7th day of September 1931 and that the said applicant do attend to be examined by this Court on that date.

S. N. ROY, Sub-Judge.

Alipore, the 3rd August 1931. (1654—1—1743)

In the 4th Court of the Sub-Judge of 24-Parganas.

INSOLVENCY CASE No. 296 OF 1931.

Ashutosh Dass of 57-1, Raja Dinendra Street, Beliaghata, 24-Parganas, applicant.

To Kalipada Biswas of 45, Raja Dinendra Street, Calcutta, and others, creditors.

ON the 30th day of July 1931, it was ordered that the matter of the petition of the applicant be heard on the 7th day of September 1931 and that the said applicant do attend to be examined by this Court on that date.

S. N. ROY, Sub-Judge.

Alipore, the 30th July 1931. (1655—1—1744)

In the 4th Court of the Sub-Judge of 24-Parganas.

INSOLVENCY CASE No. 297 OF 1931.

Radha Binod Neogi, Chief Accounts office, Eastern Bengal Railway, Sealdah, 24-Parganas, applicant.

To Kalipada Biswas of 45, Raja Dinendra Street, Calcutta, and others, creditors.

ON the 30th day of July 1931, it was ordered that the matter of the petition of the applicant be heard on the 7th day of September 1931 and that the said applicant do attend to be examined by this Court on that date.

S. N. ROY, Sub-Judge.

Alipore, the 30th July 1931. (1656—1—1745)

In the 4th Court of the Sub-Judge of 24-Parganas.

INSOLVENCY CASE No. 298 OF 1931.

B. Samuel of 3, Nurali Lane, Beniapukur, 24-Parganas, applicant.

To Najar Khan of 33-2, Sashi Bhushan De Street, Calcutta, and others, creditors.

ON the 27th day of July 1931, it was ordered that the matter of the petition of the applicant be heard on the 7th day of September 1931 and that the said applicant do attend to be examined by this Court on that date.

S. N. ROY, Sub-Judge.

Alipore, the 30th July 1931. (1657—1—1746)

In the 4th Court of the Sub-Judge of 24-Parganas.

INSOLVENCY CASE No. 305 OF 1931.

Sheik Amir Mia of Macpherson Road, North Baranagar, Alambazar, 24-Parganas, applicant.

To Malang Khan of thana Talas, Alambazar, 24-Parganas, and others, creditors.

ON the 30th day of July 1931, it was ordered that the matter of the petition of the applicant be heard on the 7th day of September 1931 and that the said applicant do attend to be examined by this Court on that date.

S. N. ROY, Sub-Judge.

Alipore, the 1st August 1931. (1658—1—1747)

NOTICE TO CREDITORS OF APPLICATION FOR DISCHARGE.

Section 41(*1*) of the Provincial Insolvency Act, V of 1920.

In the 4th Court of the Sub-Judge at Alipore.

INSOLVENCY CASE No. 164 OF 1930.

Ramendra Nath Lahiri, 2, Gangulypara Lane, police-station Chitpore, 24-Parganas, applicant.

TAKE notice that the abovenamed insolvent has applied at the Court for his discharge, and that the Court has fixed the 7th day of September 1931, at 11 o'clock, for hearing the application.

Dated this 30th day of July 1931.

S. N. ROY, Sub-Judge.

(1659—1—1748)

NOTICE TO CREDITORS OF APPLICATION FOR DISCHARGE.

Section 41(*1*) of the Provincial Insolvency Act, V of 1920.

In the 4th Court of the Sub-Judge at Alipore.

INSOLVENCY CASE No. 340 OF 1930.

Jogendra Nath Mondal of Kasi Dutt's Garden, Baranagar, 24-Parganas, applicant.

TAKE notice that the abovenamed insolvent has applied at the Court for his discharge and that the Court has fixed the 31st day of August 1931, at 11 o'clock, for hearing the application.

Dated this 30th day of July 1931.

S. N. ROY, Sub-Judge.

(1660—1—1749)

NOTICE TO CREDITORS OF APPLICATION FOR DISCHARGE.

Section 41(*1*) of the Provincial Insolvency Act, V of 1920.

In the 4th Court of the Sub-Judge at Alipore.

INSOLVENCY CASE No. 371 OF 1930.

T. Pereira of 237, New Park Street, Calcutta, 24-Parganas, applicant.

TAKE notice that the abovenamed insolvent has applied at the Court for his discharge, and that the Court has fixed the 7th day of September 1931, at 11 o'clock, for hearing the application.

Dated this 1st day of August 1931.

S. N. ROY, Sub-Judge.

(1661—1—1750)

ORDER OF ADJUDICATION.

Section 27 of the Provincial Insolvency Act, V of 1920.

In the 4th Court of the Sub-Judge at Alipore.

INSOLVENCY APPLICATION No. 405 OF 1930.

PURSUANT to a petition, dated 25th November 1930, filed by Sudin Krishna Banerjee of Behala, 24-Parganas, debtor, and on the application of the debtor himself and on reading his application and hearing his pleader, it is ordered that the debtor be and the said debtor is hereby adjudged insolvent.

It is further ordered that the debtor do apply for his discharge within six months from this date.

Dated this 30th day of July 1931.

S. N. ROY, Sub-Judge.

(1662—1—1751)

ORDER OF ADJUDICATION.

Section 27 of the Provincial Insolvency Act, V of 1920.

In the 4th Court of the Sub-Judge at Alipore.

INSOLVENCY APPLICATION No. 155 OF 1931.

PURSUANT to a petition, dated 21st April 1931, filed by Shaik Abdul Mannaf of 33, Ahirapukur Road, Ballygunge, 24-Parganas, debtor, and on the application of the debtor himself and on reading the application and hearing his pleader, it is ordered that the debtor be and the said debtor is hereby adjudged insolvent.

It is further ordered that the debtor do apply for his discharge within six months from this date.

Dated this 30th day of July 1931.

S. N. Roy, Sub-Judge.

(1663—1—1752)

ORDER OF ADJUDICATION.

Section 27 of the Provincial Insolvency Act, V of 1920.

In the 4th Court of the Sub-Judge at Alipore.

INSOLVENCY APPLICATION No. 162 OF 1931.

PURSUANT to a petition, dated 24th April 1931, filed by Har Bans Mahato of 62-2, Charakdanga Road, Beliaghata, 24-Parganas, debtor, and on the application of the debtor himself and on reading his application and hearing his pleader, it is ordered that the debtor be and the said debtor is hereby adjudged insolvent.

It is further ordered that the debtor do apply for his discharge within six months from this date.

Dated this 30th day of July 1931.

S. N. Roy, Sub-Judge.

(1664—1—1753)

ORDER OF ADJUDICATION.

Section 27 of the Provincial Insolvency Act, V of 1920.

In the 4th Court of the Sub-Judge at Alipore.

INSOLVENCY APPLICATION No. 180 OF 1931.

PURSUANT to a petition, dated 7th May 1931, filed by Surendra Nath Bose of Titagarh, 24-Parganas, debtor, and on the application of the debtor himself and on reading his application and hearing his pleader, it is ordered that the debtor be and the said debtor is hereby adjudged insolvent.

It is further ordered that the debtor do apply for his discharge within six months from this date.

Dated this 30th day of July 1931.

S. N. Roy, Sub-Judge.

(1665—1—1754)

In the 4th Court of the Sub-Judge of 24-Parganas.

INSOLVENCY CASE No. 255 OF 1931.

Mrs. N. Lane, lady typist in the firm of Braithwaite & Co., at 6, Hide Road, Kidderpore, 24-Parganas, applicant.

To B. N. Addy of 8, Baburam Seal's Lane, Calcutta, and others, creditors.

ON the 3rd day of August 1931 it was ordered that the matter of the petition of the applicant be heard on the 14th day of September 1931 and that the said applicant do attend to be examined by this Court on that date.

S. N. Roy, Sub-Judge.

Alipore, the 5th August 1931. (1679—1—1756)

In the 4th Court of the Sub-Judge of 24-Parganas.

INSOLVENCY CASE No. 300 OF 1931.

Madan Lal Kedia of 288, Kalighat Road, 24-Parganas, applicant.

To Sriram Kundanmall of Prukh Kuthi, Harrison Road, Barabazar, Calcutta, and others, creditors.

ON the 5th day of August 1931 it was ordered that the matter of the petition of the applicant be heard on the 14th day of September 1931 and that the said applicant do attend to be examined by this Court on that date.

S. N. ROY, Sub-Judge.

Alipore, the 6th August 1931. (1680—1—1773)

In the 4th Court of the Sub-Judge of 24-Parganas.

INSOLVENCY CASE No. 302 OF 1931.

Bhimraj Dhanuka, 78A, Padmapukur Road, 24-Parganas, applicant.

To Binjraj Jaharmull, 201, Harrison Road, Calcutta, and others, creditors.

ON the 6th day of August 1931, it was ordered that the matter of the petition of the applicant be heard on the 14th day of September 1931 and that the said applicant do attend to be examined by this Court on that date.

S. N. ROY, Sub-Judge.

Alipore, the 7th August 1931. (1682—1—1757)

In the 4th Court of the Sub-Judge of 24-Parganas.

INSOLVENCY CASE No. 308 OF 1931.

Akheli Ahamad of Paharpur Road, Muchikhola, 24-Parganas, applicant.

To Serajaddin Khan of Rameswarpore, Garden Reach post-office, 24-Parganas, and others, creditors.

ON the 4th day of August 1931, it was ordered that the matter of the petition of the applicant be heard on the 14th day of September 1931, and that the said applicant do attend to be examined by this Court on that date.

S. N. ROY, Sub-Judge.

Alipore, the 5th August 1931. (1683—1—1758)

In the 4th Court of the Sub-Judge of 24-Parganas.

INSOLVENCY CASE No. 311 OF 1931.

Shaik Pirali of Ramnagore, Muchikhola, 24-Parganas applicant.

To Ganapat Marwari of Motiaburuz, Bangali Bazar, Garden Reach post office, 24-Parganas, and others, creditors.

ON the 3rd day of August 1931, it was ordered that the matter of the petition of the applicant be heard on the 7th day of September 1931 and that the said applicant do attend to be examined by this Court on that date.

S. N. Roy, Sub-Judge.

Alipore, the 5th August 1931. (1684—1—1759)

ORDER OF ADJUDICATION.

Section 27 of the Provincial Insolvency Act, V of 1920.

In the 4th Court of the Sub-Judge at Alipore.

INSOLVENCY APPLICATION No. 84 OF 1931.

PURSUANT to a petition, dated 24th February 1931, filed by Sarat Chandra Das of 4-3, Bhukailash Road, Kidderpore, 24-Parganas, debtor, and on the application of the debtor himself and on reading his application and hearing his pleader, it is ordered that the debtor be and the said debtor is hereby adjudged insolvent.

It is further ordered that the debtor do apply for his discharge within six months from this date.

Dated this 4th day of August 1931.

S. N. ROY, Sub-Judge.

(1685—1—1760)

ORDER OF ADJUDICATION.

Section 27 of the Provincial Insolvency Act, V of 1920.

In the 4th Court of the Sub-Judge at Alipore.

INSOLVENCY APPLICATION No. 97 of 1931.

PURSUANT to a petition, dated 5th March 1931, filed by Ramanath Mondal, of Keoratola, Joynagore, 24-Parganas, debtor, and on the application of the debtor himself and on reading his application and hearing his pleader, it is ordered that the debtor be and the said debtor is hereby adjudged insolvent.

It is further ordered that the debtor do apply for his discharge within six months from this date.

Dated this 4th day of August 1931.

S. N. Roy, Sub-Judge.

(1686—1—1761)

ORDER OF ADJUDICATION.

Section 27 of the Provincial Insolvency Act, V of 1920.

In the 4th Court of the Sub-Judge at Alipore.

INSOLVENCY APPLICATION No. 102 of 1931.

PURSUANT to a petition, dated 10th March 1931, filed by Surendra Nath Das of 1, Monoharpukur 2nd Lane, Tollygunge, 24-Parganas, debtor, and on the application of the debtor himself and on reading his application and hearing his pleader, it is ordered that the debtor be and the said debtor is hereby adjudged insolvent.

It is further ordered that the debtor do apply for his discharge within six months from this date.

Dated this 4th day of August 1931.

S. N. ROY, Sub-Judge.

(1687—1— 1762)

ORDER OF ADJUDICATION.

Section 27 of the Provincial Insolvency Act, V of 1920.

In the 4th Court of the Sub-Judge at Alipore.

INSOLVENCY APPLICATION No. 154 of 1931.

PURSUANT to a petition, dated 20th April 1931, filed by Srimotty Bhushan Bewa, widow of Netai Lal Chandra, of 54-3, Chingrighata Road, Entally, 24-Parganas, debtor, and on the application of the debtor herself and on reading her application and hearing her pleader, it is ordered that the debtor be and the said debtor is hereby adjudged insolvent.

It is further ordered that the debtor do apply for her discharge within six months from this date.

Dated this 4th day of August 1931.

S. N. Roy, Sub-Judge.

(1688—1—1763)

ORDER OF ADJUDICATION.

Section 27 of the Provincial Insolvency Act, V of 1920.

In the 4th Court of the Sub-Judge at Alipore.

INSOLVENCY APPLICATION No. 172 of 1931.

PURSUANT to a petition, dated 17th February 1931, filed by Jhagru Kurmi, of Ichchapore Government Sarkari Line, N'para, 24-Parganas, debtor, and on the application of the debtor himself and on reading his application and hearing his pleader, it is ordered that the debtor be and the said debtor is hereby adjudged insolvent.

It is further ordered that the debtor do apply for his discharge within six months from this date.

Dated this 4th day of August 1931.

S. N. Roy, Sub-Judge.

(1689—1—1764)

ORDER OF ADJUDICATION.

Section 27 of the Provincial Insolvency Act, V of 1920.

In the 4th Court of the Sub-Judge at Alipore.

INSOLVENCY APPLICATION No. 174 of 1931.

PURSUANT to a petition, dated 6th May 1931, filed by R. D'Sylva of 134, Loco Quarters, Chitpur, post office Belgachia, 24-Parganas, debtor, and on the application of the debtor himself and on reading his application and hearing his pleader, it is ordered that the debtor be and the said debtor is hereby adjudged insolvent.

It is further ordered that the debtor do apply for his discharge within six months from this date.

Dated this 4th day of August 1931.

S. N. Roy, Sub-Judge.

(1690—1—1765)

ORDER OF ADJUDICATION.

Section 27 of the Provincial Insolvency Act, V of 1920.

In the 4th Court of the Sub-Judge at Alipore.

INSOLVENCY APPLICATION No. 177 of 1931.

PURSUANT to a petition, dated 6th May 1931, filed by Edmond Royan Sampson of 206, Linton Street, Beniapukur, 24-Parganas, debtor, and on the application of the debtor himself and on reading his application and hearing his pleader, it is ordered that the debtor be and the said debtor is hereby adjudged insolvent.

It is further ordered that the debtor do apply for his discharge within six months from this date.

Dated this 6th day of August 1931.

S. N. Roy, Sub-Judge.

(1691—1—1766)

ORDER OF ADJUDICATION.

Section 27 of the Provincial Insolvency Act, V of 1920.

In the 4th Court of the Sub-Judge at Alipore.

INSOLVENCY APPLICATION No. 188 of 1931.

PURSUANT to a petition, dated 12th May 1931, filed by Mohammad Jan of Metiaburuz, 24-Parganas, debtor, and on the application of the debtor himself and on reading his application and hearing his pleader, it is ordered that the debtor be and the said debtor is hereby adjudged insolvent.

It is further ordered that the debtor do apply for his discharge within six months from this date.

Dated this 4th day of August 1931.

S. N. Roy, Sub-Judge.

(1692—1—1767)

ORDER OF ADJUDICATION.

Section 27 of the Provincial Insolvency Act, V of 1920.

In the 4th Court of the Sub-Judge at Alipore.

INSOLVENCY APPLICATION No. 196 of 1931.

PURSUANT to a petition, dated 18th May 1931, filed by Beharylal Ghorui of Bahirkunja, Budge Budge, 24-Parganas, debtor, and on the application of the debtor himself and on reading his application and hearing his pleader, it is ordered that the debtor be and the said debtor is hereby adjudged insolvent.

It is further ordered that the debtor do apply for his discharge within six months from this date.

Dated this 4th day of August 1931.

S. N. Roy, Sub-Judge.

(1693—1—1768)

In the Court of the District Judge of 24-Parganas.

INSOLVENCY CASE No. 40 OF 1931.

Sashibhushan Samanta of Banoswarpore, Falta, 24-Parganas, applicant.

To Hajari Mall Hiralal of 148, Cotton Street, Barabazar, Calcutta, and others, creditors.

ON the 6th day of August 1931 it was ordered that the matter of the petition of the applicant be heard on the 14th day of September 1931 and that the said applicant do attend to be examined by this Court on that date.

A. L. BLANK, District Judge.

Alipore, the 8th August 1931. (1676—1—1770)

In the Court of the District Judge of 24-Parganas.

INSOLVENCY CASE No. 41 OF 1931.

Rajani Kanta Ghosh of 76, Belgachia Road, 24-Parganas, applicant.

To Upendranath Mondul of 1-2, Bullav Street, Baghbazar, Calcutta, creditor.

ON the 7th day of August 1931, it was ordered that the matter of the petition of the applicant be heard on the 14th day of September 1931 and that the said applicant do attend to be examined by this Court on that date.

A. L. BLANK, District Judge.

Alipore, the 10th August 1931. (1699—1—1771)

NOTICE TO CREDITORS OF APPLICATION FOR DISCHARGE.

Section 41(*1*) of the Provincial Insolvency Act, V of 1920.

In the Court of the District Judge at Alipore.

INSOLVENCY CASE No. 36 OF 1930.

Mr. Khurshed Ali *alias* Mr. Ralph of 160, Lower Circular Road, 24-Parganas, applicant.

TAKE notice that the abovenamed insolvent has applied at the Court for his discharge, and that the Court has fixed the 14th day of September 1931, at 11 o'clock, for hearing the application.

Dated this 11th day of August 1931.

A. L. BLANK, District Judge.

(1700—1—1772)

ANIL CHANDRA DUTTA, M.A., B.L., intends to be enrolled as an Advocate of the Calcutta High Court.

(1544—4—1558)

HOLIRAM DEKA, M.A., B.L., intends to be enrolled as an Advocate of the High Court, Calcutta.

(1575—4—1594)

MR. PRAFULLA KUMAR RAY intends to be enrolled as an Advocate of the Calcutta High Court.

(1583—4—1597)

MR SUKUMAR SEN GUPTA, B.L., intends to be enrolled as an Advocate of the Calcutta High Court.

(1587—4—1610)

MR. CHANDRA SEKHAR BHAWMICK, B.L., intends to be enrolled as an Advocate of the Calcutta High Court.

(1588—4—1609)

MR. UPENDRA NATH PAL, B.L., intends to be enrolled as an Advocate of the Calcutta High Court.

(1631—4—1611

MR. ABINASH CHANDRA ADHIKARY, M.A., B.L., intends to be enrolled as an Advocate, High Court.

(1695—4—1724)

MR. TARAPADA MUKHERJI, M.A., B.L., intends to be enrolled as an Advocate of the Calcutta High Court.

(1728—4—1769)

MR. SHYAMAPADA MAJUMDAR, M.A., B.L., intends to be enrolled as an Advocate of the Calcutta High Court.

(1702—4—1790)

RAJENDRA NARAYAN ROY, M.A., B.L., intends to be enrolled as an Advocate of the Calcutta High Court.

(1568—1—1612)

THE Bengal and Madras Service Family Pension Fund which is provisionally managed and assisted by Government has for its object the provision of monthly pensions for the maintenance of the widows and children of subscribers and is open, with certain exceptions, to all active and pensioned members of the Uncovenanted service of Government (except those serving under the Government of Bombay), and to Local Fund servants earning pensions from Government. Some of the special features of the fund are—(1) that widowed daughters incapable of remarriage or children labouring under such mental or bodily infirmities as incapacitate them from earning their livelihood or preclude the possibility of marriage (in caseof a daughter) are admitted to its benefits; and (2) that subscribers to the Widows' and Daughters' branches are entitled to a refund of 30 per cent. of the premia paid, should the nominee pre decease them after five years of admission. The second quinquennial valuation of the Fund has been completed by the actuary to the Government of India, and his report discloses very favourable results. For forms of application and rules of the Fund apply to the Accountant-General, Bengal, Imperial Secretariat Buildings, Calcutta.

Sale Notice.

(Under section 88, Sea Customs Act, Act VIII of 1878.)

TO be sold by public auction in the Custom House on Friday, the 28th August 1931, at 2 p.m.—

(1) 36 bottles remnants of liquors.
(2) 16 bottles remnants of liquors.
(3) 108 bottles remnants of oils and medicines.
(4) One lot of empty cigarette tins.
(5) One bag empty bottles.
(6) One case pepticol samples (medicines free from spirits). One tailoring establishment account.
(7) 5 cases M. C. G. S. Alcoholic Compound, *ex-ss.* "City of Baroda".
(8) Seven *thans* khaki flannel, two pairs tailor's shears, one square, penknife, soap, tape measures, wooden rules, marking ink, metal pant buttons and cotton thread.

Inspection of the above articles may be obtained on applying to the Inspector in charge of the Custom House.

M. SLADE, Collector of Customs (offg.).

Calcutta Custom House, the 12th August 1931.

(1711—2)

Notice to creditors under section 10 (A) of Act IX (B. C.) of 1879.

WHEREAS under sections 7 and 35 of the Court of Wards Act IX (B.C.) of 1879 as amended up to date, the Court of Wards has assumed charge of the property known as "A—unsettled" fund of Nawab K. Habibullah of Dacca, whose ancestral estate is already under the management of the Court of Wards, under section 13A of Act IX (B.C.) of 1879, and who has been declared a disqualified proprietor for the purpose of managing his said property known as "A—unsettled" fund on his own application under clause (*c*) of section 6 of the Bengal Court of Wards Act IX (B.C.) of 1879 as amended by the Bengal Decentralization Act, 1915 (Bengal Act V of 1915), by its order No. 378 W.-T., dated the 7th April 1931.

Notice is hereby given under section 10(A) of the said Act that all creditors having claims against the said estate or his immovable property, are hereby required to submit the same in writing to the undersigned at his office at Dacca within six months from the date of the publication of this notice.

Creditors are also hereby warned that claims not submitted as required by this notice, are liable to be deemed to have been duly discharged.

A. CASSELLS, Commissioner,
Dacca Division (offg.)

Dacca, the 10th August 1931. (1724—3)

Notice under section 10A of Act IX (B.C.) of 1879.

WHEREAS under sections 6 (*b*) and 35 of the Court of Wards Act IX (B.C.) of 1879, as amended up to date, the Court of Wards has assumed charge of the property of Babu Satyendra Narayan Mullick, minor son of late Babu Jatindra Narayan Mullick of the Haripur Estate (Chhotataraf).

Notice is hereby given under section 10A of the said Act that all creditors having claims against the said proprietor or his immovable property are hereby required to submit the same in writing to the Collector of Dinajpur within six months from the date of publication of this notice.

Creditors are also hereby warned that claims not submitted as required by this notice are liable to be deemed to have been duly discharged.

L. C. GUHA, Collector.

Dinajpur, the 19th August 1931. (1760—1)

Notice to Creditors.

Estate Charles Henry Goodwin Norman, deceased.

PURSUANT to section 360 of Act XXXIX of 1925 and section 42 of Act XXVIII of 1866, the creditors and all persons interested in the estate of Charles Henry Goodwin Norman, late of "Norwood," Northumberland Road, New Barnet, in the County of Hertford, England, who died at that address on the 21st March 1931, and Letters of Administration to whose estate were granted by the High Court, Calcutta, on the 27th July 1931 are hereby required to submit particulars of their claims to the undersigned on or before the 28th September 1931, after which date the Administrator will distribute the assets having regard only to the claims of which notice shall then have been received.

ORR, DIGNAM & Co.,
Solicitors to the Administrator abovenamed.

32, Dalhousie Square, South, Calcutta, 13th August 1931. (1710—1—1755)

Currency Notes.

PORTIONS of the following Currency Notes of the Calcutta Circle of issue are stated to have been destroyed and payment of their value has been claimed by the persons whose names are shown against the numbers.

Any other person claiming a right to them is warned to communicate at once with the undersigned.

Registered No.	Note No.	Value. Rs.	Name and address of the claimant.
W.D. 10 of 31-32.	S-44,608901	100	Murlimull Radhakishan, Sudder Bazar, Ambala.
	S-52,182632	100	
	S-52,217779	100	
	S-52,308738	100	
	S-52,310080	100	
	S-52,308739	100	

B. C. DUTT, Currency Officer.

Currency Office, Calcutta, the 7th August 1931.

Lost.

THE Government Promissory Notes Nos. 223555 and 314535 of the 3½ per cent. loans of 1854-55 and 1900-01, respectively, for Rs. 1,000 each, originally standing in the name of Sreemati Saralabala Devi, the proprietress, by whom they were never endorsed to any other person, having been lost, notice is hereby given that payment of the above notes and the interest thereupon have been stopped at the Public Debt Office, Imperial Bank of India, Calcutta, and that application is about to be made for the issue of duplicates in favour of the proprietress. The public are cautioned against purchasing or otherwise dealing with the abovementioned securities.

Name of the Proprietress—Saralabala Devi.

Address—C-o Sarat Chandra Mookherji, pleader, 63, Srigopal Mullick Lane, Bowbazar, Calcutta.

(1671—3—1738)

In the matter of the Indian Companies Act, VII of 1913, and

In the matter of the Village Loan Co., Ltd. (In liquidation).

NOTICE is hereby given that at an extraordinary general meeting of shareholders of the abovenamed Company held at 3 p.m., on Saturday, the 15th August 1931, at the registered office of the Company an extraordinary resolution was passed to the effect that the Company be wound up voluntarily under supervision of the Court as it was unable to pay its debts and that the undersigned was appointed liquidator.

SHIB KRISHNA CHATTERJEE, Liquidator.

Calcutta, the 18th August 1931. (1755—1—1783)

Imperial Library.

(Secretariat Buildings, 6, Esplanade East, Calcutta.)
Open on—

Weekdays and Saturdays from 10 A.M. to 7 P.M.
Sundays and Gazetted holidays from 2 P.M. to 5 P.M.

THE Imperial Library is also a Lending Library. It is free to all except children. There is no subscription to pay.

K. M. ASADULLAH, Librarian.

CINCHONA FACTORY PRODUCTS.

By order of the Government of Bengal Cinchona Factory Products as manufactured and packed at the Cinchona Factory, Mungpoo, Darjeeling district, will be sold and distributed by the Superintendent of the **Presidency Jail,** *in original packages* as received from the Mungpoo Factory, at the rates herein noted **from the 1st May 1926 :—**

Quinine Sulphate.

For 60 lbs. and upwards at a time .. Rs. 18 per lb.
For 6 lbs. and over but less than 60 lbs. at a time .. .. .. „ 19 „
For any quantity less than 6 lbs. .. „ 20 „

Quinine Hydrochloride.

For 60 lbs. and upwards at a time .. Rs. 23 per lb.
For 6 lbs. and over but less than 60 lbs. at a time .. .. .. „ 24 „
For any quantity less than 6 lbs. .. „ 25 „

Quinine Di-Hydrochloride.

For 60 lbs. and upwards at a time .. Rs. 25 per lb.
For 6 lbs. and over but less than 60 lbs. at a time .. .. .. „ 26 „
For any quantity less than 6 lbs. .. „ 27 „

Quinidine Sulphate.

For 60 lbs. and upwards at a time .. Rs. 20 per lb.
For 6 lbs. and over but less than 60 lbs. at a time .. .. .. „ 21 „
For any quantity less than 6 lbs. .. „ 22 „

Cinchonidine Sulphate.

For 60 lbs. and upwards at a time .. Rs. 25 per lb.
For 6 lbs. and over but less than 60 lbs. at a time .. .. .. „ 26 „
For any quantity less than 6 lbs. .. „ 27 „

Cinchonine Sulphate.

For 60 lbs. and upwards at a time .. Rs. 12 per lb.
For 6 lbs. and over but less than 60 lbs. at a time .. .. .. „ 13 „
For any quantity less than 6 lbs. .. „ 14 „

Cinchona Febrifuge (Powder).

For 60 lbs. and upwards at a time .. Rs. 9 per lb.
For 6 lbs. and over but less than 60 lbs. at a time .. .. .. „ 9 „
For any quantity less than 6 lbs. .. „ 10 „

Cinchona Febrifuge (Tablets).

For 60 lbs. and upwards at a time .. Rs. 10 per lb.
For 6 lbs. and over but less than 60 lbs. at a time .. .. .. „ 10 „
For any quantity less than 6 lbs. .. „ 11 „

Quinoidine (Tablets).

For 60 lbs. and upwards at a time .. Rs. 5 per lb.
For 6 lbs. and over but less than 60 lbs. at a time .. .. .. „ 5 „
For any quantity less than 6 lbs. .. „ 6 „

Quinoidine (in Mass).

For 60 lbs. and upwards at a time .. Rs. 4 per lb.
For 6 lbs. and over but less than 60 lbs. at a time .. .. .. „ 4 „
For any quantity less than 6 lbs. .. „ 5 „

Cinchona Bark (in 50 pound original bags).

Per bag .. .. .. Rs 25.

Quinine Tablets — per box of 200 tablets each. Rs. 2-8 (Bengal) Rs. 3 (outside Bengal).

Rs. 15-8-0 per lb.

Transit charges extra in every case

Quinine Sulphate is for sale to Government Institutions and Missionaries only. It is not for sale to Private Firms or the General Public.

Cinchona Febrifuge in Powder and Tablet form (when in stock) is for sale to Government Institutions, Missionaries and the General Public.

Quinine Sulphate will be supplied to Hospitals and Dispensaries of this Presidency only at the wholesale rate of Rs. 18 per lb., irrespective of quantities. For all other purchasers the rates given above will apply.

Five and ten boxes of Quinine Tablets are sold to the public at the concession rates which will be intimated on application.

Provinces other than Bengal, Bihar and Orissa and Assam will get their supplies of Sulph. Quinine from the Director, Botanical Survey of India, Sibpur, Howrah.

Local sale at the jail gate from 10 to 12 noon.

The system of payment is by—*Cash in advance*—by "*Treasury Challans*," which should accompany the order or indent.

In cases where this is not possible, payment should be made by "*Remittance Transfer Receipts*" or crossed "*Cheques.*"

Indents unaccompanied by cash in advance will be sent Value Payable Post. Credit sale is not allowed except under special circumstances.

In the case of *Government officers* payments will be recovered by *Book Transfer, i.e., Countersigned Invoices*, in the event of *Cash* not accompanying the indent by "*Treasury Challans*," *Remittance Transfer Receipt* or *Cheque*

2. Price and postage must accompany the price of the drug (when the drug is required by post).

The name of the Railway and Steamer Station or Post Office must be written distinctly when the parcels are required by Rail, Steamer or by Post. Railway parcels are sent by passenger train only.

A scale of postage is given below.

	1 oz.	2 oz.	4 ozs.	½ lb.	¾ lb.	1 lb.
	As.	As.	As.	As.	As.	Rs A
Quinine Sulph. ..	..	..	6	6	10	0 10
Cinchona Feb. ..	..	..	6	6	10	0 10
Cinchona Feb Tablets	..	..	6	6	10	0 10
Quinoidine Tablets ..	..	..	..	..	..	1 2
Quinine Hydrochlor. ..	4	4	6	6	..	0 10
Quinine Di-hydrochlor.	4	4	6	6	..	0 10
Quinine Tablets ..	..	..	6	6	10	0 10

	1½ lb.	2 lb.	3 lb.	4 lb.	5 lb	6 lb.
	Rs A.	Rs. A.	Rs. A	Rs. A	Rs. A	Rs. A.
Quinine Sulph. ..	0 14	1 2	1 6	1 14	2 6	2 14
Cinchona Feb. ..	0 14	9 14	1 6	1 10	1 14	2 6
Cinchona Feb Tablets	1 2	1 2	1 10	1 14	2 6	2 14
Quinoidi e Tablets ..	..	2 2	3 2	..	..	..
Quinine Hydrochlor. ..	1 0	0 14	1 6	1 10	..	..
Quinine Di-hydrochlor.	1 0	1 2	1 12	2 4	..	..
Quinine Tablets ..	0 14	0 14	1 6	1 10	1 14	2 2

Two different drugs are not packed in the same parcel and postage must be paid separately for each kind.

N.B.—Postage stamps are not accepted as te

Government reserve the right to alter the price without notice.

GOVERNMENT PUBLICATIONS FOR SALE

At the Bengal Secretariat Book Depôt, Writers' Buildings, Calcutta, and by the following Agents :—

Agents in India.

Messrs. S. K. Lahiri & Co., Printers and Book-sellers, College Street, Calcutta.

Messrs. Thacker, Spink & Co., Calcutta.

Customers in the United Kingdom and the Continent of Europe may obtain the publications either direct from the High Commissioner's Office or through any book-seller.

NOTICE.—Books required for private use can be purchased. Applications should be accompanied by remittance in each case.

All remittances on account of subscriptions to or prices of Gazettes, Indian Law Reports or other Government publications available for sale at the Bengal Secretariat Book Depôt, or for cost of advertisements published in the Gazette, should be made payable to the "Treasurer, Bengal Secretariat, Calcutta." Advices of such remittances, if separately sent, should be addressed to the "Accountant, Bengal Secretariat." All advertisements intended for publication in the *Calcutta Gazette* should be sent direct to the Superintendent, Government Printing, Bengal, Alipore, 24-Parganas.

Books required for the Public Service should be obtained through the Heads of Departments.

NEW PUBLICATIONS ISSUED DURING THE CURRENT QUARTER.

Acts, Bills and Legislative Council Proceedings.

Bengal Act VII of 1930 (Bengal Rural Primary Education Act) in Bengali, Re. 1-13 (1a.).

Bengal Act VI of 1919 (Bengal Food Adulteration Act) as modified up to 1st July 1931. As. 3 (1a.).

Miscellaneous Publications.

Administration. Report of the—of Bengal, 1929-30. Rs. 4-12 (7a.).

Annual—Reports for Establishment, Buildings, Railways and Communications, 1929-30. Re. 1-7 (1a.).

Bulletin. No. 50. Investigation of the Oil of Kusum and its application in Soap-making, by Dr. R. L. Datta. As. 3 (1a.).

College. Annual Report on the working of the Carmichael Medical , Belgachia, Calcutta, 1929-30. As. 8 (1a.).

Dispensaries. Annual Report on the working of Hospitals and—under the Government of Bengal, 1929. Rs. 2 (4a.).

Forest. Annual Report on—Administration in the Presidency of Bengal, 1929-30. Rs 4-8 (3a.).

History. Of the Birbhum Zilla School, 1931. Rs. 10 (1a.).

Of the Hooghly College, 1931. As. 12 (1a.).

Of the Hooghly Collegiate School, 1931. As. 9 (1a.).

Of the Bankura Zilla School, 1931. Re. 1 (1a.).

List. Of High Schools and Colleges in Bengal corrected up to 31st December 1930. As. 13 (1½a.).

Of members of the Bengal Legislative Council, etc., 9th list, dated the 6th July 1931. As. 5 (1a.).

Quarterly Civil—for Bengal corrected up to 1st July 1931. Rs. 3-8 (11a.).

Pharmacopœia and Diet Scales of the Presidency General Hospital, Calcutta, 1930 Re. 1 (2a.).

Services. History of—of gazetted and other officers corrected up to 1st July 1931, Part I. Rs. 15 (Re. 1-4a.)

Part II. Rs. 12 (Re. 1-2a.).

Survey. Annual Report on the and Settlement Operations in Bengal, 1929-30. Rs. 0-12 (6a.).

Wakf. Rules framed under section 11 of the Musalman —Act, 1923, published 1931. As. 9 (1a.).

PUBLICATIONS ISSUED BETWEEN 1st JANUARY AND 30th JUNE 1931.

Acts, Bills and Legislative Council Proceedings.

Proceedings of the Bengal Legislative Council.

For the meetings held on the 9th to 13th, 16th to 18th February 1931. Vol. XXXVI, No. 1. Rs. 3-5 (8a.).

For the meetings held on the 23rd February and 2nd and 3rd March 1931. Vol. XXXVI, No. 2. Re. 1-4 (3a.).

For the meetings held on the 16th to 21st, 23rd to 28th and 30th March 1931. Vol. XXXVI, No. 3. Rs. 4-2 (12a.).

Bengal Act I of 1931 (Bengal Embankment Amendment Act). A.1 (6p.).

Bengal Act II of 1931 (Bengal Municipal Amendment Act). A.1 (6p.).

Bengal Act II of 1882 (Bengal Embankment Act), as modified up to 15th June 1930. Re. 1-2 (2a.).

Bengal Criminal Law Amendment Act, 1925, as modified up to 1st December 1930. As. 3 (1a.).

Bengal Act VII of 1930 (Bengal Rural Primary Education Act). As. 2 (1½a.).

Miscellaneous Publications.

Accounts. Question Papers of the Divisional—Examination, 1931. A.1 (1a.).

Agriculture. Annual Report of the Department of—, Bengal, 1929-30. Rs. 4-5 (4a.).

Budget. Civil—Estimate for the year 1931-32. Rs. 2 (9a.).

Public Works Department—Estimate of Provincial Civil Works in Bengal Presidency, 1931-32. Rs. 2 (3a.).

Public Works Department—Estimate of 60—Civil Works not charged to Revenue in Bengal Presidency, 1931-32. As. 8 (1a.).

Census. Report on the Cattle—of the Bengal Presidency, 1930. Rs. 3-10 (3a.).

Chronological Tables for 1931. As. 2 (1a.).

Cinchona. Sixty-eighth Annual Report of the Government—Plantations and Factory in Bengal, 1929-30. As. 9 (1a.).

Clerkship. Question Papers for—Examination for 1930. As. 8 (1a.).

Dispensaries. Triennial Report on the working of the Hospitals and—under the Government of Bengal, 1926 to 1928. Rs. 2-8 (5a.).

Education. Bengal—Code, 1931. Rs. 4-6 (11a.).

Excise. Report on the Administration of—Department in Bengal, 1929-30. Rs. 6-12 (5a.).

Health. Bengal Public—Report for 1929. Re. 1 (6a.).

Hints. Safety First—, 1931. A. 1 (1a.).

Industries. Annual Administration Report of the Department of—, Bengal, 1929-30. Re. 1-13 (3a.).

Instruction. Report on Public—in Bengal, 1929-30. Rs. 1-8 (3a.).

Irrigation Department. Classified List and Distribution Return of Establishment of the—corrected up to 1st January 1931. Rs. 3-4 (2a.).

Justice. Report on the Administration of Criminal—in the Presidency of Bengal, 1929. Re. 1-1 (2a.).

Report on the Administration of Civil—in the Presidency of Bengal, 1929. As. 12 (2a.).

Report on the Administration of Criminal—in the Province of Assam, 1929. Rs. 2 (1¼a.).

Report on the Administration of Civil—in the Province of Assam, 1929. Rs. 2-4 (1a.).

Kanungos. Half-yearly Gradation List of Settlement—corrected up to November 1930. Rs. 2 (1¼a.).

Land Revenue. Report on the—Administration of the Bengal Presidency, 1929-30. Rs. 5-2 (6a.).

List. Of Members of the Bengal Legislative Council, etc. 8th List, dated 21st January 1931. As. 5 (1a.).

Bengal Quarterly Civil—, corrected up to 1st January 1931. Rs. 3-8 (11a.).

Mill workers. Report on an Enquiry into the standard of living of Jute—in Bengal by Dr. A. C. Roy Chaudhury. Published 1930. Rs. 2 (2a.).

Mines. Guzrati Translation of the Bye-laws for Coal—in pamphlet form. As. 6 (1a.).

Rules framed by the Government of Bengal under section 30 of the Indian—Act, 1923 (IV of 1923), applicable to Coal—and—other than Coal—in pamphlet form, corrected up to 31st March 1931. As. 3 (1a.).

Motor Traffic. Report of the Committee appointed into matters connected with—on the Darjeeling Hill Cart Road, 1930. As. 7 (1a.).

Public Instruction. Supplement to the Report on—in Bengal, 1928-29. As. 12 (3a.).

Schedule of rates of the Eastern Circle, corrected up to 1st April 1930. Rs. 7-9 (5a.).

Statistics. Agricultural—of Bengal, 1929-30. Re. 1-2 (2a.).

Trade Unions. Report on the working of the Indian—Act (XIV of 1926), in Bengal for the year ending 31st March 1930. Re. 1-8 (1a.).

Veterinary. Annual Reports of the Civil—Department and Bengal—College, Calcutta, 1929-30. Re. 1-4 (2a.).

[27-8-1931]

Registered No. C207 *No. 35 of 1931*

The Calcutta Gazette

THURSDAY, AUGUST 27, 1931.

CONTENTS:

	PAGE.
Statement under the Cotton Ginning and Pressing Factories Act, 1925 ..	1079
Daily rainfall recorded in Bengal for the month of July 1931	1080—1095
Abstract statement showing traffic and tollage on Canals in Bengal classed as Major and Minor Works and Navigation for the month of May 1931 ..	1096
Statements of weekly gauge readings of certain rivers in Bengal	1097—1098
Weather and Crop Report for the week ending 19th August 1931	1099—1102
Prices-current (wholesale) of certain articles in the Calcutta Mart and (retail) of common rice and salt in the districts of Bengal for the first-half of August 1931	1103—1106
Statement showing the daily gauge-readings of certain rivers for the week ending 13th August 1931	1107—1113
Calcutta Improvement Trust Notice ...	1114
Annual report on the working of the Survey Departments, Bengal, under the Inland Steam Vessels Act, I of 1917, for the year 1930-31	1115—1116

Supplement.

Official Papers.

FORM C—BENGAL.

STATEMENT OF COTTON PRESSED IN THE BENGAL PRESIDENCY FOR THE WEEK ENDING 14th AUGUST 1931.

[Section 5(2) of the Cotton Ginning and Pressing Factories Act, 1925.]

Name of Division or block.	Number of bales pressed.				District included in the block.
	During the week.	During the corresponding week, last year.	Since 1st September 1930 (the date prescribed by the Local Government as the commencement of the season).	During the corresponding period, last year.	
The Bengal Presidency	484 or 480·28 bales of 400 lbs. each.	441	34,095	32,979	All districts in the Presidency.

J. B. McBRIDE,

Chief Inspector of Factories, Bengal (offg.).

DAILY RAINFALL RECORDED IN BENGAL

NOTE.—The total and the average rainfall for all districts have been

Division and district.	Station.	1	2	3	4	5	6	7
PRESIDENCY.								
24-Parganas ..	Saugor Island (Observatory) ..	2·86	6·24	2·92	2·51	0·44	0·29	..
	Diamond Harbour ..	1·45	2·12	1·25	0·82	0·12	0·09	0·43
	Budge-Budge	0·10	2·96	1·27	0·47	0·56	0·03	0·05
	Canning Town	0·94	2·50	1·13	1·20	..	..	0·21
	Alipore (Observatory) ..	0·30	3·04	0·65	0·93	0·28	0·01	0·05
	Barrackpore	0·20	1·44	0·48	0·31	1·20	..	2·38
	Dum-Dum	3·16	1·06	0·16	0·72	..	..	3·72
	Barasat	..	..	..	..	..	2·00	1·15
	Basirhat	0·42	1·10	0·35	0·98	0·10	..	0·08
	Gosaba*							
Nadia ..	Ranaghat	..	0·28	..	0·76	0·50	..	0·18
	Krishnagar (Observatory) ..	0·11	0·52	0·16	0·38	..	0·42	0·18
	Chuadanga	0·06	0·04	0·47	0·70	0·90	0·10	0·16
	Meherpore	1·15	0·46	1·27	0·15	1·05	..	1·02
	Kushtia	..	0·55	0·28	0·22	0·40	..	..
	Haringhata	0·54	0·16	..	0·91	..	0·32	0·94
Murshidabad ..	Kandi	..	0·36	0·71	0·42	..	..	..
	Berhampore (Observatory) ..	0·03	0·38	0·24	0·21	0·03	0·56	..
	Lalbagh	0·50	0·44	0·60	0·10	..	..	1·36
	Azimganj	..	0·16	0·50	..	..	0·50	0·87
	Jangipur	..	0·01	0·32	0·39	0·14	..	0·87
	Lalgola	0·15	0·43	0·67	0·20	..	0·37	0·56
	Akriganj	0·28	0·34	0·08	0·02	0·55	1·86	0·77
	Patkabari	1·03	0·70	0·41	0·17	0·31	..	0·81
	Dumkal	..	0·35	0·19	0·24	..	0·07	..
	Kallyanganj (Ishanpur) ..	..	0·37	0·53	0·32	0·17	0·14	1·34
	Khargram	..	0·34	1·10	0·20	..	..	..
	Bharatpur	1·00	..	..	..	..	..	..
Jessore ..	Narail	0·15	0·90	1·10	0·05	0·90	..	0·25
	Jessore (Observatory) ..	0·87	0·50	0·43	0·16	0·30	..	1·45
	Jhenida	0·21	0·80	0·50	0·05	0·43	0·10	0·49
	Magura	..	0·75	0·60	0·20	0·15	0·30	..
	Bongaon	0·02	0·08	0·38	0·03	0·38	..	..
Khulna ..	Satkhira (Observatory) ..	0·10	1·26	1·40	1·87	0·60	0·12	0·15
	Bagerhat	..	..	..	..	1·22	0·24	0·82
	Khulna (Observatory) ..	0·68	0·47	2·14	1·44	0·18	0·02	0·77
	Kaliganj	..	..	..	..	..	..	0·22
	Nakipur	..	0·50	0·80	1·10	2·80	0·20	0·10
	Dumuria	0·26	1·97	0·21	0·59	..	0·92	0·25
	Rainpal	0·41	0·74	1·00	1·43	..	0·42	..
	Kalaroa	0·30	2·40	2·33	0·75	..	..	..
	Paikgachha (Baruli) ..	1·25	2·70	..	..	..	2·50	0·66
	Mollahat	0·14	0·64	0·83	..	0·22	0·14	..
	Morelganj	0·39	1·79	1·50	0·75	0·04	..	..
	Ismailkati	..	1·21	2·72	0·11	..	..	0·79
BURDWAN.								
Burdwan ..	Kalna	0·52	..	1·72	1·87	..	..	2·58
	Burdwan (Observatory) ..	0·18	0·66	0·49	0·34	2·18	..	..
	Katwa	0·19	0·92	0·70	0·30	..	..	..
	Asansol (Observatory) ..	0·06	6·60	0·50	1·66	0·50	0·11	..
	Mankar	..	5·11	0·51	1·39	..	..	0·49
	Mangalkot*							
	Royna*							
	Monteswar	0·33	0·11	0·39	1·33	0·22	0·11	0·20
Birbhum ..	Suri	0·03	0·41	2·24	0·68	..	..	0·46
	Hetampur	..	1·18	1·02	0·76	0·10	..	..
	Rampurhat	0·38	0·45	0·67	0·10	..	1·80	0·50
	Bolpur	0·09	0·35	0·29	1·00	..	..	..
	Murarai	0·05	0·63	0·25	0·15	..	1·29	1·27
	Labpur	..	0·36	2·56	0·01	..	..	.

* Not reported.

FOR THE MONTH OF JULY 1931.

calculated, using the data of only those stations for which normals are available.

8	9	10	11	12	13	14	15	16	17	18	19	20
0·01	..	1·40	0·01	0·08	0·21	0·97	1·65	..	1·35	0·27	0·19	0·35
2·63	1·28	..	..	0·11	0·12	0·06	..	0·12	3·90	..	0·06	0·45
5·13	0·07	1·94	0·06	3·18	0·08	..	0·16	0·48	0·15	..	0·16	0·05
0·61	1·50	0·08	..	..	0·22	0·24	..	0·15	1·15	0·85	0·05	0·17
3·12	0·01	1·38	..	..	0·86	0·49	0·01	0·37	0·41	0·22	0·01	0·18
1·66	..	0·82	..	..	0·86	0·45	..	0·03	0·40	0·04	..	..
..	0·32	..	..	1·82	3·07	0·21	0·11	0·30	0·13	..	0·11	0·62
3·00	..	..	..	..	2·25	1·25	0·20	0·15	..	0·90	..	..
3·50	3·68	0·22	..	..	0·71	0·78	0·09	0·34	0·57	0·84	0·38	1·49
0·50	0·32	..	1·50	..	..	0·08	..	..	1·60	..	..	..
0·86	0·18	..	..	0·93	..	..	0·14	..	3·29	0·26	0·64	1·54
0·12	0·11	..	0·10	..	..	0·35	0·40	0·19	1·52	0·46	0·14	0·04
..	..	0·46	..	..	0·07	0·40	..	1·45	0·10	..	0·15	0·34
0·70	..	0·40	..	..	..	0·32	..	1·54	1·35	0·24	..	1·50
0·11	0·10	..	..	0·87	0·04	0·16	..	..	0·38	..	0·56	0·06
0·53	0·10	..	..	0·61	..	0·16	..	..	0·55	0·49	..	..
2·60	..	..	0·73	0·10	..	..	0·32	0·85	0·12	..	..	..
0·04	..	1·59	1·28	..	0·18	0·10	0·33	..	..	0·20	..	0·36
..	0·04	0·29	0·84	..	0·12	0·13	0·30	0·24	..	..	0·80	3·13
0·31	..	0·03	0·03	..	0·94	0·21	0·12	0·15	0·22	0·03	..	0·38
..	..	..	..	..	0·19	0·04	..	0·79	0·21	..	..	..
..	..	..	0·07	..	0·19	..	..	1·88	..	..	..	1·04
..	..	0·48	..	..	..	0·37	0·07	0·95	..	..	0·47	1·98
5·55	..	..	0·97	1·64	0·06	0·05	0·04	..	1·32	0·07	..	..
1·07	..	0·04	0·33	0·10	0·07	0·31	..	0·06	0·38	0·07	..	1·32
..	..	..	..	0·70	0·10	0·08	0·50	..	..	..	..	..
..	..	..	..	..	0·20	..	..	..	..	2·50	..	2·20
1·20	2·50	1·15	..	..	..	..	0·50	1·20	0·90	..	..	..
0·10	0·22	..	..	0·03	1·70	0·30	0·40	0·05	1·57	0·64	0·34	..
0·85	..	..	..	..	..	..	0·29	0·45	1·17	0·33	0·05	0·50
..	0·11	..	0·74	0·95	1·15	..	..	..	0·35	..	2·95	0·25
0·36	..	..	..	..	0·20	0·28	0·17	0·58	1·03	..	0·63	0·35
2·05	0·48	0·10	..	..	1·95	1·07	0·05	0·04	0·96	0·09	0·14	0·53
1·40	..	0·31	0·52	..	0·26	0·62	..		0·56	0·42	1·24	1·50
0·40	0·42	0·30	..	0·11	0·10	1·17	0·40	0·24	1·35	0·11	1·52	0·02
1·65	0·73	..	..	..	0·28	0·60	..	0·05	1·21	1·57	..	..
1·50	..	..	..	0·50	..	..	..	..	..	0·80	..	..
0·19	0·16	..	..	..	0·98	..	0·11	1·12	0·28	1·62	0·06	0·25
2·10	0·85	..	0·10	6·27	..	0·60	0·10	0·97	0·50	0·68	0·10	0·12
1·56	0·68	..	..	..	0·94	0·75	1·56	..	0·43	..	2·21	0·27
..	..	..	..	..	..	0·50	..	..	1·85	..	..	..
0·39	0·75	..	0·25	0·14	0·15	0·74	0·24	3·11	0·42	..	1·05	..
0·85	0·02	0·40	..	..	..	..	0·61	4·12	0·30	0·10	2·49	1·05
1·07	0·07	..	..	..	0·41	1·51	..	0·41	1·10	0·20	1·02	0·43
0·40	..	..	..	..	0·72	..	1·62	..	..	..	..	0·44
0·28	..	0·22	..	..	0·07	0·40	0·09	0·02	0·36	0·17	..	..
1·41	0·20	..	..	0·52	..	..	0·30	1·58	..	0·27	..	..
0·33	0·16	0·23	0·08	2·20	0·02	0·15	0·17	0·05	1·06	0·31	0·02	..
0·31	..	0·15	..	..	..	..	..	..	..	..	..	..
0·05	..	..	0·18	0·69	..	0·47	0·09	0·81	..	..	0·29	0·03
0·65	0·90	0·29	..	2·34	0·04	..	0·26	0·04	0·62	0·70	..	..
0·35	0·22	..	..	2·20	0·35	..	0·10	0·52	2·72	0·14	..	..
0·02	..	..	0·29	0·08	0·23	0·30	0·65	0·04	0·48	..	..	0·44
0·40	0·49	0·01	0·16	1·85	0·22	..	0·57	1·54	0·67	..	..	..
..	..	0·74	..	..	..	0·10	0·05	0·03	0·82	..	0·45	0·32
0·24	0·68	..	..	0·70	..	0·42	..	1·38	0·14	0·79	..	..

DAILY RAINFALL RECORDED IN BENGAL

Division and district.	Station.	21	22	23	24	25	26	27
PRESIDENCY.								
24-Parganas ..	Saugor Island (Observatory) ..	1·40	2·02	0·85	0·61	0 11	0·09	..
	Diamond Harbour ..	0·75	0·15	0·39	..	..	..	0·09
	Budge-Budge	1·45	1·22	..	0·06	..	..	..
	Canning Town	0·46	1·77	0·15	..	0·21	..	..
	Alipore (Observatory) ..	0·06	0·63	0·12	..	0·02	..	0·01
	Barrackpore	..	1 30	..	..	0·25	..	..
	Dum-Dum	..	..	..	..	..	..	0·14
	Baraset	0·20	..	0·80	0·25	0·12	0·30	..
	Basirhat ..	0·53	0·96	0·28	..	..	0·06	..
	Gosaba*							
Nadia	Ranaghat	1·00	0·92	0·34	..	0·30	0·20	..
	Krishnagar (Observatory) ..	0·22	0·11	..	0·40	0·16	0·14	..
	Chuadanga	0·42	0·45	1·68	0.06	0·14	..	0·05
	Meherpore	0·15	0·03	2·70	0·28	..	0·07	1·50
	Kushtia	0·32	0·36	0·18	..	0·20	..	..
	Haringhata	0·97	2·26	..	0·14	..	..	..
Murshidabad ..	Kandi	0·65	0 52	..	..	0·62	..	..
	Berhampore (Observatory) ..	0·56	0·68	0·91	0·73	0·92	..	..
	Lalbagh	0·43	0·02	0·14	0·42	..	..	0·62
	Azimganj	0·10	..	..	2·57	..	..	..
	Jangipur	0·44	0·48	0·02	0·38	4·74	..	..
	Lalgola	0·03	1·09	0·65	2·05	..	..	1·36
	Akriganj	0·34	0·86	0·16	4·70	..	..	2·14
	Patkabari	..	1·55	0·15	0·23	..	..	..
	Dumkal	1·39	1·17	0·63	0 12	0·07	..	..
	Kallyanganj (Ishanpur) ..	1·31	0·11	0·03	0·07	1·31	..	..
	Khargram	1·32	..	..	..	..	..	..
	Bharatpur	0·80	1·50	0·50	0·20	..	.	0·10
Jessore	Narail	..	1·90	1·10	0·30	0·25	..	..
	Jessore (Observatory) ..	0·27	0·28	1·56	..	0·11	..	..
	Jhenida	0·55	1·01	..	0·20	..	0·12	1·15
	Magura	..	..	2·10	..	1·60	..	..
	Bongaon	0·20	1·83	4·65	..	..	..	..
Khulna ..	Satkhira (Observatory) ..	0·40	1·44	0·94	0·05	0·51	..	0·04
	Bagerhat	0·72	0·82	..	1·32	1·20	0·72	0·84
	Khulna (Observatory) ..	2·03	2·13	0·20	0·22	0·11	..	0·06
	Kaliganj	..	..	..	..	..	..	..
	Nakipur	0·50	0·60	0·10	..	..	..	0·50
	Dumuria	2·40	1·26	0·56	0·40	0·10	0·33	0·72
	Rampal	1·03	1·11	0·10	2·02	0·45	0·30	0·15
	Kalaroa	0·21	1·11	0·60	..	0·32	0·28	0·20
	Paikgachha (Raruli) ..	..	1·60	..	..	..	..	..
	Mollahat	1·89	2·61	1·96	0·22	0·49	..	0·52
	Morelganj	1·59	2·51	0·26	1·46	0·31	0·09	0·13
	Ismailkati	0·71	1·44	1·61	..	..	..	..
BURDWAN.								
Burdwan ..	Kalna	1·70	0·42	..	..	..	0·45	..
	Burdwan (Observatory) ..	1·20	1·24	1·20	0·51	0·22	0·38	..
	Katwa	..	0·60	4·80	0·60	2·34	..	..
	Asansol (Observatory) ..	1·55	0·70	0·18	2·00	0·02	..	..
	Mankar	2·52	..	..	1·22	..	..	..
	Mangalkot*							
	Royna*							
	Monteswar	0·80	1·00	2·46	..	..	..	..
Birbhum ..	Suri	0·46	1·18	0·06	..	0·44	..	..
	Hetampur	..	0·84	1·07	..	1·10	..	..
	Rampurhat	0·49	0·53	..	1·40	..	..	1·05
	Bolpur	0·45	0·76	2·29	0·42	0·47	..	..
	Murarai	1·35	0·20	0·60	..	..	..	..
	Labpur	0·20	1·50	0·21	0·04	0·56	..	..

* Not reported.

FOR THE MONTH OF JULY 1931.

28	29	30	31	Number of rainy days.	Average number of rainy days.	Total rainfall for the month.	Normal rainfall for the month.	Heaviest rainfall during the month.	Total rainfall from 1st June to 31st July 1931.	Normal rainfall from 1st June to 31st July 1931.
0·07	1·61	..	0·21	21	15·8	28·12	14·65	6·24	40·13	26·19
..	0·29	..	0·29	18	17·0	16·97	14·78	3·90	27·34	26·46
0·12	..	..	0·08	15	17·4	19·83	13·85	5·13	27·72	26·64
..	..	..	..	17	16·3	13·59	12·22	2·50	19·37	24·09
..	0·44	0·04	0·06	16	17·8	13·70	12·51	3·12	19·69	24·41
..	2·52	0·08	..	14	16·1	14·42	12·23	2·52	21·34	22·65
..	0·27	..	..	16	16·1	15·92	12·26	3·72	25·49	23·64
..	0·50	0·21	0·15	16	16·0	13.43	11·44	3·00	20·74	21·97
..	0·27	..	0·19	20	15·9	17·92	13·58	3·68	25·90	25·59
					(n)		(n)			(n)
0·10	0·60	..	0·68	16	14·9	9·86	10·75	1·60	17·53	20·78
0·08	..	0·03	0·32	20	15·9	11·07	11·08	3·29	18·72	21·74
0·13	..	0·24	1·50	22	15·3	11·43	10.24	1·68	19·38	20·83
..	0·25	0·20	0·15	19	15·7	13·40	10·56	2.70	24·67	20·86
..	..	1·16	0·18	17	15·1	7·90	10·15	1·54	19·93	21·00
1·73	0·99	..	..	16	10·4	11·24	7.07	2·26	20·20	14·34
0·37	0·16	..	1·26	15	15·6	7·51	11·72	1·26	12.62	22·23
0·61	0·22	..	3·94	18	15·9	14·74	10·85	3·94	20·12	20·89
0·23	0·74	2·00	0·24	20	15·7	11·92	12.07	2·00	21·36	22·58
..	..	..	1·00	15	15·6	11·59	10·91	3·13	20·68	21·22
1·22	..	..	0·91	17	15·5	12·34	11·18	4·74	24.46	21·53
..	0·22	0·54	0·34	16	14·8	9·89	10·94	2·05	18·88	21·00
..	0·08	0·15	0·28	17	14·7	17·16	10·77	4.70	29·32	22·12
..	..	2·53	..	14	12·6	11·74	9·02	2·53	19·41	18·57
0·37	..	0·03	1·89	13	15·2	16·22	10·52	5.55	29·29	21·09
2·65	0·13	..	1·07	18	15·3	13·30	10.09	2·65	19·51	22·07
1·25	1·15	0·92	0·07	10	(n)	7·73	(n)	1·32	11·68	(n)
1·20	..	0·20	..	11	(n)	10·40	(n)	2·50	11·85	(n)
..	0·50	0·45	2·10	18	16·0	17.40	10·69	2·50	22.72	22·73
..	0·87	1·39	0·69	21	17·3	14·32	12·20	1·79	23·19	24·87
1·26	0·06	0·20	..	10	15·8	10·77	10·38	1·26	16·54	22·89
0·75	..	1·27	0·77	17	16·1	14·99	10·92	2·95	25·35	22·40
..	4·85	3·55	0·45	19	15·7	22·72	11·21	4.85	30·21	22·02
0·15	..	..	0·03	20	17·7	16·52	13·19	2·05	23·83	25·49
0·22	1·10	..	..	20	19·6	16·05	14·76	1·50	16·05	28·90
0·46	0·79	0·33	1·00	26	18·1	19·17	12·97	2·14	25·74	25·70
..	..	..	..	7	17·1	6·31	17·69	1·65	12·35	22·31
..	..	0·30	..	14	15·2	10·30	12·76	2·80	13·95	26·07
0·80	..	0·47	0·23	24	17·8	16·24	15·09	2·40	24·83	28·17
0·60	0·42	0·12	2·10	27	18·2	18·79	14·44	2·10	25·95	27·04
..	0·28	0·10	0·45	21	17·6	17·73	12·75	2·40	27·81	24·22
..	..	..	..	7	18·5	11·15	14·76	2·70	17·15	27·47
0·45	0·11	..	0·13	24	17·4	17·59	16·28	3·11	18·78	30·77
..	0·14	0·16	1·60	21	19·2	22·66	17·45	4·12	31·13	33·26
0·40	0·70	..	..	17	16·8	15·91	15·06	2·72	26·84	27·01
..	..	..	1·15	12	14·7	13.59	11·13	2·58	18·61	21·65
..	..	0·26	0·02	17	15·7	10·49	12·57	2·18	16·35	22·81
0·61	1·83	..	..	16	15·3	17.17	11·13	4·80	26·48	21·15
0·58	0·20	1·23	0·02	20	16·0	20·69	12·93	6·60	23·36	22·86
..	..	2·52	..	9	14·2	/14·22	11·03	5·11	15·86	20·63
					11·9		8·03			20·89
					14·9		11·94			22·70
0·33	..	1·60	0·18	18	11·9	11·67	9·17	2·46	11·67	21·78
1·21	0·14	..	1·25	17	17·2	14·40	12·88	2·34	20·64	23·61
2·45	..	..	0·21	17	16·8	15.33	12·74	2·72	20·15	23·09
0·12	0·42	1·03	0·05	19	15·7	11·52	11·56	1·80	17·12	22·13
0·23	0·02	..	1·25	18	14·7	13.53	11·14	2·29	17·58	20·57
4·00	..	..	1.65	15	15·8	13·95	14·81	4·00	24·96	27·04
0·21	..	..	0·15	15	15·0	10·15	11·45	2·56	15·79	21·94

(n) Not ascertained.

DAILY RAINFALL RECORDED IN BENGAL

Division and district.	Station.	1	2	3	4	5	6	7
BURDWAN—*concld.*								
Bankura ..	Bankura (Observatory) ..	0·04	5·62	0·25	0·12	0·15	..	..
	Vishnupur	..	2·40	0·30	0·04	0·65	..	..
	Maliara	0·10	8·60	1·10	3·22	..	..	0·07
	Khatra	0·90	2·21	0·03	0·18	0·37	..	..
	Indas	..	2·60	0·22	0·08	..	..	0·58
	Kotalpur	..	0·80	1·35	0·19	0·55	..	0·19
	Onda	..	2·03	0·09	0·18	0·36	..	0·31
	Gangajalghati	0·03	3·39	0·91	0·54	0·36	0·16	0·11
	Raipur	0·96	2·15	0·46	0·38	0·88	..	0·03
	Sonamukhi*							
	Taldangra	7·64	0·27	0·33	0·66	..	0·75	0·05
	Saranga	0·04	1·86	0·27	0·35	1·04	..	0·09
	Indpur	..	0·50	1·00	0·15	..	..	..
	Arhara	3·80	0·12	1·21	0·18	0·30	0·25	1·22
	Barjora	4·10	2·00	1·64	0·17	..	..	0·20
	Simlapal	1·78	0·45	0·35	0·95	..	0·25	0·70
	Mejia	..	5·20	0·28	2·12	..	0·20	..
	Siromanipur	0·07	1·72	0·73	0·20	..	0·27	..
	Palasdanga	0·75	5·40	0·70	1·24	..	..	..
	Chatna	4·28	0·11	1·51	0·44	0·09	0·05	0·01
	Ranibandh	..	2·50	..	0·12	0·55	..	..
	Saltora	1·90	0·50	2·98	0·25	..	..	..
	Joypur	1·65	0·89	0·15	0·55	..	..	..
	Ambikanagar	..	..	0·46	0·32	0·54	..	..
	Joyrampur	2·43	1·15	0·25	0·15	..	0·25	..
Midnapore ..	Contai	1·28	2·50	1·09	0·43	..	0·26	..
	Tamluk	1·50	1·35	0·15	..	..	..	1·10
	Midnapore (Observatory) ..	0·78	0·25	1·13	0·07	0·12	..	..
	Ghatal	..	0·95	0·60	0·93	0·30	..	0·29
	Kukrahati	1·50	1·82	0·69	0·10	..	0·39	0·29
	Amlagora	0·08	2·56	0·20	0·50	..	..	..
	Panskura	0·30	0·48	1·26	1·20	0·07	0·03	..
	Dantan	0·65	0·14	..	..	..	..	1·15
	Chandrakona	..	0·80	0·95	0·40	0·80	..	..
	Pachet	2·44	0·40	0·47	0·32	..	..	..
	Bhagwanpur	1·60	0·50	0·15	0·50	0·09	0·05	..
	Kashiary	..	1·31	..	0·68	..	..	0·10
	Nayabasan	..	0·10	0·63	..	..	..	0·30
	Silda (Belpahari)	0·05	0·88	1·00	0·29	..	0·61	0·90
	Kharagpur	..	1·08	0·53	..	..	0·20	0·50
	Goaltore	0·25	1·72	0·48	0·88	1·41	..	..
	Salboni*							
	Narayangarh	0·90	0·50	0·90	..	..	..	0·50
	Ramnagar	3·21	0·66	0·59	0·05	0·17	..	0·16
	Mohanpur	1·25	2·10	1·25	0·25	..	..	0·25
	Jenka (Khajri)	2·80	2·85	1·75	0·48	0·20	0·50	..
	Nandigram	2·35	1·60	1·30	0·43	..	.	..
	Moyna	0·72	0·71	0·67	0·20	..	..	1·49
	Pingla	1·00	1·30	2·30	0·10	..	..	0·42
	Narajole	0·80	0·50	0·60	0·40	..	..	1·00
	Kolaghat (Dainan)* ..							
	Balichak	0·50	0·75	1·25	..	0·03	..	0·60
	Jhargram	..	0·57	1·50	0·53	..	..	0·12
Hooghly ..	Serampore	0·16	1·66	0·35	1·60	1·72	..	1·76
	Hooghly	0·42	1·77	0·20	0·60	..	..	2·10
	Arambagh	..	0·90	0·64	0·12	0·28	..	0·30
	Chanditala*							
	Tentulia	0·48	0·17	0·83	1·72	0·05	0·28	0·35
	Boinchee*							
	Khanakul	0·72	0·73	0·99	0·90	..	0·18	0·76
	Tarakeswar	2·90	0·30	0·20	..	..	..	0·10
Howrah ..	Howrah	0·23	2·85	0·60	0·32	0·33	0·02	..
	Mahesreka	..	0·95	1·55	0·55	1·65	0·12	..
	Uluberia	..	1·90	0·92	0·48	1·70	0·06	..
	Amta	0·10	1·45	0·88	0·62	0·22	..	..
RAJSHAHI.								
Boalia ..	Boalia (Observatory) ..	0·26	0·10	0·23	0·18	0·24	0·19	..
	Nator	0·05	0·15	..	0·80	0·18	1·90	..
	Naogaon	0·04	0·30	..	..	0·26	0·59	0·12
	Lalpur	0·10	0·05	0·34	0·21	1·00	..	..
	Manda	0·05	0·15	0·07	0·12	0·51	0·20	0·55
	Mahadebpur	..	..	0·96	0·15	0 10	0·10	0·13
	Tanor	0·10	0·40	0·50	..	..	..	0·28
	Chaugram*							
	Joari*							
	Badalgachi	..	..	..	..	..	1 10	..

* Not reported.

FOR THE MONTH OF JULY 1931.

8	9	10	11	12	13	14	15	16	17	18	19	20
0·07	0·55	..	..	0·09	0·06	..	..	..	0·41	0·21	..	..
0·02	0·40	0·62	..	1·42	0·17	0·07	0·24	0·64	0·93	2·23	0·08	..
..	0·78	0·16	0·15	0·25	..	..	..	0·19	0·55	..	..	..
0·15	0·26	0·80	0·26	0·95	0·55	0·15	..	0·11	0·85	1·03	1·17	..
0·06	0·41	0·21	0·08	..	1·48	1·53	0·08	0·65	0·88	0·31	0·02	..
0·07	..	..	..	0·14	0·41	0·80	..	0·26	0·52	0·56	0·50	..
..	1·56	0·09	..	2·55	..	..	..	..	0·40	0·90	..	..
0·41	0·72	0·11	0·13	0·33	..	..	0·29	..	0·17	1·52	0·04	..
0·39	0·05	0·36	..	0·19	3·61	0·07	..	0·39	0·90	0·06	..	..
0·65	0·67	..	..	2·62	0·98	..	0·65	1·00	0·23	0·38	1·40	..
1·47	0·02	0·61	..	0·92	2·26	0·06	..	0·15	1·56	..	0·01	..
0·50	0·07	..	1·00	0·50	0·25	0·25	1·00	0·07	0·08	0·06	..	1·00
..	..	..	0·52	0·12	0·23	0·76	0·16	0·95	0·56	..	..	0·12
1·50	0·14	0·07	..	..	..	0·34	..	0·55	0·21	..	..	2·28
0·05	0·30	0·40	..	0·15	0·20	0·25	0·20	0·30	0·30	3·30	0·02	0·02
0·10	0·35	0·30	0·20	0·80	..	..	..	0·30	0·60	0·30	0·23	..
..	..	1·10	..	1·35	1·05	1·38	..	0·30	0·23	0·10	0·70	..
..	2·00	..	..	..	..	..	..	0·30	0·21	..	..	..
1·31	0·01	0·02	0·23	0·15	..	0·03	0·22	0.51	0·03	..	..	0·81
0·14	0·32	0·18	..	0·15	0·65	1·03	0·30	0·10	1·00	..	0·20	..
0·50	0·20	0·10	0·20	..	0·30	0·26	0·10	0·10	..	0·70	..	0 60
0·14	0·06	..	0·06	0·36	..	..	..	0·45	1·04	..	..	0·08
0·64	0·94	0·35	0·84	..	0·21	0·34	0·32	0·64	0·24	0·61	0·34	..
0·42	..	..	0·77	0 15	..	0·21	..	0·65	2·75	1·45	0·42	0·72
0·09	0·24	0·18	..	0·31	0·80	0·36	0·23	0·43	0·59	0·05	0·11	..
..	1·74	..	0·05	..	0·88	..	..	..	0·10	..	0·92	.
0·83	0·07	0·43	0·03	0·15	2·15	2·15	..	..	0·38	0·76	..	0·16
1·20	2·18	..	0·51	0·30	..	0·29	..	..	..	1·17	..	..
0·23	0·76	0·03	0·27	..	0·30	..	..	1·45	..	0·15	0·80	0·42
1·50	0·03	0·22	..	0·80	2·05	0·33	0·65	..	2·42	3·50	0·14	..
0·68	0·06	1·03	0·05	2·10	0·22	0·04	0·05	..	0·48	..	..	0·15
0·07	0·04	..	0·74	..	0·63	..	0·08	..	0·06	0·18	..	1·01
2·00	..	0·38	..	0·88	0·90	1·22	..	..	1·50	0·50	..	..
0·53	..	..	..	0·80	0·70	..	..	..	..	..	..	1·80
0·40	0·05	0·69	.	0·40	0·14	0·76	0·02	..	1·46	.	..	1·61
0·39	..	..	..	0·25	.	0·20	..	..	..	0·45	..	0·25
1·26	..	..	..	1·12	0·48	0·80	..	..	..	..	..	..
0·02	..	..	0·04	0·34	0·57	0·19	0·03	1·07	0·17	..	0·04	0·88
..	0·24	..	1·11	1·10	1·40	0·20	..	0·75	..	0·17	..	0·16
0·87	..	1·36	..	0·96	0·96	0·15	0·47	1·35	2·70	0·10	..	..
1·80	..	..	1·00	..	..	..	..	..	..	..	..	..
0·02	0·27	0·04	0·94	2·71	2·12	0·22	0·03	2·29	0·08	0·17	0·12	0·01
0·15	1·05	..	1·05	1·10	0·25	..	..	0·15	0·75	0·25	0·50	0·60
0·15	0·75	..	..	0·07	0·17	0·26	0·30	..	2·20	0·05	0·03	0·05
0·50	0·50	..	0·25	0·20	..	..	..	3·40	..	..	0·60	0·50
..	1·20	..	0·70	0·80	0·80	0·30	..	0·69	..	..	0·20	0·50
..	1·45	..	1·50	1·40	0·30	..	..	0·15	0·39	..	..	0·50
0·20	1·00	..	..	..	..	..	..	..	..	..	..	..
0·19	1·62	..	1·15	1·70	..	..	..	0·70	0·10	..	0·22	0·59
0·61	0·24	..	..	0·28	1 32	1·42	0·50	0·38	2·60	..	..	..
1·83	..	..	..	..	0·80	1·83	..	0·47	0·16	..	..	..
0·50	..	0·50	..	..	0·05	0.40	..	0·20	0·50	0·05	0·05	0·05
0·82	0·01	1·44	..	0·31	0·07	0·01	0·43	0·03	0·96	0·28	..	..
0·01	..	..	..	0·05	0·08	0·65	..	0·92	0·12	..	..	0·37
..	1·60	..	0·32	0·18	0·10	0·10	0·06	0·50	0·02	..	..	0·44
..	0·30	..	0·40	0·70	0·20	..	0·50	0·95	0·50	..	0·05	0 30
4·00	..	0·95	..	..	0·98	1·02	0·02	..	0·30	0·47	..	0·06
3·25	0·25	2·20	..	0·25	0·10	0·15	..	..	0·90	..	..	..
4·56	..	2·45	..	0·07	0·60	0·04	..	0·06	1·25	1·35	..	0·14
1·15	..	2·12	..	..	0·35	0·70	..	..	0·70	..	..	..
2·31	..	..	0·17	0·37	0·08	..	0·17	0·56	0·35	0·41	0·02	0·41
..	..	..	0·28	0·32	..	..	0·15	0·20	0·45	0·20	..	..
0·57	..	1·80	0·06	..	0·05	0·41	0·30	..	..	..	2·50	0·05
2 54	0·04	..	0·08	0·38	..	..	0·12	1·50	0·50	0·62	..	0·34
0·12	0·70	0·15	..	0·02	0·27	..	..	..	..	0 96	1·50	..
1·45	0·85	..	..	..	0·07	0·25	0·70	0·48	..	0·37	0·10	0·15
..	..	0·68	..	0·90	..	0·12	0·40	..	0·78	0·13	..	0·15
1·19	..	..	..	..	..	..	..	..	0·75	0·73	0·95	..

DAILY RAINFALL RECORDED IN BENGAL

Division and district.	Station.	21	22	23	24	25	26	27
BURDWAN—*concld.*								
Bankura ..	Bankura (Observatory) ..	0·30	0·06	0·04	0·40	0·89	..	..
	Vishnupur	0·30	0·18	0·10	1·27	1·20	..	..
	Maliara	1·04	0·94	1·35	0·43	0·42	..	..
	Khatra	..	0·34	0·51	0·03	1·14	..	..
	Indas	0·33	0·49	0·41	1·18	0·27	..	..
	Kotalpur	1·15	0·26	0·23	1·00	0·10	..	..
	Onda	2·51	..	..	0·37	..	..	..
	Gangajalghati	0·86	1·82	0·17	1·29	0·04	..	..
	Raipur	0·22	0·19	0·16	..	1·26	..	..
	Sonamukhi*							
	Taldangra	0·02	0·70	0·14	0·24	..	..	..
	Saranga	0·23	0·20	3·05	0·23	..	0·17	..
	Indpur	0·50	0·09	1·00	..	..	..	0·07
	Arhara	0·55	0·02	0·24	0·45	..	..	..
	Barjora	1·71	1·88	0·67	0·82	..	..	..
	Simlapal	0·25	0·45	0·70	..	..	..	0·16
	Mejia	0·55	0·55	0·03	1·30	0·05	..	..
	Siromanipur	0·25	0·78	0·25	..	..	..	..
	Palasdanga	1·90	0·80	0·25	0·72	0·87	..	..
	Chatna	0·19	0·12	0·69	0·04	..	..	..
	Ranibandh	..	0·10	0·08	1·02	..	..	..
	Saltora	0·28	0·05	0·65	0·23	..	..	0·79
	Joypur	0·22	0·47	..	1·55	..	..	..
	Ambikanagar	..	..	..	..	..	..	..
	Joyrampur	0·11	..	1·07	1·17	..	..	..
Midnapore ..	Contai .. .	..	0·81	0·28	..	..	..	..
	Tamluk .	1·80	1·00	..	..	..	..	..
	Midnapore (Observatory) ..	0·11	1·08	0·08	..	..	..	..
	Ghatal	0·80	1·02	1·59	..	..	..	0·39
	Kukrahati	0·15	0·15	..	..	..	..	..
	Amlagura	0·35	0·40	1·03	..	..	..	..
	Panskura	0·17	0·85	2·00	..	..	..	0·11
	Dantan	0·70	..	..	..	..	1·05	0·15
	Chandrakona	..	0·90	2·60	0·60	0·34	..	..
	Pachet	1·80	1·70	0·03	..	..	..	..
	Bhagwanpur	0·06	0·35	0·22	..	0·44	0·14	0·04
	Kashiary	..	2·05	..	..	..	..	0·04
	Nayabasan	..	3·10	..	..	..	0·81	..
	Silda (Belpahari)	0·29	0·17	..	0·06	..	..	0·07
	Kharagpur	1·55	0·30	..	..	..	..	..
	Goaltore	0·50	0·32	1·95	..	1·33	0·36	..
	Salboni*							
	Narayangarh	1·40	2·10	..	..	0·30	..	0·50
	Ramnagar	1·96	0·22	0·01	0·14	..	..	..
	Mohanpur	0·80	0·60	..	..	..	..	..
	Jenka (Khajri)	0·75	0·50	..	..	0·02	..	..
	Nandigram .. .	0·70	..	..	..	.	..	..
	Moyna	1·10	0·30	..	0·14	..	..	..
	Pingla	1·30	1·30	..	..	..	..	..
	Narajole	1·20	0·80	..	..	..	0·40	..
	Kolaghat (Dainan)* ..							
	Balichak	2·07	1·12	..	..	0·05	..	..
	Jhargram	0·32	0·56	..	..	0·52	..	..
Hooghly ..	Serampore	..	1·30	0·20	..	..	..	..
	Hooghly	0·30	1·30	2·50	..	0·15	0·05	..
	Arambagh	0·04	1·15	0·58	0·01	..	..	..
	Chanditala*							
	Tentulia	0·63	0·30	..	..	..	..	..
	Boinchee*							
	Khanakul	1·66	0·62	..	0·04	0·16	0·14	..
	Tarakeswar	0·15	1·10	..	..	..	..	..
Howrah ..	Howrah	0·03	1·05	0·40	..	0·11	0·02	..
	Maheshreka	0·10	1·49	0·95	..	..	..	..
	Uluberia	0·08	0·85	2·40	..	..	..	..
	Amta	0·20	1·25	0·35	..	..	..	..
RAJSHAHI.								
Boalia ..	Boalia (Observatory) ..	2·06	0·86	0·06	0·29	2·42	..	..
	Nator	1·85	0·63	0·40	0·20	2·50	0·30	0·10
	Naogaon	0·12	0·78	0·12	0·84	1·21	..	..
	Lalpur	0·62	0·46	..	..	..	..	..
	Manda	0·38	..	0·41	0·49	3·35	..	0·38
	Mahadebpur	0·35	0·25	0·30	1·90	..	..	2·80
	Tanor	0·88	0·64	0·05	2·00	0·11	..	1·15
	Chaugram*							
	Joari*							
	Badalgachi	..	..	..	..	..	..	..

* Not reported.

FOR THE MONTH OF JULY 1931.

28	29	30	31	Number of rainy days.	Average number of rainy days.	Total rainfall for the month.	Normal rainfall for the month.	Heaviest rainfall during the month.	Total rainfall from 1st June to 31st July 1931.	Normal rainfall from 1st June to 31st July 1931.
..	..	1·20	0·77	12	15·4	11·23	13·11	5·62	14·68	24·20
..	0·01	1·97	1·33	18	16·2	16·57	11·68	2·10	22·72	21·70
..	0·30	0·25	..	17	16·0	19·00	11·64	8·60	23·50	21·70
..	0·85	0·86	1·39	21	16·0	15·09	12·13	2·21	19·60	23·14
..	..	0·90	1·57	17	14·9	14·34	11·25	2·60	19·32	20·61
..	0·33	0·21	1·16	20	13·1	10·78	12·80	1·35	16·76	22·91
..	..	..	1·27	11	13·7	12·62	9·68	2·55	12·62	17·88
..	0·16	1·54	0·12	21	14·6	15·22	11·37	3·30	18·97	21·99
..	1·34	0·19	..	17	15·9	14·24	12·22	3 61	20·06	22·40
					15·0		12·43			22·20
..	1·42	0·74	0·60	20	13·0	22·14	10·04	7·64	29·99	19·04
..	0·45	0·84	..	17	14·2	15·88	9·93	3·05	17·92	20·98
..	..	0·50	..	13	12·6	8·59	10·19	1·00	10·67	18·97
0·30	..	1·73	..	20	(n)	14·09	(n)	3·80	16·34	(n)
2·36	2·18	1·01	..	18	(n)	23·83	(n)	4·10	29·79	(n)
0·05	0·40	1·25	..	21	(n)	13·23	(n)	3·30	17·26	(n)
..	0·30	..	0·20	18	(n)	13·96	(n)	5·20	16·73	(n)
..	0·98	0·30	1·25	18	(n)	13·01	(n)	1·72	16·53	(n)
..	0·42	0·50	0·30	15	(n)	16·36	(n)	5·40		(n)
..	0·52	1·40	..	15	(n)	12·77	(n)	4·28	15·72	(n)
..	0·40	0·20	0·21	18	(n)	9·25	(n)	2·50	14·64	(n)
1·80	0·10	..	..	20	(n)	12·61	(n)	2·98	15·39	(n)
1·24	0·50	0·20	..	15	(n)	10·51	(n)	1·65	14·87	(n)
0·41	0·65	1·42	..	17	(n)	9·27	(n)	1·42	9·27	(n)
..	..	1·72	..	18	(n)	15·84	(n)	2·75	19·52	(n)
..	0·37	..	..	17	15·0	10·41	13·26	2·50	17·34	23·74
..	..	..	..	10	13·8	10·59	12·41	1·80	13·53	23·02
..	4·09	2·80	0·62	17	15·7	18·24	11·89	4·09	22·64	21·93
..	0·08	..	0·84	16	15·2	13·44	12·20	2·18	18·62	22·33
0·96	..	..	1·75	18	15·5	12·21	13·40	1·82	20·17	25·80
..	1·15	2·80	1·00	18	15·3	21·71	11·79	3·50	24·56	22·13
..	0·21	..	0·15	16	15·3	11·69	11·79	2·10	15·89	22·71
0·83	..	0·26	0·93	13	13·2	8·72	10·85	1·15	14·17	21·20
..	3·60	0·96	0·46	18	13·2	19·79	12·15	3·60	19·79	24·73
..	..	..	..	10	13·6	10·99	12·46	2·44	10·99	22·28
..	0·02	..	..	15	15·3	10·69	10·90	1·61	14·34	25·16
1·85	1·47	..	0·61	12	11·5	10·66	10·28	2·05	10·66	20·02
..	..	0·35	0·46	11	12·4	9·41	10·23	3·10	12·03	20·88
0·18	0·08	0·02	..	14	14·5	7·95	10·60	1·07	12·49	21·36
3·11	0·90	..	0·46	17	(n)	13·76	(n)	3·11	20·63	(n)
..	0·44	0·38	0·06	21	15·1	10·44	11·18.	2·70	22·99	21·99
					13·8		10·54			22·84
0·40	..	0·20	..	12	14·9	10·50	12·95	2·10	15·05	26·22
0·33	..	..	1·26	18	11·0	17·78	9·64	3·21	29·45	23·51
0·15	..	..	..	18	13·6	12·50	12·40	2·10	18·26	23·41
..	0·30	..	0·10	16	15·5	14·28	10·85	2·85	24·69	25·76
0·20	..	..	0·25	14	13·5	12·78	10·69	3·40	24·51	24·47
..	..	..	..	16	14·3	10·52	12·18	1·49	17·33	23·46
0·30	..	1·45	1·25	17	13·2	16·41	10·79	2·30	19·96	22·02
0·60	..	..	..	11	14·0	7·50	12·21	1·30	10·30	26·83
					(n)		(n)			(n)
2·03	..	0·77	0·05	16	(n)	15·49	(n)	2·07	22·57	(n)
..	1·24	0·50	0·06	17	(n)	13·27	(n)	2·60	18·74	(n)
..	2·16	..	..	14	16·5	16·00	12·05	2·16	22·24	20·99
..	2·40	0·60	0·05	16	15·9	14·64	10·97	2·50	20·00	20·84
..	0·14	0·09	0·46	15	15·6	9·07	12·51	1·44	15·74	22·41
					(n)		(n)			(n)
0·20	1·19	..	0·11	15	(n)	8·51	(n)	1·72	14·57	(n)
					(n)		(n)			(n)
0·13	0·02	..	..	18	(n)	10·37	(n)	1·66	17·23	(n)
1·30	1·20	0·10	..	17	(n)	11·25	(n)	2·90	17·01	(n)
..	0·58	0·23	..	16	17·0	14·57	12·14	4·00	22·07	25·26
..	..	..	..	15	16·2	13·46	13·27	3·25	20·05	23·68
..	..	..	..	12	17·0	18·91	12·48	4·56	26·95	25·01
..	0·85	..	0·40	15	15·1	11·34	12·47	2·12	18·51	21·98
0·93	..	..	0·02	19	15·0	13·59	10·81	2·96	24·24	21·98
0·06	0·03	0·70	1·40	19	16·1	12·85	12·22	2·50	23·59	23·32
0·76	..	..	0·82	16	15·3	11·70	11·92	2·50	19·35	24·68
0·10	..	1·38	0·93	16	14·9	11·41	11·41	2·54	26·09	22·33
..	..	..	0·05	16	14·1	10·43	12·38	3·35	17·55	23·37
..	..	0·28	0·35	21	15·0	13·89	11·97	2·80	21·67	25·77
..	..	..	0·10	17	14·8	10·33	10·63	2·00	17·07	20·98
					(n)		(n)			(n)
					(n)		(n)			(n)
3·75	1·60	0·27	0·30	9	(n)	10·64	(n)	3·75	20·15	(n)

(n) Not ascertained.

DAILY RAINFALL RECORDED IN BENGAL

Division and district.	Station.	1	2	3	4	5	6	7
RAJSHAHI—*concld.*								
Dinajpur ..	Nithpur	0·34	..	0·27	0·30	..	..	0·52
	Nawabganj	..	..	..	..	..	1·00	0·37
	Gangarampur	..	0·02	..	..	1·07	3·86	0·03
	Churamon	..	..	..	0·80	..	..	1·05
	Raiganj	..	0·36	..	..	..	..	..
	Dinajpur (Observatory) ..	..	0·02	..	0·04	..	0·16	0·02
	Balurghat	..	..	..	0·13	0·04	0·05	1·96
	Thakurgaon	..	0·03	0·04	..	0·10	..	0·10
	Setalganj	..	0·40	..	..	..	0·40	0·15
	Ramganj	..	0·09	..	..	0·23	..	..
	Atwari	..	..	0·10	0·15	0·25	1·00	3·50
	Birganj	0·86	0·25	..	0·68	0·54	0·72	0·15
	Parbatipur	..	..	..	..	..	1·00	0·50
	Patnitola	..	0·06	0·17	0·19	0·27	0·82	0·07
	Sapahar	..	..	..	0·62	0·39	..	0·39
Jalpaiguri ..	Jalpaiguri (Observatory) ..	0·90	0·10	0·45	0·15	..	0·10	4·55
	Alipur Duars	0·22	0·08	..	..	..	3·64	0·42
	Falakata	0·15	..	..	..	..	0·20	3·30
	Debiganj	..	..	..	..	..	..	0·75
	Buxa*							
	Kalchini	0·46	1·60	0·17	0·03	0·65	0·67	3·02
	Kumargram	..	2·05	..	0·27	..	1·74	1·56
Darjeeling ..	Siliguri	1·07	0·28	0·22	0·33	0·31	..	1·80
	Darjeeling (Observatory) ..	0·81	3·31	0·40	0·52	1·04	0·10	0·71
	Kalimpong	1·12	1·32	0·07	0·32	0·34	0·08	0·39
	Mongpoo	2·04	1·75	0·46	0·19	0·80	0·04	1·53
	Kurseong	1·28	1·12	0·55	0·07	2·03	0·22	0·24
	Pedong	0·95	0·74	0·11	1·36	1·40	0·04	1·76
Rangpur ..	Bhawaniganj (Gaibandha) ..	..	..	0·45	0·30	0·20	..	0·86
	Rangpur (Observatory) ..	0·22	0·07	0·69	..	0.04	0·39	0·12
	Pirganj	0·40	..	..	0·75	0·55	0·75	2·30
	Kurigaon	0·03	0·28	0·20	0·46	..	0·34	0·72
	Gobindganj	..	0·12	..	0·25	..	..	0·35
	Bagdogra (Nilphamari) ..	..	0·36	..	..	..	..	3·32
	Ulipur	0·08	..	0·14	..	..	0·08	0·55
	Sunderganj	0·06	..	0·16	..	..	0·20	0·07
	Saidpur	0·44	0·03	..	0·33	0.11	0·42	1·92
Bogra ..	Sherpur	0·25	3·07	..	..	..	..	..
	Nowkhilla*							
	Bogra (Observatory) ..	0·27	..	..	0·20	0·16	0·64	0·03
	Panchbibi		0·08	0·13	..	..	0·11	1·88
	Khetlal	0·07	0·15	..	..	0·09	0·08	0·10
	Adamdighi	0·15	..	..	..	..	0·10	7·45
	Dubchanchia	0·22	..	0·10	..	0·22	..	..
Pabna ..	Shazadpur	..	..	..	0·32	0·27	..	0·11
	Pabna	0·17	0·05	0·14	0·09	0·22	0·01	..
	Sirajganj (Observatory) ..	0·45	0·06	0·02	0·05	0·85	0·03	..
	Iswardi	0·20	..	0·17	0·13	0·33	0·12	..
Malda ..	Malda (Observatory) ..	..	..	0·32	0·11	0·22	..	0·32
	Chanchal	0·04	0·73	0·37	..	..	..	..
	Gazol	0·60	..	0·60	0·80	1·08	0·42	0·44
	Sibganj	..	..	0·72	..	0·95	..	..
	Gomastapur	0·27	0·11	0·16	0·11	..	..	0·11
	Nawabganj*							
DACCA.								
Dacca ..	Munshiganj	..	0·07	0·02	..	0·07	0·05	0·11
	Dacca	..	0·52	0·21	..	..	0·36	0·72
	Nawabganj	0·40	..	0·30	0·31	0·45	0·08	0·42
	Narayanganj (Observatory) ..	0·10	0·07	0·17	0·06	0·08	0·24	0·02
	Narsingdi	..	..	..	..	..	..	0·01
	Manikganj	0·50	..	..	0·23	0·10	0·40	..
	Joydebpur	0·15	..	0·16	..	0·20	0·34	0·31
	Kapasia	0·07	..	..	..	0·45	..	0·03

*Not reported.

FOR THE MONTH OF JULY 1931.

8	9	10	11	12	13	14	15	16	17	18	19	20
1·87	1·26	..	..	0·20	..	0·13	..	0·14	..	1·57	0·18	1·00
..	0·76	..	..	..	..	..	0·44	..	0·20	..	0·02	2·32
0·11	4·89	0·45	1·55	0·25	0·85	0·20	0·52	0·33	0·4	..	1·85	1·08
0·80	0·30	0·18	0·07	0·16	..	0·84	..	0·70	0·05	3·35	0·25	0·35
1·00	1·35	0·55	0·82	..	1·00	..	0·78	..	..	..	1·80	0·30
0·25	1·35	0·60	0·05	0·90	0·10	0·05	1·25	..	0·03	..	0·42	0·35
0·58	..	0·19	0·83	0·25	0·09	..	0·18	..	0·05	0·23	0·05	1·64
1·11	1·25	0·40	0·11	..	..	..	0·62	0·02	0·07	..	0·20	0·55
1·10	0·25	1·50	..	..	0·80	..	..	0·10	0·20	..	1·80	..
0·05	1·75	..	0·87	..	..	..	0·82	0·21	..	..	..	2·70
0·60	0·30	1·70	0·30	..	..	..	1·15	0·20	0·30	0·20	1·40	0·15
1·50	1·31	1·36	0·52	0·25	0·17	1·21	0·38	..	0·22	1·05	..	0·85
3·79	0·74	0·50	0·10	0·19	..	..	0·06	0·06	0·03	0·10	1·00	0·10
0·11	0·10	1·15	0·03	..	0·08	0·85	0·48	0·39	0·17	0·09	..	0·25
0·14	0·97	0·73	..	..	..	0·35	0·45	0·10	0·32	..	1·27	0·03
0·03	0·76	1·34	0·60	0·40	0·20	0·50	0·25	0·42	0·63	..	0·05	2·35
0·26	1·72	0·78	0·94	1·45	0·38	0·11	0·64	0·21	0·18	0·12	0·98	0·36
0·03	4·16	0·59	0·06	..	..	..	0·60	0·53	2·15	0·16	0·30	0·18
0·82	2·16	0·48	..	..	..	..	..	1·50	..	..	0·13	0·75
0·08	2·55	0·27	1·80	0·25	0·09	0·58	0·34	0·32	0·17	0·12	3·85	1·89
0·43	3·02	0·33	4·90	1·49	0·04	0·12	..	..	0·78	1·10	5·28	0·98
1·12	4·09	0·42	0·56	1·16	0·46	..	0·22	0·94	0·81	0·16	0·72	1·47
1·08	3·35	0·44	0·38	1·87	0·29	0·17	0·59	1·45	3·02	0·24	0·44	2·74
1·20	2·45	0·49	0·66	0·73	0·26	0·07	0·44	0·60	0·71	0·85	0·03	2·14
0·93	3·50	1·34	0·37	1·20	0·11	0·06	0·69	0·97	2·71	0·33	0·04	3·41
1·96	4·29	0·43	0·60	3·32	0·47	0·31	0·40	1·74	2·94	0·55	0·63	4·98
1·30	2·57	0·32	1·23	0·50	1·13	0·40	0·21	0·92	0·84	0·76	0·15	1·53
1·10	0·30	1·15	0·32	0·48	1·70	0·32	0·22	0·15	..	..	0·67	0·50
2·06	1·02	2·83	0·72	0·06	..	0·02	..	0·75	0·15	..	1·15	1·82
0·68	2·55	0·15	0·40	0·55	..	0·37	..	..	..	0·45	..	4·85
3·12	1·38	2·09	0·80	1·73	..	..	0·02	..	..	0·80	0·03	1·15
1·00	0·50	0·50	0·65	..	1·70	..	0·30	0·20	0·60	0·55	0·20	0·50
0·75	..	..	..	..	..	..	..	..	..	..	..	2·20
1·85	0·87	1·55	0·76	0·72	..	..	..	0·10	..	..	0·17	0·30
1·10	0·71	1·68	0·48	0·42	0·30	0·08	..	..	0·07	0·20	0·32	0·20
2·26	1·46	0·36	0·06	0·35	0·07	..	..	..	..	0·06	1·27	1·69
..	..	..	..	..	..	..	..	..	0·70	..	..	1·50
0·39	..	1·18	0·08	2·99	0·44	0·10	0·03	0·37	0·30	0·12	..	1·88
..	..	0·80	0·31	0·43	..	0·17	0·23	..	0·11	0·30	0·67	0·52
0·20	1·45	0·06	0·05	..	..	0·10	0·08	..	0·09	0·11	0·88	0·15
..	1·40	..	..	..	..	0·10	..	0·20	0·15	1·10	1·40	0·26
..	..	1·32	..	0·48	..	..	..	0·15	..	..	1·50	..
0·35	0·05	0·59	..	..	..	..	..	4·01	0·20	0·18	2·13	1·76
0·22	1·18	..	0·35	0·02	..	0·03	0·45	0·03	0·61	0·09	0·05	1·33
2·80	0·04	0·53	0·38	0·12	0·12	0·05	0·19	0·08	0·99	0·36	..	0·08
2·41	..	..	0·11	0·10	..	..	0·20	..	1·01	0·82	..	0·06
0·21	0·07	1·88	0·11	0·03	1·52	0·09	1·34	0·03	0·71	2·07	2·38	0·91
1·43	1·50	0·90	0·59	..	..	0·15	1·05	..	0·55	0·50	2·25	1·60
0·46	1·36	0·40	1·00	..	0·14	..	0·12	..	0·28	..	0·76	1 10
..	..	0·70	0·37	0·55	..	..	..	..	0·47	0·15	..	0·75
0·32	..	0·71	0·23	..	0·25	0·50	..	0·45	0·57	0·39	..	0·80
3·08	0·06	0·15	1·31	1·63	..	0·19	..	0·94	0·21	0·75	0·25	0·39
..	0·70	0·92	3·04	..	..	0·42	..	1·48	..	0·08	0·96	0·24
0·10	0·17	1·36	1·89	0·30	..	0·03	0·46	0·85	0·11	0·19	..	0·89
1·50	0·04	0·37	1·65	0·78	0·06	0·08	0·31	0·95	0·10	0·08	..	0·11
0·28	..	0·07	2·68	..	..	..	..	..	..	..	..	..
0·05	0·52	..	1·87	0·40	0·32	..	..	0·44	0·25	..	..	1·20
3·50	0·20	4·60	0·14	0·21	0·11	0·17	0·35	0·31	0·75	0·31	0·66	0·97
0·18	2·72	0·62	2·75	0·57	0·15	0·04	0·50	0·26	0·03	0·67	..	1·15

DAILY RAINFALL RECORDED IN BENGAL

Division and district.	Station.	21	22	23	24	25	26	27
RAJSHAHI—*concld.*								
Dinajpur ..	Nithpur	0·55	0 20	0·18	1·54	..	0 27	
	Nawabganj	..	0 42	2 19	3·65	4 50	..	..
	Gangarampur	0·71	..	0·53	2·32	3 62		.
	Churaimon	0·05	1·20	1·05	0·21	0 80	0·10	0 12
	Raiganj	..	0·60	1 60	3·25	..	..	0·65
	Dinajpur (Observatory) ..	0·03	0·25	1·12	0 70	3 35	0·08	0 95
	Balurghat	0 33	4·05	0·54	3·89	0·74	0·02	0·22
	Thakurgaon	1·03	0·45	1·35	6·15	2·20	2·12	4·10
	Setalganj	..	0·25	0·60	0 90	1·60	0·50	2·00
	Ramganj	..	0·30	0·65	5·82	0·60	..	1·93
	Atwari	2·00	6·00	5·60	4·00	5·50	1·50	1·10
	Birganj	0·12	1·54	0 38	0·62	1·78	0 04	3·94
	Parbatipur	1·00	0·60	0·90	0·70	3·50	0·11	0·20
	Patnitola	2·20	0·42	0·08	0·45	1·40	..	0·03
	Sapahar	1·00	0·56	1 13	1·10	0·96	..	..
Jalpaiguri .	Jalpaiguri (Observatory) ..	0·70	2·55	3·45	2·49	1 66	2·39	1·76
	Alipur Duars	1·45	3·68	4 12	3 38	5·25	6·52	4·50
	Falakata	0·10	2 30	5·11	3 02	3 98	3·40	1·80
	Dobiganj	..	1 90	1·70	3 60	4·93	3·80	2·90
	Buxa*							
	Kalchini	0·94	0·73	3·17	2·08	2·77	0·46	0·78
	Kumargram	0·53	3·75	3·79	3·80	0·96	0·26	1 80
Darjeeling —	Siliguri .. .	0·67	2·02	4·03	3·62	1·15	0 04	3·25
	Darjeeling (Observatory) ..	2·08	2·13	4·35	2·73	1·48	0·12	0·78
	Kalimpong	1·65	1·29	1·94	1·34	0·91	0·39	0·29
	Mongpoo	4·14	2·87	5·00	3·72	1·55	0·53	0·62
	Kurseong	0·43	5·32	3 41	3·83	1·72	0·75	1·10
	Pedong	0·07	2·03	2·12	1·13	0·62	1·84	0·47
Rangpur ..	Bhawaniganj (Gaibandha) ..	0·85	1·10	0·70	1·62	3·00	0·05	..
	Rangpur (Observatory) ..	2·78	0·52	0·93	1·65	3·77	3·98	..
	Pirganj	..	1·30	3·43	6·75	0·60	..	..
	Kurigaon	1·96	1·58	0·60	3·86	1·68	0·56	0·03
	Gobindganj	0·15	2·65	3·13	3·05	1·70	2·70	2·50
	Bagdogra (Nilphamari) ..	2·25	0·52	2·80	3·10	2·20	2·00	..
	Ulipur	0·20	4·30	1·28	4·20	2·58	0·06	0·19
	Sunderganj	..	2·65	0·74	3·22	1·52	0·10	0·20
	Saidpur ..	0·82	1·10	1·77	2·28	0·29	7·26	0·12
Bogra ..	Sherpur	0·63	0·12	1·20	0 28	0 30	..	..
	Nowkhilla*							
	Bogra (Observatory) ..	0·55	2·01	1·70	0·45	0·87	0·56	0·08
	Panchbibi	0 88	1·16	1·38	4·08	..	0·25	2·46
	Khetlal	0·20	2·45	..	1·30	2·08	2·88	2·30
	Adamdighi	0·60	0·84	0·40	2·64	..	..	0·50
	Dubchanchia	1·22	0 15	0·48	1·32	0·52	..	..
Pabna ..	Shazadpur	0·50	0·17	0·91	..	..	..	..
	Pabna	2·04	0·31	0·05	..	0·40	..	..
	Sirajganj (Observatory) ..	3·66	0·82	0·07	0·24	0·07	..	..
	Iswardi	2·03	0·45	1·32	..	1·45	..	0·15
Malda ..	Malda (Observatory) ..	0·16	1·07	1·71	0·22	1·32	0 03	0·01
	Chanchal	2·18	0·41	1·17	3·28	0·03	0·15	0·13
	Gazol	..	2·85	1 50	1·64	..	..	..
	Sibganj	..	0·33	..	..	0·80	..	..
	Gomastapur	..	0·29	0·15	1·23	..	..	4·11
	Nawabganj*							
DACCA.								
Dacca ..	Munshiganj	3·20	1·38	0·54	0·49	..	0·26	..
	Dacca	2·42	0·08	1 02	0·48	..	0·08	0·32
	Nawabganj	1·19	1·00	1·36	0·10	0·23	0·03	..
	Narayanganj (Observatory) ..	0·89	0·77	0·03	0·07	0·29	0·11	0·06
	Narsingdi	0·55	0·11	0·64	..	0·15	0·10	..
	Manikganj	0·10	0·30	0·10	0·15	0·10	..	..
	Joydebpur	0·88	0·80	0·68	1·00	0·05	..	0·08
	Kapasia	0·72	0 75	1·12	0·38	1·09	..	..

*Not reported.

FOR THE MONTH OF JULY 1931.

28	29	30	31	Number of rainy days.	Average number of rainy days.	Total rainfall for the month.	Normal rainfall for the month.	Heaviest rainfall during month.	Total rainfall from 1st June to 31st July 1931.	Normal rainfall from 1st June to 31st July 1931.
3·30	..	0·23	..	19	14·4	14·05	12·25	3·30	22·59	23·52
0·35	..	0·85	0·06	12	13·7	17·13	15·56	4·50	26·94	30·69
..	..	2·12	..	19	15·4	26·47	15·60	4·89	30·57	28·51
..	1·65	0·10	0·52	20	15·6	15·54	13·87	3·35	22·25	25·43
..	0·25	0·45		15	16·4	14·76	14·75	3.25	21·10	27·52
0·50	..	1·40		16	17·1	13·97	15·50	3·35	18·60	29·55
1·11	..	0·04		17	15·9	17·81	13·18	4·05	23·96	25·16
0·80	0·15	1·18	..	19	16·2	24·13	19·00	6·15	37·12	36 95
1·10	..	1·55	..	18	14·3	15·20	15·55	2·00	20·15	30 67
..	..	2·55	..	12	16·7	18·07	15·81	5·32	24·45	31·81
0·20	0·55	..	0·45	25	18·5	38·20	25·31	6·00	57·83	46 16
0·32	..	0·36	..	26	15·3	21·73	17·03	3·94	35·60	33·03
0·10	..	2·00	0·10	20	15·1	17·37	16·33	3·79	29·92	31·04
2·10	..	..	0·04	17	(n)	12·09	(n)	2·20	17·34	(n)
4·32	..	..	0·14	18	(n)	14·97	(n)	4·32	21·28	(n)
2·61	2·38	0·07	0·14	26	21·9	33·98	31·28	4·55	61·60	55·01
3·56	0·98	2·72		20	19·3	48·55	32·97	6·52	85·96	63·63
1·70	1·12	0·73	0·12	22	20·0	35·79	28·43	5·11	64·39	52·29
0·80	..	..	..	14	17·5	26·22	19·93	4·93	54·37	39·88
					24·8		50·36			89·36
3·23	0·18	0·87	0·02	27	23·1	34·14	35·36	3·85	62·70	64 09
0·71	0·94	1·08	0·16	25	21·7	50·87	43·20	9·26	94. 83	26·11
0·31	3·12	1·62	3·10	28	22·8	39·07	33·40	4·09	69·12	58·80
0·99	0.64	2·37	1·64	31	25·4	42·20	32·31	4·35	58·90	57·17
2·96	1·05	0·75	0·78	27	22·3	27·63	23·90	2·96	35·86	41·38
1·46	1·02	1·90	1·29	28	23·9	48·07	31·08	5·60	68·52	57·14
0·81	1·33	1·33	1·04	30	27·5	49·20	43·60	5·32	66·25	76·47
1·12	0·36	1·32	0·56	30	26·4	30·76	24·42	2·57	44·01	44·12
2·00	1·05	0·50	0·28	24	14·7	20·77	13·15	3·90	29·63	28·62
1·41	..	..	0·12	20	15·1	29·07	15·26	3·98	44·37	32·87
0·85	0·38	0·30	0·45	21	13·3	28·81	15·75	6·75	42·86	32·27
0·25	0·37	0·21	0·15	22	14·0	24.50	16·09	3·86	39·09	38·29
3·50	0·40	2·07	..	24	15·3	29·27	14·04	3·50	39·88	28·35
..	..	0·20	0·15	12	15·8	19·85	17·18	3·32	41·39	37·03
0·82	0·50	2·12	0·16	20	13·4	23·58	14·08	4·30	37·53	33·03
0·60	0·38	0·76	0·04	20	14·0	16·35	14·97	3·22	27·23	30·85
..	0·21	..	1·06	21	13·9	26·64	16·71	7·26	46·08	32·61
..	1·47	1·20	0·85	12	15·6	11·66	12·22	3·07	..	24·00
					14·7		12·22			25·65
1·36	0·08	2·56	0·84	22	16·6	20·25	13·06	2·99	26·85	27·09
..	0·23	1·22	0·16	21	15·1	17·56	12·70	4·08	23·01	24·60
..	0·20	1·80	..	16	15·8	17·86	10·16	2·88	25·91	18·61
..	..	0·23	0·40	17	(n)	10·92	(n)	2·64	19·04	(n)
0·30	..	2·67	1·20	15	(n)	11·55	(n)	2·67	16·58	(n)
..	..	1·35	..	14	13·9	12·00	*10·49	4·01	21·42	21·09
0·03	..	0·10	0·70	15	16·4	9·57	10·76	2·04	20·11	22 09
..	0·41	0·34	0·92	16	15·6	13·73	11·49	3·66	24·55	23·90
0·06	1·18	2·14	0·18	19	13·5	14·62	9·52	2·41	30·08	20·48
3·16	..	4·08	0·18	20	14·6	20·26	10·97	3·16	24·04	21·32
..	..	2·70	0·36	20	17·3	20·07	13·83	3·28	29·70	25·20
0·38	2·40	..	0·75	21	15·6	19·08	13·60	2·85	24·43	23·96
4·40	0·10	..	..	12	15·3	10·29	11·10	4·40	15·92	20·82
..	..	..	..	18	13·9	10·76	12·02	4·11	16·84	22·50
					13·2		11·10			22·88
1·14	..	0·11	0·05	18	17·6	16·54	14·11	3·29	24·26	28·61
..	0·03	1·04	..	13	17·5	15·12	12·84	3·04	20·77	26·40
0·20	0·48	0·11	0·40	24	14·3	13·41	13·87	1·89	19·24	29·39
0·12	..	0·92	0·04	19	17·2	11·57	12·98	1·65	20·24	25·93
0·14	0·11	0·32	0·66	11	16·8	5·82	12·26	2·68	7·51	27·18
..	1·20	..	1·60	18	15·8	9·83	11·76	1·87	16·63	23.30
2·06	1·50	0·34	0·10	26	17·5	20·03	13·45	4·60	31·65	27·49
0·18	0·20	1·00	0·26	20	17·2	16·79	14·93	2·75	32·48	30·96

(n) Not ascertained.

DAILY RAINFALL RECORDED IN BENGAL

Division and district.	Station.	1	2	3	4	5	6	7
DACCA—*concld.*								
Mymensingh ..	Kishorganj	0·02	0·05	0·20	..	0·28	0·02	..
	Atia (Tangail)	..	..	0·40	0·15	0·70	..	..
	Sariabari	0·20	..	..	0·21	..	..	..
	Mymensingh (Observatory) ..	0·02	0·02	0·12	0·03	0·35	0·21	0·22
	Jamalpur	..	0·18	0·11	0·27	0·16	0 10	0·30
	Netrokona	0·05	0·18	0·10	0·57	0·05	0·17	0·20
	Pingna*							
	Durgapur	..	0·43	0·50	0·32	1·14	..	2·00
	Sherpur (Town)	..	0·20	..	..	0·21	0·32	0·31
	Dewanganj	..	0·05	..	..	0·45	0·33	1·00
	Nalitabari	..	..	0·25	0·45	..	..	0·60
Faridpur	Madaripur	1·25	0·13	0·97	0·65	0·15	..	0·07
	Faridpur (Observatory) ..	0·30	0·16	0·55	0·30	0·20	0·20	0·02
	Rajbari (Goalundo) ..	0·10	0·59	0·59	0·04	0·02	0·22	0·03
	Haridaspur	1·38	0·71	0·85	0·54	0·03	0·03	0·87
	Takerhat	0·14	1·71	0·12	0·19	0·04	..	0·27
	Bhanga	0·15	0·30	0·18	0·07	0·20	0·04	0·40
	Pangsa	0·17	0·22	0·15	0·25	0·35	0·18	0·13
	Baliakandi	0·17	..	..	0·58	..	..	0·27
	Bhusna	0·29	0·26	0·18	0·28	0·19	0·11	0 09
	Palong	..	0·22	..	0·71	0·21	..	0·76
Bakarganj	Patuakhali	1·31	1·07	0·50	3·68	1·08	0·20	0·32
	Barguna	1·10	0·20	2·50	0·55	1·32	0·83	0·46
	Pirojpur	0·41	0·47	..	1·32	0·07	0·04	0·40
	Barisal (Observatory) ..	0·25	0·43	0·93	0·52	0·33	0·07	0·20
	Gaurnadi*							
	Bhola	0·46	0·25	0·82	0·53	0 31	0·30	0·05
	Daulatkhan	1·13	0·20	0·62	..	0·71	0·23	0·08
	Bauphal	0·12	..	0·58	0·24	0·30	0·75	1 36
CHITTAGONG.								
Chittagong ..	Cox's Bazar (Observatory) ..	0·50	0·48	1·41	2·64	2·24	2·25	0·68
	Chittagong (Observatory) ..	0·23	0·22	0·02	0·30	0·23	1·15	5 05
	Kutubdia	0·40	1·92	..	1·45	1 60	1·30	2·70
	Satkania	0·35	0·47	0 30	0·75	0·90	0·80	1·15
	Kodala*							
	Mirsarai	0·40	..	0 24	0 30	1·25	2·10	1·75
Tippera	Comilla (Observatory) ..	0·03	..	0·15	..	0·47	0·20	0·35
	Chandpur	0·48	0·24	0·31	0·08	0·18	0·27	0·35
	Brahmanbaria	0·30	..	0·05	0·04	.. ..	0·24	0·76
	Ramchandrapur	..	..	..	..	0·55	0·80	1·20
	Nasirnagar	..	..	0·91	..	..	..	2·13
	Daudkandi	..	..	..	..	..	..	4·40
	Kasba	0·20	..	0·20	..	0·05	0·02	2·00
	Laksam	..	..	0·50	0·30	0·40	1·22	0·60
Noakhali ..	Noakhali (Observatory) .	0·68	0·08	0·04	0·42	0·43	0·10	..
	Feni	..	..	..	0 06	0·09	0·21	1·12
	Harishpur	0·70	0·90	..	0 62	0·82	3·00	4 06
	Ramganj	0·25	0·40	0·20	0·75	1·05	..	..
	Chhagalnaya	0·50	0·34	..	..	0·74	2·45	6 48
	Hatiya	1·34	0·58	0·15	0·60	0·46	0·54	0·62
	Lakhimpur	1·83	..	..	..	0·70	..	..
Chittagong Hill Tracts	Rangamati	0·28	0·02	0·07	1·03	0·20	0·35	4·32
	Bandarban	0·06	..	0·13	0·15	0 58	0·90	1 76
	Baikal	..	..	0·56	1·45	..	0·43	2·22
	Mahalchari	..	..	0·33	0·15	0·40	1·75	2·60
	Lama	0·43	0·22	0·40	0·65	0·82	1·10	1·41
	Ramgarh	0·07	0·26	0·09	0·04	0·07	0 45	5·53
	Manikseri	..	0·20	..	0·65	0·65	2·00	2·30
	Dighinala	..	..	0·12	0·23	0·11	0 55	1·70
	Mainmukh	0·20	0·84	0·12	0·10	0 12	0·16	2·19
	Kaptai	0·05	0·02	0·04	0·02	0·20	0·50	3 40
	Panchhari	0·17	..	..	0·27	0·08	0·60	1·10
	Nakhyongchhari	1·23	0·88	1·00	2·10	1·81	4·10	3·43
Hill Tippera ..	Agartala	..	0·30	..	..	0·17	1·43	2·50
Cooch Behar ..	Dinhata	0·84	..	0·16	..	..	0·30	0 64
	Cooch Behar (Observatory) ..	0·26	0·19	0·16	..	..	3·89	2·13
	Mekhganj	0·25	0·37	..	..	..	3·15	2·15
	Mathabhanga	0·90	0·02	0·02	..	0·01	0·89	1·83
	Kulbaria (Tufanganj) ..	0·20	..	0·18	..	..	1·00	2·37

* Not reported.

FOR THE MONTH OF JULY 1931.

8	9	10	11	12	13	14	15	16	17	18	19	20
1·02	0·18	1·85	1·10	0·92	1·41	0·02	0·26	0·04	..	0·05	0·18	0·37
0·05	0·05	1·25	1·20	0·06	..	..	0·40	2·50	0·10	0·05	0·05	1·25
2·78	0·09	0·71	0·21	0·06	1·49	..	0·31	..	0·12	..	.	0·03
0·03	..	0·28	1·34	4·05	0·68	0·01	1·13	6·13	0·10	0·24	..	1·86
0·05	..	1·05	0·59	0·39	0·06	0·06	0·08	0·12	0·4	0·27	0·61	0·21
0·47	1·70	1·55	2·90	0·80	0·70	0·22	0·10	1·45	0·24	0·05	0·20	1·54
2·40	1·50	1·55	0·50	0·50	0·45	1·50	2·31	0·27	0·50	1·22	2·00	1·00
0·23	..	1·47	7·10	1·85	..	..	0·68	..	0·40	0·21	0·40	0·36
0·50	1·50	3.15	0·40	0·50	0·40	..	0·25	0·30	0·10	..	3·20	2·20
0·30	..	6·50	4·50	..	..	..	0·30	0·50	0·20	0·20	1·00	1·50
0·25	0·07	0·51	4·18	0·31	0·13	..	0·27	0·75	0·48	0·05	..	..
0·01	0·06	0·10	1·40	0·10	1·00	0·04	0·18	1·55	1·00	0·30	0·50	0·60
..	0·79	0·01	1·12	1·36	0·30	0·08	0·07	0·12	1·22	0·04	..	2·05
0·59	0·53	0·18	0·17	0·14	0·36	0·22	1·01	0·79	0·09	0·85	0·22	0·81
1·07	0·35	3·85	0·28	0·27	0·04	0·27	0·22	0·21	0·13	0·02	0·75	0·50
0·20	0·15	1·85	0·12	0·10	..	0·05	0·20	..	0·10	..	..	0·65
0·23	0·12	0·18	0·11	0·25	0·27	0·35	0·15	0·28	0·42	0·24	0·17	0·32
0·09	1·14	0·17	0·33	1·71	..	0·09	0·07	0·27	0·13	0·97	1·26	0·34
0·08	0·15	0·25	1·95	0·15	0·32	0·29	0·13	2·51	0·53	0·64	0·58	0·03
1·91	..	0·61	3·46	..	..	..	..	0·51	0·40	0·10	0·71	1·08
2·97	1·90	0·36	3·57	3·52	0·38	0·19	0·68	2·72	0·38	0·39	0·87	1·42
4·46	1·32	0·65	0·50	0·60	0·10	0·35	0·25	2·20	0·11	0·25	1·10	0·12
2·11	0·32	0·61	0·15	0·06	0·51	0·45	0·61	3·79	0·07	0·4	0·22	0·37
1·00	0·54	0·74	1·37	1·33	0·25	0·09	0·22	1·00	0·56	0·27	0·12	0·33
0·58	0·82	0·10	1·40	0·55	0·39	0·07	0·30	0·95	0·32	0·85	0·05	0·11
0·84	0·37	..	0·55	0·46	..	0·23	0·44	0·82	0·22	0·22	0·71	0·25
0·35	2·15	0·85	1·10	0·72	1·06	2·37	1·06	1·30	0·66	0·65	0·72	1·21
7·61	2·74	1·41	1·46	..	0·82	0·52	0·37	4·83	1·34	1·29	0·46	0·87
5·60	2·70	2·24	0·10	0·03	..	0·10	1·25	0·22	0·14	0·47	1·85	1·40
4·05	0·69	2·00	..	0·09	0·14	0·32	0·55	1·70	2·20	1·37	2·02	0·82
0·65	0·48	0·30	0·75	0·25	0·28	0·10	0·15	0·26	0·70	0·85	0·83	0·79
2·00	1·25	2·25	0·75	1·10	0·10	..	0·10	0·20	1·17	0·50	1·40	2·82
3·05	0·07	1·79	2·70	1·64	0·11	0·22	0·07	0·10	0·05	0·60	0·15	1·32
0·78	0·02	0·44	1·83	0·79	0·03	0·05	0·30	0·33	0·20	0·11	0·45	0·64
0·85	0·62	0·42	0·05	0·15	0·05	0·02	0·19	0·05	..	0·06	0·08	2·41
3·78	0·36	0·64	4·30	1·05	0·30	..	0·40	..	0·10	0·35	0·80	0·40
..	0·26	0·97	..	1·45	..	..	..	..	1·10	..	..	2·55
0·13	0·47	0·68	..	3·37	..	0·19	0·13	0·80	..	1·02	0·46	0·80
1·11	0·73	0·56	1·60	2·20	..	0·15	0·10	0·04	..	0·63	..	2·93
1·00	0·32	0·50	0·82	1·42	0·09	1·20	0·70	0·45	1·12	0·60	..	1·25
1·36	1·01	0·16	0·48	0·86	..	0·36	0·67	0·66	0·87	0·37	0·14	0·72
3·41	2·22	..	0·80	1·83	..	0·18	0·74	1·14	0·73	0·49	1·54	1·18
..	1·20	0·13	0·24	0·41	1·10	2·50	..	1·22	1·23	0·10	0·50	2·10
..	0·73	..	1·36	3·75	0·30	0·30	0·70	1·40	1·26	0·40	0·14	0·62
1·60	0·40	0·11	1·70	..	..	0·35	0·25	0·10	0·63	2·30	3·10	0·55
1·94	0·85	2·50	0·30	3·18	0·15	..	0·85	1·55	1·92	0·46	0·28	1·05
..	0·90	..	..	1·38	0·45	..	..	1·75	1·10	..	..	..
2·75	1·10	0·91	0·03	0·14	0·72	0·18	0·50	0·08	0·09	0·37	0·74	0·32
2·41	0·50	2·86	0·92	0·48	0·48	0·39	0·41	0·40	0·10	0·48	0·97	2·35
1·48	1·04	1·38	0·10	0·15	0·39	0·12	0·98	0·05	.	0·08	0·44	0·07
0·95	0·61	0·58	..	0·23	0·06	0·50	0·25	..	0·80	1·11	1·14	3·77
4·00	1·06	1·65	0·23	0·98	0·10	0·34	1·02	1·30	0·39	0·40	1·11	1·10
5·82	2·68	1·74	0·06	0·12	0·19	0·09	0·07	0·01	..	0·12	0·68	1·04
1·00	1·30	..	..	0·40	..	0·15	0·10	0·20	0·10	2·10	2·10	4·95
0·81	0·42	1·75	..	0·08	0·17	0·13	0·32	..	0·11	0·52	0·39	1·54
2·68	0·60	1·00	0·32	0·26	0·61	0·11	0·50	0·06	0·03	0·70	0·53	0·97
1·59	1·52	1·53	2·10	1·04	2·05	1·04	0·54	0·02	..	1·40	0·40	0·50
0·79	0·90	0·72	0·47	0·27	0·13	..	..	0·14	0·07	1·04	1·80	1·69
10·45	1·64	1·61	2·70	0·85	0·10	0·70	0·94	1·71	0·55	0·29	1·24	0·43
0·48	0·91	0·96	0·35	0·16	0·14	..	..	..	0·16	0·04	1·66	1·20
0·70	1·12	2·06	0·56	0·44	..	..	..	0·86	..	0·08	..	1·20
0·47	1·48	0·72	0·63	0·26	0·06	0·42	0·57	0·71	0·26	0·07	0·11	1·09
..	2·00	2·50	6·10	1·98	..	1·45	0·15	1·25	0·25	0·02	0·08	0·45
0·08	0·93	2·67	1·71	0·17	0·31	0·02	0.13	0·14	0·09	0·44	0·07	1·23
0·70	1·74	2·73	0·91	0·77	0·12	0·95	0·11	0·17	0·02	..	0·09	0·68

DAILY RAINFALL RECORDED IN BENGAL

Division and district.	Station.	21	22	23	24	25	26	27
DACCA—*contd*								
Mymensingh ..	Kishorganj	0·42	1·85	1·30	0·10	0·15	0·12	..
	Atia (Tangail)	0·30	0·20	0·25	..	..	..	..
	Sarisabari	0·65	0·41	0·16	0.30	0·36	..	0·05
	Mymensingh (Observatory) ..	1·48	1·18	0·20	0·33	0·65	0·05	0·08
	Jamalpur	1·91	0·50	0·31	0·19	1·41	..	..
	Netrokona	0·60	1·53	0·53	0·24	0·87	0·16	0·82
	Pingna*							
	Durgapur	1·03	2·35	2·50	1·05	2·16	1·12	1·30
	Sherpur (Town)	..	1·20	0·90	0·45	0·42	0·30	0·11
	Dewanganj	0·25	0·15	1·15	2·40	..	..	0·90
	Nalitabari	1·50	2·00	0·95	1·10	0·10	0·50	0·60
Faridpur ..	Madaripur	0·45	2·07	0·08	0·62	0·43	0.35	0·24
	Faridpur (Observatory) ..	0·30	0·40	1·20	0·75	0·10	..	..
	Rajbari (Goalundo) ..	0·12	0·43	1·24	..	0·21	0·65	0·15
	Haridaspur	1·87	0·29	0·38	0·04	0·05	0·05	2·30
	Takerhat	2·05	0·21	0·55	0·41	0·14	0·02	0·42
	Bhanga	1.75	0·15	..	0·45	0·27	0·45	..
	Pangsa	0·16	..	..	0·07	0·17	0·21	0·09
	Baliakandi	0·57	3·40	0·34	..	0·63	0·15	0·41
	Bhusna	0·04	0·58	2·24	0·18	0·17	..	..
	Palong ..	1·10	1·55	0·61	0·30	0·61	0·16	..
Bakarganj ..	Patuakhali	1·26	3·84	1·13	0·62	0·57	0·08	0·42
	Barguna	0·30	1·71	1·30	0·16	0·45	0·10	0·15
	Pirojpur	0·69	2·34	0·88	0·38	0·73	0·44	0·60
	Barisal (Observatory) ..	0·36	1·53	0·53	0·22	0·03	0·57	0·10
	Gaurnadi*							
	Bhola	0·95	3·07	0·75	0·50	0·22	..	0·16
	Daulatkhan	0·26	1·00	1·75	0·59	0·10	0·15	1·02
	Bauphal	0·18	1·06	0·85	2·11	1·17	1·27	0·10
CHITTAGONG.								
Chittagong ..	Cox's Bazar (Observatory) ..	0·55	1·85	0·82	0·12	0·08	..	0·55
	Chittagong (Observatory) ..	4·34	0·72	2·72	0·06	..	..	0·06
	Kutubdia	1·25	0·80	3·52	0·16	..	..	..
	Satkania	0·57	0·40	0·65	1·31	2·55	0·95	0·85
	Kodala*							
	Mirsarai	2·30	2·80	0·18	..	..	0·80	1·07
Tippera ..	Comilla (Observatory) ..	2·25	1·10	0·45	0·74	0·05	0·42	0·70
	Chandpur	0·43	2·12	0·20	0·14	0·12	0·17	0·90
	Brahmanbaria	0·60	0·55	..	0·05	0·15	..	1·30
	Ramchandrapur	1·45	0·60	0·50	..	0·30	0·20	2·80
	Nasirnagar	2·70	..	..	0·95	..	..	..
	Daudkandi	0·82	0·18	0·27	0·35	..	4·43	1·03
	Kasba	1·12	1·63	0·64	..	0·06	..	0·26
	Laksam	0·70	1·30	0·30	0·20	1·00	1·05	1·05
Noakhali ..	Noakhali (Observatory) ..	0·52	1·40	0·35	1·00	0·07	0·08	0·13
	Feni	0·37	1·06	3·28	2·21	0·52	0·38	0·39
	Harishpur	2·20	2·10	2·30	1·15	0·05	0·55	0·10
	Ramganj	0·52	1·60	..	0·62	0·20	1·40	1·20
	Chhagalnaya	3·91	1·30	1·52	0·11	..	..	0·60
	Hatiya	0·25	1·75	1·43	0·16	0·41	0·22	0·22
	Lakhimpur	0·90	..	0·21	1·20	1·10	..	0·50
Chittagong Hill Tracts	Rangamati	1·55	0·24	0·72	0·03	0·05	0·08	0·83
	Bandarban	0·49	0·40	0·72	0·02	0·06	0·38	0·48
	Barkal	0·97	0·38	1·35	..	..	0·55	0·40
	Mahalchari	1·48	0·25	0·22	0·15	..	..	0·05
	Lama	0·81	0·75	1·05	..	0·19	0·40	0·51
	Ramgarh	1·15	2·51	3·85	1·78	0·02	..	0·35
	Manikseri	1·97	1·61	..	..	..	0·40	0·20
	Dighinala	2·20	2·57	1·50	..	..	0·24	0·45
	Mainmukh	1·82	2·83	2·62	0·19	..	0·10	0·10
	Kaptai	2·51	1·05	1·01	0·51	0·51	1·58	1·52
	Panchhari	1·62	0·60	0·70	..	..	..	..
	Nakhyongchhari	0·45	1·09	1·08	0·05	0·11	0·30	0·41
Hill Tippera ..	Agartala	1·40	0·20	0·09	0·09	0·02	..	1·40
Cooch Behar ..	Dinhata	0·46	1·64	4·36	4·70	4·76	2·56	0·82
	Cooch Behar (Observatory) ..	0·57	3·53	3·58	6·07	6·03	2·39	0·76
	Mekliganj	1·80	3·30	6·35	6·28	3·60	3·00	3·15
	Mathabhanga	0·48	5·85	5·68	6·91	3·32	6·75	7·13
	Fulbaria (Tufanganj) ..	0·82	3·22	3·00	5·10	1·91	0·58	0·50

* Not reported.

DACCA, *the 18th August 1931.*

FOR THE MONTH OF JULY 1931.

28	29	30	31	Number of rainy days.	Average number of rainy days.	Total rainfall for the month.	Normal rainfall for the month.	Heaviest rainfall during month.	Total rainfall from 1st June to 31st July 1931.	Normal rainfall from 1st June to 31st July 1931.
0·72	0·65	3·35	1·18	20	17·1	17·90	15·46	3·35	35·05	34·75
..	0·25	0·25	0·50	15	13·8	10·26	11·08	2·50	16·30	23·08
..	..	3·52	1·04	16	16·6	13·60	13·45	3·52	22·98	26·54
..	0·12	3·24	0·34	21	19·8	18·49	16·46	4·05	35·21	35·17
..	0·09	3·75	1·58	22	17·0	15·96	13·79	3·75	27·65	29·15
0·06	1·43	0·34	0·85	27	21·4	21·03	20·36	2·90	44·15	44·02
					13·1		10·53			24·28
2·60	1·00	2·72	0·60	29	21·8	39·02	30·80	2·72	63·70	57·79
..	1·60	3·90	3·50	22	18·3	26·12	16·84	7·10	40·81	32·19
..	0·15	0·10	..	21	14·3	19·52	14·75	3·20	29·12	30·98
0·50	0·45	1·25	0·25	23	18·8	25·50	20·33	6·50	35·55	41·94
1·02	0·13	0·12	0·05	22	17·1	15·78	12·60	4·18	24·34	25 72
..	0·40	0·75	0·80	24	17·6	13·27	12·83	1·55	23·99	26 19
0·18	0·71	0·07	1·80	20	18·5	14 31	11·15	2·05	26·61	23·45
0·04	0·18	0·07	0·07	22	17·2	13·76	13·33	1·87	16·12	26·58
0·02	0·41	0·07	0·27	24	17·1	15·00	13·31	3·85	19·00	30 72
..	0·95	0·35	..	20	16·4	9·13	11·75	1 85	12·34	25·73
0·13	..	0·05	0·98	25	18·4	6·40	12·43	0·98	12·67	27 60
..	0·53	..	2·01	20	17·2	15·69	12·66	3·46	22·79	27·67
..	0·65	0·50	0·70	24	17·0	14·07	11·07	2·51	16·41	23·96
1·31	0·50	..	1·21	21	19·9	18·03	17·40	3·46	21·72	36·14
2·46	1·32	2·35	0·68	30	22·3	42.33	22·07	3·84	59·46	44·01
1·09	0·86	2·45	0·50	31	21·3	28.10	22·58	4.46	35·73	44·28
1·21	0·20	0·55	0·43	26	20·1	20·54	15·92	3.70	35·61	31·21
0·15	0·23	0·43	0·25	28	20·4	14·95	15·60	1·53	23.88	31·93
					18·7		13·93			27.70
0·36	1·00	1·47	0·45	28	21·5	19·04	17·79	3·07	30·67	38·47
3·05	2·78	1·50	1·07	27	20·2	21.35	19·31	3·05	38·57	40·53
0·05	2·11	1·05	2·85	29	21·1	30·32	20·04	2·85	39·17	38·12
3·31	6·26	2·97	0·73	28	22·1	51·16	34·89	7·61	66·50	66·62
2·91	2·98	2·11	1·48	24	18·6	40·68	22·40	5·60	51·03	43·19
1·21	2·59	0·95	1·80	25	20·5	37·60	28·85	4·05	50·20	53·09
1·60	1·75	3·10	0·17	31	19·5	25·01	25·38	3·10	35·06	45·77
					20·7		20·62			38·74
3·25	4·00	0·48	..	26	29·3	34·56	26·41	4·00	48·61	49 79
3·72	1·87	0·84	0·45	25	18·3	26·56	15·47	3·72	38·23	33·69
0·18	0·04	0·57	0·92	26	19·3	13·67	14.40	2·12	18·92	29·07
0·19	0·05	..	0·91	15	16·1	10·14	11·16	2·41	19·87	26·91
0·20	0·85	0·80	0·55	24	14·4	23·38	13·35	4·30	29·58	30·08
0·12	..	2·03	..	11	15·6	15·17	12·19	2·70	..	27·78
0·25	1·09	1·14	0·85	20	15·7	15·86	13·33	4·40	29·39	27·72
0·55	0·25	0·45	0·15	20	15·9	17·63	11·69	2·93	26 14	26·99
0·15	1·70	0·90	0·54	27	17·2	21·38	18·41	1·70	25·62	34 98
0·48	0·77	4·78	0·30	26	22·6	19·89	24·36	4·78	30·31	47·63
1·21	1·47	2·44	0·38	24	21·4	30.14	24·29	3·41	48·82	47·18
4·00	2·85	2·95	0·55	27	21·0	39·63	27·73	4·06	54.94	49·41
2·00	0·88	0·95	0·12	26	19·9	23·10	17·12	3.75	31·77	34·27
2·33	2·35	0·27	..	24	19·7	33·99	23 94	6·48	50·66	44·45
1·45	2·65	1·15	0·25	30	22·7	29·26	28·01	3·18	43·57	50·67
..	..	2·25	..	13	20·0	14·27	19·37	2·25	24·28	40·17
0.50	1 95	0·56	1·16	23	21·9	21·85	18·94	4·32	32·84	36·79
1·32	2·07	1·20	0·65	27	21·4	24·12	21·99	2·86	33·66	42·06
0·21	0·72	0·78	1·17	23	22·7	18·07	21·10	2·22	28·80	39·74
0·50	0·72	0·42	0·15	24	20·4	19·77	17·86	3·77	33·22	33·25
2·48	1·30	1·05	2·45	30	24·6	30·86	34·46	4·00	42·61	61·26
0·38	0·12	2·13	3·86	20	29·4	35·28	18·74	5·82	51·44	36·07
..	3·00	1·00	..	21	(n)	26·68	(n)	4·95	42·92	(n)
..	0·73	0·97	0·39	24	(n)	18·60	(n)	2·57	..	(n)
0·44	0·93	0·28	0·79	28	(n)	22·20	(n)	2·83	38·04	(n)
1·32	1·42	1·32	1·13	25	(n)	31·83	(n)	3·40	41·20	(n)
0·15	0·65	1·28	..	20	(n)	15·24	(n)	1·80	25·28	(n)
3·14	4·75	2·31	0·63	30	(n)	53·18	(n)	10·45	63·39	(n)
0·15	1·05	0·11	..	19	16·7	14.97	12·10	2.50	28·51	27·51
0·38	1·86	0·20	..	21	17·2	30·70	19·97	4·76	65·08	45·96
0·67	2·55	2·63	0·09	26	19·0	42·35	28·11	6·07	71·87	60·81
0·32	2·45	2·50	0·08	23	18·9	54·98	24·04	6·35	90 80	49·10
0·59	1·12	0·05	0·44	22	18·8	49·98	26·23	7·13	84 98	54·51
1·00	0·58	0·13	0·08	24	18·9	29·66	28·94	5·10	70·76	58·04

(n)—Not ascertained.

J. C. Roy, *for Director of Agriculture, Bengal.*

IRRIGATION DEPARTMENT, BENGAL.

Abstract statement showing the approximate volume of traffic and the tollage on canals in Bengal classed as Major Works and Minor Works and Navigation for the month of May 1931 as compared with the corresponding month of the previous year.

Canals.	1931-32.					
	Weight of cargo.		Rafts.		Tollage.	
	During the month.	To end of the month.	During the month.	To end of the month.	During the month.	To end of the month.
	Tons.	Tons.	No.	No.	Rs.	Rs.
Major Works.						
Midnapore Canal	2,110	4,170	....	....	1,664	3,813
Hijili Tidal Canal	7,321	14,347	250	550	10,560	20,539
Total ..	9,431	18,517	250	550	12,224	24,352
Minor Works and Navigation.						
Calcutta and Eastern Canals ..	28,236	53,954	1,425	2,615	18,760	36,506
Tolly's Nala	19,430	45,005	33,140	53,100	6,287	14,466
Madaripur Bil Route	26,842	40,681	1,110	3,670	11,442	19,587
Total ..	74,508	1,39,640	35,675	59,385	36,489	70,619
Magrahat Channels	1,889	6,206	470	1,030	615	1,263
Orissa Coast Canal	3,541	7,358	750	6,425	2,629	5,511
GRAND TOTAL ..	79,938	1,53,204	36,895	66,840	39,733	77,393

Canals.	1930-31.					
	Weight of cargo.		Rafts.		Tollage.	
	During the month.	To end of the month.	During the month.	To end of the month.	During the month.	To end of the month.
	Tons.	Tons.	No.	No.	Rs.	Rs.
Major Works.						
Midnapore Canal	4,090	7,692	125	1,600	3,494	7,071
Hijili Tidal Canal	331	860	....	95	1,396	2,192
Total ..	4,421	8,552	125	1,695	4,890	9,263
Minor Works and Navigation.						
Calcutta and Eastern Canals ..	20,988	60,615	36,027	78,278	23,077	44,775
Tolly's Nala	20,499	41,142	23,900	42,600	6,945	13,551
Madaripur Bil Route	64,446	75,924	4,606	5,616	20,476	27,057
Total ..	1,14,933	1,77,681	64,533	1,26,494	50,498	85,383
Magrahat Channels	2,433	5,080	534	2,378	942	1,521
Orissa Coast Canal	2,819	5,061	450	5,650	2,547	4,671
GRAND TOTAL ..	1,20,185	1,87,822	65,517	1,34,522	53,987	91,575

Canal.	May 1931.			
	Tollage, 1931-32.		Tollage, 1930-31.	
	During the month.	To end of the month.	During the month.	To end of the month.
	Rs.	Rs.	Rs.	Rs.
Sundarbans Steamer Route ..	4,970	9,490	4,806	9,198

B. L. SUBARWAL,

Personal Assistant to the Chief Engineer to the Government of Bengal.

CALCUTTA, *the 19th August 1931.*

Statement showing the gauge readings at Dacca Waterworks on the river Buriganga for the week ending 15th August 1931.

Date.	At highest water.		At lowest water.		Commencement of—		Remarks.	
	Time.	Reading.	Time.	Reading.	Ebb tide.	Flow tide.	At 7 a.m.	At 5 p.m.
1931.								
9th August ..							21·4	21·45
10th „ ..							21·4	21·45
11th „ ..							21·4	21·4
12th „ ..	Tide is not perceptible.						21·4	21·4*
13th „ ..							21·4	21 4
14th „ ..							21·4	21·45
15th „ ..							21·55	21·575

B. M. on settling tank 39·49 O. M. S. L. Zero is at O. M. S. L.
* There is a sign of little decrease of level, but it is not worth noting.

Notable high and low water-levels of previous years.

		Taken at high tide.			Taken at low tide.
27th August	1906 ..	70·5	23rd February	1907 ..	51·06
5th September	1909 ..	66·86	13th „	1908 ..	51·06
10th August	1910 ..	69·86	12th March	1912 ..	51·06
1st „	1911 ..	68·46	6th „	1914 ..	50·60
13th „	1912 ..	67·16	22nd February	1915 ..	50·30
31st „	1915 ..	69·7	15th „	1916 ..	50·60
8th „	1916 ..	68·1	3rd March	1917 ..	51·0
12th „	1917 ..	67·1	21st February	1918 ..	51·40
13th „	1918 ..	69·12	26th „	1919 ..	50·4
2nd „	1919 ..	66·8	18th „	1920 ..	50·9
8th September	1920 ..	66·9	19th „	1921 ..	50·9
28th July	1921 ..	68·4	8th March	1922 ..	51·05
10th August	1922 ..	68·00	14th „	1923 ..	50·8
31st July	1923 ..	66·15	16th February	1924 ..	50·50
29th August	1924 ..	68·82	5th March	1925 ..	50·9
8th September	1925 ..	68·52	9th February	1926 ..	2·2
15th August	1926 ..	19·6	27th „	1927 ..	2·10
17th September	1927 ..	18·70	16th „	1928 ..	2·2
22nd August	1928 ..	20·0	21st „	1929 ..	2·0
13th July	1929 ..	17·8	24th „	1930 ..	2·3
12th September	1930 ..	18·65			

N. B.—Zero of the gauge at Dacca Waterworks prior to 11 a.m. on the 8th January 1926= −48·51 with reference to P. W. D. datum.
Zero of the gauge at Dacca Waterworks since 11 a.m. on the 8th January 1926=0·00 with reference to P. W. D. datum.

W. R. Robson, *Executive Engineer,*
Khulna Division.

Khulna, *the 22nd August 1931.*

Statement of weekly gauge readings on the river Ganges at Rampur Boalia for the week ending the 15th August 1931.

Date.	Hour.	Height of surface above zero of gauge.	Height of surface above P. W. D. datum.	Height of surface above P. W. D. datum on the same date of last year.	Remarks.
1931.					
9th August ..	7 a.m.	....	57·25	56·40	Value of zero = 0·00 P. W. D.
10th „ ..	7 „	....	57·60	56·00	
11th „ ..	7 „	....	57·95	55·90	Zero of gauge referred to B. M. on Rajshahi College step ; value 64·73.
12th „ ..	7 „	....	58·50	56·60	
13th „ ..	7 „	....	58·85	57·50	
14th „ ..	7 „	....	59·20	58·10	
15th „ ..	7 „	....	59·45	58·60	

Highest recorded level on 26-8-1879=64·24.

Lowest recorded level on 25-4-1884=32·62.

P. C. Basu, *Subdivisional Officer,*
Irrigation Department, Rajshahi.

Rampur Boalia, *the 15th August 1931.*

DISTRICT REPORTS ON WEATHER AND CROPS.

For the week ending on the 19th August 1931.

Summary.—During the week the rainfall was generally light to moderate. Transplantation of winter paddy seedlings continues favourably except in the flooded tracts of East and North Bengal. Reaping of jute and other *bhadoi* crops is progressing in East and North Bengal In West Bengal the operation continues in places. Damage to the standing crops continues to be reported from the waterlogged tracts of East and North Bengal. Flood water is gradually subsiding. Distress continues in parts of Nadia and Murshidabad where the number of persons attending the test relief works in the different centres was 1,046 and 2,717 respectively. The number of persons gratuitously relieved was 239 in Murshidabad. Gratuitous relief is also being given in Nadia. The average price of common rice for the province has risen by about 0·41 per cent. as compared with that of the previous week.

Serial No.	District and subdivision.	Rainfall.	Price of common rice, in seers, per rupee.		Character of the weather, condition of crops, etc.
			This week.	Previous week.	
1	2	3	4	5	6
		Inches.			
1	24-Parganas ..	1·63	9½	9½	Weather seasonable. Condition of jute plants is healthy. No damage reported. Height of jute plants is 10 to 12 feet in Baraset. Steeping water is ample except in Diamond Harbour. No record of river level. Harvesting has commenced every where.
	Diamond Harbour.	2·87	10½	10½	
	Barrackpore ..	3·94	8½	8½	
	Baraset ..	2·65	9	9	
	Basirhat ..	1·88	9	9	
2	Nadia ..	4·20	9½	9½	Weather seasonable. 1,046 persons attended test works during the week ending on the 15th August. Gratuitous relief continues in Kushtia subdivision. Condition of jute plants is fair. No damage. Steeping water is sufficient. Height of river is slightly higher than last year. Harvesting of jute has not yet commenced.
	Kushtia ..	2·38	10	10	
	Meherpur ..	0·56	8 13/16	8 13/16	
	Chuadanga ..	1·94	10	10	
	Ranaghat ..	2·00	10	10	
3	Murshidabad ..	0·49	10½	10½	Weather seasonable. Prospects of crops are fair. Fodder and water are sufficient. Cattle-disease is reported from thana Raghunathganj in Jangipur subdivision. 2,717 persons attended test works in Jellingi police-station during the week ending on the 15th August. 25 maunds 32 seers and 15 chittacks of rice at a cost of Rs. 85-0-0 were distributed among 43 men, 191 women and 5 children. Condition of jute is healthy. No damage. Steeping water is ample. Height of jute plant is 5½ to 8½ feet. Height of rivers is normal. Harvesting of jute has not yet commenced.
	Lalbagh ..	0·49	10½	10½	
	Jangipur ..	1·95	10½	10½	
	Kandi ..	1·42	12	12	
4	Jessore ..	2·22	9	9	Weather seasonable. Prospects of standing crops are good. Jute plants are healthy. No damage. Steeping water is sufficient. Height of rivers is lower than last year. Five annas crop harvested. Fodder and water are sufficient.
	Jhenidah ..	5·05	10	10	
	Magura ..	2·40	10	10	
	Narail ..	2·65	9½	9½	
	Bongaon ..	1·45	9½	9½	
5	Khulna ..	7·48	11	11	Weather seasonable ; its effects on crops are fair. Cattle disease is reported from thanas Syamnagar and Kaliganja. Fodder and water are sufficient. Export and import of rice continue slowly. Condition of jute is healthy. No damage. Steeping water is ample. Height of jute plants is 5 to 6 feet. River level 0·62 feet higher. Harvesting continues.
	Satkhira ..	2·31	10	(*n*)	
	Bagerhat ..	6·40	8½	8½	

(*n*) Not reported.

Serial No.	District and subdivision.	Rainfall.	Price of common rice, in seers, per rupee.		Character of the weather, condition of crops, etc.
			This week.	Previous week.	
1	2	3	4	5	6
		Inches.			
6	Burdwan ..	0·30	10	10	Weather seasonable. Fodder and water are sufficient. Condition of jute plants is healthy. No damage. Steeping water is ample. Height of jute plant is 4½ feet. River level is normal. Harvesting of jute has not commenced.
	Asansol ..	1·78	9	9	
	Katwa ..	2·84	11	11	
	Kalna ..	1·57	11	11	
7	Birbhum ..	1·27	13	12½	Weather hot and cloudy. Fodder and water are sufficient.
	Rampurhat ..	1·57	11	11½	
8	Bankura ..	3·21	11½	11	Weather seasonable. Prospects of standing crops are good. Fodder and water are sufficient.
	Vishnupur ..	3·00	11½	12	
9	Midnapore ..	2·07	13	13⅜	Weather cloudy. Fodder and water are sufficient. Cattle-disease is reported from Kharagpur.
	Contai ..	0·64	12	13	
	Tamluk ..	0·90	10½	10½	
	Ghatal ..	2·10	12½	13½	
	Jhargram ..	2·80	11¾	11¾	
10	Hooghly ..	2·24	9½	9	Weather seasonable. Fodder is sufficient. Growth of jute is satisfactory. No damage. Harvesting has not commenced. Steeping water is ample. Height of river is slightly higher than last year.
	Serampore ..	4·85	9¾	9¾	
	Arambagh ..	5·14	12½	12½	
11	Howrah ..	1·45	8	8	Condition of crops is fair. Transplantation of paddy is almost over. No import or export. Fodder and water are sufficient. Jute plant is healthy. No damage. Steeping water is ample. Height of jute plants is 6 feet. Height of river is lower.
	Uluberia ..	2·72	11	10¾	
12	Rajshahi (Rampur-Boalia).	4·57	10½	10½	Weather seasonable. Jute crop has been damaged in Nator subdivision by flood. Condition is fair in other parts. Floods are subsiding in Gurudaspur and Singra thanas. Prospects of standing crops are bad in Nator *bheel* areas. Eight annas crop is harvested.
	Naogaon ..	1·02	10¼	10¼	
	Nator ..	1·02	9¼	9	
13	Dinajpur ..	1·94	10	10	Prospects of standing crops are fair. Fodder and water are sufficient. Cattle-disease is reported from Balurghat police-station. Condition of jute plants is not so healthy. Growth is fair. No damage. Rainfall and steeping water are sufficient. Height of plants is 3½ to 4½ cubits. River level is higher. Harvesting continues.
	Thakurgaon ..	2·45	10	9	
	Balurghat ..	2·36	12	12	
14	Jalpaiguri ..	3·73	6	6	Present weather favourable. Fodder and water are sufficient. Condition of jute is not favourable. Steeping water is ample. About 2 annas crop is harvested.
	Alipur ..	3·20	6½	6½	
15	Darjeeling ..	4·52	7	7	Marua and paddy are growing. Potatoes and maize are being harvested. Fodder and water are sufficient. Cattle-disease exists at places. Condition of jute is good. No damage. Steeping water is ample. River level is normal. Harvesting of jute is partly finished.
	Kurseong ..	7·99	7	7	
	Siliguri ..	2·47	9	8½	
	Kalimpong ..	(*n*)	(*n*)	7	

(*n*) Not reported.

Serial No.	District and subdivision.	Rainfall.	Price of common rice, in seers, per rupee.		Character of the weather, condition of crops, etc.
			This week.	Previous week.	
1	2	3	4	5	6
		Inches.			
16	Rangpur ..	0·95	9	9	Weather seasonable. Prospects of crops are unsatisfactory in Gaibandha and Kurigram; elsewhere they are fairly healthy. Harvesting is going on. Steeping water is sufficient. Height of jute plants is between 5 to 6 feet. River level is higher than last year. Scarcity of fodder prevails in the flooded areas. Water sufficient. Test relief work is closed. 2,040 persons received gratuitous relief.
	Nilphamari ..	1·67	10	10	
	Kurigram ..	1·60	9¼	9⅞	
	Gaibandha ..	1·53	8½	9	
17	Bogra ..	1·73	10½	10½	Jute and *aus* paddy are being harvested. Flood water on the eastern side is subsiding steadily. Idea of giving paddy seed loan has been abandoned as too late. Money loan will be given throughout. Fields have not yet been completely out of water. Gratuitous relief is needed. Sanction for Rs. 80,000 more as agricultural loans received. Enquiries for its distribution are in progress. Test works and gratuitous relief stopped. Harvesting of jute and *aus* paddy continues on the western side.
18	Pabna ..	1·69	9½	9½	Export and import are normal. Prices are rising. Fodder is insufficient. Prospects of crops are extremely gloomy. Growth of jute is retarded. Eight annas crop has been damaged by flood. Height of jute plants is five and a half feet on an average. *Padma* level is 3 inches and *Jamuna* 6 inches hegher than last year. Ten annas crop is harvested. Prospects of jute crop and *aman* paddy are extremely gloomy.
	Sirajganj ..	1·00	9½	(*n*)	
19	Malda ..	1·05	11	10½	Weather seasonable. Some damage to *bhadoi* crops by flood is reported from Ratua, Harishchandrapur and part of Kharba thanas. Prospects of standing crops in other thanas are good. Transplantation of paddy continues. Fodder and water are sufficient. Damage to jute by flood is reported, Steeping water is ample. Height of rivers is 6 feet higher than last year. Harvesting has commenced. Cattle-disease is reported from Kaliachak and Harishchandrapur thanas.
20	Cooch Behar ..	2·80	9⅝	9⅝	Weather seasonable. Cutting, steeping and washing of jute are continuing. No damage to jute. Steeping water is sufficient. About three annas crop is harvested. Fodder and water are sufficient.
21	Dacca ..	5·17	9½	9½	Rainfall at North Sadar (Kapasia) 2·37. Weather seasonable. Condition of standing crops is not satisfactory. The jute crop has been damaged to a great extent especially in the Manikganj subdivision by flood. Steeping water is ample. Height of jute is between 3½ and 7 feet. Rainfall is heavy. River level is much higher than last year. Five annas crop is harvested. Fodder is insufficient. Water-hyacinth is serving the purpose of fodder in the flooded areas. Cattle-disease is reported from Narayanganj.
	Manikganj ..	4·58	9	7½	
	Narayanganj	5·48	10	10	
	Munshiganj ..	7·56	10	10	
22	Mymensingh ..	3·19	9	9	Weather seasonable. Prospects of standing crops are not good. Condition of jute is not satisfactory. Steeping water is sufficient. Height of jute plants is 4 to 6 cubits. River level is higher than last year by 16 inches. Eight annas crop is harvested. Water sufficient. Fodder is not available in some places of Jamalpur and Sadar.
	Jamalpur ..	1·90	9½	9½	
	Tangail ..	0·35	9	9	
	Netrakona ..	2·12	10	10	
	Kishorganj ..	2·44	9	10	

(*n*) Not reported.

Serial No.	District and subdivision.	Rainfall.	Price of common rice, in seers, per rupee.		Character of the weather, condition of crops, etc.
			This week.	Previous week.	
1	2	3	4	5	6
		Inches.			
23	Faridpur ..	1·84	9½	9½	Weather cloudy and unfavourable. Prospects of standing crops are unsatisfactory owing to floods. No import or export. Fodder is not sufficient. Jute plants are not healthy. Growth of jute is not satisfactory. Flood damaged the crop to the extent of two annas. Steeping water is ample. Height of jute plants is 6 to 7 feet. River level is much higher than previous year. Eight annas crop is harvested.
	Goalundo (Rajbari).	2·97	9	9	
	Madaripur ..	3·26	9¾	10½	
	Gopalganj (*a*)	5·86	9	(*n*)	
24	Bakarganj (Barisal).	3·48	9½	9½	Weather seasonable. Fodder and water are sufficient. Condition of jute is fair. No damage. Steeping water is ample. Height of plants is from 4½ to 7½ feet. River level is abnormally high owing to flood. Rainfall is a little above the normal. About eight annas crop is harvested.
	Pirojpur ..	4·00	10	10	
	Patuakhali ..	10·72	10	10	
	Dakshin Shabazpur (Bhola).	4·30	9	9	
25	Chittagong ..	5·15	10 11*	10 11*	Weather seasonable. Prospects of standing crops fair. Transplantation of *aman* crop and harvesting of *aus* crops are in progress. Cattle-disease is reported from Teknuf police-station. Fodder and water are sufficient. *Panga* salt sells at 16 seers per rupee at Sadar and at 13 seers per rupee at Cox's Bazar.
	Cox's Bazar ..	16·62	11	12	
26	Tippera (Comilla).	4·23	9	9	Prospects of crops are fair. Twelve annas jute crop is harvested. River level is much higher.
	Brahmanbaria	4·24	10	10	
	Chandpur ..	1·86	9½	9½	
27	Noakhali ..	2·63	10	10	Jute crop is almost harvested
	Feni ..	0·90	12	12	
28	Chittagong Hill Tracts.	2·10	12	11½	Weather seasonable.
29	Tripura State ..	4·62	8¾	8½	Weather seasonable. Cattle-pox exists at Sabroom. Cleansed cotton sells at Rs. 6 to Rs. 13½ per maund and jute at Rs. 2½ to Rs. 5 per maund. Condition of jute plants is fair. No damage. Steeping water is ample. Height of plants 4 to 10 feet. Rainfall is normal. One-anna crop has been cut.

(*n*) Not reported. * Burma rice.

(*a*) The rainfall at Haridaspur, which is very near to Gopalganj, is not shown here.

DACCA, *the 22nd August 1931.*

J. C. ROY, for *Director of Agriculture, Bengal.*

Wholesale prices-current of certain articles in the Calcutta mart of Bengal for the first half of August 1931.

Mart.	Wheat.			Raw cotton.		
	Present return.	Next preceding return.	Corresponding return of last year.	Present return.	Next preceding return.	Corresponding return of last year.
1	2	3	4	5	6	7
	Rs. A. P.	Rs. A. P.	Rs. A. P.	Rs. A. P.	Rs. A. P.	Rs. A. P.
Calcutta	3 2 0	3 0 0	4 6 0	16 8 0	18 0 0	18 0 0

Mart.	Coal.			Raw jute (weighted average).			*Gur* (sugarcane).		
	Present return.	Next preceding return.	Corresponding return of last year.	Present return.	Next preceding return.	Corresponding return of last year.	Present return.	Next preceding return.	Corresponding return of last year.
	8	9	10	11	12	13	14	15	16
	Rs. A. P.	Rs. A. P.	Rs. A. P.	Rs. A. P.	Rs. A. P	Rs. A. P.	Rs. A. P.	Rs. A. P.	Rs. A. P.
Calcutta	0 6 6	0 6 6	0 6 6	4 13 8	4 11 6	5 4 0	6 4 0	6 4 0	8 8 0

J. C. ROY, for *Director of Agriculture, Bengal*

DACCA, *the 22nd August 1931.*

Prices-current (retail) of common rice and salt in the districts of Bengal for the first half of August 1931.

Districts and Marts.	Quantity per rupee in seers of eighty tolas.								
	Common rice.						Salt.		
	Average.			Cheapest.					
	Present return.	Next preceding return.	Corresponding return of last year.	Present return.	Next preceding return.	Corresponding return of last year.	Present return.	Next preceding return.	Corresponding return of last year.
	S. Ch.	S. Ch.	S. Ch	S. Ch.	S. Ch.	S. Ch.	S. Ch.	S. Ch.	S. Ch.
Presidency Division.									
24-Parganas—									
1 Chetla Hat ..	9 4	10 0	6 11	10 8	11 0	7 4	16 0	16 0	14 0
2 Mogra Hat ..	11 7	11 7	7 9	13 5	12 5	8 0	14 8	14 8	15 8
3 Calcutta-Beliaghata	7 4	7 4	5 5	9 6	9 6	6 10	13 0	13 0	10 8†
Nadia—									
4 Goari	9 8	9 8	6 8	10 0	10 0	7 8	13 8	13 8	13 8
5 Ranaghat ..	10 0	10 0	7 4	10 4	10 4	7 8	13 0* / 16 0	13 0* / 16 0	13 0* / 16 0
Murshidabad—									
6 Berhampore ..	10 8	11 0	7 0	11 0	11 8	7 4	16 0	15 0	16 0
7 Kandi	12 0	12 0	7 12	12 8	12 8	8 0	16 0	16 0	15 0
8 Jangipur ..	10 8	10 0	8 0	11 0	10 8	8 4	16 0	16 0	16 0
Jessore—									
9 Sadar	9 0	9 0	7 0	11 0	11 0	8 0	16 0†	16 0†	16 0
10 Bongaon ..	9 8	10 0	7 0	10 8	11 0	8 14	13 0* / 16 0	13 0* / 16 0	13 0* / 16 0
Khulna—									
11 Sadar	11 0	11 0	6 0	12 0	12 0	7 0	16 0†	16 0†	14 8
12 Bagerhat ..	8 8	8 8	6 0	9 8	9 8	6 8	13 8	13 8	12 0
Burdwan Division.									
Burdwan—									
13 Sadar	8 14	8 15	8 0	(n)	11 0	9 0	16 0	16 0	16 8
14 Kalna	10 0	10 0	7 14	10 8	10 12	8 0	16 4	16 4	15 0
Birbhum—									
15 Suri	12 0	11 8	7 8	12 0	12 8	8 0	15 0	15 0	14 0
16 Rampurhat ..	11 0	11 8	8 0	12 0	12 0	8 8	16 0	16 0	16 0
Bankura—									
17 Sadar	10 0	11 0	8 12	11 0	13 0	9 0	15 0	14 0	15 0
18 Vishnupur ..	11 4	11 14	8 0	12 0	12 4	9 0	13 0	15 0	11 0

* Karkach. (n) Not reported.

N.B.—The prices of Karkach and Liverpool salt tally with each other in marts marked †.

Prices-current (retail) of common rice and salt in the districts of Bengal for the first half of August 1931.

Districts and Marts.	Quantity per rupee in seers of eighty tolas.								
	Common rice.						Salt.		
	Average.			Cheapest.					
	Present return.	Next preceding return.	Corresponding return of last year.	Present return.	Next preceding return.	Corresponding return of last year.	Present return.	Next preceding return.	Corresponding return of last year.
BURDWAN DIVISION—*concld.*	S. Ch.	S. Ch.	S. Ch.	S. Ch.	S. Ch.	S. Ch.	S. Ch.	S. Ch.	S. Ch.
Midnapore—									
19 Sadar	13 0	13 12	7 0	13 12	15 2	7 8	16 0	18 0	8 0
20 Contai	13 0	12 0	7 0	14 0	13 0	8 0	12 0	13 0	10 8
Hooghly—									
21 Sadar	9 4	8 14	7 8	11 0	11 7	8 8	14 0	14 4	13 8
22 Arambagh ..	12 0	11 8	8 0	12 8	12 8	8 8	12 0* / 16 0	12 14* / 15 0	12 0* / 14 8
Howrah—									
23 Sadar	10 0	10 0	6 0	11 4	12 8	7 8	16 0	16 0	16 0
24 Uluberia ..	11 0	10 12	7 0	13 0	12 0	8 8	18 8	18 8	16 0
RAJSHAHI DIVISION.									
Rajshahi—									
25 Rampur-Boalia ..	9 8	9 8	6 12	10 8	10 8	8 0	12 0†	12 0†	12 0
26 Nator	9 0	9 12	6 0	9 12	10 8	6 12	12 0†	12 0†	12 0†
27 Dinajpur—Railway Hat	9 0	12 0	7 0	11 0	13 0	7 8	14 0	14 0	14 0
28 Jalpaiguri—Sadar ..	9 0	9 0	6 0	10 0	10 0	7 0	12 8	13 0	11 0†
Darjeeling—									
29 Sadar	7 0	9 0	6 0	9 8	10 0	7 4	6 0* / 10 0	6 0* / 10 0	6 0* / 10 0
30 Siliguri ..	8 8	7 4	5 0	10 0	9 4	6 8	9 0* / 13 0	9 0* / 13 0	11 0
Rangpur—									
31 Sadar	9 0	9 4	5 0	10 4	10 4	6 6	12 0†	12 0†	9 0†
32 Nilphamari ..	10 0	11 0	6 4	10 0	11 0	(a)	15 0†	15 0†	10 0†
33 Bogra—Sadar ..	9 6	10 8	7 0	10 8	11 0	7 8	15 0	15 0	12 0†
Pabna—									
34 Sadar	9 4	10 0	6 4	11 0	11 12	6 8	12 8	12 8	12 8*
35 Serajganj ..	10 0	11 4	6 4	10 0	12 8	7 4	15 8*	15 0*	12 0*
Malda—									
36 Sadar	10 0	10 0	7 4	10 8	10 4	9 0	14 0*	14 0*	14 0
37 Balia—Nawabganj	10 4	10 6	8 4	10 4	(a)	9 0	14 8	15 8	15 0

(a) Not available.

* Karkach.

N.B.—The prices of Karkach and Liverpool salt tally with each other in marts marked †.

Prices-current (retail) of common rice and salt in the districts of Bengal for the first half of August 1931.

Districts and Marts.	Quantity per rupee in seers of eighty tolas.								
	Common rice.						Salt.		
	Average.			Cheapest.					
	Present return.	Next preceding return.	Corresponding return of last year.	Present return.	Next preceding return.	Corresponding return of last year.	Present return.	Next preceding return.	Corresponding return of last year.
	S. Ch.	S. Ch.	S. Ch.	S. Ch.	S. Ch.	S. Ch.	S. Ch.	S. Ch.	S. Ch.
Dacca Division.									
Dacca—									
38 Sadar	9 4	9 0	5 14	10 8	10 8	6 8	15 0	15 0	10 8
39 Mirkadim ..	11 0	11 0	7 0	12 0	11 8	7 4	15 0	14 0	14 8
Mymensingh—									
40 Nasirabad ..	9 0	9 0	5 14	11 0	11 0	6 2	12 0*	12 0*	12 0*
41 Netrakona ..	11 0	11 0	(n)	12 0	13 0	(n)	11 0* 13 0	13 0* 13 8	(n)
Faridpur—									
42 Sadar	10 0	9 12	6 0	11 0	10 12	6 8	12 0	12 0	11 0
43 Rajbari ..	9 0	9 0	6 0	10 8	10 8	7 0	12 0†	12 0†	12 0
Bakarganj—									
44 Barisal ..	9 8	9 8	5 12	10 8	10 8	6 0	16 0	16 0	14 0
45 Pirojpur ..	10 0	10 0	6 0	10 8	10 8	6 6	13 0†	13 0†	13 0
Chittagong Division.									
Tippera—									
46 Comilla ..	8 0	10 0	5 13	8 6	11 4	8 3	12 14	12 14	12 14
47 Chandpur ..	9 2	10 12	6 8	9 6	13 0	8 0	13 5	16 0	12 8
Noakhali—									
48 Kalitara Hat ..	9 0	9 0	5 5	10 0	10 0	6 0	13 0	13 0	13 0
49 Feni Hat ..	8 8	9 0	5 8	12 0	13 0	8 0	9 0* 13 0	7 0* 13 0	7 0* 13 0
Chittagong—									
50 Sadar	12 0	10 0	7 8	14 0	10 8	8 8	18 0	18 0	16 8
51 Cox's Bazar ..	9 0	10 0	5 0	10 0	11 0	(a)	14 0	15 0	13 0
52 Chittagong Hill Tracts —Rangamati ..	11 8	12 0	6 8	12 0	13 0	7 0	5 8* 12 0	5 8* 12 0	5 8* 12 0

(a) Not available. (n) Not reported. * Karkach.

N.B.—The prices of Karkach and Liverpool salt tally with each other in marts marked †.

DACCA, *the 22nd August 1931.*

J. C. ROY, for *Director of Agriculture, Bengal.*

Statement showing the daily gauge readings of certain rivers at the stations named below for the 7th August 1931.

Name of river and place where readings are taken.	Hour.	Reading on gauge.	Value of zero referred to P. W. D. datum.	Height above P. W. D. datum.	Compared with previous day's height.		Height above P. W. D. datum on same date in—	
					Rise.	Fall.	1930.	1929.
Ganges .. Monghyr ..	6 a.m. ..	118·80′	0·00′	118·80′	0·30′	..	121·50′	124·20′
Ganges .. Rajmahal ..	6 „ ..	80·20′	0·00′	80·20′	Steady		81·05′	83·00′
Ganges .. Goalundo ..	8-54 „ ..	29·30′	1·409′	30·709′	Steady		24·409′	26 009
Bhagirathi .. Swarupganj ...	8 a.m. ..	23·70′	0·00	23·70′	..	0·11′	24·38′	25·54′
Brahmaputra .. Dibrugarh ..	8 a.m. ..	35·40′	*302·70′	338·10′	1·50′	..	334·30′	334·56′
Brahmaputra .. Gauhati ..	....	26·60′	136·958′	163 558′	..	0·30′	155·658′	157·758′
Brahmaputra .. Serajganj ..	12-24 p.m. ..	42·20′	1·509′	43·709′	Steady		38·009′	39·009′
Dhaleswari .. Sabhar ..	7 a.m. ..	25·50′	0·00′	25·50′	Steady		19·00′	20·70′
Meghna .. Fenchuganj ..	7 a.m. ..	28·50′	1·509′	30·009′	..	0·05′	27·759′	28·459′
Meghna .. Bhairab Bazar ..	6-24 p.m. ..	20·80′	1·61′	22·41′	..	1·00′	19·11′	19·53′
Meghna .. Chandpur ..	12-59 „ ..	12·00′	1·61′	13·61′	0·08′	..	12·28′	12·61′
Lakhya .. Narayanganj ..	7 a.m. ..	25·71′	−5·59′	20·12′	0·04′	..	16·08′	16·95′
Madaripur Bil Route .. Takerhat ..	7-11 p.m. ..	14·50′	0·00′	14·50′	0·20′	..	11·70′	12·60′
Damodar .. Edilpur ..	6 a.m. ..	6·42′	92·58′	99·00′	1·42′	..	99·58′	101·91′

* Zero of gauge has been altered from 24th July 1931.

Statement showing the daily gauge readings of certain rivers at the stations named below for the 8th August 1931.

Name of river and place where readings are taken.	Hour.	Reading on gauge.	Value of zero referred to P. W. D. datum.	Height above P. W. D. datum.	Compared with previous day's height.		Height above P. W. D. datum on same date in—	
					Rise.	Fall.	1930.	1929.
Ganges .. Monghyr ..	6 a.m. ..	118·50′	0·00′	118·50′	..	0·30′	121·10′	124·60′
Ganges .. Rajmahal ..	6 „ ..	80·35′	0·00′	80·35′	0·15′	..	80·65′	83·15′
Ganges .. Goalundo ..	8-54 „ ..	27·80′	1·409′	29·209′	Steady		24·309′	26·109′
Bhagirathi .. Swarupganj ..	12 noon ..	23·64′	0· 0′	23·64′	..	0·06′	24·12′	25·90′
Brahmaputra .. Dibrugarh ..	8 a. m. ..	35·40′	*302·70′	338·10′	1·50′	..	334·30′	..
Brahmaputra .. Gauhati ..	....	26·50′	136·958′	163·458′	..	0·10′	155·858′	158·158′
Brahmaputra .. Serajganj ..	12-24 p.m. ..	42·20′	1·509′	43·709′	Steady		37·909′	39·309′
Dhaleswari .. Sabhar ..	7 a.m. ..	25·50′	0·00′	25·50′	Steady		19·20′	20·70′
Meghna .. Fenchuganj ..	7 a.m. ..	28·45′	1·509′	29·959′	..	0·05′	27·859	..
Meghna .. Bhairab Bazar ..	6-24 „ ..	20·67′	1·61′	22·28′	..	0·12′	19·28′	19·61′
Meghna .. Chandpur ..	1-44 p.m. ..	12·00′	1·61′	13·61′	Steady		12·28′	12·61′
Lakhya .. Narayanganj ..	7 a.m. ..	25·75	—5·59′	20·16′	0·04′	..	16·03′	..
Madaripur Bil Route .. Takerhat ..	7-11 p.m. ..	14·65′	0·00′	14·65′	0·15′	..	11·75′	12·70′
Damodar .. Edilpur ..	6 a.m. ..	8·92′	92·58′	101·50′	2·50′	..	98·70′	100·41′

*Zero of gauge has been altered from 24th July 1931.

Statement showing the daily gauge readings of certain rivers at the stations named below for the 9th August 1931.

Name of river and place where readings are taken.	Hour.	Reading on gauge.	Value of zero referred to P. W. D datum	Height above P. W. D. datum.	Compared with previous day's height.		Height above P. W. D. datum on same date in—	
					Rise.	Fall	1930	1929.
Ganges .. Monghyr ..	....	..	0·00′	..	..	..	120·80′	124·80′
Ganges .. Rajmahal ..	6 a.m. ..	80·65′	0·00′	80·65′	0·30′	..	80·25′	83·30′
Ganges .. Goalundo ..	8-54 „ ..	29·20′	1·409′	30·609′	..	0·10′	24·009′	26·309′
Bhagirathi .. Swarupganj ..	6 p.m. ..	23·75′	0·00′	23·75′	0·11′	..	24·10′	26·01′
Brahmaputra .. Dibrugarh ..	8 a.m. ..	34·00′	*301·50′	336·70′	..	1 67′	335·10′	333·81′
Brahmaputra .. Gauhati ..	....	26·30′	136·958′	163·258′	0·20′	..	156·258′	157·958′
Brahmaputra .. Serajganj ..	12-24 p.m.	42·20′	1·509′	43·709′	Steady		37·909′	39·509′
Dhaleswari .. Sabhar ..	7 a m. ..	25·60′	0·00′	25·60′	0·10′	..	19·40′	20·70
Meghna .. Fenchuganj ..	7 a.m. ..	28·40′	1·509′	29·909′	..	0·05′	27··09′	28·459′
Meghna .. Bhairab Bazar ..	6-24 „ ..	20·67′	1·61′	22·28′	Steady		19·28′	19·69′
Meghna .. Chandpur ..	2-24 p.m. ..	11·92′	1·61′	13·53′	..	0·17′	12·13′	12·61′
Lakhya .. Narayanganj ..	7 a.m. ..	25·71′	—5·59′	20·12′	..	0·04′	15·99′	17·08′
Madaripur Bil Route .. Takerhat ..	6-59 p m. ..	14·80′	0·00′	14·80′	0·15′	..	11·90′	12·70′
Damodar .. Edilpur ..	6 a.m. ..	7·42′	92·58′	100·00′	..	1·50′	102·50′	102·33′

* Zero of gauge has been altered from 24th July 1931.

Statement showing the daily gauge readings of certain rivers at the stations named below for the 10th August 1931.

Name of river and place where readings are taken.	Hour.	Reading on gauge.	Value of zero referred to P.W.D. datum.	Height above P. W. D. datum.	Compared with previous day's height.		Height above P. W. D. datum on same date in—	
					Rise.	Fall.	1930.	1929.
Ganges .. Monghyr ..	6 a.m. ..	120·80′	0·00′	120·80′	..	..	120·60′	124·60′
Ganges .. Rajmahal ..	6 „ ..	81·10′	0·00′	81·10′	0·45′	..	80·15′	83·40′
Ganges .. Goalundo ..	....	29·20′	1·409′	30·609′	Steady		23·909′	26·409
Bhagirathi .. Swarupganj ..	6 p.m. ..	24·34′	0·00′	24·34′	0·59′	..	24·11′	26·12′
Brahmaputra .. Dibrugarh ..	8 a.m.	33·75′	*302·70′	336·60′	..	0·10′	335·40′	333 76′
Brahmaputra .. Gauhati ..	....	26·70′	136·958′	163·658′	0·40′	..	156·358′	157·558′
Brahmaputra .. Serajganj ..	12-24 p.m. ..	42·00′	1·509′	43·509′	..	0·20′	37·909′	39·709′
Dhaleswari .. Sabhar ..	7 a.m. ..	25·50′	0·00′	25·50′	..	0·10′	19·50′	20·80′
Meghna .. Fenchuganj ..	7 a.m. ..	28·35′	1·509′	29·859′	..	0·05′	27·959′	28·509′
Meghna .. Bhairab Bazar ..	6-24 „ ..	20·58′	1·61′	22·19′	..	0·08′	19·36′	19·69′
Meghna .. Chandpur ..	3-9 p.m. ..	11 83′	1·61′	13 44′	..	0·09′	12·11′	12·61′
Lakhya .. Narayanganj ..	7 a.m. ..	25·67′	–5·59′	20·08′	..	0·04′	16·01′	16·99′
Madaripur Bil Route .. Takerhat ..	....	14·90′	0·00′	14·90′	0·10′	..	11·90′	12·80′
Damodar .. Edilpur ..	6 a.m. ..	7·33′	92·58′	99·91′	..	0·09′	106·25′	109·91′

* Zero of gauge has been altered from 24th July 1931.

Statement showing the daily gauge readings of certain rivers at the stations named below for the 11th August 1931.

Name of river and place where readings are taken.	Hour.	Reading on gauge.	Value of zero referred to P. W. D. datum.	Height above P. W. D. datum.	Compared with previous day's height.		Height above P. W. D. datum on same date in—	
					Rise.	Fall.	1930.	1929.
Ganges .. Monghyr ..	6 a.m. ..	121·60′	0·00′	121·60′	0·90′	..	122·10′	124·30′
Ganges .. Rajmahal ..	6 „ ..	81·60′	0·00′	81·60′	0·50′	..	80·70′	83·30′
Ganges .. Goalundo ..	8-54 „ ..	27·80′	1·409′	29·209′	..	1·40′	23·709′	26·409′
Bhagirathi .. Swarupganj ..	6 p.m. ..	25·08′	0·00′	25·08′	0·74′	..	24·74′	26·34′
Brahmaputra .. Dibrugarh ..	8 a.m. ..	33·80′	*302·70′	336·50′	..	0·10′	335·00′	339·96′
Brahmaputra .. Gauhati ..	....	26·90′	136·958′	163·858′	0·20′	..	155 958′	159·958′
Brahmaputra .. Serajganj ..	12-24 p.m. ..	41·80′	1·509′	43·309′	..	0·20′	37·909′	39·809′
Dhaleswari .. Sabhar ..	7 a.m. ..	25·50′	0·00′	25·50′	Steady		19·40′	20·80′
Meghna .. Fenchuganj ..	7 a.m. ..	28·30′	1·509′	29·809′	..	0·05′	28·009′	28·409′
Meghna .. Bhairab Bazar ..	6-24 „ ..	20·58′	1·61′	22·19′	Steady		19·36′	19·61′
Meghna .. Chandpur ..	3-54 p.m ..	12·08′	1·61′	13·69′	0·25′	..	12·03′	12·54′
Lakhya .. Narayanganj ..	7 a.m. ..	25·75′	— 5·59′	20·16′	0·08′	..	15·95′	16·91′
Madaripur Bil Route .. Takerhat ..	6-59 p.m. ..	15·00′	0·00′	15·00′	0·10′	..	11·90′	12·80′
Damodar .. Edilpur ..	6 a.m. ..	12·17′	92·58′	104·75	4·84′	..	107·58′	108·33′

* Zero of gauge has been altered from 24th July 1931.

Statement showing the daily gauge readings of certain rivers at the stations named below for the 12th August 1931.

Name of river and place where readings are taken.	Hour.	Reading on gauge.	Value of zero referred to P. W. D. datum.	Height above P.W.D. datum.	Compared with previous day's height.		Height above P. W. D. datum on same date in—	
					Rise.	Fall.	1930.	1929.
Ganges .. Monghyr	6 a.m.	122·40′	0·00′	122·40′	0·80′	..	124·20′	123·90′
Ganges .. Rajmahal	6 „	82·00′	0·00′	82·00′	0·40′	..	81·80′	83·20′
Ganges .. Goalundo	8-54 „	29·40′	1·409′	30·809′	0·10′	..	23·709′	26·409′
Bhagirathi .. Swarupganj	6 p.m.	26·24′	0·00′	26·24′	1·16′	..	24·99′	26·62′
Brahmaputra .. Dibrugarh	8 a.m.	33·70′	*302·70′	336·40′	..	0·10′	335·10′	334·36′
Brahmaputra .. Gauhati	....	26·50′	136·958′	163·458′	..	0·40′	156·458′	156·558′
Brahmaputra .. Sirajganj	12-24 p.m.	41·70′	1·509′	43·209′	..	0·10′	38·009′	39·809′
Dhaleswari .. Sabhar	7 a.m.	24·90′	0·00′	24·90′	..	0·60′	19·40′	20·80′
Meghna .. Fenchuganj	7 a.m.	28·20′	1·509′	29·709′	..	0·10′	28·009′	28·309′
Meghna .. Bhairab Bazar	6-24 a.m.	20·50′	1·61′	22·11′	..	0·08′	19·36′	19·53′
Meghna .. Chandpur	4-39 p.m.	12·08′	1·61′	13·69′	Steady		11·94′	12·36′
Lakhya .. Narayanganj	7 a.m.	25·79′	−5·59′	20·20′	0·04′	..	15·99′	16·74′
Madaripur Bil Route .. Takerhat	6-58 p.m.	15·10′	0·00′	15·10′	0·10′	..	11·85′	12·80′
Damodar .. Edilpur	6 a.m.	13·50′	92·58′	106·08′	1·33′	..	105·33′	109·00′

* Zero of gauge has been altered from 24th July 1931.

Statement showing the daily gauge readings of certain rivers at the stations named below for the 13th August 1931.

Name of river and place where readings are taken.	Hour.	Reading on gauge.	Value of zero referred to P. W. D. datum.	Height above P. W. D. datum.	Compared with previous day's height.		Height above P. W. D. datum on same date in—	
					Rise.	Fall.	1930.	1929.
Ganges .. Monghyr ..	6 a.m. ..	123·10′	0·00′	123·10′	0·90′	..	124·90′	123·60′
Ganges .. Rajmahal ..	6 „ ..	82·40′	0·00′	82·40′	0·40′	..	82·60′	82·90′
Ganges .. Goalundo ..	8-54 „ ..	27·80′	1·409′	29·209′	..	1·60′	23·709′	26·409′
Bhagirathi .. Swarupganj ..	6 p.m. ..	26·89′	0·00′	26·89′	0·65′	..	25·47′	26·88′
Brahmaputra .. Dibrugarh ..	8 a.m. ..	32·90′	*302·70′	335·60′	..	0·80′	335·40′	334·06′
Brahmaputra .. Gauhati ..	....	26·30′	136·958′	163·258′	..	0·20′	157·058′	156·358′
Brahmaputra .. Serajganj ..	12-24 p.m. ..	41·60′	1·509′	43·109′	..	0·10′	38·109′	39·709′
Dhaleswari .. Sabhar ..	7 a.m. ..	24·80′	0·00′	24·80′	..	0·10′	19·40′	20·90′
Meghna .. Fenchuganj ..	7 a.m. ..	28·15′	1·509′	29·659′	..	0·05′	28·109′	28·509′
Meghna .. Bhairab Bazar ..	6-24 „ ..	20·50′	1·61′	22·11′	Steady		19·53′	19·44′
Meghna .. Chandpur ..	5-34 „ ..	12·25′	1·61′	13·86′	0·17′	..	11·86′	12·28′
Lakhya .. Narayanganj ..	7 a.m. ..	25·83′	−5·59′	20·24′	0·04′	..	16·08′	16·62′
Madaripur Bil Route .. Takerhat ..	....	15·15′	0·00′	15·15′	0·05′	..	11·90′	12·70′
Damodar .. Edilpur ..	6 a.m. ..	13·50′	92·58′	106·08′	..	0·17′	103·41′	104·16′

*Zero of gauge has been altered from 24th July 1931.

CALCUTTA IMPROVEMENT TRUST.

Calcutta, the 13th August 1931.

Notice under Section 43 of Bengal Act V of 1911.

Scheme No. XXXIX (Humayun Place Widening and Extension and Bertram Street Widening).

The Board of Trustees for the Improvement of Calcutta hereby give notice that a street scheme, viz., Scheme No. XXXIX (Humayun Place Widening and Extension and Bertram Street Widening) has been framed for the area bounded as follows:—

North.—From a point on the north-western boundary of 15 and 15/1, Chowringhee Road running eastward along the southern edge of Chowringhee Place and across Bertram Street to a point on the south-western corner of Municipal office.

East.—From this point running southwards along the eastern edge of Bertram Street to a point on the south-western corner of Municipal Market.

South.—From this point crossing Bertram Street to the south-eastern corner of 19, Lindsay Street; thence westwards along the northern edge of Lindsay Street to a point on the south-western corner of 20, Chowringhee Road.

West.—From this point northwards along the eastern edge of Chowringhee Road to the starting point.

Particulars of the scheme, a map of the area comprised in the scheme and a statement of land which it is proposed to acquire may be inspected at the offices of the Trust at 5, Clive Street, on week days between 11 a.m. and 4 p.m. and on Saturdays between 11 a.m. and 2 p.m.

Copies of the above documents will be delivered to the applicants on payment of the following fees:—

	Rs.	As.
Particulars of the scheme ...	0	4
Map of the scheme ...	1	0
Statement of land which it is proposed to acquire ...	0	4

Objections to the scheme will be received up to the 31st October 1931.

J. A. L. SWAN, *Chairman.*

GOVERNMENT OF BENGAL.

Marine Department.

NOTIFICATION.

No. 33Mne.—12th August 1931.—The following annual report on the working of the Survey Departments, Bengal, under the Inland Steam Vessels Act, I of 1917, during the year 1930-31, is published for general information.

E. N. BLANDY,
Secy. to the Govt. of Bengal.

Annual report on the working of the Survey Departments, Bengal, under the Inland Steam Vessels Act, I of 1917, for the year 1930-31.

Calcutta.

Engineer Commander S. J. Fenner, R.I.M., Principal Engineer and Ship Surveyor, Calcutta, presided over the department throughout the year. Engineer Lieutenant Commander C. R. L. Bergner, R.I.M., Engineer Lieutenant Commander J. Beggs, R.I.M., and Engineer Lieutenant Commander H. J. Creswell, R.I.M., carried out the duties of the 2nd, 3rd and 4th Engineer and Ship Surveyor, respectively, during the year under report.

Engineer Lieutenant H. J. Mills, R.I.M., was appointed as the 5th Engineer and Ship Surveyor, Calcutta, with effect from the 15th April 1930. He was relieved by Engineer Lieutenant A. B. Collins, R.I.M., from the 17th April 1930.

Mr. H. J. Hagger carried out the duties of the senior Ship Surveyor up to the 27th March 1931.

Chittagong.

Engineer Lieutenant Commander J. E. Moloney, R.I.M., Engineer and Ship Surveyor, Chittagong, presided over the department throughout the year.

Statement of surveys carried out under the Inland Steam Vessels Act, I of 1917, during the year 1930-31.

Description of vessels and nature of surveys.		Number of vessels surveyed.		Number of visits made by the surveyor.	Number of certificates granted.	Number of visits made on Sundays and holidays and after office hours.	Survey fees realised.
		Steam vessels.	Motor vessels.				Rs. A. P.
1. Inland steam and motor vessels for passenger certificates.	Calcutta ..	153	27	610	157	5	20,921 10 0
	Chittagong ..	114	52	266	128	..	13,613 12 0
2. Inland steam and motor vessels for extension of passenger certificates.	Calcutta ..	2	..	2	..	..	63 12 0
	Chittagong ..	..	..	..	..	..	....
3. Inland steam and motor vessels for inspection of boilers.	Calcutta ..	1	..	1	..	..	35 0 0
	Chittagong ..	..	..	..	..	..	....
4. Inland steam and motor vessels for non-passenger certificates.	Calcutta ..	151	42	730	165	..	15,945 0 0
	Chittagong ..	37	22	194	24	..	7,405 0 0
5. Inland steam and motor vessels for certificates of fitness for the carriage of dangerous petroleum.	Calcutta ..	..	10	15	10	..	280 0 0
	Chittagong ..	..	..	..	..	..	....
6. Inland steam and motor vessels for certificates of fitness for the carriage of non-dangerous petroleum.	Calcutta ..	6	1	10	7	..	....
	Chittagong ..	..	..	..	..	..	..
Total ..	Calcutta ..	313	80	1,368	330	5	37,245 6 0
	Chittagong ..	151	74	460	152	Nil	21,018 12 0

Examination of Engineers and Engine-drivers under Act I of 1917 held during the year 1930-31.

Class of certificate.		Number of candidates examined.	Results.		Examination fees realised.	Remarks.
			Passed.	Failed.		
					Rs.	
1. Engineers		Nil	Nil	Nil	Nil	
2. First Class Engine-driver of inland steam vessels.	Calcutta ..	99	20	79	990	....
	Chittagong ..	13	1	12	130	One candidate paid his fee in 1929-30. Another candidate paid fee in 1930-31 but was not examined.
3 First Class Engine-driver of inland motor vessels.	Calcutta ..	..	..	..	..	....
	Chittagong ..	2	..	2	20	....
4. Second Class Engine-driver of inland steam vessels.	Calcutta ..	222	56	166	888	....
	Chittagong .	33	5	28	148	Four candidates paid fees but were not examined.
5. Second Class Engine-driver of inland motor vessels.	Calcutta ..	63	24	39	252	....
	Chittagong ..	34	15	19	160	Six candidates paid fees but were not examined.
6. Permit to take charge of inland motor vessels of 40 B. H. P. or less.	Calcutta ..	3	3	..	12	....
	Chittagong ..	4	3	1	20	One candidate paid fee but was not examined.
Total ..	Calcutta ..	387	103	284	2,142	
	Chittagong ..	86	24	62	478	

Printed at the Bengal Government Press, Alipore, and published by the Bengal Secretariat Book Depot, Writers' Buildings, in the City of Calcutta, on the 27th August 1931.

Registered No. C207

The Calcutta Gazette

Extraordinary

TUESDAY, SEPTEMBER 1, 1931.

GOVERNMENT OF BENGAL.

Finance Department.

Budget.

NOTIFICATION.

No. 3860-F.—1st September 1931.—The following notification, issued by the Government of India in the Finance Department, is published for general information.

E. N. BLANDY,

Secretary to the Government of Bengal.

GOVERNMENT OF INDIA.

Finance Department.

NOTIFICATION.

Simla, the 1st September 1931.

No. F-3(14)—F/31.—It is notified for general information that Government of India Treasury Bonds, 1935, repayable at par on the 15th September 1935, and bearing interest at 6½ per cent. per annum payable half-yearly, which interest will be liable to income-tax, will be obtainable with effect from the 15th September 1931, until further notice.

The Bonds will be available—

(*a*) at the Local Head Offices and Indian branches of the Imperial Bank of India, and at all Government treasuries, in denominations of Rs. 100, Rs. 200, Rs. 500, Rs. 1,000, Rs. 5,000, Rs. 10,000, Rs. 25,000. Rs. 50,000, and Rs. 1,00,000, and

(*b*) at all post-offices conducting savings bank business in denominations of Rs. 100, Rs. 200, Rs. 500, and Rs. 1,000, and subject to a maximum of Rs. 20,000 per applicant.

The first interest payment due on the Bonds for the full half-year from the 15th September 1931 to the 14th March 1932 will be made on the 15th March 1932, and thereafter interest will be payable half-yearly on the 15th September and the 15th March.

2. The prices at which the Bonds can be purchased are as follows:—

Bonds purchased on any date from the—	Price of Treasury Bonds per Rs. 100 nominal.
	Rs. A. P.
15th September 1931 to the 19th September 1931 ...	100 0 0
21st September 1931 to the 26th September 1931 ...	100 2 0
28th September 1931 to the 3rd October, 1931 ...	100 4 0
5th October 1931 to the 10th October 1931 ...	100 6 0

and thereafter at prices increasing by 2 annas per cent. weekly until further notice. This

weekly increase represents the amount of interest which accrues weekly on the Bonds.

3. Applications for Treasury Bonds may be for Rs. 100 or any multiple of that sum.

4. Applications may be in any form which states clearly the amount and description of the securities required, the full name and address of the applicant, and the treasury or sub-treasury at which he desires that interest shall be paid. Payment for the Bonds should be made at the time of application.

5. (*a*) Payment may be made in cash or by cheque. Cheques tendered at a Local Head Office or Branch of the Imperial Bank of India should be drawn in favour of the Secretary and Treasurer or the Agent of the branch, as the case may be. In the case of purchases made at a treasury or a post-office, the cheques should be drawn in favour of the officer to whom the application is presented.

(*b*) Six per cent. Bonds, 1931, will be received in payment or part payment of the purchase price of Treasury Bonds at the Local Head Offices and Indian branches of the Imperial Bank of India, and at all Government treasuries at their full maturity value, that is to say, at Rs. 100 for Rs. 100 nominal of the bonds tendered.

Applicants who tender bonds in payment must transfer such bonds to Government, (*a*) in the case of Promissory Notes, by endorsing them with the words "Pay to the Governor-General in Council" over their signature, and (*b*) in the case of Stock, by signing the form of transfer deed on the back of the Stock Certificate before a witness.

(*c*) Treasury Bills will be accepted on or after the day on which they fall due in lieu of cash at their face value in payment or part payment of the purchase price at the places where such treasury bills were issued.

6. The Bonds will be issued in the form of—

(*i*) Stock, the applicants for which will be given Stock Certificates, or

(*ii*) Promissory Notes.

If no preference is stated by the applicant, the securities will be issued in the form of promissory notes.

7. Brokerage will be paid at the rate of 1/16 per cent. to recognised brokers and bankers on applications for Bonds bearing their stamp.

By order of the Governor-General in Council,

H. DENNING,

Secretary to the Government of India.

FORM OF APPLICATION

I / We .....

herewith tender

(*a*) 6 per cent. Bonds, 1931, of the nominal value of Rs. .....

(*b*) Cash Rs.....
Cheque for Rs.....

and request that 6½ per cent. Treasury Bonds, 1935, of the nominal value of Rs..... may be issued to me / us in the form of Promissory Note(s)* / Stock Certificate, interest to be payable at.....

Signature.....

Full name .....

Address.....

.....

.....

Date.....

NOTE.- The bonds tendered in payment should be endorsed with the words "Pay to the Governor-General in Council" over the signature of the applicant if they are in the form of Promissory Notes, and the transfer deed on the back should be signed by him before a witness if they are in the form of Stock Certificates.

*State here particular denominations required.

Form of application for the purchase of 6½ per cent. Treasury Bonds, 1935, at a Post Office.

I / We tender Rs. _____ Safe custody receipt for 1931 Bonds deposited with the Accountant-General, in cash / by cheque Posts and Tels., in payment of 6½ per cent. Treasury Bonds, 1935, of the value of Rs. to be issued in the form of Promissory Notes / Stock Certificates and to be retained in the custody of the Accountant-General, Posts and Telegraphs / delivered to me / us.

2. Interest to be payable

(*a*) at the treasury.

(*b*) into my Savings Bank Account No. opened at the Post Office.

(*c*) into a Savings Bank Account to be opened in my name at the Post Office.

Signature.....

Name in full.....

Address.....

Dated.....,

The *1931.*

(To be filled in by the Post Office.)

Date of presentation at the Post Office.

Date Stamp

(To be noted by the receiving Postmaster.)

N.B.—For the purchase price of Treasury Bonds for each Rs. 100 nominal, please see the reverse of this form.

Purchase price of 6½ per cent. Treasury Bonds, 1935, for each Rs. 100 nominal.

Week of purchase.	Price. Rs. A. P.
15th September 1931 to 19th September 1931 ...	100 0 0
21st September 1931 to 26th September 1931 ...	100 2 0
28th September 1931 to 3rd October 1931 ...	100 4 0
5th October 1931 to 10th October 1931	100 6 0
12th October 1931 to 17th October 1931 ...	100 8 0
19th October 1931 to 24th October 1931 ...	100 10 0
26th October 1931 to 31st October 1931 ...	100 12 0
2nd November 1931 to 7th November 1931 ...	100 14 0
9th November 1931 to 14th November 1931 ...	101 0 0
16th November 1931 to 21st November 1931 ...	101 2 0
23rd November 1931 to 28th November 1931 ...	101 4 0
30th November 1931 to 5th December 1931 ...	101 6 0
7th December 1931 to 12th December 1931 ...	101 8 0
14th December 1931 to 19th December 1931 ...	101 10 0
21st December 1931 to 26th December 1931 ...	101 12 0

Printed at the Bengal Government Press, Alipore, and published by the Bengal Secretariat Book Depot, Writers' Buildings, in the City of Calcutta, on the 1st September 1931.

Registered No. C207 No. 36 of 1931

The Calcutta Gazette

THURSDAY, SEPTEMBER 3, 1931.

CONTENTS:

	PAGE.
PART I.—Orders and Notifications by the Governor of Bengal, the Government of Bengal, the High Court, Government Treasury, etc.	1037—1074
PART IA.—Orders and Notifications by the Government of India republished for general information	233—234
PART IB.—Educational Notices ..	885—892
PART II.—Advertisements	793—834
PART III.—Acts of the Bengal Legislative Council	*Nil*
PART IV.—Bills introduced in the Bengal Legislative Council, Reports of Select Committees presented or to be presented to that Council, and Bills published before introduction in that Council ..	*Nil*
PART V.—Acts of the Indian Legislature assented to by the Governor General and Ordinances promulgated under section 72 of the Government of India Act ..	*Nil*
PART VI.—Bills introduced in the Council of State and Legislative Assembly, Reports of Select Committees presented to the Council and Assembly and Bills published under Rule 18 of the Indian Legislative Rules	*Nil*
SUPPLEMENT No. 36—	
Calcutta Improvement Trust Notice—Return of Vital Statistics—Cotton Ginning and Pressing—Weekly Weather and Crop Report—Daily gauge-readings—Weekly gauge-readings—Weekly Vital Statistics ..	1117—1139
Resolution on the Report on the Administration of the Jail Department of the Presidency of Bengal, for the year 1930	1140—1142

Part I

Orders and Notifications by the Governor of Bengal, the Government of Bengal, the High Court, Government Treasury, etc.

ORDERS BY THE GOVERNMENT OF BENGAL.

No. 7865A.

Appointments and Transfers.

GENERAL.

Tippera-Pabna.—No. 7668A.—24th August 1931. — Maulvi Emdad Ali, Deputy Magistrate and Deputy Collector, on leave, who has, under the orders of the 3rd August 1931, been posted to Chandpur, Tippera, is posted temporarily to the Sirajganj subdivision of the Pabna district.

Nadia-Rajshahi-Malda.—No. 7693A.—24th August 1931.—Maulvi Hasibuddin Ahmad, Subordinate Judge and Assistant Sessions Judge, Nadia, is appointed temporarily to act as Additional District and Sessions Judge, Rajshahi and Malda.

Burdwan. — No. 7737A. — 26th August 1931.—Babu Akshay Kumar Chakrabatti, Vidyabhusan, Subordinate Judge and Assistant Sessions Judge, Asansol, Burdwan, is appointed temporarily to act as Additional District and Sessions Judge of that district.

Khulna-Bankura. — No. 7757A. — 26th August 1931.—Babu Bimal Chandra Sinha, Deputy Magistrate and Deputy Collector, Khulna, is transferred to the headquarters station of the Bankura district.

Bankura-Jessore. — No. 7760A. — 26th August 1931.—Babu Nabagauranga Basak, Deputy Magistrate and Deputy Collector, Bankura, is transferred to the headquarters station of the Jessore district.

Hooghly-Rajshahi.—No. 7834A. — 29th August 1931.—Babu Jiban Chandra Chatarji, Deputy Magistrate and Deputy Collector, Hooghly, is transferred to the headquarters station of the Rajshahi district.

24-Parganas-Hooghly.—No 7848A. — 31st August 1931. — Mr. Nrisinha Ranjan Mukharji, Deputy Magistrate and Deputy Collector, Diamond Harbour, 24-Parganas, is appointed temporarily to act as Magistrate and Collector, Hooghly.

Birbhum-Hooghly. — No. 7851A. — 31st August 1931.—The orders contained in notification No. 7622A., dated the 26th August 1931, appointing Babu Srimanta Kumar Das Gupta, M.B.E., Deputy Magistrate and Deputy Collector, Birbhum, to act as Magistrate and Collector, Hooghly, are cancelled.

24-Parganas.—No. 7853A. — 31st August 1931.—Babu Sharat Kumar Guha, Deputy Magistrate and Deputy Collector, Diamond Harbour, 24-Parganas, is appointed temporarily to have charge of that subdivision.

POLICE.

Calcutta.—No. 7726A.—25th August 1931. —Rai Sahib Kali Saday Ghoshal, an Inspector of the Calcutta Police, is appointed to act as an Assistant Commissioner of Police, Calcutta, during the absence, on leave, of Rai Bon Bihari Mukharji Bahadur, or until further orders.

Murshidabad-Malda.—No. 7831A. — 29th August 1931.—Mr. Hira Lal Shaha, Assistant Superintendent of Police, Murshidabad, is appointed temporarily to act as Superintendent of Police, Malda.

Resignation.

GENERAL.

No. 7828A.—29th August 1931.—Mr. S. W. Goode, C.I.E., has been permitted to resign His Majesty's Indian Civil Service, with effect from the 4th November 1931.

Leave.

GENERAL.

No. 7630A.—22nd August 1931.—Babu Birendra Lal Gupta, Sub-Deputy Collector, is allowed leave on average pay for one month, under rule 81 (*b*) (*ii*) of the Fundamental Rules, in extension of the leave granted to him under the orders of the 1st May 1931.

No. 7686A.—24th August 1931.—In modification of the orders of the 12th December 1930, Maulvi Abdul Bari, Deputy Magistrate and Deputy Collector, is allowed combined leave for six months and eighteen days, with effect from the 3rd January 1931, viz., privilege leave for four months, under article 260 of the Civil Service Regulations, and in continuation furlough out of India on average salary for one month and five days with furlough on half average salary for one month and thirteen days, under articles 325 and 325A of those Regulations.

No. 7689A.—24th August 1931. — Babu Surendra Nath Sen Gupta (No. I), Sub-Deputy Collector, is allowed leave on average pay, under rule 81 (*b*) (*ii*) of the Fundamental Rules, up to the 23rd December 1931, with effect from the 1st October 1931, or any subsequent date on which he may be relieved of his duties in the Settlement Department.

Jalpaiguri. — No. 7702A. — 25th August 1931.—Babu Bhupendra Kumar Adhikari, Deputy Magistrate and Deputy Collector, on probation, Jalpaiguri, is allowed leave on average pay for twenty days, under rule 81 (*b*) (*ii*) of the Fundamental Rules, with effect from the date on which he may avail himself of it.

No. 7711A.—25th August 1931.—Maulvi Manzur Ahmad Chaudhuri, Deputy Magistrate and Deputy Collector, is allowed leave on average pay up to the 14th October 1931, under rule 81 (*b*) (*ii*) of the Fundamental Rules, in extension of the leave granted to him under the orders of the 27th July 1931.

No. 7748A.—26th August 1931.—Babu Upendra Nath Biswas, Sub-Deputy Collector, is allowed leave on average pay up to the 14th October 1931, under rule 81 (*b*) (*ii*) of the Fundamental Rules, in extension of the leave granted to him under the orders of the 6th June 1931.

Rajshahi.—No. 7768A.—26th August 1931. —Babu Lalit Kumar Sen, Deputy Magistrate and Deputy Collector, Rajshahi, is allowed leave on average pay, under rule 81 (*b*) (*ii*) of the Fundamental Rules, up to the 23rd December 1931, with effect from the 1st September 1931, or any subsequent date on which he may be relieved.

Bakarganj. — No. 7776A.—27th August 1931.—Babu Jnanendra Mohan Chaudhuri, Deputy Magistrate and Deputy Collector, Bakarganj, is allowed leave on average pay, under rule 81 (*b*) (*ii*) of the Fundamental Rules, from the 28th September to the 14th October 1931, inclusive.

No. 7797A.—29th August 1931.—Babu Anil Chandra Basu, Deputy Magistrate and Deputy Collector, is allowed leave on average pay for two days, under rule 81 (*b*) (*ii*) of the Fundamental Rules, in extension of the leave granted to him under the orders of the 14th August 1931.

POLICE.

No. 7647A.—22nd August 1931.—Mr. E Hodson of the Indian Police Service has been granted by the High Commissioner for India an extension of special disability leave on half average pay, on medical certificate, for one month and ten days.

Calcutta.—No. 7724A.—25th August 1931. —Rai Bon Bihari Mukharji Bahadur, an Assistant Commissioner of Police, Calcutta, is allowed leave on average pay for one month, under rule 81 (*b*) (*ii*) of the Fundamental Rules, with effect from the 16th August 1931.

R. N. REID,

Chief Secy. to the Govt. of Bengal (offg.).

POLITICAL DEPARTMENT.

Political.

NOTIFICATIONS.

No. 14521P.—26th August 1931.—In exercise of the power conferred by section 63 of the Cantonments Act, 1924 (II of 1924), the Governor in Council is pleased to cancel, with effect from the 1st April 1931, notification No. 13646P., dated the 21st November 1929, relating to the lighting tax in the Lebong Cantonment.

No. 14583P.—28th August 1931.—In exercise of the power conferred by section 99A of the Code of Criminal Procedure, 1898 (Act V of 1898), the Governor in Council hereby declares to be forfeited to His Majesty all copies, wherever found, of the Bengali book entitled "Mandirer Chavi" by Kali Kinkar Sen Gupta, M.A., B.SC., M.B., printed by Shanta Kumar Chattopadhyaya at Bani Press, 33A, Madan Mitra Lane, Calcutta, and published by Kinkar Madhab Sen Gupta from 124/4, Maniktala Street, Calcutta, on the ground that the said book contains matter which brings or attempts to bring into hatred or contempt and excites or attempts to excite disaffection towards the Government established by law in British India, the publication of which is punishable under section 124A of the Indian Penal Code.

R. N. REID,
Chief Secy. to the Govt. of Bengal (offg.).

Jails.

Orders by the Commissioner of Police, Calcutta.

Calcutta, the 30th August 1931.

In exercise of the power conferred on me by rule 63 (2) of the Bengal Jail Code, I reappoint Mr. A. Raheem, C.I.E., M.L.C., to be a non-official visitor of the Presidency Jail, Calcutta.

L. H. COLSON,
Commissioner of Police, Calcutta (offg.).

POLICE DEPARTMENT.

NOTIFICATIONS.

Pabna.—No. 3579Pl.—21st August 1931.—In exercise of the power conferred by section 4 (*l*) (*s*) of the Code of Criminal Procedure, 1898 (Act V of 1898), and in modification of all previous notifications published in the *Calcutta Gazette* relating to the area included in the Shazadpur police-station in the district of Pabna and to the boundaries of that area, the Governor in Council is pleased to declare that the villages specified in the following schedule, which have hitherto been included in that police-station, shall be included in the police-station Chauhali in the same district:—

Schedule.

Names of villages.	General jurisdiction list number of thana Shazadpur.
Uparpur	... 140
Sailjana	... 141
Agbianpur	... 142
Singuli	... 183
Choubaria	... 184
Amuria	... 185
Arazi Biljalahar	... 186
Arkandi	... 187
Dhubalia	... 188
Atia Dhubalia	... 189
Chandair	... 190
Atia Salangi	... 191
Kathalia	... 192
Dhupghati	... 193
Isupsahi Salangi	... 194
Bunapara Salangi	... 195
Bausa	... 196
Minadiha	... 197
Char Pachuria	... 198
Biljalahar	... 199
Sura	... 200
Goprekhi	... 201
Gaynakandi	... 202
Ag-Simulia	... 203
Dutta Kandi	... 204
Madhya Simulia	... 205
Pachh-Simulia	... 206
Hatail	... 207
Chaubaria	... 208
Bagutia	... 209
Hijalia	... 210
Ghusuria	... 211
Payla	... 212
Sambhudia	... 213
Thak Madhya Simulia	... 214
Pachh Simulia	... 215
Pakutia	... 216
Bakulia	... 217
Bri Dasuria	... 218
Khas Deldarpur	... 223
Khas Deldarpur, Part II	... 224
Sambhudia	... 226
Arma Suka	... 227
Bahulakol	... 228
Deldarpur	... 229
Ewazi Dhupalia	... 230
Ewazi Pakutia	... 231
Ewazi Sura	... 232
Ewazi Gaynakandi	... 233
Ewazi Kathalia	... 234
Ewazi Armasuka	... 235
Ewazi Singuli	... 236
Arma Suka	... 237
Sakpal	... 238
Birmasuka	... 239
Bir Baunia	... 240
Mitain	... 241
Khas Pukhuria	... 242
Char Kodalia	... 243
Char Kurki	... 244
Banya	... 245
Rehai Pukhuria	... 246
Char Nakalia	... 247
Binanai	... 248

Pabna.—No. 3580Pl.—21st August 1931.—In exercise of the power conferred by section 4 (*l*) (*s*) of the Code of Criminal Procedure, 1898 (Act V of 1898), and in modification of all previous notifications published in the *Calcutta Gazette*, the Governor in Council is pleased to declare that the villages specified in the following schedule, which are not at

present included in any police-station, shall be included in the police-station Chauhali in the district of Pabna:—

Schedule.

Names of villages.	Names of adjacent villages.
Salimabad	.. Chaubaria (J. L. No. 208 of police-station Shazadpur).
Pathrail	.. Hatail (J. L. No. 207 of police-station Shazadpur).
Hapania	.. Hatail (J. L. No. 207 of police-station Shazadpur).

Tippera.—No. 3672Pl.—22nd August 1931.—In exercise of the power conferred by section 4 (*l*) (*s*) of the Code of Criminal Procedure, 1898 (Act V of 1898), and in modification of all previous notifications published in the *Calcutta Gazette*, the Governor in Council is pleased to declare that the villages specified in the following schedule, which are not at present included in any police-station, shall be included in the police-station Chandpur in the district of Tippera:—

Schedule.

Names of villages.	General J. L. No. of thana Chandpur allotted under this notification.
Thak Char Laggimara	... 367
Char Jalalpur	... 368
Baher Char	... 369
Mear Char	... 370

Tippera.—No. 3732Pl.—24th August 1931.—In exercise of the power conferred by section 4 (*l*) (*s*) of the Code of Criminal Procedure, 1898 (Act V of 1898), and in modification of all previous notifications published in the "*Calcutta Gazette*" relating to the area included in the Nabinagar police-station in the district of Tippera and to the boundaries of that area, the Governor in Council is pleased to declare that the villages specified in the following schedule, which have hitherto been included in that police-station, shall be included in the Brahmanbaria police-station in the same district:—

Schedule.

Names of villages.	General J. L. No. of thana Nabinagar.
Char Lalpur	... 167
Char Lalpur	... 168
Lalpur Hosenpur	... 169
Sarippur	... 170
Bayek	... 171
Lausar	... 172
Bhabanipur	... 173
Araisidha	... 174
Char Chartala Bazar	... 175
Char Chartala	... 176
Jatrapur	... 177
Sonarampur	... 178
Baikunthapur	... 179
Baratala	... 180
Jagadispur	... 181
Naoghat	... 182
Tarua	... 184
Dagarisar	... 185

No. 3811Pl.—27th August 1931.—In pursuance of the provisions of rule 67 of the Calcutta and Howrah Motor Vehicles Rules, 1930, the Governor in Council is pleased to declare the following streets to be streets in which the plying for hire by omnibuses shall be generally restricted, in view of the density of traffic thereon and the existence of alternative facilities for the conveyance of passengers, namely:—

Alipore Lane.
Ashutosh Mukherji Road.
Bowbazar Street.
Chowringhee Road.
College Street.
Cornwallis Street.
Dalhousie Square, North, South, East and West.
Dhurrumtollah Street.
Diamond Harbour Road (from New Diamond Harbour Road to Alipore Lane).
Dufferin Road.
Elliott Road.
Esplanade, East.
Government Place, East.
Harrison Road.
Hazra Road (west of Russa Road).
Howrah Bridge.
Judges' Court Road.
Kalighat Bridge.
Kidderpore Road.
Lall Bazar Street.
Chitpore Road.
Circular Road (from Shambazar to Park Street Junction).
Mohan Lall Street.
Ochterlony Road.
Old Court House Street.
Royd Street.
Russa Road (up to junction of Prince Anwar Shah Road).
Strand Road.
Wellington Street.

No. 3820Pl.—27th August 1931.—In exercise of the powers conferred by section 8 of the Identification of Prisoners Act, 1920 (XXXIII of 1920), the Governor in Council is pleased to make the following rules to regulate the taking of measurements and photographs of convicts and other persons, namely:—

Rules.

1. **Taking of photographs.**—No Magistrate shall order a photograph of a convict or other person to be taken by the police for the purposes of the Identification of Prisoners Act, 1920, unless he is satisfied that such photograph is required for circulation to different places, or for showing it, for the purpose of identification, to a witness who cannot easily be brought for a test identification to the place where the investigation is proceeding, or that the photograph is required to be preserved as a permanent record.

2. **Place for taking measurements and photographs.**—Measurements and photographs shall invariably be taken in or alongside the court police office, or inside a police-station or a jail, and in no case shall they be taken in view of the public.

3. **Manner in which photographs are to be taken.**—Photographs shall be taken of the head and shoulders only with full face and profile, in quarter-plate size.

4. **Finger prints.**—Measurements of finger prints shall be taken in the following manner, namely:—

(1) The "rolled" prints of the right hand shall be taken first, each finger being inked and impressed before the next finger in rotation is linked. When the "rolled" prints of the right hand have been taken, the operator shall take the "plain" prints of the four fingers of that hand simultaneously. When the right hand has been finished, the operator shall proceed to take the prints, "rolled" and "plain," of the left hand in a similar manner. The "rolled" prints shall show the complete contour of the bulbs of the fingers. The impressions of the upper phalanx of fingers only shall appear.

(2) If any finger is missing, or is so deformed that it is impossible to obtain an impression, the fact shall be noted in ink in the space allotted for that finger by the word "missing" or "deformed." In the case of double fingers, the prints of both fingers shall, if possible, be taken; and if this is not possible, then the print of the more prominent of the two fingers shall be taken.

(3) Impressions shall be taken with printers' ink.

(4) A "rolled" print shall be obtained by first inking the bulb-surface of the finger between the boundaries of the nail and then lightly rolling the inked finger over on to the paper once, the plane of the nail being at right angles to the plane of the paper.

(5) A "plain" print shall be obtained by lightly placing the inked finger flat upon the paper without any turning movement.

5. **Foot-prints.**—Measurements of foot-prints shall be taken in the following manner, namely:—

A tin slab shall be inked with printers' ink by means of a roller. The person to be measured shall be barefooted and shall place each foot in turn first on to the inked slab and then upon a piece of paper kept at a suitable distance.

6. **Height.**—A measurement of height shall be obtained by making the person to be measured stand erect, barefooted, on a measuring standard and recording his actual height.

7. **Dress.**—The dress to be worn by a person, when being photographed, shall be his ordinary every day attire, or in the case of persons impersonating others, the usual attire of the person or class of person impersonated.

8. **Records.**—The records of measurements and photographs shall be preserved as follows:—

(1) during investigation, by the investigating police;

(2) during trial, by the court police;

(3) the rules regarding the safe custody of case diaries shall apply *mutatis mutandis* in both cases (1) and (2); and

(4) after the termination of the investigation or trial, by the Criminal Investigation Department Bureau: the head of the Criminal Investigation Department to be responsible for the safe custody and disposal of the records.

II. Notification No. 199Pl., dated the 21st January 1925, is hereby cancelled.

No. 3821Pl.—27th August 1931.—In exercise of the powers conferred by sections 6 and 13 of the Sarais Act, 1867 (XXII of 1867), the Governor in Council is pleased to make the following regulations for the Presidency of Bengal other than the town of Calcutta:—

Regulations.

1. These regulations shall be called the Bengal Sarais Regulations, 1931.

2. The register kept by the Magistrate of the District under section 4 of the Sarais Act, 1867, shall be maintained in the form set forth below:—

Register of Sarais in district—

1	2	3	4
Name of sarai.	Situation of sarai.	Name of keeper.	Address and residence of the keeper.

3. No person shall be registered as the keeper of a sarai unless he produces a certificate of character signed by a gazetted officer in the following form:—

.....son of .....
caste .....residence .....
police-station ....district .....
is of good character and fit to be registered as the keeper of a sarai.

Dated the..... Name .....

Designation.....

4. The Magistrate of the District shall cause every officer in charge of a subdivision, a police-station and a police-outpost to be furnished with copies of the register relating to sarais which may be located within their jurisdiction and shall communicate to them all alterations in the register as they occur.

5. Whenever a police officer discovers that a sarai which ought to have been registered in accordance with the provisions of the Sarais Act, 1867, has not been so registered, or that there have been changes in the keepers of any sarai, he shall report the fact immediately to the Magistrate of the District to enable the register to be corrected.

6. (*i*) The keeper of every registered sarai shall be furnished by the Magistrate of the District with copies of the following form of schedule in which particulars of all persons visiting his sarai shall be entered by the keeper if he is literate, or by a police officer to be deputed daily for the purpose, if he is illiterate. When completed the schedules shall be made over to such person as the officer in charge of the local police-station or police-outpost may direct.

(*ii*) The keeper of every registered sarai shall also keep a register in the same form, in column 8 of which persons resorting to the sarai shall immediately on their arrival be required to enter their names, if they are literate, or their left thumb impressions, if they are illiterate.

Form of schedule required under section 8 of Act XXII of 1867 giving information of persons resorting to the sarai at..... which has been registered in the name of.....

1	2	3	4	5	6	7	8	9	10	11
Serial No.	Name of person resorting to the sarai.	Name of father.	Address.	Profession.	Date and hour of arrival.	Name of the place from which he has come.	Signature or thumb impressions of person resorting to the sarai.	Date and hour of departure.	Where he is going.	Remarks.

7. The Magistrate of the District, or any Magistrate, may require any police-officer not below the rank of a sub-inspector to inspect any registered sarai.

8. Except regulation 6, none of these regulations shall apply to any sarai which is under the direct management of Government or the Commissioners of a Municipality.

NOTE.—The registers and the schedule prescribed above should be preserved for two years.

No. 3846Pl.—31st August 1931.—The following draft of an amendment, which in exercise of the power conferred by section 11 of the Indian Motor Vehicles Act, 1914 (VIII of 1914), the Governor in Council proposes to make in the Calcutta and Howrah Motor Vehicles Rules, 1930, published under notification No. 1398Pl., dated the 19th March 1930, at pages 415-473, Part I of the *Calcutta Gazette* of the 27th March 1930, is hereby published for the information of persons likely to be affected thereby.

2. The draft will be taken into consideration on or after the 3rd October 1931, and any objection or suggestion received with regard thereto by the undersigned before that date will be duly considered:—

Draft amendment.

In sub-heading "(*h*) Conditions of fitness of omnibuses" in Part IV of the said rules, after rule 166 and the note thereunder *insert* the following as a new rule, namely:—

"166A. The stability of an omnibus shall be such that when loaded with weights of 140 lbs. per person placed in the correct relative positions to represent the driver and conductor and a full complement of passengers in the case of a single-decked vehicle and a full complement of passengers on the upper deck only in the case of a double-decked vehicle, if the surface on which the vehicle stands were tilted to either side to an angle of 28° from the horizontal, the point at which overturning occurs would not be passed.

Provided that this rule shall not be enforced in respect of any bus licensed prior to the date of this notification or within three months after that date."

R. N. REID,
Chief Secy. to the Govt. of Bengal (offg.).

JUDICIAL DEPARTMENT.

Appointments and Transfers.

Noakhali.—No. 6232J.—24th August 1931.—In exercise of the powers conferred by sections 14 and 15 of the Code of Criminal Procedure, 1898 (Act V of 1898), the Governor in Council is pleased—

(*a*) to confer upon each of the gentlemen named below the powers of a Magistrate of the third class, in the district of Noakhali, for a period of three years from the date of this notification, and

(*b*) to direct him to sit as a member of the Sandip bench in the said district—

Babu Rajendra Kumar Nag.
Maulvi Halimullah Chaudhuri.

Noakhali.—No. 6234J.—24th August 1931.—In exercise of the powers conferred by sections 14 and 15 and the proviso to section 357 of the Code of Criminal Procedure, 1898 (Act V of 1898), the Governor in Council is pleased—

(*a*) to confer upon each of the gentlemen named below the powers of a Magistrate of the third class, in the district of Noakhali, for a period of three years from the 17th September 1931,

(*b*) to direct him to sit as a member of the second bench at Sandip in the said district, and

(*c*) to direct him to take down evidence in the English language—

Babu Sarada Kanta Banarji.
Maulvi Bazlor Rahman.

Tippera.—No. 6236J.—24th August 1931.—In exercise of the powers conferred by sections 14 and 15 and the proviso to section 357 of the Code of Criminal Procedure, 1898 (Act V of 1898), the Governor in Council is pleased—

(*a*) to confer upon each of the gentlemen named below the powers of a Magistrate of the second class, in the district of Tippera, for a period of three years from the 21st September 1931, in respect to such cases as may be made over to him within the limits of the Sadar subdivision of the said district,

(*b*) to direct that he shall, in addition to sitting singly, sit as a member of the Comilla bench in the said district, and

(*c*) to direct him to take down evidence in the English language—

Rai Satish Chandra Ray Bahadur.
Babu Medini Mohan Bardhan.

Dacca.—No. 6245J.—25th August 1931.—In exercise of the powers conferred by section 14 and the proviso to section 357 of the Code of Criminal Procedure, 1898 (Act V of 1898), the Governor in Council is pleased to confer upon Maulvi Syed Abdul Salim, an Honorary Magistrate of the Sadar bench, the powers of a Magistrate of the third class, in the district of Dacca, for the period during which he has been directed to sit as a member of the said bench, in respect to such cases as may be made over to him, when sitting singly, within the limits of the Sadar subdivision of the said district, and to direct him to take down evidence in the English language.

Burdwan-24-Parganas.—No. 6301J. — 27th August 1931.—Babu Kshirada Ranjan Dhar, Additional Subordinate Judge, Asansol, in the district of Burdwan, is appointed temporarily to be Subordinate Judge of the 24-Parganas, *vice* Babu Rajendra Kumar Gupta.

This cancels notification No. 4817J., dated the 25th June 1931, published at page 787, Part I of the *Calcutta Gazette*, dated the 9th July 1931.

Dacca.—No. 6320J.—27th August 1931.—In exercise of the power conferred by section 14 of the Code of Criminal Procedure, 1898 (Act V of 1898), the Governor in Council is pleased to confer upon each of the gentlemen named below the powers of a Magistrate of the third class, in the district of Dacca, for a period of three years from the date of this notification, in respect to such cases as may be made over to him sitting at Narayanganj within the limits of the Narayanganj subdivision of the said district:—

Rai Sahib Rajendra Kumar Ray.
Babu Satish Chandra Chakrabatti.

Dacca-Tippera.—No. 6323J.—28th August 1931.—Babu Rajendra Lal Chakrabatti, munsif and Registrar, Court of Small Causes, Munshiganj, in the district of Dacca, is appointed to act, until further orders, as Additional Subordinate Judge of Tippera, *vice* Babu Manmohan Banarji, on leave.

Dacca.—No. 6325J.—28th August 1931.—Babu Bhuban Mohan Ray Chaudhuri, munsif of Munshiganj, in the district of Dacca, is appointed, under section 12 (*1*) of the Provincial Small Cause Courts Act, 1887 (IX of 1887), to be Registrar of the Court of Small Causes, Munshiganj, *vice* Babu Rajendra Lal Chakrabatti.

Khulna-Dacca.—No. 6327J.—28th August 1931.—Babu Syamadas Chatarji, officiating munsif of Bagerhat, in the district of Khulna, is appointed to act, until further orders, as a munsif in the district of Dacca, to be ordinarily stationed at Munshiganj, *vice* Babu Bhuban Mohan Ray Chaudhuri.

Noakhali-Rajshahi-Malda. — No 6443J.—28th August 1931.—Maulvi Muhammad Sader Hossain, munsif of Sudharam, in the district of Noakhali, is appointed to be a munsif in the district of Rajshahi and Malda, to be ordinarily stationed at Nawabganj, *vice* Maulvi Muhammad Sirajul Islam.

Rajshahi-Malda-Noakhali. — No. 6445J.—28th August 1931.—Maulvi Muhammad Sirajul Islam, munsif of Nawabganj, in the district of Rajshahi and Malda, is appointed to be a munsif in the district of Noakhali, to be ordinarily stationed at Sudharam, *vice* Maulvi Muhammad Sader Hossain.

Calcutta.—No. 6454J.—29th August 1931.—Mr. Debendra Narain Bhattacharya, Advocate, High Court, Calcutta, is appointed to act as Deputy Superintendent and Remembrancer of Legal Affairs, Bengal, during the absence, on leave, of Mr. N. A. Khundkar, or until further orders.

Rangpur.—No. 6463J.—29th August 1931.—In exercise of the powers conferred by section 14 and the proviso to section 357 of the Code of Criminal Procedure, 1898 (Act V of 1898), the Governor in Council is pleased—

(*a*) to confer upon Babu Pramatha Bhusan Mukharji, the powers of a Magistrate of the third class, in the district of Rangpur, for a period of three years from the 27th September 1931, in respect to such cases as may be made over to him sitting at Lalmonirhat within the limits of the Kurigaon subdivision of the said district, and

(*b*) to direct him to take down evidence in the English language.

He is also empowered to take cognizance of cases under the Police Act V of 1861, the Gambling Act II of 1867 and under sections 112 and 113 of the Indian Railway Act arising within that part of Lalmonirhat to which the provisions of the said Acts have been extended.

Leave.

No. 6303J.—5th August 1931.—Babu Suresh Chandra Sen, No. I, munsif, who lately acted as 3rd Additional Subordinate Judge, Sylhet and Cachar, is allowed leave on average pay, on medical certificate, for the period from the 16th June to the 10th October 1931, under the proviso to rule 81 (*b*) (*a*) of the Fundamental Rules, and also permitted to affix thereto the civil court vacation of 1931, under rule 82 (*d*) of those rules.

Jessore.—No. 6304J.—14th August 1931.—Babu Charu Chandra Gangali, munsif of Jhenida, in the district of Jessore, is allowed leave on average pay for the period from the 7th September to the 10th October 1931, under rules 81 (*b*) (*ii*) and 82 (*b*) of the Fundamental Rules, and also permitted to affix thereto the civil court vacation of 1931, under rule 82 (*d*) of those rules.

Murshidabad.—No. 6305J.—14th August 1931.—Babu Tarani Kanta Nag, munsif of Lalbagh, in the district of Murshidabad, is allowed leave for the period from the 14th September to the 10th October 1931, viz., leave on average pay for nineteen days, under rules 81 (*b*) (*ii*) and 82 (*b*) of the Fundamental Rules, and leave on half average pay for the remaining period, under rule 81 (*d*) of those rules. He is also permitted to affix the civil court vacation of 1931 to the leave, under rule 82 (*d*) of the rules.

Chittagong.—No. 6306J. — 14th August 1931.—Maulvi Abdul Maleque, officiating munsif of North Raojan, in the district of Chittagong, is allowed extraordinary leave for fifteen days, under Subsidiary Rule 275 (*c*) of the Fundamental Rules, in extension of the leave granted to him under the orders of the 27th June 1931.

Khulna.—No. 6307J.—15th August 1931.—Maulvi Omer Mallik, munsif of Khulna (Sadar), is allowed leave on average pay, on medical certificate, for one month, under the proviso to rule 81 (*b*) (*ii*) of the Fundamental Rules, with effect from the 3rd August 1931.

Calcutta.—No. 6457J.—29th August 1931.—Mr. N. A. Khundkar, Barrister-at-Law, Deputy Superintendent and Remembrancer of Legal Affairs, Bengal, is allowed leave on average pay for one month, with effect from the date on which he may avail himself of it, under rule 99, read with rule 81 (*b*) (*ii*) of the Fundamental Rules.

NOTIFICATIONS.

Tippera.—No. 6270J.—27th August 1931.—In exercise of the power conferred by subsection (*1*) of section 13 of the Bengal, Agra and Assam Civil Courts Act, 1887 (XII of 1887), the Governor in Council is pleased to declare that the villages specified in the following schedule should henceforth be excluded from the local limits of the Nabinagar munsifi and included within the local limits of the Brahmanbaria munsifi in the district of Tippera:—

Schedule.

Names of villages.	General jurisdiction list number of thana Nabinagar.
Char Lalpur	... 167
Ditto	... 168
Lalpur Hosenpur	... 169
Sarippur	... 170
Bayek	... 171
Lausar	... 172
Bhabanipur	... 173
Araisidha	... 174
Char Chartala Bazar	... 175
Char Chartala	... 176
Jatrapur	... 177
Sonarampur	... 178
Baikunthapur	... 179
Baratala	... 180
Jagadispur	... 181
Naoghat	... 182
Tarua	... 184
Dagarisar	... 185

Bakarganj.—No. 6315J. — 27th August 1931.—In exercise of the power conferred by section 65 of the Bengal Village Self-Government Act, 1919 (Bengal Act V of 1919), the Governor in Council is pleased to appoint the following members of the Nachnapara union board within the Patharghata police-station in the Pirojpur subdivision of the Bakarganj district to be, during their term of office as such members, a union bench within the jurisdiction of the said union board for the purposes of that section:—

Munshi Muhammad Abdur Rashid Howladar.
Munshi Abdul Gafur Howladar.
Babu Purna Chandra Howladar.

Bakarganj.—No. 6316J. — 27th August 1931.—In exercise of the power conferred by section 73 of the Bengal Village Self-Government Act, 1919 (Bengal Act V of 1919), the Governor in Council is pleased to appoint the following members of the Nachnapara union board within the Patharghata police-station in the Pirojpur subdivision of the Bakarganj district to be, during their term of office as such members, a union court within the jurisdiction of the said union board for the purposes of that section:—

Munshi Muhammad Abdur Rashid Howladar.
Munshi Abdul Gafur Howladar.
Babu Purna Chandra Howladar.

Pabna.—No. 6330J.—28th August 1931.—In exercise of the power conferred by subsection (*1*) of section 13 of the Bengal, Agra and Assam Civil Courts Act, 1887 (XII of 1887), the Governor in Council is pleased to declare that the villages in the following schedule which are not at present included in any munsifi shall be included within the local

limits of the Sirajganj munsifi in the district of Pabna :—

Schedule.

Name of village.	Name of adjacent village.
Salimabad	Chauharia (J. L. No. 208 of police-station Shazadpur).
Pathrail	Hatail (J. L. No. 207 of police-station Shazadpur).
Hapania	Hatail (J. L. No. 207 of police-station Shazadpur).

Tippera.—No. 6354J.—28th August 1931. —In exercise of the power conferred by sub-section (*1*) of section 13 of the Bengal, Agra and Assam Civil Courts Act, 1887 (XII of 1887), the Governor in Council is pleased to declare that the villages mentioned in the following schedule shall be included within the local limits of the Chandpur munsifi in the district of Tippera :—

Schedule.

Names of villages.	General J. L. No. of thana Chandpur allotted under this notification.
Thak Char Laggimara	... 367
Char Jalalpur	... 368
Baher Char	... 369
Mear Char	... 370

Rajshahi.—No. 6448J.—29th August 1931. —In exercise of the power conferred by section 65 of the Bengal Village Self-Government Act, 1919 (Bengal Act V of 1919), the Governor in Council is pleased to appoint the following members of the union boards mentioned below to be, during their term of office as such members, union benches within the jurisdiction of the union boards of which they are, respectively, members for the purposes of that section :—

Rajshahi district.

Sadar subdivision.

Police-station Godagari.

Godagari union board.

Babu Durga Ram Bhakat.

Babu Adyanath Mazumdar.

Munshi Muhammad Hashiruddin Mandal.

Matikata union board.

Munshi Palanuddin Sarkar.

Munshi Osman Sarkar.

Babu Ramshwar Ray.

Police-station Mohonpur.

Dhurail union board.

Munshi Muhammad Kasimuddin Molla.

Hazi Kudratulla Sarkar.

Babu Radha Ballav Sarkar.

2. This notification will take effect from the date of the first meeting of the reconstituted union boards at which a quorum is present.

Rajshahi.—No. 6449J.—29th August 1931. —In exercise of the power conferred by section 73 of the Bengal Village Self-Government Act, 1919 (Bengal Act V of 1919), the Governor in Council is pleased to appoint the following members of the union boards mentioned below to be, during their term of office as such members, union courts within the jurisdiction of the union boards of which they are, respectively, members for the purposes of that section :—

Rajshahi district.

Sadar subdivision.

Police-station Godagari.

Godagari union board.

Babu Durga Ram Bhakat.

Babu Adyanath Mazumdar.

Munshi Muhammad Hashiruddin Mandal.

Matikata union board.

Munshi Palanuddin Sarkar.

Munshi Osman Sarkar.

Babu Ramshwar Ray.

Police-station Mohonpur

Dhurail union board.

Munshi Muhammad Kasimuddin Molla.

Hazi Kudratulla Sarkar.

Babu Ram Ballav Sarkar.

2. This notification will take effect from the date of the first meeting of the reconstituted union boards at which a quorum is present.

Rajshahi.—No. 6450J.—29th August 1931. —In exercise of the power conferred by section 65 of the Bengal Village Self-Government Act, 1919 (Bengal Act V of 1919), the Governor in Council is pleased to appoint the following members of the Talanda union board within the Tanor police-station in the Sadar subdivision of the Rajshahi district to be, during their term of office as such members, a union bench within the jurisdiction of the said union board for the purposes of that section :—

Babu Sasi Bhusan Ray.

Babu Radha Mohan Sanyal.

Munshi Ebadulla Sarkar.

Rajshahi.—No. 6451J.—29th August 1931. In exercise of the power conferred by section 73 of the Bengal Village Self-Government Act, 1919 (Bengal Act V of 1919), the Governor in Council is pleased to appoint the following members of the Talanda union board within the Tanor police-station in the Sadar subdivision of the Rajshahi district to be, during their term of office as such members, a union court within the jurisdiction of the said union board for the purposes of that section:—

Babu Sasi Bhusan Ray.
Babu Radha Mohan Sanyal.
Munshi Ebadulla Sarkar.

J. W. NELSON,
Secy. to the Govt. of Bengal.

LOCAL SELF-GOVERNMENT DEPARTMENT.

NOTIFICATION.

Minister-in-charge: The Hon'ble Mr. Bijoy Prasad Singh Roy.

Mymensingh. — No. 3297L.S.-G. — 25th August 1931.—In exercise of the power conferred by section 5 of the Bengal Village Self-Government Act, 1919 (Bengal Act V of 1919), read with section 22 of the General Clauses Act (Bengal Act I of 1899), and after consideration of the views of the Mymensingh district board and the Jamalpur local board, the Government of Bengal (Ministry of Local Self-Government) are pleased to direct that the notification No. 5036L.S.-G., dated the 12th December 1924, so far as it relates to the establishment of Lakshirchar, Tulshirchar and Betmari union boards in the Jamalpur subdivision of the Mymensingh district, as amended by notification No. 1117L.S.-G., dated the 27th March 1929, shall be further amended as follows:—

For the entries relating to the Lakshirchar and Tulshirchar unions in police-station Jamalpur and Betmari union in police-station Sherpur in the table appended to the said notification, *substitute* the following:—

Mymensingh district board.

Jamalpur local board.

Jamalpur police-station.

Lakshirchar union.

Names of mauzas constituting the union.	No. in the jurisdiction list.
Charpara ...	199
Gazariakhas ...	200
Baruamari ...	357
Charroy ...	358
Char Lakshi ...	360
Char Nandina ...	359
Jatharthapur ...	356

Tulshirchar union.

Names of mauzas constituting the union.	No. in the jurisdiction list.
Gazaria Rehai ..	201
Tepirchar ...	202
Chargarmara ...	437
Tulshirchar ..	439
Basuralgi ..	440
Digrirchar .	441
Manikerchar ...	442

Sherpur police-station.

Betmari union.

Subarnerchar ..	174
Dublai ...	196
Chugrakandi ...	197 (*b*)
Betmari ...	198
Charkharchar ..	203 (*b*)
Char Betmari (2nd portion) ...	207/2 (*b*)

Medical.

Minister-in-charge: The Hon'ble Mr. Bijoy Prasad Singh Roy.

Calcutta.—No. 2588Medl. — 21st August 1931.—Dr. Satish Chandra Mukherji, on supernumerary duty at the Medical College Hospitals, Calcutta, is appointed as an Emergency Officer of the hospitals, *vice* temporary Assistant Surgeon Dr. Manindra Priya Talukdar.

Calcutta.—No. 2589Medl — 21st August 1931.—Temporary Assistant Surgeon Dr. Manindra Priya Talukdar, an Emergency Officer, Medical College Hospitals, Calcutta, on relief, is placed on supernumerary duty at the hospitals.

Calcutta.—No. 2663Medl. — 26th August 1931.—Dr. Wahiduddin Mahmud, on relief from his officiating duties as House Surgeon, Presidency General Hospital, Calcutta, is placed on supernumerary duty at the hospital, with effect from the 10th August 1931.

Bakarganj.—No. 2680Medl.—28th August 1931.—Assistant Surgeon Dr. Homendra Nath Chatterji of the Patuakhali subdivision and dispensary is granted leave on average pay for four months, under rule 81 (*b*) (*ii*) of the Fundamental Rules, with effect from the date of relief.

Bakarganj.—No. 2681Medl.—28th August 1931.—Dr. Wahiduddin Mahmud on supernumerary duty at the Presidency General Hospital, Calcutta, is posted to the Bhola subdivision and dispensary, *vice* Dr. Indra Bhusan Mazumdar.

Bakarganj.—No. 2682Medl.—28th August 1931.—Dr. Indra Bhusan Mazumdar of the Bhola subdivision and dispensary is appointed as Medical Officer, Patuakhali subdivision and dispensary, *vice* Dr. Hemendra Nath Chatterji.

NOTIFICATION.

Minister-in-charge: The Hon'ble Mr. Bijoy Prasad Singh Roy.

No. 2666Medl.—27th August 1931.—It is hereby notified for general information that the Government of Bengal (Ministry of Local Self-Government) are pleased to make the following amendment in rule 7 (3) of the rules for the management, admission and training of students in the Government Medical Schools in Bengal, published under notification No. 1716Medl., dated the 30th June 1921, as subsequently amended, viz.:—

For the figure "16" *substitute* "15".

Public Health.

Minister-in-charge: The Hon'ble Mr. Bijoy Prasad Singh Roy.

Birbhum.—No. 1963P.H. — 28th August 1931.—In exercise of the powers conferred by section 290 of the Bengal Municipal Act, 1884 (Bengal Act III of 1884), the Government of Bengal (Ministry of Public Health) are pleased to make the following amendment in the rules published with notification No. 129-P.H., dated the 14th June 1928, subject to which the Commissioners of the Suri Municipality in the district of Birbhum, may allow communication-pipes to be laid down from the service-pipes of the Commissioners for the purpose of leading water to premises within the municipality for domestic purposes only:—

Amendment.

In sub-rule 1 (*a*) of rule 15 *for* the figures 2,000 *substitute* the figures 3,000

C. W. GURNER,
Secy. to the Govt. of Bengal.

Orders by the Surgeon-General with the Government of Bengal.

No. 14937.—25th August 1931.—The following seven Sub-Assistant Surgeons are promoted to the selection grade on a pay of Rs. 200 a month, with effect from the dates noted against their names:—

Dr. Satkari Gangully—3rd September 1930.

Dr. Bijoy Bhusan Bose—4th November 1930.

Dr. Satish Chandra Chakravertty—23rd December 1930.

Dr. Jatindra Mohan Sen Gupta—15th February 1931.

Dr. Rabindra Nath Mitra—16th February 1931.

Honorary Jamadar Dr. Shyamapada Roy Choudhury—16th May 1931.

Dr. Kanai Lal Sarkar- 19th June 1931.

W. V. COPPINGER, MAJOR-GENL., I.M.S.,
Surgn.-Genl. with the Govt. of Bengal.

EDUCATION DEPARTMENT.

Education.

NOTIFICATIONS.

Darjeeling.—No. 2374Edn.—29th August 1931.—Mr. C. A. Price, Middle School Master, Victoria Boys' School, Kurseong, has been granted by the High Commissioner for India leave without pay for eleven months and one day, in extension of the leave already granted to him.

Minister-in-charge: The Hon'ble Mr. K. Nazim-ud-Din, C.I.E.

Howrah.—No. 2329Edn. — 26th August 1931.—In exercise of the powers conferred by sub-section (2) of section 5 of the Charitable Endowments Act, 1890 (VI of 1890), and upon the application made by a majority of the persons acting in the administration of the "Ram Narain Basu English School Fund" through the Commissioner of the Burdwan Division, the Government of Bengal (Ministry of Education) are pleased to make the following amendment in notification No. 2486, dated the 16th July 1901 (published at page 912 of Part I of the *Calcutta Gazette* of the 17th July 1901), relating to the scheme for the administration of the said fund, namely—

In paragraph 10 of the third schedule to the said notification, *for* the word "five" *substitute* the word "four."

CALCUTTA, THE 27TH AUGUST 1931.

RESOLUTION—No. 2349Edn.

Minister-in-charge: The Hon'ble Mr. K. Nazim-ud-Din, C.I.E.

Read—

Resolution No. 1011Edn., dated the 7th May 1921, by the Government of Bengal (Ministry of Education).
Resolution No. 1165Edn., dated the 16th June 1922, by the Government of Bengal (Ministry of Education).
Resolution No. 1849Edn., dated the 22nd June 1923, by the Government of Bengal (Ministry of Education).
Resolution No. 2429Edn., dated the 26th July 1924, by the Government of Bengal (Ministry of Education).
Resolution No. 2199Edn., dated the 10th August 1925, by the Government of Bengal.
Resolution No. 2529Edn., dated the 27th July 1926, by the Government of Bengal.
Resolution No. 3537Edn., dated the 29th July 1927, by the Government of Bengal (Ministry of Education).
Resolution No. 2128Edn., dated the 18th July 1928, by the Government of Bengal (Ministry of Education).
Resolution No. 2445Edn., dated the 31st July 1929, by the Government of Bengal (Ministry of Education).
Resolution No. 1768Edn., dated the 24th May 1930, by the Government of Bengal (Ministry of Education).

As some further time is likely to elapse before the creation of a Provincial Board for Secondary Education on a statutory basis, the Government of Bengal have decided that the term of the Board of Intermediate and Secondary Education, Dacca, should be extended for a further period of one year with effect from the 1st July 1931.

The Board is reconstituted as follows:—

(1) Rai Lalit Mohan Chatterjee Bahadur, M.A., Chairman.
(2) The Commissioner, Dacca Division.
(3) The Vice-Chancellor, Dacca University, representative of the Dacca University.
(4) The Dean of the Faculty of Science of the Dacca University, representative of the Dacca University.
(5) The Dean of the Faculty of Arts of the Dacca University, representative of the Dacca University.
(6) Mr. Fida Ali Khan, M.A., representative of the Dacca University.
(7) Mr. Binay Kumar Sen, M.A., representative of the Calcutta University.
(8) Mr. Syamaprasad Mookherjee, M.A., B.L., Bar.-at-Law, representative of the Calcutta University.
(9) The Principal, Dacca Intermediate College, representative of the Intermediate Colleges in Dacca.
(10) The Principal, Jagannath Intermediate College, Dacca, representative of the Intermediate Colleges in Dacca.
(11) The Principal, Islamic Intermediate College, Dacca, representative of the Intermediate Colleges in Dacca.
(12) Khan Sahib Maulvi Muhammad Wahidulla, M.A., Principal, Islamic Intermediate College, Serajganj, representative of Intermediate Colleges outside Dacca.
(13) Superintendent, Hooghly Madrasah, representative of High Madrasahs.
(14) Mr. Badiur Rahman, B.SC., M.ED., (Leeds), officiating Head Master, Dacca Collegiate School, representative of the High English Schools in Dacca.
(15) Babu Prasanna Kumar Sen, Head Master, Pogose School, Dacca, representative of the High English Schools in Dacca.
(16) Maulvi Abdul Khaleq, Head Master, Dacca Government Moslem High School, representative of the High English Schools in Dacca.
(17) Miss R. B. Verulkar, officiating Principal, Eden High School for Girls, Dacca, representative of the High English Schools in Dacca.
(18) Rai Pyari Lal Das Bahadur, M.B.E., representative of the non-Muhammadan community at Dacca.
(19) Mr. P. K. Bose, Bar.-at-Law, representative of the non-Muhammadan community at Dacca.
(20) Rai Shashanka Kumar Ghosh Bahadur, C.I.E., Government Pleader, representative of the non-Muhammadan community at Dacca.
(21) Mr. Bipin Behari Mukherjee, Wari, Dacca, representative of the non-Muhammadan community at Dacca.
(22) Nawabzada Khwaja Muhammad Afzal Khan Bahadur, representative of the Muhammadan community at Dacca.
(23) Khan Bahadur Maulvi Quazi Zahirul Haq, representative of the Muhammadan community at Dacca.
(24) Mr. Mahmood Hasan, M.A. (Cal.), B.A., (Oxon.), representative of the Muhammadan community at Dacca.
(25) Khan Bahadur Maulvi Daliluddin Ahmad, representative of the Muhammadan community at Dacca.
(26) The Inspector of Schools, Dacca Division.
(27) The Principal, Teachers' Training College, Dacca.

The Secretary to the Board will be Khan Sahib Maulvi Abdur Rahman Khan, but he will not be a member of the Board.

The members are honorary. The Chairman and the Secretary will, however, be wholetime salaried officers.

The Board will exercise the same powers and functions as those which were prescribed in resolution No. 1011Edn., dated the 7th May 1921.

ORDER—Ordered that a copy of the resolution be published in the *Calcutta Gazette*.

By order of the Government of Bengal

(Ministry of Education),

A. J. DASH,

Secy. to the Govt. of Bengal.

Registration.

NOTIFICATIONS.

Minister-in-charge: The Hon'ble Mr. K. Nazim-ud-Din, C.I.E.

Malda.—No. 727Regn.—25th August 1931.—In exercise of the power conferred by section 3 of the Bengal Muhammadan Marriages and Divorces Registration Act, 1876 (Bengal Act I of 1876), the Government of Bengal (Ministry of Education) are pleased to appoint Maulvi Shamsuddin Ahmed temporarily to be a Muhammadan Registrar within the police-stations of Bamangola, Habibpur and Gajole, in the district of Malda.

Malda.—No. 728Regn.—25th August 1931.—In exercise of the power conferred by section 2 of the Kazis' Act, 1880 (Act XII of 1880), the Government of Bengal (Ministry of Education) are pleased to appoint Maulvi Shamsuddin Ahmed temporarily to be the Kazi for the celebration of marriages and the performance of other rites and ceremonies within the police-stations of Bamangola, Habibpur and Gajole, in the district of Malda.

Malda.—No. 731Regn.—25th August 1931.—In exercise of the power conferred by section 3 of the Bengal Muhammadan Marriages and Divorces Registration Act, 1876 (Bengal Act I of 1876), the Government of Bengal (Ministry of Education) are pleased to appoint Maulvi Shamsuddin Ahmed temporarily to be a Muhammadan Registrar within the police-stations of Kaliachak and Manikchak, in the district of Malda.

Malda.—No. 732Regn.—25th August 1931.—In exercise of the power conferred by section 2 of the Kazis' Act, 1880 (Act XII of 1880), the Government of Bengal (Ministry of Education) are pleased to appoint Maulvi Shamsuddin Ahmed temporarily to be the Kazi for the celebration of marriages and the performance of other rites and ceremonies within the police-stations of Kaliachak and Manikchak, in the district of Malda.

Bakarganj.—No. 737Regn.—28th August 1931.—In exercise of the power conferred by section 3 of the Bengal Muhammadan Marriages and Divorces Registration Act, 1876 (Bengal Act I of 1876), the Government of Bengal (Ministry of Education) are pleased to appoint Maulvi Shah Mofazzal Hossain temporarily to be a Muhammadan Registrar within the police-station of Sarupkati, in the district of Bakarganj, during the absence, on leave, of Maulvi Syed Shamsul Huda, or until further orders.

Bakarganj.—No. 738Regn.—28th August 1931.—In exercise of the power conferred by section 2 of the Kazis' Act, 1880 (Act XII of 1880), the Government of Bengal (Ministry of Education) are pleased to appoint Maulvi Shah Mofazzal Hossain temporarily to be the Kazi for the celebration of marriages and the performance of other rites and ceremonies within the police-station of Sarupkati, in the district of Bakarganj, during the absence, on leave, of Maulvi Syed Shamsul Huda, or until further orders.

Dacca. — No. 743Regn. — 28th August 1931.—In exercise of the power conferred by section 3 of the Bengal Muhammadan Marriages and Divorces Registration Act, 1876 (Bengal Act I of 1876), the Government of Bengal (Ministry of Education) are pleased to appoint Maulvi Abdul Mannan temporarily to be a Muhammadan Registrar within the police-station of Sibalay and unions Nos. I and II of the police-station of Daulatpur, in the district of Dacca, during the absence, on leave, of Maulvi Muhammad Ismail Khan, or until further orders.

Dacca. — No. 744Regn. — 28th August 1931.—In exercise of the power conferred by section 2 of the Kazis' Act, 1880 (Act XII of 1880), the Government of Bengal (Ministry of Education) are pleased to appoint Maulvi Abdul Mannan temporarily to be the Kazi for the celebration of marriages and the performance of other rites and ceremonies within the police-station of Sibalay and unions Nos I and II of the police-station of Daulatpur, in the district of Dacca, during the absence, on leave, of Maulvi Muhammad Ismail Khan, or until further orders.

Calcutta.—No. 756Regn. — 31st August 1931.—Khan Sahib Maulvi Saiyid Moshfiqus Saleheen, Sub-Registrar of Calcutta, is appointed to act as Registrar of Calcutta, with effect from the 1st August 1931, during the absence, on leave, of Khan Sahib Maulvi Abdul Majid, or until further orders.

Howrah-Calcutta.—No. 757Regn. — 31st August 1931.—Rai Sahib Mohim Chandra Batabyal, Sadar Sub-Registrar of Howrah, is appointed to act, until further orders, as Sub-Registrar of Calcutta, with effect from the date on which he takes over charge.

Rangpur-Howrah.—No. 758Regn. — 31st August 1931.—Maulvi Quazi Muhmud-ur-Rahman, Sadar Sub-Registrar of Rangpur, is appointed to be Sadar Sub-Registrar of Howrah, with effect from the date on which he joins the appointment.

Hooghly-Rangpur.—No. 759Regn. — 31st August 1931.—Babu Satish Chandra Banarji, officiating Sadar Sub-Registrar of Hooghly, is appointed to act as Sadar Sub-Registrar of Rangpur, with effect from the date on which he joins the appointment.

A. J. DASH,
Secy. to the Govt. of Bengal.

Orders by the Director of Public Instruction, Bengal.

BENGAL EDUCATIONAL SERVICE.

Dacca-Rajshahi Divn. — No. 28B. — 25th August 1931.—Maulvi Najmul Hossain Chaudhury, Assistant Master of Persian, Dacca Intermediate College, now officiating Assistant Inspector of Schools for Muhammadan Education, Rajshahi Division, in the Bengal Educational Service, is declared, in terms of rule 81 (*b*) (*ii*) of the Fundamental Rules, to have been on leave on average pay for twelve days, with effect from the 24th July 1931.

J. M. BOTTOMLEY,
Director of Public Instrn., Bengal (offg.).

Orders by the Inspector-General of Registration, Bengal.

Bakarganj-Mymensingh.—No. 559.—25th August 1931.—Maulvi Abul Husain, No. II, Sub-Registrar of Bhandaria, in the district of Bakarganj, is appointed to be Sub-Registrar of Dewanganj, in the district of Mymensingh.

Mymensingh. — No. 560. — 25th August 1931.—Maulvi Muhammad Israil, Sub-Registrar of Dewanganj, in the district of Mymensingh, is appointed to be Sub-Registrar of Kishoreganj in the same district.

Mymensingh.—No. 561. — 25th August 1931.—Babu Radhaballav Banik, Sub-Registrar of Seharail, in the district of Mymensingh, is appointed to be Sub-Registrar of Madan in the same district.

Mymensingh.—No. 562. — 25th August 1931.—Babu John Ballav Chaudhury, Sub-Registrar of Madan, in the district of Mymensingh, on leave, is appointed to be Sub-Registrar of Madarganj in the same district.

Mymensingh. — No. 563. — 25th August 1931.—Maulvi Mazharul Huq, No. III, Sub-Registrar of Madarganj, in the district of Mymensingh, is appointed to be Sub-Registrar of Seharail in the same district.

Dacca-Mymensingh. — No. 564. — 25th August 1931.—Maulvi Mataheral Karim, 2nd Joint Sub-Registrar of Kishoreganj, in the district of Mymensingh, is appointed to be Sub-Registrar of Kaliakair, in the district of Dacca.

Dacca-Mymensingh. — No 565. — 25th August 1931.—Maulvi Muhammad Amir Husain, Sub-Registrar of Kaliakair, in the district of Dacca, is appointed to be Sub-Registrar of Madhupur, in the district of Mymensingh.

Mymensingh.—No. 566. — 25th August 1931. — Maulvi Khalilur Rahman Khan Eusofzai, Probationary Sub-Registrar of Mymensingh, is appointed to act, until further orders, as 2nd Joint Sub-Registrar of Kishoreganj in the same district.

Jessore.—No. 567.—25th August 1931.—Babu Satish Chandra Banarji, Sub-Registrar, under orders of transfer to Rajganj, in the district of Jessore, is allowed leave on average pay for eight days, under rule 81 (*b*) (*ii*) of the Fundamental Rules, with effect from the 14th August 1931.

Bakarganj.—No. 568.—25th August 1931.—Babu Naresh Chandra Basu, Joint Sub-Registrar of Amtoli at Barguna, in the district of Bakarganj, is appointed to be Joint Sub-Registrar of Pirojpur at Kaukhali in the same district.

Bakarganj.—No. 569.—25th August 1931.—Maulvi Vilayet Ali Khan, officiating Joint Sub-Registrar of Pirojpur at Kaukhali, in the district of Bakarganj, is appointed to act, until further orders, as Joint Sub-Registrar of Amtoli at Barguna in the same district, with effect form the date on which he joins the appointment.

Mymensingh.—No. 570.—27th August 1931. Maulvi Tahjibuddin Ahmad, Sub-Registrar attached to Mymensingh, on being relieved of his officiating appointment as Sub-Registrar of Madan in the same district, is allowed leave on average pay for one month and ten days, under rule 81 (*b*) (*ii*) of the Fundamental Rules, with effect from the 27th July 1931.

Howrah.—No. 571.—27th August 1931.—Mr. Birendra Krishna Basu, Sub-Registrar of Ulubaria, in the district of Howrah, is allowed leave on average pay for fifteen days, under rule 81 (*b*) (*ii*) of the Fundamental Rules, in extension of the leave granted to him in this department notification No. 471, dated the 15th July 1931.

Hooghly.—No. 572.—27th August 1931.—Babu Gobinda Charan Samanta, Sub-Registrar, on leave, is appointed to be Sub-Registrar of Khanakul, in the district of Hooghly.

Dacca.—No. 573.—27th August 1931.—Maulvi Chaudhury Wahiuddin Ahmed Siddique, Sub-Registrar attached to Dacca, is allowed leave on average pay for three days, under rule 81 (*b*) (*ii*) of the Fundamental Rules, with effect from the 19th March 1931.

Dacca.—No. 574.—27th August 1931.—Maulvi Chaudhury Wahiuddin Ahmed Siddique, Sub-Registrar attached to Dacca, is allowed leave on average pay for fifteen days, under rule 81 (*b*) (*ii*) of the Fundamental Rules, with effect from the 7th April 1931.

This cancels this department notification No. 405, dated the 12th June 1931, granting leave on average pay for twenty days to Maulvi Chaudhury Wahiuddin Ahmed Siddique from the 7th April 1931.

Dacca.—No. 575.—27th August 1931.—Maulvi Chaudhury Wahiuddin Ahmed Siddique, Sub-Registrar attached to Dacca, is allowed leave on average pay for fifteen days, under rule 81 (*b*) (*ii*) of the Fundamental Rules, with effect from the 27th June 1931.

Dacca-Bakarganj.—No. 576.—27th August 1931.—Maulvi Muhammad Jalaluddin, Probationary Sub-Registrar of Dacca, acted as Sub-Registrar of Nazirpur, in the district of Bakarganj, from the afternoon of the 13th July 1931 to the 12th August 1931.

Noakhali.—No. 577.—28th August 1931.—Maulvi Ayub Ali Chaudhuri, Sub-Registrar, on leave, is appointed to be Joint Sub-Registrar of Hatiya at Ramgati, in the district of Noakhali.

Nadia.—No. 578.—28th August 1931.—Babu Narmada Ranjan Das Gupta, Sub-Registrar attached to Krishnagar, Nadia, is allowed leave on average pay for twenty-eight days, under rule 81 (*b*) (*ii*) of the Fundamental Rules, with effect from the 28th July 1931.

No. 579.—28th August 1931.—In line 2 of Registration Department notification No. 553, dated the 18th August 1931, published on page 1012 of the *Calcutta Gazette* (Part I), dated the 27th August 1931, *for* "Maulvi Khwajah Muhammad Salim" *read* "Maulvi Khwajah Muhammad Bedar Bakht."

Dacca. -No. 580.—28th August 1931.—Maulvi Muhammad Mujibul Huq, Sub-Registrar of Jaymantap, in the district of Dacca, is allowed leave on average pay for ten days, under rule 81 (*b*) (*ii*) of the Fundamental Rules, with effect from the 16th July 1931.

Dacca.—No. 581.—28th August 1931.—Maulvi Saiyid Habibur Rahman, Sub-Registrar attached to Dacca, acted as Sub-Registrar of Jaymantap in the same district from the 16th July 1931 to the 25th July 1931, during the absence, on leave, of Maulvi Muhammad Majibul Huq, Sub-Registrar.

Mymensingh.—No. 582.—28th August 1931.—Babu John Ballav Chaudhuri, Sub-Registrar of Madan, in the district of Mymensingh, under orders of transfer to Madarganj in the same district, is allowed leave on average pay for one month, under rule 81 (*b*) (*ii*) of the Fundamental Rules, in extension of the leave granted to him in this department notification No. 353, dated the 25th May 1931.

Bankura.—No. 583.—28th August 1931.—Maulvi Saiyid Dilwar Ali Mirza, Sub-Registrar of Sonamukhi, in the district of Bankura, is allowed leave on average pay for one month, under rule 81 (*b*) (*ii*) of the Fundamental Rules, with effect from the 28th August 1931.

Bankura.—No. 584.—28th August 1931.—Maulvi Abu Sayeed, Sub-Registrar attached to Bankura, is appointed to act as Sub-Registrar of Sonamukhi in the same district, with effect from the date on which he joins the appointment.

Faridpur.—No. 585.—29th August 1931.—Maulvi Shaik Yusuf Ali, Sub-Registrar of Baliakandi, in the district of Faridpur, on leave, is appointed to be Sub-Registrar of Pangsa in the same district.

Dacca.—No. 586.—29th August 1931.—Maulvi Qazi Abdul Majid, Sub-Registrar of Sreenagar, in the district of Dacca, is allowed leave on average pay for fifteen days, under rule 81 (*b*) (*ii*) of the Fundamental Rules, with effect from the 18th August 1931, or from any subsequent date on which he may be relieved.

Jessore.—No. 587.—29th August 1931.—Babu Satish Chandra Banarji, Sub-Registrar, under orders of transfer to Rajganj, in the district of Jessore, is allowed leave on average pay for six days, under rule 81 (*b*) (*ii*) of the Fundamental Rules, in extension of the leave granted to him in this department notification No. 567, dated the 25th August 1931.

Mymensingh-Dinajpur.—No. 588. — 31st August 1931.—Babu Suresh Chandra Patranavis, Sub-Registrar of Gaffargaon, in the district of Mymensingh, is appointed to be Sub-Registrar of Balurghat, in the district of Dinajpur.

Mymensingh.—No. 589.—31st August 1931.—Maulvi Abu Yusuf Wahidul Huq, officiating Sub-Registrar of Jamalpur, in the district of Mymensingh, is appointed to be Sub-Registrar of Gaffargaon in the same district.

Dinajpur.—No. 590.—31st August 1931.—Babu Atulya Dhan Bagchi, Sub-Registrar of Balurghat, in the district of Dinajpur, is posted to Sadar Registration office at Dinajpur.

Burdwan-Hooghly.—No. 591.—31st August 1931.—Maulvi Saiyid Afzal Ali, Sub-Registrar of Khandghosh, in the district of Burdwan, is appointed to be Sub-Registrar of Goghat, in the district of Hooghly.

Hooghly-Burdwan.—No. 592.—31st August 1931.—Maulvi Shaikh Lutfar Rahman, Sub-Registrar of Goghat, in the district of Hooghly, is appointed to be Sub-Registrar of Khandghosh, in the district of Burdwan.

S. AHMED,
Inspector-General of Regn., Bengal.

FINANCE DEPARTMENT.

Finance.

NOTIFICATION.

No. 3807-F.—26th August 1931.—The Government of Bengal are pleased to declare that the dates of effect of all provincial rules (issued since 12th August 1929 and to be issued hereafter) adopting the amendments sanctioned by the Secretary of State to the Fundamental Rules will, unless otherwise expressly stated, be the same as the dates from which they are applicable to the members of the All-India Services.

Audit.

ADDENDA AND CORRIGENDA.

No. 3843 F.—29th August 1931.—The following corrections, which have been authorised, are published for general information :—

The Fundamental and Subsidiary Rules, 1st Edition (Reprint), 1929.

Pages 372-374—Appendix No. 24.—*Delete* this Appendix.

The Bengal Financial Rules, 1st Edition (Reprint), 1930.

Page 57.—*Insert* the following as section II (*a*) between rules 164 and 165 :—

Section II(a)—Special Rules for Irrigation Projects.

164. (*a*) The special rules for the submission of estimates for, and construction of, Irrigation, Navigation, Embankment, Drainage and Water Storage Works, the cost of which exceeds the power of sanction of Provincial Government, are printed separately.

Page 372A.—*Insert* the following as a memorandum :—

Memorandum giving the description and numbers of the Bengal Forms corresponding to the T. O. Forms Nos. 1 to 14, and certain other forms that are used by the local officers and also by the Treasuries for purposes other than the maintenance of accounts in the Treasuries, and for rendering accounts to the Accountant-General, Bengal.

Serial No.	Bengal Form No.	Brief description.	T. O. No., if any.
1	70	(Outer sheet)—Indent for Bengal Standard and Non-standard Forms ..	..
2	71	(Inner sheet)—Indent for Bengal Standard and Non-standard Forms ..	..
3	2298	Register of Pension Payment Orders	10
4	2374	District Officers' Certificate of Transfer of charge	13
5	2380	Chalan form in English, Bengali and Hindi	..
6	2381	Chalan form in triplicate	..
7	2382	Land Revenue and Road and Public Work Cess chalan form, in English and Bengali.	
8	2383	Chalan form of taccavi loans, in English and Bengali	..
9	2385	Chalan form—Trust Fund	..
10	2386	Register of items under objection.	..
11	2389	Cheque book for payment of diet and travelling expenses of complainants and witnesses.	
12	2392	Calcutta Land Revenue chalan, in English and Bengali	..
13	2393	Requisition for public service transfer receipts	..
14	2394	Indent for service postage stamps for Calcutta officers	..
15	2395	Application for leave of absence by gazetted officers	..
16	2396	Application for privilege leave by uncovenanted judicial officers ..	..
17	2397	Application for pension or gratuity for non-gazetted officers (C. S. R. No. 25)	..
18	2398	Application for pension or gratuity for gazetted officers (C. S. R. No. 26) ..	
19	2399	Application for an extraordinary pension or gratuity for the family of the person killed in the execution of duty (C. S. R. No. 22).	
20	2400	Slip containing thumb impressions of pensioners	..
21	2403	Certificate of transfer of charge (Rule 57, B. F. R.)	..
22	2408	Application for arrears of pension	..
23	2410	Rules for the inspection of Treasuries (stitched)	..
24	2411	Commission bill of ex-officio Sub-Registrars—0—Registration ..	..
25	2412	Acquittance roll of establishment	..
26	2413	Acquittance roll of establishment (old form)	..
27	2418	Big lot payment vouchers in English, Bengali, Hindi and Uriya ..	..
28	2419	Bill for refunds of revenue	12
20	2420	Bill for refunds of cost price of distillery spirits	..
30	2421	Voucher for deposit repayments in English, Bengali, Hindi and Urdu ..	..
31	2422	Bill for superannuation pension in English	..
32	2423	Bill for superannuation pension in English and Bengali ..	..
33	2426	Bill for political pension	..
34	2427	Bill for pension chargeable, etc.	..
35	2428	Salary bill of gazetted officers	1
36	2429	Salary bill of gazetted officers payable at the Presidency (Indian Civil) ..	1

Serial No.	Bengal Form No.	Brief description.	T. O. No., if any.
37	2430	Salary bill for military officers in civil employment	1
38	2431	Salary bill—Miscellaneous	1
39	2433	Establishment pay bill (full sheet)	3
40	2434	Establishment pay bill of Police Department (white with red ink letter press)	3
41	2435	Establishment pay bill for Jail Department	3
42	2436	Establishment pay bill (half sheet)	3
43	2438	Consolidated absentee statement	4
44	2439	Detailed statement showing calculation of initial pay	..
45	2440	Detailed statement of permanent establishment as stood on 1st April ..	..
46	2441	Contribution Provident Fund deductions from earnings of copyists and typists.	..
47	2442	Periodical increment certificate	5
48	2444	Bill for diet and travelling allowance to witnesses	..
49	2445	Bill for travelling allowances of gazetted officers	2
50	2446	Bill for travelling allowances of ministerial officers..	6
51	2447	Bill for travelling allowances for Police Department (book of 100 sheets in duplicate).	6
52	2448	Bill for remuneration to amins in partition establishment	..
53	2449	Abstract contingent bill —" 43—Famine "	..
54	2453	Abstract contingent bill—" 25—Jails and Convict Settlements, Jail manufactures ".	..
55	2457	Contract contingent bill - Head "47—Miscellaneous "	..
56	2459	Contract contingent bill—All other departments in which the contract grant is in force.	..
57	2460	Bill for service postage stamps	..
58	2461	Contract contingent bill —" 22—General Administration "	..
59	2462	Contract contingent bill —" 6—Excise Department "	..
60	2463	Contract contingent bill —" 46—Stationery and Printing "	..
61	2464	Contract contingent bill—" 26—Police Department "	..
62	2465	Contract contingent bill—" 32—Medical "	..
63	2467	Form No. 23A—Detailed bill of famine expenditure— " 43—Famine " ..	..
64	2468	Contingent bill—" 37—Miscellaneous Departments " (Census) ..	..
65	2469	Statement of buildings for which municipal taxes are drawn	..
66	2470	Contingent bill—" 5—Land Revenue "	..
67	2472	Contingent bill—" 6—Excise "	..
68	2475	Contingent bill—" 22—General Administration "	..
69	2476	Contingent bill — " 24—Administration of Justice " ..	..
70	2477	Contingent bill—" 25—Jails and Convict Settlements " (Inspector-General of Prisons, Jail Depot, charges for Police custody).	..
71	2478	Abstract contingent bill —" 25—Jails and Convict Settlements " ..	..
72	2480	Contingent bill—" 26—Police " (stitched)	..
73	2481	Contingent bill—" 27—Ports and Pilotage "	..
74	2482	Contingent bill—" 31—Education", complete form (stitched) ..	..
75	2484	Contingent bill—" 32—Medical "	..
76	2485	Contingent bill—" 33—Public Health "	..
77	2487	Contingent bill—" 34—Agriculture "	..
78	2488	Contingent bill—" 35—Industries "	..
79	2489	Contingent bill—" 46—Stationery and Printing including Press and Forms Department."	..
80	2490	Contingent bill—" 47—Miscellaneous "	..
81	2492	Contingent bill—Other departments in which non-contract grants are in force	..
82	2494	Contingent bill—" 37—Miscellaneous Departments "	..
83	2496	Bill for compensation for land	..
84	2497	Land acquisition cheque book (Calcutta Improvement Trust)	..
85	2498	Bill for remuneration to copyists	..
86	2499	Bill for fixed temporary malikana	..

Serial No.	Bengal Form No.	Brief description.	T. O. No., if any.
87	2502	Pay bill of Sub-Assistant Surgeons	
88	2503	Pay bill of extra establishment of Registration Department	
89	2504	Bill for refund of copying fees	
90	2506	L. P. C. for gazetted officers	
91	2507	Consolidated voucher in land acquisition cases	
92	2508	L. P. C. for ministerial officers	
93	2509	Service roll (for inferior servants)	
94	2510	Pass book—Municipal	
95	2511	Pass book—Public Works	
96	2512	Pass book—District Board Fund	
97	2513	Pass book—District Fund	
98	2514	Pass book—Chaukidari Reward Fund	
99	2515	Pass book—Union Fund	
100	2516	Pass book—Cantonment Fund	
101	2517	Pass book—Court of Small Causes, Calcutta	
102	2518	Pass book for jails and sub-jails	
103	2519	Bank pass book with shipping office	
104	2520	Bank pass book of the Protector of Emigrants	
105	2521	Pass book of the Opium Department	
106	2522	Pass book of Reformatory Schools	
107	2523	Pass book of dispensaries	
108	2524	Pass book of the Settlement Department	
109	2525	Pass book of the Darjeeling Improvement Fund	
110	2526	Pass book for Police Department	
111	2528	Daily advice list of payment orders issued by Judges	
112	2529	Daily advice list of receipts and payments on account of Local Fund	
113	2530	Court's daily advice list of cheques issued on the Treasury	
114	2536	Government Pleader's bill for fixed monthly allowances	
115	2537	Reappropriation statement	
116	2539	Detailed contingent bill countersigned before payment (full sheet, and blue)	9
117	2540	Detailed contingent bill countersigned before payment (half sheet) ..	9
118	2551	Acknowledgment receipt form	
119	2569	Monthly statement of credit notes issued	
120	2581	Bill form for supplies to other departments (Forest)	
121	2582	Form of daily labour (full sheet) (Forest)	
122	2583	Form of daily labour (half sheet) (Forest)	
123	2584	Abstract of entries (full sheet) (Forest)	
124	2585	Abstract of entries (half sheet) (Forest)	
125	2586	Classified abstract of expenditure (full sheet) (Forest)	
126	2587	Classified abstract of revenue (half sheet) (Forest)	
127	2591	Record of sanctioned works	
128	2591	Record of sanctioned works (in half sheets) (Forest)	
129	2596	Voucher, small size (Forest)	
130	2597	Voucher, large size (Forest)	
131	2598	Contractor's and disburser's ledger (Forest)	
132	2599	Contractor's and disburser's ledger (Forest)	
133	2601	Objection statement (half sheet) (Forest)	
134	2602	Schedule of I. C. S. Annuity Fund deduction	
135	2603	Stock abstract book (Public Works Department)	
136	2621	Travelling Allowance Journal of Public Works Department establishment	7
137	2622	Abstract travelling allowance bill of Public Works Department establishment	8
138	2624	Claim for the payment of overseas pay in England	
139	4763	Treasury Remittance Book	14

E. N. BLANDY,
Secy. to the Govt. of Bengal.

COMMERCE DEPARTMENT.

DECLARATION.

No. 4269Com. — 26th August 1931. — Whereas certain land was acquired by Government, under the provisions of Act I of 1894 and Act XVIII of 1885, for a public purpose, viz., for such portion of Toposi-Baraboni Chord, East Indian Railway, as lies between chainage 364·76 and chainage 385·42 and as is edged with pink on plan L.A.M.A. No. 614, and whereas coal mines at Girimint colliery are situate under the said land, and whereas the Girimint Coal Company, Limited, have given notice to Government, in accordance with the provisions of Act XVIII of 1885, that the said Company intend to work the seam known as the Poriharpur seam, and whereas the mines have been inspected by the officer appointed by Government for the purpose under section 5 (*l*) of Act XVIII of 1885, and whereas it appears to the Government that the working out of the coal of the mines underlying the said land is likely to cause damage to the surface of the said land and to the works constructed thereon, and whereas Government is willing to pay compensation to all parties having interest in the said mines underlying the said land, and whereas the said Girimint Coal Company, Limited, have agreed not to work and get minerals underlying the land acquired for their siding, or underlying the land acquired for the branch or other lines with which the siding is connected or underlying the land of the branch or branches connecting the said siding with the main line, in such a manner as to injure or to endanger the safety of the undertaking or any part thereof, nor to claim any compensation for any restricted working:—

Now, therefore, the Governor in Council is pleased to declare, under section 5, sub-section (*2*), clause (*b*) of the abovementioned Act XVIII of 1885, that the working shall be carried on by the said Girimint Coal Company, Limted, in the manner and subject to the restrictions below specified, viz.:—

(1) No gallery shall be driven nor shall any coal be extracted under the areas hatched with yellow on the plan.

(2) No gallery shall be driven nor shall any coal be extracted where the distance from the natural surface of the ground or the bottom of an artificial cutting to the top of the excavation, if made, is less than 50 feet.

(3) Where the distance from the natural surface of the ground or the bottom of an artificial cutting to the top of the excavation, if made, is 50 feet or more, galleries, not exceeding 15 feet in width by 10 feet in height, may be driven as shown approximately by the red centre lines on the plan. The pillars so formed shall be left unworked.

(4) Manholes, not exceeding 6 feet in height by 3 feet in width by 4 feet in depth, may be made where required by any rules made under the Indian Mines Act, 1923.

(5) Any inrush of water, quicksand or soft material shall be reported to the Chief Inspector of Mines without delay.

(6) Any collapse of workings or symptoms of collapse or crush which may endanger the stability of the acquired land shall be reported to the Chief Inspector of Mines without delay.

(7) These restrictions apply to the Poriharpur seam only at Girimint colliery and to the area edged with pink on the plan, and the Girimint Coal Company, Limited, shall give notice under section IV of the Land Acquisition (Mines) Act, 1885, of their intention to work any other seam under such area or to work coal under any other area of acquired land.

The plan marked L.A.M.A. No. 614, signed by the Chief Inspector of Mines, may be seen in the office of the Chief Inspector of Mines in India by the parties concerned.

E. N. BLANDY,
Secy. to the Govt. of Bengal.

PUBLIC WORKS DEPARTMENT.

Establishment.

NOTIFICATIONS.

Minister-in-charge: The Hon'ble Khan Bahadur Maulvi K. G. M. Faroqui.

No. 49.—24th August 1931.—In continuation of Bengal Government notification No. 48, dated the 12th August 1931, Babu Sailendra Nath Mazumdar, Assistant Engineer, is posted to the 2nd Calcutta Division in the Presidency Circle.

L. R. FAWCUS,
Secy. to the Govt. of Bengal.

No. 50. — 26th August 1931. — Babu Jogendra Kumar Guha, Assistant Engineer, Dacca Division, is granted, under rule 81 (*b*) (*i*) of the Fundamental Rules, leave on average pay for one month, with effect from the 1st August 1931.

W. J. KERR,
Chief Engineer (offg.).

IRRIGATION DEPARTMENT.

Establishment.

NOTIFICATIONS.

No. 10-C.I.E.—27th August 1931.—Babu Prasad Das Sen Gupta, Assistant Engineer, is, on return from leave, posted to the Khulna Division.

No. 11-C.I.E.—27th August 1931.—Babu Joy Kumar Sarkar, Assistant Engineer, is transferred in the interest of the public service from the Khulna to the Cossye Division.

S. N. BANERJEE,
Chief Engineer (offg.).

DEPARTMENT OF AGRICULTURE AND INDUSTRIES.

Agriculture.

NOTIFICATION.

Minister-in-charge: The Hon'ble Khan Bahadur Maulvi K. G. M. Faroqui.

No. 3963Agri.—29th August 1931.—Mr. F. J. Gossip, Live-Stock Expert to the Government of Bengal, has been granted by the High Commissioner for India an extension of leave on half average pay for seven days, with effect from the 26th November 1931.

Excise.

NOTIFICATIONS.

Minister-in-charge: The Hon'ble Mr Bijoy Prasad Singh Roy.

Calcutta.—No. 3910Ex.—27th August 1931.—Maulvi Shafiqur Rahman Siddik, Inspector of Excise and Salt, acted as Superintendent of Excise and Salt, Detection Branch, Calcutta, during the period from the 1st to the 5th July 1931, both days inclusive, *vice* Maulvi Mobinuddin Ahmed, appointed to officiate as Deputy Commissioner of Excise and Salt, Bengal.

Rajshahi.—No. 3940Ex.—28th August 1931.—Babu Ranajit Chandra Chaudhuri, Superintendent of Excise and Salt, Naogoan, Rajshahi, is allowed leave on average pay for fourteen days, under rule 81 (*b*) (*ii*) of the Fundamental Rules, in extension of the leave granted to him under orders of the 6th August 1931.

Bakarganj.—No. 4010Ex. — 31st August 1931.—Maulvi Azizul Islam, Inspector of Excise and Salt, Bakarganj, was appointed to hold charge of the district, with effect from the 19th May 1931.

This cancels notification No. 253T.A.I., dated the 18th June 1931.

L. R. FAWCUS,

Secy. to the Govt. of Bengal.

Orders by the Director of Agriculture, Bengal.

No. 410T A.—31st August 1931.—Mr. P. C. Chaudhuri, Deputy Director of Sericulture, Bengal, is allowed, under rule 81 (*b*) (*ii*) of the Fundamental Rules, leave on average pay for twenty-four days, with effect from the 21st September 1931, with permission to affix the Puja holidays to his leave.

R. S. FINLOW,

Director of Agriculture, Bengal.

Orders by the Registrar of Co-operative Societies, Bengal.

No. 13-L.—6th August 1931.—Whereas I am of opinion, as the result of an enquiry held into the constitution, working and financial condition of the Mirzapur Joutha Samity (registered No. 34 of 1924), in the subdivision Balurghat in the district of Dinajpur, under sub-section (*1*) of section 35 of the Co-operative Societies Act, II of 1912, that the society ought to be dissolved.

Now, therefore, in exercise of the power conferred by sub-section (*1*) of section 39 of the same Act, I hereby cancel the registration of the said society.

And further, in exercise of the power conferred by sub-section (*1*) of section 42 of the same Act, I hereby appoint the Inspector of Co-operative Societies, Balurghat, to be liquidator of the said society.

No. 14-L.—12th August 1931.—Whereas I am of opinion, as the result of an enquiry held into the constitution, working and financial condition of the Nischindapur Samabaya Samity (registered No. 234 of 1923), in the subdivision Basirhat, in the district of 24-Parganas, under sub-section (*1*) of section 35 of the Co-operative Societies Act, II of 1912, that the society ought to be dissolved.

Now, therefore, in exercise of the power conferred by sub-section (*1*) of section 39 of the same Act, I hereby cancel the registration of the said society.

And further, in exercise of the power conferred by sub-section (*1*) of section 42 of the same Act, I hereby appoint the Departmental Officer in charge of Co-operative Societies, Basirhat Circle, to be liquidator of the said society.

S. K. GANGULY,

Regr., Co-operative Societies, Bengal.

Orders by the Commissioner of Excise and Salt, Bengal.

No. 12Ex.—27th August 1931.—Maulvi Abbas Ali Khan, Inspector of Excise and Salt, Hooghly, is allowed leave on average pay for one month and thirteen days from the 2nd September 1931.

He is permitted to affix Durga Puja holidays to his leave.

S. K. RAHA,

Commr. of Excise and Salt, Bengal.

REVENUE DEPARTMENT.

Land Revenue.

NOTIFICATIONS.

Malda.—No. 10808L.R.—29th August 1931.—Under the provisions of section 3 (*14*) of the Bengal Tenancy Act, 1885 (Act VIII of 1885), Babu Surendra Nath Dasgupta, Settlement Kanungo, is authorised to discharge, in the district of Malda, the functions of a Revenue Officer, under Chapter X of that Act, so far as they relate to surveys and the preparation of record-of-rights.

No. 10898L.R.—29th August 1931.—In modification of this department notification No. 9375L.R., dated the 31st July 1931, Babu Chinta Haran Das Gupta, Deputy Collector, is allowed leave on average pay for the period from the 4th May 1931 to the 5th June 1931, under the proviso to rule 81 (*b*) (*ii*) of the Fundamental Rules, in extension of the leave already granted to him in this department notification No. 4480-L.R., dated the 27th March 1931.

No. 10954L.R.—31st August 1931.—In pursuance of the provisions of sub-section (*2*) of section 158A of the Bengal Tenancy Act, 1885 (VIII of 1885), and in supersession of notification No. 4794L.R., dated the 12th March 1929, the Governor in Council is pleased to specify the following terms and conditions on which applications made under the said section may be allowed, namely:—

Terms and conditions.

In these terms and conditions the expression—

(*a*) "The Act" means the Bengal Tenancy Act, 1885, and

(*b*) "landlord" means landlord referred to in section 158A of the Act.

1. One copy of the last finally published record, which will be supplied by the landlord, shall be revised and maintained by Government in such manner as the Local Government may, by rules, from time to time, direct. This copy after revision shall be the maintained record.

2. Only the khatians of tenants (whether rent-paying or rent-free) holding directly under the landlord other than *patnidars*, from whom the rent may be realised under Regulation VIII of 1819, shall be maintained. The records of *utbandi* tenancies shall not be maintained. Once the records have been brought up to date, they will, for the purpose of maintenance, be attested once every three years or at such longer intervals as the Local Government may direct.

3. The entire estimated cost of revision and maintenance during any year shall be payable in advance by the landlord before the 15th September of that year, unless the Local Government allows it to be paid in two or more instalments, in which case the first instalment shall be paid before the aforesaid date and the remaining instalment or instalments by such dates as may be fixed by the Local Government. The balance, if there be any, after the actual cost has been ascertained, shall be payable within one month from the date of demand. If the amount already deposited exceeds the actual cost the balance will be refunded to the landlord or if he so desires will be carried to the account of the next revision.

The Director of Land Records shall in the case of any dispute be the sole judge of the amount of cost to be paid by the landlord.

The landlord shall execute an agreement whereby any sum payable by him under this condition shall be recoverable as a public demand.

4. The maintenance staff shall be independent of the landlord's staff but the latter shall co-operate and give all possible assistance in the maintenance proceedings. They shall also help in securing attendance of tenants during maintenance operations.

5. Simultaneously with the deposit of the estimated cost or part of the estimated cost, as the case may be, the landlord shall furnish for the use of the Maintenance Officer a list containing all available information, regarding changes in tenants, transfers, amalgamations and subdivisions of tenancies, new settlements, arrangements made with tenants for alterations of rent in respect of alterations in area, cases where non-occupancy raiyats have become occupancy or settled raiyats and all other changes affecting khatians to be maintained.

6. Unless the estimated cost or the first instalment of it, if an instalment has been granted, is deposited and the list aforesaid furnished before the 15th September the work will not be started in the year.

7. (*a*) The following procedure is prescribed with reference to transfers made before the 2nd April 1929 by sale, gift or will, of tenancies recorded as raiyati in the original or maintained record. At the first attestation after the discovery of the transfer, the transferee will be recorded as being in possession, but not as a tenant unless he has been duly recognised by the landlord. At the next attestation the transferee will be recorded as a tenant unless legal proceedings to eject him have been instituted. Until the transferee has been recorded as a tenant the Certificate Officer will treat the transferor as liable for the rent, but after the transferee has been recorded as a tenant, he will treat the transferee as liable. These provisions apply only to transfers of whole tenancies.

(*b*) In the case of transfers of specific fields or shares in raiyati holdings made before the 2nd April 1929, the possession of the transferee will be recorded at the first attestation after the discovery of the transfer, but no further steps will be taken either to record the transferee as a joint tenant, or to treat his purchase as a separate tenancy, unless with the express consent in writing of the landlord or his duly authorised agent.

(*c*) Transfer of raiyati holdings at fixed rents or rates of rent, and of occupancy holdings or of specific fields or shares of them made on the 2nd April 1929, or thereafter, will be recorded at attestation on the production of registered documents of transfer and the names of the transferees will be noted in the proper columns.

(*d*) No arrangements will be made by the Maintenance Officer to ascertain increase or decrease of area in order to determine whether there should be an increase or decrease of rent. Only increase or decrease of rent in respect of increase or decrease of area already legally agreed upon will be recorded by the Maintenance Officer.

8. The landlord's staff is expected to collect the bulk of the rents. The Certificate Officer shall, when in doubt as to whether a certificate should be issued, refer the case to the Collector who may, on recording his reasons, refuse to issue a certificate in individual cases. As a safeguard against too much use of the

certificate procedure, Government may also, without assigning any reason, refuse to issue certificates in the case of particular classes of requisitions or requisitions generally.

9. Before proceeding to issue a certificate against any tenant, the Certificate Officer shall issue a post-card notice in the form in Schedule A annexed hereto. The notice shall be printed by the estate and made over to the Certificate Officer with all particulars of the demand up to date filled up and addressed to the chief co-sharer recorded in column 13 of the khatian. The Certificate Officer shall not issue a certificate against any tenant in whose case he is not satisfied from a register he will keep for these purposes showing the names and addresses, that this procedure has been followed. It will be the duty of the Certificate Officer to refuse to decree costs against the certificate-debtor in cases in which he is satisfied that the rent is in arrears because it was not demanded.

10. The requisition for certificates shall ordinarily be filed within the first three months of the agricultural year and shall include all the arrears claimed up to the end of the previous agricultural year which are not barred by limitation, provided that the requisitions filed at other times shall not be refused if the amount is about to be barred by limitation. Not more than one certificate shall be filed in respect of one tenancy within one agricultural year.

11. Only the rent entered in the maintained copy of the record of rights as legally payable can be recovered by the certificate procedure.

12. Only the persons who are recorded in the maintenance record as tenants will be accepted as certificate-debtors.

13. Only the cess legally recoverable under the Cess Act read with section 74 (2) of the Act shall be entered in the maintenance record and recovered by the certificate procedure.

14. Damages under section 68 of the Act shall not be included in certificates for arrears of rent.

15. Interest on arrears of rent at a higher rate than provided for in section 67 of the Act shall not be allowed.

16. The Collector or any other officer deputed by him for the purpose shall have power to inspect the accounts of collection and arrears maintained by the landlord and failure to produce them will entail the withdrawal of the certificate procedure.

17. The certificate procedure shall not be granted or shall be withdrawn if there are exceptional circumstances affecting the relationship of landlord and tenant which render it inadvisable to apply the certificate procedure or if the estate is not managed with due regard to the legal rights of the tenants, and in particular in the following matters:—

(*a*) no *abwab* or other illegal exaction under any denomination shall be realised by the landlord,

(*b*) the landlord shall not demand interest on arrears of rent at a higher rate than that provided for in section 67 of the Act,

(*c*) the landlord shall keep a full and correct account of all amounts paid by tenants,

(*d*) receipts shall be forthwith granted for any amount paid by the tenant,

(*e*) the Collector shall be satisfied that all arrears barred by limitation are properly dealt with.

Schedule A.

(Clause 9 of the terms and conditions.)

Post-card warning.

Take notice that you are liable to for the sum of Rs. on account of rent, cesses and interest as per details below :—

	Rs.		Rs.
Amount of rent annually payable ..		Amount of rent due	
Amount of cess annually payable ..		Amount of cess due	
		Interest due under section 67 of Bengal Tenancy Act ..	
		Year for which due	

If you do not pay this amount within seven days, a certificate will be made against you and the cost of executing the decree will be levied from you.

Certificate Officer.

Dacca.—No. 10882L.R.—29th August 1931. —Notification No. 786T.R., dated the 18th June 1930, under section 3 of the Bengal Survey Act, 1875 (Act V of 1875), published at pages 1170-75, Part I of the *Calcutta Gazette* of 31st July 1930, is hereby cancelled, so far as it relates to the survey of the lands comprised in temporarily-settled private estate "Diara Char Maijkhara" (serial No. 279) bearing tauzi No. 11154 of the Dacca Collectorate.

Dacca.—No. 10883L.R.—29th August 1931. —Notification No. 788T.R., dated the 18th June 1930, under section 101 (2) (*d*) of the Bengal Tenancy Act, 1885 (Act VIII of 1885), published at pages 1171-82, Part I of the *Calcutta Gazette* of 31st July 1930, is hereby cancelled, so far as it realtes to the survey and preparation of record-of-rights in respect of all lands which are comprised in temporarily-settled private estate "Diara Char Maijkhara" (serial No. 279) bearing tauzi No. 11154 of the Dacca Collectorate.

ERRATA.

Dacca.—No. 10884L.R.—29th August 1931. —In notification No. 786T.R., dated the 18th June 1930, under section 3 of the Bengal Survey Act, 1875 (Act V of 1875), published at pages 1170-75, Part I of the *Calcutta Gazette* of 31st July 1930, *read* "Tauzi No. 11019" in place of "Tauzi No. 11009" against estate "Diara Char Makimpur" (serial 77 of the list of temporarily-settled private estates) and *read* "Tauzi No. 10848" in place of "Tauzi No. 10448" against estate "Diara Mahal Tita Sonakanda" (serial No. 390 of the list temporarily-settled private estates).

Dacca.—No. 10885L.R.—29th August 1931.—In notification No. 788T.R., dated the 18th June 1930, under section 101 (*2*) (*d*) of the Bengal Tenancy Act, 1885 (Act VIII of 1885), published at pages 1177-82, Part I of the *Calcutta Gazette* of 31st July 1930, *read* "Tauzi No. 11019" in place of "Tauzi No. 11009" against estate "Diara Char Makimpur" (serial No. 77) and *read* "Tauzi No. 10848" in place of "Tauzi No. 10448" against estate "Diara Mahal Tita Sonakanda" (serial No. 390).

Land Acquisition.

NOTIFICATIONS.

Calcutta.—No. 10466L.A. — 24th August 1931.—The following agreement is published under section 42 of the Land Acquisition Act, I of 1894, for general information.

H. C. V. PHILPOT,
Secy. to the Govt. of Bengal.

MEMORANDUM OF AGREEMENT made this eighteenth day of May one thousand nine hundred and thirty one BETWEEN THE CALCUTTA CHRISTIAN SCHOOL SOCIETY, a company registered under the Societies Registration Act, XXI of 1860, and having its registered office in Ward No. X of the Calcutta Municipality in the city of Calcutta (hereinafter called "the Society") of the one part and THE SECRETARY OF STATE FOR INDIA IN COUNCIL (hereinafter called "the Secretary of State") of the other part.

WHEREAS for the purpose of the construction of outhouses and compound for the Calcutta Girls' High School the Society has applied to the Government of Bengal for the acquisition under the provisions of the Land Acquisition Act, 1894, of the piece or parcel of land containing Cipher decimal one eight one eight (:1818) of an acre or thereabouts situate in the City of Calcutta, being a portion of premises No. 118, Prinsep Street and more particularly described in the schedule hereto and delineated in the Plan* hereunto annexed and thereon coloured blue.

AND WHEREAS the said Government of Bengal, being satisfied by an enquiry held under section 40 of the said Act that the proposed acquisition is needed for the aforesaid purpose and that the said work is likely to prove useful to the public, has consented to acquire on behalf of the Society the piece or parcel of land hereinbefore described.

AND WHEREAS the said Government of Bengal has required the Society under the provisions of section 41 of the abovementioned Act to enter into the agreement with the Secretary of State hereinafter contained NOW THIS INDENTURE WITNESSETH that it is hereby agreed and declared as follows:—

1. On demand the Society shall and will pay to the said Government of Bengal all and every compensation in respect of the said land tendered, paid or awarded or to be tendered, paid or awarded by the Collector under the Land Acquisition Act, 1894, or by the Court to which a reference under Part III of the said Act may be made, or by the Court or Courts to which an appeal from the award of the said Court may be preferred and all costs, charges and expenses of the proceedings in the aforesaid Courts, or otherwise incidental to the proposed acquisition or payable in respect thereof under the provisions of the said Act.

2. On demand made by the said Collector the obligations of the Society under the last preceding clause not being thereby limited the Society shall and will deposit with the said Collector such sum or sums of money as in his discretion the said Collector may in anticipation estimate to be necessary for the purposes mentioned in the last preceding clause.

3. On payment by the Society of all demands under the foregoing first clause, or in the discretion of the said Government of Bengal (on deposit by the Society of all estimated amounts as provided in the second clause), but not before possession shall have been taken under the provisions of the abovementioned Act, the Secretary of State shall make over possession of the said land to the Society and shall execute and do all such acts and deeds as may be necessary and proper for effectually vesting the same in the Society.

4. The said land shall be held by the Society for the purposes of such work of the Calcutta Girls' High School as is hereinbefore mentioned and without the sanction in writing of the said Government of Bengal first had and obtained for no other purpose whatsoever.

5. The said work shall be completed (and fully equipped in all respects ready for use) within one year from the date on which possession of the said land shall have been given to the Society.

6. Should the said work not be completed (and fully equipped in all respects ready for use) within the period stated in the last preceding clause or within such further period as in its discretion may be prescribed or allowed by the said Government of Bengal or should the said land at any time thereafter cease for a period of twelve consecutive months to be held and used or cease to be required for the purpose or purposes provided for in the foregoing fourth clause then and in any such case, the said Government may summarily re-enter upon and take possession of the said land together with all buildings thereon, whether such buildings were erected before or after transfer of the land to the Society and thereupon the interest of the Society in the said land and buildings shall absolutely cease and determine.

7. On taking such possession the said Government may sell or otherwise deal with the said land and buildings as it may think proper.

(i) Should the said Government sell the land with the buildings the said Government after deducting the expenses incurred in connection with the said taking of possession and with such sale shall pay the proceeds to the Society.

(ii) Should the said Government decide not to sell the said land and buildings, the said Government shall retain the said land and buildings thereon in which case the Secretary of State shall repay to the Society the market

*Not printed herewith but may be inspected in the office of the First Land Acquisition Collector, at No. 5, Bankshall Street, Calcutta.

value as on the day of re-entry of all the buildings erected by the Society and all sums received from the Society in respect of all and every compensation as provided in the foregoing first clause (less the statutory allowance of fifteen per cent. and less any amount received on account of trees and buildings which are not in existence at the time of resumption), but will not repay any sums paid and received on account of costs, charges and expenses.

(iii) Should the said Government decide to sell the buildings only, upon such sale, the Secretary of State after deducting the expenses of taking possession and selling, pay the balance of the proceeds of sale to the Society, together with the sum received from the Society in respect of the compensation for the land (less the statutory allowance of fifteen per cent. and less any amount received from the Society on account of trees and buildings which are not in existence at the time of resumption), but will not repay any sum paid and received on account of costs charges and expenses.

8. The public shall be entitled to use the said work and the school subject to the rules of the Institution.

9. Should any dispute or difference arise touching or concerning the subject matter of this agreement or any covenant, clause or thing herein contained, the same shall be referred to the said Government of Bengal and the opinion and decision of the said Government upon such dispute or difference shall be final and conclusive and binding on the parties hereto.

The Schedule above referred to.

ALL THAT piece or parcel of land being a portion of premises No. 118, Prinsep Street, Calcutta, and measuring, more or less, 0·1818 of an acre, bounded on the North by Prinsep Street aforesaid, on the East by the premises No. 120, Prinsep Street and by premises No. 151, Dharmatolla Street, on the South by the premises No. 151, Dharmatolla Street and on the West by the remaining portion of the premises No. 118, Prinsep Street, being in Ward No. X of the Calcutta Municipality in the city of Calcutta and delineated on the Plan* hereto annexed and thereon coloured blue.

IN WITNESS whereof these presents have been executed the day and year first above written.

SIGNED, SEALED AND DELIVERED by the Reverend D. H. Manley, the Secretary of the Calcutta Christian School Society in the presence of—

C. C. Evennett, Assistant to Morgan & Co., Solicitors, Calcutta.

Seal.

D. H. Manley, Secretary of the Calcutta Christian School Society.

*Not printed herewith but may be inspected in the office of the First Land Acquisition Collector, at No. 5, Bankshall Street, Calcutta.

SIGNED, SEALED and DELIVERED by Secretary to the Government of Bengal in the Revenue Department on behalf of the Secretary of State for India in Council in the presence of—

J. N. Sircar, Assistant Secretary to the Government of Bengal, Revenue Department.

H. C. V. Philpot, Secretary to the Government of Bengal, Revenue Department.

Seal.

Government of Bengal, Revenue Department.

Hooghly. No 10802L.A.—29th August 1931.—Whereas it appears to the Governor in Council that land is likely to be required to be taken by Government at the expense of the district board of Hooghly for a public purpose, viz., for the construction of a road from Janai to Begumpur in the villages of Janai and Chikrand, jurisdiction list Nos. 87 and 110, respectively, thana Chanditola, parganas Balia and Dharsa, respectively, district Hooghly, it is hereby notified that for the above purpose a piece of land, starting from the eastern side of the Konnagar-Kristorampur Road towards the north-east and passing through villages Janai and Chikrand up to the East Indian Railway fencing of Begumpur Station, and measuring, more or less, 1·54 acres, is likely to be required within the aforesaid villages of Janai and Chikrand.

This notification is made, under the provisions of section 4, of Act I of 1894, to all whom it may concern.

A plan of the land may be inspected in the office of the Subdivisional Officer of Serampore.

In exercise of the powers conferred by the aforesaid section, the Governor in Council is pleased to authorise the officers for the time being engaged in the undertaking, with their servants and workmen, to enter upon and survey the land and do all other acts required or permitted by that section.

Any person interested in the above land, who has any objection to the acquisition thereof, may, within thirty days after the date on which public notice of the substance of this notification is given in the locality, file an objection in writing before the Collector of Hooghly.

Burdwan.—No. 10810L.A.—29th August 1931.—In exercise of the power conferred by section 48 (*1*) of the Land Acquisition Act I of 1894, the Governor in Council is pleased to withdraw from the acquisition of two pieces of land altogether measuring, more or less, 0·34 of an acre in the village of Malkuta, bounded as described below, out of 28·35 acres of land notified for acquisition under declaration No. 12971L.A., dated the 10th November 1930, published at page 1771, Part I, of the *Calcutta Gazette* of the 13th idem, for the construction of the distributary No. 1 in miles 12 to 16 and 17 of the Branch Canal in connection with the Damodar Canal Project,

in the villages of Jehara or Santoshpur and Bhagabanpur, pargana Burdwan, district Burdwan:—

Block A:

North, East and West—By the land of Fani Ghose.

South—By the land of Irrigation Department.

Block B:

North—By the land of Irrigation Department.

East, South and West—By the land of Satish Chandra Ghose.

Calcutta.—No. 10825L.A.—29th August 1931.—In exercise of the powers conferred by section 48 (*1*) of the Land Acquisition Act, I of 1894, the Governor in Council is pleased to withdraw from the acquisition of a piece of land measuring, more or less, 12 chittaks 30 square feet of standard measurement, equivalent to 0·0130 of an acre, being a portion of premises No. 22/1, Monoharpukur Road, and bounded as described below, which was included in the area notified for acquisition under declaration No. 8971L.A., dated the 28th July 1930, published at page 1186, Part I of the *Calcutta Gazette* of the 31st idem and required by the Calcutta Improvement Trust for Scheme No. XV-D (Lansdowne Road Extension) in Ward No. XXVII of the Calcutta Municipality:—

North—By the remaining portion of premises No. 22/1, Monoharpukur Road.

East—By premises Nos. 21/2 and 22, Monoharpukur Road.

South—By Monoharpukur Road.

West—By premises No. 21, Monoharpukur Road.

Hooghly.—No. 10828L.A.—29th August 1931.—The Governor in Council is pleased to cancel the notification No. 13377L.A., dated 15th November 1930, published under section 4 of the Land Acquisition Act, I of 1894, at pages 1816-17, Part I of the *Calcutta Gazette* of the 20th idem, in respect of the proposed acquisition of 0·369 of an acre of land required by the district board of Hooghly for widening the portion of Mayapur-Jagatpur Road in the 14th mile in the village of Madhya Arang, thana Khanakul, pargana Jahanabad, district Hooghly.

Khulna.—No. 10843L.A.—29th August 1931.—Whereas it appears to the Governor in Council that land is likely to be required to be taken by Government at the expense of the district board of Khulna for a public purpose, viz., for construction of a road from Gupia khal to the local board road via Kudirbat Tala, in the villages of Tilak and Kist-Tilak, jurisdiction list Nos. 35 and 34, respectively, thana Khulna, pargana Hogla, district Khulna, it is hereby notified that for the above purpose a piece of land comprising parts of cadastral plots Nos. 131, 132, 138, 139, 145, 146, 147, 173, 121, 169, 168, 1277, 1275 and 1278, and measuring, more or less, 2·22 acres is likely to be required within the aforesaid villages of Tilak and Kist-Tilak.

This notification is made, under the provisions of section 4, of Act I of 1894, to all whom it may concern.

A plan of the land may be inspected in the office of the Collector of Khulna.

In exercise of the powers conferred by the aforesaid section, the Governor in Council is pleased to authorise the officers for the time being engaged in the undertaking, with their servants and workmen, to enter upon and survey the land and do all other acts required or permitted by that section.

Any person interested in the above land, who has any objection to the acquisition thereof, may, within thirty days after the date on which public notice of the substance of this notification is given in the locality, file an objection in writing before the Collector of Khulna.

Khulna.—No. 10846L.A.—29th August 1931.—Whereas it appears to the Governor in Council that land is likely to be required to be taken by Government at the expense of the union board of Damodar for a public purpose, viz., for constructing a road from Damodar to the approach road to the Phultala Railway Station in the village of Damodar, jurisdiction list No. 18, thana Phultala, pargana Chengutia, district Khulna, it is hereby notified that for the above purpose a piece of land comprising parts of cadastral plots Nos. 2954, 2953, 2952, 2968, 2969, 2977, 2976, 2984, 3656, 3655 and 2985 and measuring, more or less, 0·26 of an acre, is likely to be required within the aforesaid village of Damodar.

This notification is made, under the provisions of section 4, of Act I of 1894, to all whom it may concern.

A plan of the land may be inspected in the office of the Collector of Khulna.

In exercise of the powers conferred by the aforesaid section, the Governor in Council is pleased to authorise the officers for the time being engaged in the undertaking, with their servants and workmen, to enter upon and survey the land and do all other acts required or permitted by that section.

Any person interested in the above land, who has any objection to the acquisition thereof, may, within thirty days after the date on which public notice of the substance of this notification is given in the locality, file an objection in writing before the Collector of Khulna.

Birbhum.—No. 10849L.A.—29th August 1931.—Whereas it appears to the Governor in Council that land is likely to be required to be taken by Government at the expense of the district board of Birbhum for a public purpose, viz., for erecting embankments on each bank of river Bakreswar in the 10th mile of Suri to Raniganj Road in the villages of Chinpai and Bandhersol, jurisdiction list Nos. 90 and 100, respectively, thana Dubrajpur; parganas Jainujal and Sahalampur, district Birbhum, it is hereby notified that for the above purpose two pieces of land comprising portions of cadastral plot No. 1056 of village Chinpai and portions of cadastral plot No. 1268 of village Bandhersol and altogether measuring, more or less, 0·28 of

an acre, is likely to be required within the aforesaid villages of Chinpai and Bandhersol.

This notification is made, under the provisions of section 4, of Act I of 1894, to all whom it may concern.

A plan of the land may be inspected in the office of the Collector of Birbhum.

In exercise of the powers conferred by the aforesaid section, the Governor in Council is pleased to authorise the officers for the time being engaged in the undertaking, with their servants and workmen, to enter upon and survey the land and do all other acts required or permitted by that section.

Any person interested in the above land, who has any objection to the acquisition thereof, may, within thirty days after the date on which public notice of the substance of this notification is given in the locality, file an objection in writing before the Collector of Birbhum.

Rajshahi.—No. 10935L.A.—31st August 1931.—Whereas it appears to the Governor in Council that land is likely to be required to be taken by Government at the expense of the district board of Rajshahi for a public purpose, viz., for the diversion of Nator Gurudaspur road in the villages of Makrampur and Parkholabaria, parganas Sujanagar and Bhaturia Tappe Chapila, zilla Rajshahi, it is hereby notified that for the above purpose a piece of land, comprising cadastral plots Nos. 520 and 537 and parts of cadastral plots Nos. 3, 4, 10, 11, 12, 13, 14, 15, 501, 19, 23, 25, 26, 313, 334, 335, 496, 339, 340, 347, 348, 349, 351, 352, 353, 354, 362, 363, 373, 374, 375, 376, 377, 378, and 338 of the settlement map of mauza Makrampur and cadastral plots Nos. 2, 10, 11, 36, 1048 and 1049 and parts of cadastral plots Nos. 3, 9, 12, 21, 22, 23, 24, 26, 27, 29, 30, 32, 35, 53, 50, 25, and 31 of the settlement map of mauza Parkholabaria, and measuring, more or less, 5·462 acres, is likely to be required within the aforesaid villages of Makrampur and Parkholabaria.

This notification is made, under the provisions of section 4 of Act I of 1894, to all whom it may concern.

A plan of the land may be inspected in the office of the Subdivisional Officer of Nator.

In exercise of the powers conferred by the aforesaid section, the Governor in Council is pleased to authorise the officers for the time being engaged in the undertaking, with their servants and workmen, to enter upon and survey the land and do all other acts required or permitted by that section.

Any person interested in the above land, who has any objection to the acquisition thereof, may, within thirty days after the date on which public notice of the substance of this notification is given in the locality, file an objection in writing before the Collector of Rajshahi.

Faridpur.—No. 10938L.A.—31st August 1931.—Whereas it appears to the Governor in Council that additional land is likely to be required to be taken by Government at the public expense for a public purpose, viz., for cross dam in connection with the construction of lock and sluice at Rajair khal, in the village of Rajair, jurisdiction list No. 63, thana Rajair, pargana Fatejangapur, zilla Faridpur, it is hereby notified that for the above purpose a piece of land comprising portion of cadastral survey plot No. 1307, measuring, more or less, ·0062 of an acre, is likely to be required within the aforesaid village of Rajair.

This notification is made, under the provisions of section 4 of Act I of 1894, to all whom it may concern.

A plan of the land may be inspected in the office of the Subdivisional Officer of Madaripur.

In exercise of the powers conferred by the aforesaid section, the Governor in Council is pleased to authorise the officers for the time being engaged in the undertaking, with their servants and workmen, to enter upon and survey the land and do all other acts required or permitted by that section.

Any person interested in the above land, who has any objection to the acquisition thereof, may, within thirty days after the date on which public notice of the substance of this notification is given in the locality, file an objection in writing before the Collector of Faridpur.

24-Parganas.—No. 10944L.A.—31st August 1931.—The Governor in Council is pleased to cancel so much of the notification No. 19128L.A., dated the 17th October 1930, under section 4 of the Land Acquisition Act, I of 1894, published at pages 1686-87, Part I of the *Calcutta Gazette* of the 30th idem, as relates to the acquisition of ·0719 of an acre of land (comprising cadastral survey plots Nos. 825, 828 and 696 in mauza Sangrampur, jurisdiction list No. 104, thana Basirhat) out of the total area of 3·4438 acres required by the district board, 24-Parganas, for the improvement of Gobra Road, 1st and 2nd miles, in the villages of Sangrampur (jurisdiction list 104), Par-Naihati (jurisdiction list 105), Biramnagar (jurisdiction list 108), Chak Kamardanga (jurisdiction list 109), Chaura (jurisdiction list 107), in thana Basirhat, and in the village of Gandarbapur (jurisdiction list 93), thana Baduria, parganas Balia, Buran and Hilki, district 24-Parganas.

Burdwan.—No. 10991L.A.—31st August 1931.—Whereas it appears to the Governor in Council that land is likely to be required to be taken by Government at the public expense for a public purpose, viz., for constructing the road approach at chainage 5,434 feet of distributary No. 6A of the main canal, Damodar Canal Project, in the village of Royun, jurisdiction list No. 49, thana Burdwan, pargana Burdwan, district Burdwan, it is hereby notified that for the above purpose two pieces of land altogether measuring, more or less, 0·19 of an acre, bounded on the—

Block A:

North—By the lands of Panchu Bala Debi and Banka Behari Karfa,

East—By the lands of Banka Behari Karfa and Paresh Chandra Choudhury and others,

South—By the lands declared to be acquired for distributary No. 6A of the main canal, Damodar Canal Project,

West—By the lands of Panchu Bala Debi and Manager, Burdwan Raj Ward's Estate,

Block B:

North—By the lands declared to be acquired for distributary No. 6A of the main canal, Damodar Canal Project,

East—By the lands of Dharmadas Mandal and others,

South—By the lands of Dharmadas Mandal and others and Manager, Burdwan Raj Ward's Estate,

West—By the lands of Manager, Burdwan Raj Ward's Estate,

are likely to be required within the aforesaid village of Royan.

This notification is made, under the provisions of section 4 of Act I of 1894, to all whom it may concern.

A plan of the land may be inspected in the office of the Special Land Acquisition Deputy Collector, Burdwan, as well as in that of the Executive Engineer, Damodar Canal Division, Burdwan.

In exercise of the powers conferred by the aforesaid section, the Governor in Council is pleased to authorise the officers for the time being engaged in the undertaking, with their servants and workmen, to enter upon and survey the land and do all other acts required or permitted by that section.

In exercise of the powers conferred by section 17 (*4*) of the Land Acquisition Act, I of 1894, as amended by Act XXXVIII of 1923, the Governor in Council is pleased to direct that the provisions of section 5A of the Act shall not apply in this case.

ERRATA.

Hooghly.—No. 10837L.A.—29th August 1931.—In lines 7, 8 and 17 of notification No. 9169L.A., dated the 31st July 1930, under section 4 of Land Acquisition Act, published at pages 1214-15, Part I of the *Calcutta Gazette* of the 7th August 1930, in respect of the proposed acquisition of land required by the Hooghly district board for the construction of a village road from Kasimgar to Sultangachi in the district of Hooghly, *for* the words "Kasimgar and Sultangachi" *read* "Ekbalpur."

Noakhali.—No. 10986L.A.—31st August 1931.—In notification No. 3997L.A., dated the 25th February 1929, under section 4 of the Land Acquisition Act, published at pages 407-08, Part I of the *Calcutta Gazette* of the 28th idem, in respect of the proposed acquisition of 0·70 of an acre of land required by the Central Co-operative Bank, Ltd., and the Arban Co-operative Society, Ltd., of Sandip for the construction of their office buildings in the village of Harishpur, thana Sandip, district Noakhali, *delete* the words "and the Urban Co-operative Society, Limited" in line 4 of the notification after the words "the Central Co-operative Bank, Ltd."

DECLARATIONS.

Rangpur.—No. 10805L.A.—29th August 1931.—Whereas it appears to the Governor in Council that land is required to be taken by Government at the public expense for a public purpose, viz., for restoration of district board road at Fulchari, in the villages of Galna and Baraikandi, jurisdiction list Nos. 409 and 411 in thana Fulchari, pargana Patiladaha, district Rangpur, it is hereby declared that for the above purpose a piece of land measuring, more or less, 0·564 of an acre, bounded on the—

Mile Nos. 233-234.

North—By the lands in mile No. 235 (Hela Shek).

East—By the land of Tanu Shek, Surendra Chandra Chakravarti, Sudhanshu Sarkar, Shyam Nath, union board road, Sudhanshu Sarkar, Syam Nath, Mofizuddin Mandal and Hela Shek.

South—By the land of Tanu Shek and district board road.

West—By the lands of Eastern Bengal Railway and district board road.

Mile Nos. 234-235:

North—By the lands of Khijmat and district board road.

East—By the lands of Hela, Saritulla and Khijmat.

South—By the lands in mile No. 234 (Hela Shek).

West—By the lands of Eastern Bengal Railway and district board road.

is required within the aforesaid villages of Galna and Baraikandi.

Mines of coal, iron-stone, slate or other minerals lying under the land or any particular portion of the land, except only such parts of the mines and minerals as it may be necessary to dig, or carry away, or use, in the construction of the work for the purpose of which the land is being acquired are not needed.

This declaration is made, under the provisions of section 6, Act I of 1894, and section 3, clause (*l*), Act XVIII of 1885, to all whom it may concern.

A plan of the land may be inspected in the office of the Collector of Rangpur.

Burdwan.—No. 10813L.A.—29th August 1931.—Whereas it appears to the Governor in Council that land is required to be taken by Government at the public expense for a public purpose, viz., for constructing 1st and 2nd miles of distributary No. 6C, Main Canal, Damodar Canal Project, in the villages of Bhita, Jamra or Jamar, Kadgachi, Jagannathpur or Jamalpur, Srikrishnapur or Shahapur and Chandutia, jurisdiction list Nos. 53, 69, 68, 67, 55 and 66, respectively, in thana Burdwan, pargana Shahabad, district Burdwan, it is hereby declared that for the above purpose four pieces of land altogether measuring, more or less, 6·815 acres, starting from chainage 37,260 feet of the distributary No. 6, Main Canal, Damodar Canal Project,

and generally proceeding towards the south-east up to chainage 75 feet, again commencing from chainage 415 feet of the proposed distributary in mauza Bhita and proceeding towards the same direction up to chainage 5,940 feet and again from chainage 6,210 feet to chainage 6,765 feet and then again from chainage 7,012 feet to chainage 8,000 feet, passing through mauzas Bhita, Jamra or Jamar, Kadgachi, Jagannathpur or Jamalpur and Srikrishnapur or Shahapur and then again from chinage 8,000 feet towards the east through mauzas Srikrishnapur or Shahapur and Chandutia and terminating at chainage 10,560 feet in mauza Chandutia and varying in width from 25 feet to 150 feet and being 9,658 feet in length, are required within the aforesaid villages of Bhita, Jamra or Jamar, Kadgachi, Jagannathpur or Jamalpur, Srikrishnapur or Shahapur and Chandutia.

This declaration is made, under the provisions of section 6, Act I of 1894, to all whom it may concern.

A plan of the land may be inspected in the office of the Special Land Acquisition Deputy Collector, Burdwan, as well as in that of the Executive Engineer, Damodar Canal Division, Burdwan.

Burdwan.—No. 10816L.A.—29th August 1931.—Whereas it appears to the Governor in Council that land is required to be taken by Government at the public expense for a public purpose, viz., for constructing distributary No. 1F of distributary No. 1E, Branch Canal, Damodar Canal Project, in the villages of Gopalpur, Jehara, Nunari, Parihat and Mahachanda, jurisdiction list Nos. 98, 100, 55, 54 and 109, respectively, in thanas Burdwan and Bhatar, pargana Burdwan, district Burdwan, it is hereby declared that for the above purpose a piece of land, measuring, more or less, 11·15 acres, commencing at chainage 0 which is the central point of the distributary No. 1E at chainage 6,300 feet, Branch Canal, and proceeding generally towards the north up to chainage 4,007 feet, then turning towards the east and proceeding up to chainage 7,300 feet, then from chainage 7,465 feet and proceeding up to chainage 9,020 feet, then from chainage 9,220 feet and proceeding up to chainage 12,165 feet, and then again from chainage 12,260 feet and proceeding up to chainage 15,449 feet in the same direction running through mauzas Gopalpur, Jehara, Nunari, Parihat and Mahachanda, varying in width from 5 feet to 140 feet and being 14,964 feet in length, is required within the aforesaid villages of Gopalpur, Jehara, Nunari, Parihat and Mahachanda.

This declaration is made, under the provisions of section 6, Act I of 1894, to all whom it may concern.

A plan of the land may be inspected in the office of the Special Land Acquisition Officer, Burdwan, as well as in that of the Executive Engineer, Damodar Canal Division, Burdwan.

Burdwan.—No. 10819L.A. — 29th August 1931.—Whereas it appears to the Governor in Council that land is required to be taken by Government at the public expense for a public purpose, viz., for constructing 1st, 2nd, 3rd and 4th miles up to chainage 2,596 feet of distributary No. 1D of distributary No. 1, Branch Canal, Damodar Canal Project, in the village of Satinandi, jurisdiction list No. 174 in than Galsi, and in the villages of Talit, Bhagabanpur, or Bagur and Amar, jurisdiction list Nos. 91, 101 and 25, respectively, in thana Burdwan, pargana Burdwan, district Burdwan, it is hereby declared that for the above purpose three pieces of land starting from chainage 46,337 feet of distributary No. 1, Branch Canal of the Damodar Canal Project in mauza Satinandi and running generally towards the south up to chainage 1,774 feet; then proceeding towards the south-east up to chainage 10,757 feet through mauzas Satinandi and Talit; then again commencing from chainage 10,907 feet and running towards the same direction up to chainage 11,862 feet; then again commencing from chainage 12,017 feet and running towards the same direction through mauzas Talit, Bhagabanpur or Bagur and terminating at chainage 18,436 feet in mauza Amar, varying in width from 15 feet to 275 feet and being 18,101 feet in length, and altogether measuring, more or less, 14·22 acres, are required within the aforesaid villages of Satinandi, Talit, Bhagabanpur or Bagur, and Amar.

This declaration is made, under the provisions of section 6, Act I of 1894, to all whom it may concern.

A plan of the land may be inspected in the office of the Special Land Acquisition Deputy Collector, Burdwan, as well as in that of the Executive Engineer, Damodar Canal Division, Burdwan.

Burdwan.—No. 10822L.A. — 29th August 1931.—Whereas it appears to the Governor in Council that land is required to be taken by Government at the public expense for a public purpose, viz., for constructing distributary No. 1E of distributary No. 1, Branch Canal, Damodar Canal Project, in the villages of Jehara, Gopalpur and Simdali, jurisdiction list Nos. 100, 98 and 102, respectively, of thana Burdwan, and in the village of Mahachanda, jurisdiction list No. 109 in thana Bhatar, pargana Burdwan, district Burdwan, it is hereby declared that for the above purpose a strip of land commencing at chainage 0 which is the central point of the distributary No. 1 at chainage 57,109 feet of the Branch Canal and proceeding generally towards the north up to chainage 1,100 feet; then turning towards the north-east and proceeding generally through mauza Jehara up to chainage 4,543 feet, then turning again towards the east through mauzas Jehara, Gopalpur, Simdali and Mahachanda, terminating at chainage 21,143 feet in mauza Mahachanda, varying in width from 12½ feet to 241 feet and being 21,110½ feet in length, and measuring, more or less, 18·71 acres, is required within the aforesaid villages of Jehara, Gopalpur, Simdali and Mahachanda.

This declaration is made, under the provisions of section 6, Act I of 1894, to all whom it may concern.

A plan of the land may be inspected in the office of the Special Land Acquisition Officer, Burdwan, as well as in that of the Executive Engineer, Damodar Canal Division, Burdwan.

Bakarganj.—No. 10831L.A. —29th August 1931.—Whereas it appears to the Governor in Council, that land is required to be taken by Government at the expense of the district board, Bakarganj, for a public purpose, viz., for a road from Kaunia to Deuli in the villages of Kaunia, Kalagachhia, Baidyapasha, Chhoto Baidyapasha and Deuli, parganas Buzrugumedpur and Krishnadebpur, zilla Bakarganj, it is hereby declared that for the above purpose pieces of land measuring, more or less, 6·75 acres and comprising portions of cadastral survey plots as follows:—

(1) portions of cadastral survey plots Nos. 1254-1257, 1262, 1319, 1324, 1325, 1333, 1335, 1337, 1379, 1905, 1915, 1919, 1920, 1922-1929, 1261/2211, 1904/2220, 1905/2221, in the village of Kaunia, revenue survey No. 3336,

(2) portions of cadastral survey plots Nos. 482, 485, 486, 488, 491, 492, 504-507, 735, 824-827, 831-833 and 835-837 in the village of Kalagachhia, revenue survey No. 2770,

(3) portions of cadastral survey plots Nos. 1, 3-6, 16-18, 20-24, 27, 28, 67, 68, 79 and 80 in the village of Baidyapasha, revenue survey No. 3333,

(4) portions of cadastral survey plots Nos. 59 and 64 in the village of Chhota Baidyapasha, revenue survey No. 3334.

(5) portions of cadastral survey plots Nos. 738, 744, 746, 748, 752, 758, 762, 763, 766, 767, 770, 772, 778, 780, 783, 784, 787, 790, 802, 806, 811-813, 821, 823, 824, 830, 854, 858, 859, 863, 864, 1151, 1152, 1158, 1180-1182, 1184 and 1188, in the village of Deuli, revenue survey No. 2771,

are required within the aforesaid villages of Kaunia, Kalagachhia, Baidyapasha, Chhoto Baidyapasha and Deuli.

This declaration is made, under the provisions of scetion 6, Act I of 1894, to all whom it may concern.

A plan of the land may be inspected in the office of the Collector of Bakarganj.

Hooghly.—No. 10834L.A. — 29th August 1931.—Whereas it appears to the Governor in Council that land is required to be taken by Government at the expense of the district board of Hooghly, for a public expense, viz., for construction of a village road from Kasimgar to Sultangachi, in the village of Ekbalpur, jurisdiction list No. 59 in thana Polba, pargana Paunan, district Hooghly, it is hereby declared that for the above purpose a piece of land measuring, more or less, 1·176 acres, and bounded on the—

North—By lands of Hari Mazumdar and others, Panchu Naru and others, Sidhu Muchi, Tarak Ghosh and others, Harendra Nath Bose and others, Manmotha Ghosh, Ramangini Debi, Hridoy Ghosh, Bidhubhusan Ghosh, Sarojini Dassi, Arjun Bauri, Giridhari Lal Mukherji and others, Bhupati Bauri,

East—By local board road,

South—By lands of Bidhubhusan Ghosh, Tarak Ghosh and others, Bhupati Bauri, Giridhari Lal Mukherji and others, Arjun Bauri, Sarojini Dassi, Harendra Nath Bose and others, Ramagini Debi, Monmotha Ghosh, Sidhu Muchi, Panchu Naru and others, Hari Mazumdar and others,

West—By lands of Rai Bijoy Narayan Kundu Bahadur,

is required within the aforesaid village of Ekbalpur.

This declaration is made, under the provisions of section 6, Act I of 1894, to all whom it may concern.

A plan of the land may be inspected in the office of the Land Acquisition Officer, Hooghly.

Chittagong.—No. 10840L.A.— 29th August 1931.—Whereas it appears to the Governor in Council that the second additional land is required to be taken by Government at the public expense for a public purpose, viz., for the establishment of a landing ground in the village of Patenga in thana Double Moorings, district Chittagong, it is hereby declared that for the above purpose a piece of land comprising parts of cadastral plots Nos. 11579 and 11688, and measuring, more or less, 1·15 acres, is required within the aforesaid village of Patenga.

This declaration is made, under the provisions of section 6, Act I of 1894, to all whom it may concern.

A plan of the land may be inspected in the office of the Collector of Chittagong.

Dacca. — No. 10852L.A. — 29th August 1931.—Whereas it appears to the Governor in Council that land is required to be taken by Government at the public expense for a public purpose, viz., for a telegraph mast at Gauribardia, in the village of Gauribardia, pargana Patpashar, zilla Dacca, it is hereby declared that for the above purpose a piece of land measuring, more or less, 0·04 of an acre, comprising parts of cadastral survey plots Nos. 2438 and 2439, is required within the aforesaid village of Gauribardia.

This declaration is made, under the provisions of section 6, Act I of 1894, to all whom it may concern.

A plan of the land may be inspected in the office of the Collector of Dacca.

Howrah.—No. 10932L.A.—31st August 1931.—Whereas it appears to the Governor in Council that land is required to be taken by Government at the public expense for a public purpose, viz., for the south approach road to Bally Bridge, in the village of Bally, jurisdiction list No. 1, thana Bally, pargana Boro, zilla Howrah, it is hereby declared that for the above purpose a piece of land measuring, more or less ·0878 of an acre, bounded on the—

North—By the lands of Binode Behari Mukherjee, Kunja Mala, Khirode Hati,

East—By Panchanan temple and lands of Benode Behari Mukherjee, Gopal Paramanik, Kali Mala, Bipin Mala, Jnanada Mala and others,

South—By New Grand Trunk Road and Panchanantola Road,

West—By the lands of E. I. Railway and by New Grand Trunk Road,

is required within the aforesaid village of Bally.

This declaration is made, under the provisions of section 6 of Act I of 1894, to all whom it may concern.

A plan of the land may be inspected in the office of the Engineer-in-chief, Calcutta Chord Railway at Dakhineswar, as well as in that of the Special Land Acquisition Officer at Alipore, 24-Parganas.

24-Parganas.—No. 10941L.A.—31st August 1931.—Whereas it appears to the Governor in Council that land is required to be taken by Government at the expense of the district board, 24-Parganas, for a public purpose, viz., for the improvement of Gobra Road 1st and 2nd mile, in the village of Sangrampur (jurisdiction list No. 104), Par-Naihati (jurisdiction list No. 105), Biramnagar (jurisdiction list 108), Chak Kamardanga (jurisdiction list 109) and Chaura (jurisdiction list 107) in thana Basirhat, and in the village of Gandarbapur, jurisdiction list 93, thana Baduria, parganas Balia, Buran and Hilki, zilla 24-Parganas, it is hereby declared that for the above purpose nine pieces of land altogether measuring, more or less, 3·3719 acres, comprising portions of cadastral plots Nos. 11, 12, 168 to 170, 234, 236, 237, 238, 297 to 300, 315, 317 to 320, 335, 336, 339 to 341, 400, 405 to 408, 410, 588 to 596, 623, 624, 635 to 638, 687 to 692, 698, 824 and 827 of village Sangrampur, portions of cadastral plots Nos. 376, 377, 379, 380, 382, 383, 384, 398, 400 and 414 of village Par-Naihati, portions of cadastral plots Nos. 405 to 407 of village Chak Kamardanga, portions of cadastral plots Nos. 1 to 3, 5, 122, 123, 463 to 465, 467, 704, 709, 711, 712, 716 to 721, 682, 683, 687, 809, 819, 820, 839, 862, 866 and 867 of village Biramnagar, portions of cadastral plots Nos. 206 to 208 of village Choura and portions of cadastral plots Nos. 3678, 3683 to 3687, 3689, 3690 and 4137 of village Gandarbapur, are required within the aforesaid villages of Sangrampur, Par-Naihati, Biramnagar, Chak Kamardanga, Choura and Gandarbapur.

This declaration is made, under the provisions of section 6 of Act I of 1894, to all whom it may concern.

A plan of the land may be inspected in the office of the District Engineer, 24-Parganas, as well as in that of the Special Land Acquisition Officer at Alipore, 24-Parganas.

Forests.

NOTIFICATION.

No. 10947For.—31st August 1931.—In exercise of the powers conferred by clause (*i*) of section 26 and clause (*j*) of section 32 of the Indian Forest Act, 1927 (XVI of 1927), the Governor in Council is pleased to make the following amendment in the rules on the reverse of permit forms appended to the rules regulating hunting, shooting and fishing within the reserved and protected forests in Bengal, published with the Bengal Government notification No. 839For., dated the 23rd January 1915:—

After rule VII on the reverse of permit form A and rule 9 on the reverse of permit form B the following rule shall be added:—

"The shooting of any game other than carnivorous animals by the aid of artificial lights including the head lights of motor cars, or *from machans* between the hours of sunset and sunrise is prohibited."

Jurisdiction.

NOTIFICATION.

Tippera. — No. 10888Jur. — 29th August 1931. — In exercise of the power conferred by sub-section (*1*) of section 8 of the Code of Criminal Procedure, 1898 (Act V of 1898), and in supersession of all previous notifications on the subject relating to the area included within the Chandpur subdivision of the Tippera district and to the boundaries of that area, the Governor in Council is pelased to declare that the limits of that subdivision shall include the local areas of the following police-stations:—

Hajiganj police-station—Notification No. 4754P., dated the 12th May 1914.

Kachua police-station—Notification No. 4755P., dated the 12th May 1914.

Chandpur police-station—Notifications No. 11662P., dated the 30th November 1914, No. 1725P.J., dated the 20th May 1919, No. 5123Pl., dated the 18th October 1927, and No. 3672Pl., dated the 22nd August 1931.

Faridganj police-station—Notification No. 11663P., dated the 30th November 1914.

Matlabbazar police-station—Notification No. 5609P., dated the 10th April 1916.

Miscellaneous.

NOTIFICATION.

No. 10881Misc.—29th August 1931.—The following candidates have passed the Revenue Agents Examination held in August 1931:—

Burdwan Division.

Birbhum.

(1) Lakshmi Narayan Ghosh.
(2) Dhirendra Nath Chatterji.
(3) Panchanan Mukherji.
(4) Biswanath Mukherji.

Midnapore.

(1) Haripado Choudhury.

Hooghly.

(1) Monmotha Nath Ghosh.
(2) Bholanath Ghosh.
(3) Bepin Behari Das.

Presidency Division.

24-Parganas.

(1) Prafulla Kumar Das.
(2) Amullya Chandra Kanjabilla.

Nadia.

(1) Gangesh Chandra Dass.
(2) Kalipada Mitra.

Jessore.

(1) Priyanath Biswas.

Dacca Division.

Dacca.

(1) Nalini Kumar Datta
(2) Ramani Kanta Pal.
(3) Sheikh Syed Ali.
(4) Braja Ballav Basak.
(5) Lal Mohan Das.

Mymensingh.

(1) Upendra Chandra Roy.
(2) Ramani Kanta De.
(3) Abdul Latif.
(4) Phani Bhusan De.

Faridpur.

(1) Probodh Chandra Sen.
(2) Benoy Kanta Roy.

Chittagong Division.

Chittagong

(1) Ramani Binode Chakraborty.
(2) Ahamad Hossain.

Tippera.

(1) Rebati Mohan Saha.

Noakhali.

(1) Habibar Rahaman.

Rajshahi Division.

Dinajpur.

(1) Manoranjan Mitra.

Pabna.

(1) Ram Lal Pramanik.
(2) Kazemuddin Ahmed.
(3) Banamali Sen.

H. C. V. PHILPOT,
Secy. to the Govt. of Bengal.

IRRIGATION DEPARTMENT.

Irrigation.

NOTIFICATION.

No. 17I.—24th August 1931.—In exercise of the power conferred by section 21 of the Bengal Embankment Act, 1882 (Bengal Act II of 1882), the Governor in Council is pleased to appoint the following gentlemen to be members of the Standing Embankment Committee for the district of Hooghly:—

Rai Satish Chandra Mukherji Bahadur, B.L., Hooghly, *vice* Rai Mahendra Chandra Mitra Bahadur, C.I.E., deceased.

Babu Monindra Mohan Mukherji, B.L., Uttarpara, *vice* Babu Sib Krishna Ray Chowdhury, deceased.

Babu Nitya Nanda Singh Ray, Chakdighi, *vice* Rai Lalit Mohan Singh Bahadur, deceased.

Babu Dasharathi Chatterji, Chief Manager, Tagore Estate, Pathuriaghata, Calcutta, *vice* Mr. C. J. Mackey, who has left the country.

Khan Sahib Muhammad Abdulla Chowdhury of Pandua.

Maulvi A. Razek of Bujruk, Gangarambali, police-station Tarakeswar.

Babu Sidheswar Banerji, the present Manager of the estate of late Raja Jyot Kumar Mukherji of Uttarpara, *vice* the late Manager Babu Ranjit Kumar Banerji.

The Executive Engineer, Damodar Division, *vice* the Executive Engineer, Northern Drainage and Embankment Division.

H. C. V. PHILPOT,
Secy. to the Govt. of Bengal.

Orders by the Conservator of Forests, Southern Circle, Bengal.

Dacca-Mymensingh.—No. 4604For. — 28th August 1931.—Rai Mohim Chandra Choudhuri Bahadur, Extra Assistant Conservator of Forests, Dacca-Mymensingh Division, is granted leave on average pay for fourteen days, with effect from the 1st October 1931, under rule 81 (*b*) (*ii*) of the Fundamental and Subsidiary Rules.

He is permitted to affix the Durga and Lakshmi Puja holidays to the leave.

J. H. LYALL,
Conservator of Forests,
Southern Circle, Bengal (offg.).

TREASURY NOTICE.

Orders by the Deputy Accountant-General, Bengal.

The Treasury, 22nd August 1931.

It is notified that the refund order book No. 73 bearing the numbers 1 to 50 (both inclusive) is in use by the Income-Tax Office, Railway and Miscellaneous Circle, Calcutta, with effect from 20th August 1931.

Colour of the voucher "Pink."

K. R. RAMA AYYAR,
Dy. Accountant-General, Bengal.

SHERIFF'S OFFICE, THE 27TH AUGUST 1931.

Notice is hereby given that the Fifth Criminal Sessions of the year 1931 of the High Court of Judicature at Fort William in Bengal for the town of Calcutta and Factory of Fort William and the places subordinate thereto, will be held at the Court House, in the town of Calcutta, on Monday, the 7th day of December next, at 11 o'clock in the forenoon, and thenceforward from day to day until the said sessions be over. And it is hereby proclaimed that all persons who are to prosecute any of the prisoners to be brought up for trial at the said sessions be present then and there to prosecute.

P. N. TAGORE, *Sheriff.*

সরিফ আফিস, সন ১৯৩১ সাল, তারিখ ২৭শে আগষ্ট।

সকলকে সমাচার দেওয়া যাইতেছে যে সুবে বাঙ্গালার ফোর্ট উইলিয়ম দুর্গের অধীন সহর কলিকাতার ও অন্যান্য স্থানের ফৌজদারী বিচার নিষ্পত্তি জন্য আগামী সন ১৯৩১ সালের ৭ই ডিসেম্বর, সোমবার বেলা ১১ ঘটিকার সময় এবং যে পর্য্যন্ত সেশিয়ানের কার্য্য শেষ না হয় প্রতিদিন উক্ত সময়ে কলিকাতার হাইকোর্টের আপন আদালত ঘরে সন ১৯৩১ সালের পঞ্চম ক্রিমিনেল সেশিয়ান বসিবেক এবং এতদ্বারা প্রচার করা যাইতেছে যে, যে সকল ব্যক্তি কোন কয়েদির বিরুদ্ধে ফৌজদারী মিছিল করিবেক তাহারা উক্ত স্থানে উক্ত সময়ে হাজির থাকিয়া মোকদ্দমা করে, ইতি।

পি, এন, ঠাকুর,
সরিফ।

HIGH COURT NOTICES.

Civil.

The 24th August 1931.

No. 11430A.—Maulvi Muhammad Sader Hossain, munsif, under orders of transfer to Nawabganj, in the districts of Rajshahi and Malda, is vested with the powers of a Judge of a Court of Small Causes for the trial of suits cognizable by such a Court up to the value of Rs. 50 within the local limits of the Nawabganj munsifi.

No. 11431A.—Maulvi Muhammad Sirajul Islam, munsif, under orders of transfer to Sudharam, in the district of Noakhali, is vested with the powers of a Judge of a Court of Small Causes for the trial of suits cognizable by such a Court up to the value of Rs. 50 within the local limits of the Sudharam munsifi.

The 29th August 1931.

No. 11814A.—Babu Santosh Kumar Mitra, munsif of Narayanganj, in the district of Dacca, is vested with the powers of a Judge of a Court of Small Causes for the trial of suits cognizable by such a Court up to the value of Rs. 250 within the local limits of the Narayanganj munsifi.

No. 11817A.—Babu Santosh Kumar Mitra, munsif of Narayanganj, in the district of Dacca, is vested under section 19, sub-section (2) of the Bengal, Agra and Assam Civil Courts Act, 1887 (XII of 1887), as amended by the Decentralization Act, 1914 (IV of 1914), with powers to try, under the ordinary procedure, original suits up to the value of Rs. 2,000 arising within the local limits of Narayanganj munsifi.

By order of the High Court,
W. McC. SHARPE, *Registrar.*

ORDERS BY COMMISSIONERS OF DIVISIONS.

Burdwan Division—Chinsura.

No. 2529J.G.—21st August 1931.—Babu Shyamapada Bhattacharjee, Sub-Deputy Collector and Circle Officer, Khatra, Bankura, is allowed leave on average pay from the 12th to the 14th October 1931 (inclusive), under Rule 81 (*b*) (*ii*) of the Fundamental Rules.

No. 2534J.G.—21st August 1931.—Babu Nagendra Nath Das, Sub-Deputy Collector and Circle Officer, Gangajalghati, Bankura, is allowed leave on average pay from the 16th September 1931 to the 14th October 1931 (inclusive), under rule 81 (*b*) (*ii*) of the Fundamental Rules.

No. 2560J.G.—23rd August 1931.—Babu Rakhohari Chatterji, Sub-Deputy Collector and Sub-Deputy Magistrate, Contai, Midnapore, is allowed leave on average pay from the 27th October to the 6th December 1931 (inclusive), under rule 81 (*b*) (*ii*) of the Fundamental Rules.

No. 2564J.G.—23rd August 1931.—Maulvi Abu Ahmed Faizal Mohi, Sub-Deputy Collector and Sub-Deputy Magistrate, Bankura, is appointed Circle Officer, Gangajalghati, in the Sadar subdivision of the same district, *vice* Babu Nagendra Nath Das, granted leave.

No. 2541J.G.—24th August 1931. — In accordance with the provisions of rule 691A of Chapter XVIIA, Volume I of the Bengal Jail Code, I hereby appoint Maulvi Muhammad Fazlar Rahman to be honorary teacher in the Burdwan Jail in the district of Burdwan, *vice* Maulvi Abdul Mannan, for a period of two years with effect from the date of this notification.

2. As Maulvi Abdul Mannan failed to impart moral instruction since his appointment, the unexpired portion of his office as an honorary teacher as notified in this office notification No. 1633J.G. of the 21st May 1930, is hereby cancelled.

No. 1725L.S.-G.—24th August 1931.—It is hereby notified for general information that, under rule 20 (*b*) of the rules for the management of charitable hospitals and dispensaries in Bengal, the following gentlemen have been appointed to be members of the committee for the management of the charitable dispensary at Basna in the district of Hooghly:—

The Subdivisional Officer, Sadar.
Babu Ashu Tosh Banerjee.
Babu Purna Chandra Chatterjee.
Dr. Bankim Chandra Chatterjee.
Babu Jitendra Nath Sinha Roy.
Dr. Janaki Kanta Ghose.
Maulvi Golam Rahaman.
Babu Girindra Nath Bhattacharja.
Babu Surendra Nath Mukherjee.
Babu Surendra Nath Banerjee.
Babu Beni Madhab Chowdhury.

No. 1728L.S.-G.—24th August 1931.—It is hereby notified for general information that, under rule 20 (*b*) of the rules for the management of charitable hospitals and dispensaries in Bengal, the following gentlemen have been appointed to be members of the committee for the management of the charitable dispensary at Bakulia in the district of Hooghly:—

The Subdivisional Officer, Sadar.
Babu Dhirendra Nath Mukherjee.
The President, Bakulia union board.
Babu Lalit Kumar Banerjee, Pleader.
Babu Surendra Nath Banerjee.
Dr. Benode Behari Mukherjee.
Babu Kalipada Mondal.

No. 1731L.S.-G.—24th August 1931.—It is hereby notified for general information that, under rule 20 (*b*) of the rules for the management of charitable hospitals and dispensaries in Bengal, the following gentlemen have been appointed to be members of the committee for the management of the charitable dispensary at Kumrul in the district of Hooghly:—

The Subdivisional Officer, Sadar.
Babu Loke Nath Mukherjee.
Babu Monohar De.
Babu Gobinda Chandra Kundoo.
Babu Lalit Mohan Pal.
Babu Chandi Charan Mallik.
Babu Rakhal Raj Sinha Ray.
The President, Gopinathpur union board.

No. 1734L.S.-G.—24th August 1931.—It is notified for general information that, under rule 20 (*b*) of the rules for the management of charitable hospitals and dispensaries in Bengal, the following gentlemen have been appointed to be members of the committee for the management of the charitable dispensary at Babnan in the district of Hooghly:—

The Subdivisional Officer, Sadar.
The President, Babnan union board.
Munshi Zias Nabi.
Babu Gosta Behari De.
M. Mukshed Ali Mondal.
M. Abdul Khaleque.
Babu Rakhal Chandra Guha.
Babu Keshab Chandra Sur, M.A.
Babu Narendra Nath Sen, B.L.

No. 1737L.S.-G.—24th August 1931.—It is hereby notified for general information that, under rule 20 (*b*) of the rules for the management of charitable hospitals and dispensaries in Bengal, the following gentlemen have been appointed to be members of the committee for the management of the charitale dispensary at Bhandarhati in the district of Hooghly:—

Babu Kali Krishna Banerjee.
Babu Atul Chandra Chowdhury.
Dr. Nalin Chowdhury, M.B.
Captain Sanat Chandra Mukherjee, M.B.
Munshi Abdul Gani Sarkar.
The Head Master, Bhandarhati High English School.
The Subdivisional Officer, Sadar.

No. 1740L.S.-G.—24th August 1931.—It is hereby notified for general information that, under rule 20 (*b*) of the rules for the management of charitable hospitals and dispensaries in Bengal, the following gentlemen have been appointed to be members of the committee for the management of the charitable dispensary at Dasghara in the district of Hooghly:—

The Subdivisional Officer, Sadar.
Babu Keshab Chandra Roy.
The Head Master, Dasghara High English School.
The President, Parambua union board.
Babu Nirmal Chandra Biswas.
Syed Salauddin.
Babu Nirode Baran Roy.
The President, Dasghara union board.

No. 1743L.S.-G.—24th August 1931.—It is hereby notified for general information that, under rule 20 (*b*) of the rules for the management of charitable hospitals and dispensaries in Bengal, the following gentlemen have been appointed to be members of the committee for the management of the charitable dispensary at Mondlai in the district of Hooghly:—

The Subdivisional Officer, Sadar.
Babu Bankim Chandra Chatterjee.
Babu Jagadish Prosad Bose, B.L.
The President, Jamgram union board.
The President, Ilsoba union board.
Babu Ekkari Mukherjee.
Babu Dwijendra Nath Banerjee.
Babu Bhujanga Bhusan Ghose.
Babu Jyoti Prosad Chowdhuri.
Babu Narendra Nath Banerjee.
Babu Prokash Chandra Mukherjee.
Khan Sahib Chowdhury Mahammad Abdulla.

No. 1746L.S.-G.—24th August 1931.—It is hereby notified for general information that, under rule 20 (*b*) of the rules for the management of charitable hospitals and dispensaries in Bengal, the following gentlemen have been appointed to be members of the committee for the management of the charitable dispensary at Bilsora in the district of Hooghly:—

The Subdivisional Officer, Sadar.
The President, Boinchee union board.
Babu Dharani Dhar Ghose.
Babu Bhut Nath Ghose.
Babu Jogendra Nath Kumar.
Babu Upendra Nath Ghose.
Maulvi Abdul Sovan.
Babu Surendra Nath Sinha, B.L.

No. 1749L.S.-G.—24th August 1931.—It is hereby notified for general information that, under rule 20 (*b*) of the rules for the management of charitable hospitals and dispensaries in Bengal, the following gentlemen have been appointed to be members of the committee for the management of the charitable dispensary at Tentulia in the district of Hooghly:—

Babu Rakhal Das Sarkar.
Babu Hari Das Mustafi.
Babu Kshetra Das Chatterjee.
Babu Baman Das Bhattacharya.
Babu Kalipado De.
The Subdivisional Officer, Sadar.
Golam Rahaman.

No. 1203M.—26th August 1931.—It is hereby notified for general information that, under rule 20 (*b*) of the rules for the management of charitable hospitals and dispensaries in Bengal, the following gentlemen have been appointed to be members of the committee for the management of the Raj Kissen Charitable Dispensary at Bhadreswar in the district of Hooghly in addition to those appointed in notification No. 889M. of the 25th June 1931:—

Babu Hridoy Chandra Banarji.
Dr. Akshoy Kumar Mukherjee.

No. 1796L.S.-G.—27th August 1931.—It is hereby notified for general information that, under section 6, clause (*f*) of the Bengal Ferries Act, I of 1885, and in exercise of the powers delegated to Commissioners of Divisions under Bengal Government notification No. 3403L.S.-G., dated the 1st December 1904, I have sanctioned the discontinuance of the Rajarhat ferry over the Banspati khal in the district of Howrah.

L. B. BURROWS, *Commissioner (offg.)*.

Burdwan, the 22nd August 1931.

It is hereby notified for general information that, under sub-section 4 of section 6 of the Village Self-Government Act, 1919 (Bengal Act V of 1919), read with rule 35 of the rules for the election and appointment of members of union boards, etc., Babu Jajneswar Ghosal has been appointed to be a member for Ward No. II of the Purbasthali union board in police-station Purbasthali in the Kalna subdivision in the district of Burdwan, *vice* Maulvi Golam Hossain, resigned.

H. C. BOSE, *District Magistrate (offg.)*.

Suri, the 29th August 1931.

No. 10L.S.-G.—It is hereby notified for general information that, under section 13 of the Bengal Village Self-Government Act, 1919 (Bengal Act V of 1919), read with rule 35 of the rules for the election and appointment of members of union boards, etc., Babu Umapati Ghatak has been duly elected to be a member for Ward No. II of the Paikor union board in police-station Muraroi in the Rampurhat subdivision of the district of Birbhum, *vice* Shaik Jelani, deceased.

G. S. DUTT, *District Magistrate*.

Chittagong Division—Chittagong.

No. 3275G.—27th August 1931.—Maulvi Muhammad Jasimuddin, probationary Sub-Deputy Collector, Tippera, is allowed leave on average pay for thirteen days, under rule 81 (*b*) (*ii*) of the Fundamental Rules, with effect from the 17th August 1931.

W. H. NELSON, *Commissioner*.

Dacca Division—Dacca.

No. 4296J.—22nd August 1931.—Babu Prahlad Chandra Gope, Sub-Deputy Collector, Dacca, is transferred temporarily to Manikganj subdivision of that district.

A. CASSELLS, *Commissioner (offg.)*.

Mymensingh, the 26th August 1931.

No. 677C.—It is hereby notified for general information that—

(*a*) Under sub-section (*2*) of section 6 of the Bengal Village Self-Government Act, 1919 (Bengal Act V of 1919), the following gentlemen have been duly elected to be members of the undermentioned union boards in police-stations noted above them in the Mymensingh Sadar South subdivision of the Mymensingh district:—

Police-station Trisal.

I—Dhanikhola union board.

Muhammad Hussainali.
Muhammad Jobedali Sarkar.
Muhammad Somsher Ali Khan.
Muhammad Sabedali Mandal.
Jaharali Sarkar.
Abdul Hoque Mondal.

II—Bailar union board.

Muhammad Sirajuddin Sarkar.
Muhammadali Tarafdar.
Muhammad Hussainulla Sarkar.
Muhammad Imanulla Shahityaratna.
Muhammad Imam Baksha Sarkar.
Muhammad Tamizuddin Sarkar.

III—Kathal union board.

Maulvi Asanulla Tarafdar.
Maulvi Abdus Samad.
Abdul Hamid Sarkar.
Altaf Ali Sarkar.
Intaz Ali Sarkar.
Muhammad Rajab Ali Sarkar.

IV—Kanihari union board.

Babu Hem Chandra Roy.
Babu Sarat Chandra Roy.
Maulvi Muhammad Abdur Rahman Fakir.
Babu Jamini Kishore Mazoomdar.
Maulvi Abdul Guffur Khan.
Maulvi Mohammad Ali Mandal.

V—Rampur union board.

Muhammad Hushen Tarafdar.
Muhammad Meher Ali Mean.
Muhammad Bechu Sarkar.
Muhammad Umedali Mian.
Muhammad Abdul Waheb Mian.
Muhammad Kadir Sarkar.

VI—Trisal union board.

Razab Ali Sarkar.
Arfanali Sarkar.
Muhammad Hatim Ali.
Hossain Ali Sarkar.
Arfanali Mandal.
Babujan Sarkar.

VII—Shakua union board.

Daulat Khan.
Syedali Mir.
Kamaruzzaman Sheikh.
Maulvi Muhammad Taheruddin.
Umed Ali Kari.
Abdus Subhan Biswas.

VIII—Balipara union board.

Babu Jnaneswar Chakravarty.
Babu Nalini Kanta Chakravarty.
Abdur Rahaman Mian.
Babu Abinash Chandra Bhowmik.
Abdul Hekim.
Abdul Gani.

Police-station Muktagacha.

I—Dulla union board.

Muchu Shaikh.
Hamidar Rahman Meah.
Chengu Munshi.
Jogendra Chandra Das.
Meherulla Sarker.
Surendra Chandra Acherji.

II—Mankon union board.

Munshi Mashaluddin Sarkar.
Naibuddin Sarkar.
Naimuddin Sarkar.
Khandkar Abdul Gaffur.
Jaladhar De.
Maulvi Anisuddin Khankar.

III—Tarati union board.

Sahed Ali Master.
Abbas Ali Sarkar.
Abdul Ahad Sarkar.
Abdul Latif Doctor.
Kamini Kumar Biswas.
Radha Nath Pal.

IV—Kumargata union board.

Adhar Chandra Das.
Haradeb Das.
Aktarali Sarkar.
Muhammad Gomiruddin Sarkar.
Abdur Rasid Sarkar.
Afez Ali Sarkar.

V—Bashati union board.

Fakir Ahamad Khan.
Lalit Chandra Neogi.
Naimuddin Shaikh.
Jahiruddin Ahamad.
Rajani Kanta Dutt.
Tamizaddin Meah.

VI—Chapuria union board.

Umesh Chandra Chakravarty.
Intaz Ali Bepari.
Rajabali Sarkar.
Jagat Chandra Chakravarty.
Bepin Chandra Chakravarty.
Arshon Sarkar.

VII—Ghoga union board.

Dwaraka Nath Hore.
Kailash Chandra De.
Purna Chandra Roy, son of Kashi Nath Roy.
Purna Chandra Roy, son of Tarak Nath Roy.
Amiruddin Khan.
Abhoy Chandra De.

VIII—Daugaon union board.

Meherali Munshi.
Mohamadali Sarkar.
Mohesh Chandra Hangsha.
Munshi Muhammad Fazlul Karim Khan.
Sachindra Chandra Das.
Umesh Chandra Das.

IX—Kashimpur union board.

Intajuddin Talukdar.
Manikuddin Talukdar.
Ainuddin Ahmed.
Maulvi Safi Uddin.
Krishna Chandra Acharji.
Mohamed Ali Sarkar.

X—Kheruajani union board.

Lalit Mohan Chanda.
Har Kishore Dutt.
Jagat Kishore Chanda.
Golam Uddin Khan.
Shamsuddin Sarkar.
Ahmadali Muster.

Phulbaria police-station.

II—Putijana union board.

Mir Ear Mahmud.
Babu Hem Chandra Bhattacharjee.
Babu Amulya Chandra De.
Babu Khitish Chandra Ganguly.
Babu Ashutosh Roy.
Babu Girish Chandra Roy.

III—Kushmail union board.

Jabarali Sarkar.
Jatindra Chandra Bhattacherji.
Ichab Sarkar.
Abbas Ali Tarafdar.
Abdul Gaffor Munshi.
Amiruddin Farazi.

IV—Balian union board.

Maulvi Atas Ali Mir.
Hossain Ali Mozumdar.
Rajabuli Doctor.
Maulvi Hoytulla Master.
Babu Parbati Sankar Ghose.
Maulvi Entaj Ali Khan.

V—Phulbaria union board.

Faijuddin Munshi.
Muhammad Sahed Ali Chaudhury.
Benode Kishore Sarkar.
Ismail Sarkar.
Hussain Ali Sarkar.
Ibadulla Faraji.

X—Radhakanai union board.

Maulvi Aktaruddin Sarkar.
Maulvi Achimuddin Sarkar.
Maminuddin Maulvi.
Babu Shudhansu Chandra Kaviraj.
Maulvi Amulla Munshi.
Maulvi Reazuddin Tarafdar.

(*b*) Under sub-section (*3*) of section 6 of the Bengal Village Self-Government Act, 1919 (Bengal Act V of 1919), the following gentlemen have been appointed by the District Magistrate of Mymensingh to be members of

the undermentioned union boards in police-stations noted above them in the Sadar South subdivision of the Mymensingh district:—

Trisal police-station.

I—Dhanikhola union board.

Brindaban Chandra Biswas.
Mohamad Osmanali.
Jabadali Master.

II—Bailar union board.

Mohamad Arfanali Sarkar.
Maulvi Emdadali.
Susi Charan Sarkar.

III—Kathal union board.

Rajani Kanta Sarma.
Jahuruddin Sarkar.
Kailash Chandra De.

IV—Kanihari union board.

Babu Profulla Kumar Chakravarty, B.L.
Sanu Mandal.
Munshi Mohamad Ashekali Sarkar.

V—Rampur union board.

Mohamad Taripulla Sarkar.
Mohesh Chandra Sarkar.
Mohamad Meherali Sarkar.

VI—Trisal union board.

Munshi Mahamad Hassenali.
Ram Chandra Roy.
Joy Chand Gop.

VII—Shakua union board.

Abdul Hamid Fakir.
Mohim Chandra Mitra.
Mohesh Chandra Das.

VIII—Balipara union board.

Muhamad Kumedali Mandal.
Ekinali Shah Khandkar.
Rajani Bhusan Dutt.

Muktagacha police-station.

I—Dulla union board.

Abdul Aziz Sarkar.
Ainulla Sarkar.
Dhirendra Nath Chakravarty.

II—Mankon union board.

Dhirendra Kumar Roy.
Moshen Ali Master.
Bisweswar Chakravarty.

III—Tarati union board.

Muhammad Abdul Hamid Sarkar.
Durga Charan Ghosh.
Govinda Chandra Sen.

IV—Kumargata union board.

Surendra Chandra Biswas.
Kashi Kanta Sen.
Mainuddin Sarkar.

V—Bashati union board.

Maulvi Farman Ali Master.
Bidhubhusan Chakravarty.
Satish Chandra Agradani.

VI—Chapuria union board.

Sayed Mahmed Ali Meah.
Suresh Chandra Biswas.
Maulvi Said Ali Sarkar.

VII—Ghoga union board.

Amiruddin Talukdar.
Jaripuddin Sarkar.
Pacha Mandal.

VIII—Daogaon union board.

Maulvi Tamizuddin.
Abdul Samad Mia.
Jahiruddin Munshi.

IX—Kashimpur union board.

Kishori Mohan Biswas.
Sabu Sarkar.
Digindra Nath Chakravarty.

X—Kheruajani union board

Tamizuddin Ahamad.
Maniruddin Sarkar.
Rup Chand Sarkar.

Phulbaria police-station.

II—Putijana union board.

Raj Mamud Sarkar.
Ramjan Ali Sarkar.
Nazir Sarkar.

III—Kushmail union board.

Makim Ali Khan.
Hriday Charan Sil.
Krisna Charan Pal.

IV—Balian union board.

Wahed Ali Fakir.
Raj Kishore Das.
Muhammad Jabanali Master.

V—Phulbaria union board.

Abdul Rahaman Sarkar.
Ram Kanai Sarkar, Doctor.
Faijuddin Master.

X—Radhakanai union board.

Jaikumar Barnasarma.
Goyanath Sarkar.
Rajabali Sarkar.

H. GRAHAM, *District Magistrate.*

Presidency Division—Calcutta.

No. 1570M.—24th August 1931.—It is hereby notified for general information that in connection with the general election of Commissioners of the Khardah Municipality in the district of the 24-Parganas fixed for the 11th July 1931, the following gentlemen have been declared elected to be Commissioners of the Municipality under rule 19 of the Bengal Municipal Election Rules:—

Ward No. I (Rahara).

Dr. Surendra Kumar Banerjee, L.M.S.
Babu Sushil Kumar Banerjee.

Ward No. II (Khardah).

Babu Charu Chandra Sen.

Ward No. III (Rashkhola).

Babu Sudhir Kissore Goswami, B.A.

Ward No. IV (Kulinpara).

Babu Makhanlal Mukherji.
Babu Hiranmoy Mukherji.

No. 1583M.—25th August 1931.—It is hereby notified for general information that the following gentlemen have been duly elected to be Commissioners of the Birnagar Municipality in the district of Nadia at the last general election of Commissioners held on the 25th July 1931:—

Ward No. I.

Babu Krishnasekhar Bose.
Babu Ashutosh Bhattacharji.
Babu Haridas Sarbajna.

Ward No. II.

Babu Anukul Chandra Mukerji.
Babu Sukumar Mukerji.

Ward No. III.

Babu Nirode Kumar Mukerji.
Babu Anukul Prosad Mukerji.

Ward No. IV.

Babu Harendra Nath Mukerji.

No. 2172L.S.G.—25th August 1931.—It is hereby notified for general information that, under rule 23 of the dispensary rules, the Sub-Inspector of Police, Tehatta, has been appointed to be an *ex-officio* member of the committee for the management of the Tehatta dispensary in the Meherpur subdivision of the district of Nadia, in place of Maulvi Nurul Hossain, transferred.

Erratum.—No. 1588M.—26th August 1931.—In this office notification No. 1498M., dated the 12th August 1931, published at page 990 of Part I of the *Calcutta Gazette* of the 20th August 1931, publishing the names of the elected Commissioners of the Rajpur Municipality in the district of the 24-Parganas—

for

Ward No. IV.

Babu Rajani Kanto Chatarji.
Babu Sita Prosad Ray Chaudhuri.
Babu Chuni Lal De.

read

Ward No. IV.

Babu Rajani Kanto Chatarji.

Ward No. V.

Babu Sita Prosad Ray Chaudhuri.
Babu Chuni Lal De.

No. 1468R.G.—28th August 1931.—Babu Pyari Mohan Mukherjee, Sub-Deputy Collector, Sadar, 24-Parganas, is transferred to Bagerhat, Khulna, as Circle Officer.

No. 1474R.G.—28th August 1931.—Babu Kalipada Nayak, Sub-Deputy Collector and Circle Officer, Bagerhat, Khulna, is transferred to the Satkhira subdivision of that district as Circle Officer.

F. W. ROBERTSON, *Commissioner (offg.)*.

Alipore, the 25th August 1931.

It is hereby notified for general information that, under rule 32 of the election rules made under section 138 (*a*) of the Bengal Self-Government Act (B.C. Act III of 1885) as amended by B.C. Act V of 1919, the 22nd September 1931 is fixed for holding the election of two members of the Basirhat local board in Hasnabad thana of the Basirhat subdivision in the district of 24-Parganas.

J. D. V. HODGE, *District Magistrate*.

Alipore, the 27th August 1931.

It is hereby notified for general information that Babus Sarat Chandra Dalui in place of Kanai Lal Mukhapadya and Ambika Charan Mandal in place of Rupchand Mandal and Akshay Kumar Naskar in place of Makhan Lal Dhali have been appointed by the District Magistrate, 24-Parganas, under section 13 of the Bengal Village Self-Government Act, 1919 (Bengal Act V of 1919), read with rule 36 of the rules for the election and appointment of members, etc., of union boards, and section 6 (*4*) of the Bengal Village Self-Government Act, respectively, to be members of the Bamanghata union board in the Sadar subdivision of the 24-Parganas district.

K. L. MUKHERJEE, *Addl. District Magistrate*.

Rajshahi Division—Jalpaiguri.

No. 3266J.—24th August 1931.—It is hereby notified for general information that, under rule 20 (*b*) of the manual of rules for the management of hospitals and dispensaries under the supervision of the Government of Bengal, the following gentlemen are appointed to be members of the committee for the management of the charitable dispensary at Ullapara in the district of Pabna:—

The Subdivisional Officer, Serajganj (*ex-officio*).
The Circle Officer, Ullapara (*ex-officio*).
The Sub-Registrar, Ullapara (*ex-officio*).
The Officer-in-charge, Ullapara police-station (*ex-officio*).
The Sub-Inspector of Schools, Ullapara (*ex-officio*).
The Head Master, Ullapara Madrassa (*ex-officio*).
Babu Debendra Nath Saha.
Maulvi Safiuddin Mia.
Maulvi Mahiuddin Khan.
Babu Jogesh Chandra Roy.
Babu Digendra Nath Dey.

No. 3308J.—26th August 1931.—Babu Monoranjan Das Gupta, Sub-Deputy Collector, Bogra, is transferred to the Balurghat subdivision of the Dinajpur district to work in the general line.

No. 3333J. — 28th August 1931. — Mr Norman Bose, Sub-Deputy Collector, Rajshahi Division, is posted temporarily to the headquarters station of the Darjeeling district to work in the general line.

No. 3338J.—28th August 1931.—Babu Phanindra Mohan Datta, Sub-Deputy Collector, Malda, is allowed leave on average pay for twelve days, under rule 81 (*b*) (*n*) of the Fundamental Rules, with effect from the 3rd October 1931.

No 3357J.—28th August 1931.—Maulvi Fazlal Karim, No. II, Sub-Deputy Collector, Bogra, is transferred to the Naogaon subdivision of the Rajshahi district to work as Circle Officer.

J. G. DRUMMOND, *Commissioner (offg.)*.

Rajshahi, the 24th August 1931.

It is hereby notified for general information that, under sub-section (2) of section 6 of the Bengal Village Self-Government Act, 1919 (Bengal Act V of 1919), the following gentlemen have been elected to be members of the undermentioned union board in police-station Godagari in the Sadar subdivision of the district of Rajshahi.

Police-station Godagari.

Gogram union board.

Ward No. II.

Munshi Muhammad Fasiulla Sarkar.
Munshi Muhammad Jamiruddin Mondal.

L. G. PINNELL, *District Magistrate*.

Jalpaiguri, the 28th August 1931.

It is hereby notified for general information that, under section 13 of the Bengal Village Self-Government Act, 1919 (Act V of 1919), Babu Kandura Roy has been duly elected to be a member of the Majhipara union board in police-station Tetulya in the Sadar subdivision of the district of Jalpaiguri, in place of Munshi Jitoo Mohammed, deceased.

R. L. WALKER, *Deputy Commissioner*.

The Calcutta Gazette

THURSDAY, SEPTEMBER 3, 1931.

Part I A

Orders and Notifications by the Government of India republished for general information.

HOME DEPARTMENT.

NOTIFICATION.

JUDICIAL.

Simla, the 19th August 1931.

No. F. 717/31.—The Hon'ble Mr. Justice P. L. Buckland, Kt., Barrister-at-Law, a Judge of the High Court of Judicature at Fort William in Bengal, is granted leave from the 21st August to the 10th September 1931, both days inclusive, the first fifteen days on full allowance and the remainder on half allowance.

S. N. ROY,
Joint Secy. to the Govt. of India (offg.).

FINANCE DEPARTMENT.

NOTIFICATION.

Simla, the 15th August 1931.

No. F.-12 (24)-R. I./31.—The following Resolution by the Secretary of State in Council is published for general information:—

In exercise of the powers conferred by sub-section (*2*) of section 96-B of the Government of India Act, the Secretary of State with the concurrence of the majority of votes at a meeting of the Council of India held this 21st day of July 1931, hereby makes the following amendments in the Fundamental Rules, namely:—

1. In clause (*b*) of rule 81 of the said rules, in the proviso to sub-clause (*ii*), for the words "India or Ceylon" the words "India, Ceylon or Nepal" shall be substituted.

2. In Note 1 to rule 90 of the said rules, after the word "Ceylon" where it occurs for the first time, the words "or Nepal" shall be inserted, and the words "and in the case of Government servants of the Indo-European Telegraph Department, when leave is taken or extended outside India and Persia elsewhere than in Ceylon" shall be omitted.

H. DENNING,
Secy. to the Govt. of India.

DEPARTMENT OF COMMERCE.

NOTIFICATION.

MERCHANT SHIPPING.

Simla, the 22nd August 1931.

No. 5-M. II (2)/31.—In exercise of the powers conferred by sub-section (*1*) of sections 72 and 81, respectively, of the Indian

Merchant Shipping Act, 1923 (XXI of 1923), and in supersession of all previous orders on the subject, the Governor General in Council is pleased to authorise the officers specified in the second column of the annexed Schedule to sue for and recover the wages and expenses, referred to in sections 72 and 80 of the said Act, at the ports specified in the corresponding entry in the first column thereof:—

Schedule.

Ports.	Officers.
* *	* *
Calcutta ..	1. Shipping Master, Calcutta. 2. Deputy Shipping Master, Calcutta.
* *	* *
Chittagong ..	Nautical Surveyor, Chittagong.
* *	* *

A. RAISMAN,
Joint Secy. to the Govt. of India (offg.).

ARMY DEPARTMENT.

Simla, the 22nd August 1931.

Part B.

No. 514.—The undermentioned officers resign their commissions:—

AUXILIARY FORCE, INDIA.

Northern Bengal Mounted Rifles.

Lt. P. V. Osborne. Dated 6th July 1931.

* * * * *

G. M. YOUNG,
Secy. to the Govt. of India.

Non-collegiate student (University Law College).

60 Chattopadhyay, Biswanath.

University Law College.

Chattopadhyay, Kanailal.
" Mohitkumar.
" Nirmalchandra.
" Sankariprasad.
" Satkari.

Non-collegiate student (University Law College).

Chattopadhyay, Susilkumar.

University Law College.

Chattopadhyay, Tarakpada.
Chattoraj, Biprendrakumar.
Chaudhuri, Durgapada.

Ripon Law College.

70 Chaudhuri, Girijasankar.

University Law College.

Chaudhuri, Iswarprasad.
" Kesabchandra.
" Praphullakumar.
" Rabindranath.
" Rai Saurindranath.
" Sachindralal.
" Sarbananda.
" Satyendranath.
" Sripati.
80 " Subodhnarayan.
Das, Dhirendralal.
" Ganeschandra.

Ripon Law College.

Das, Harischandra.

Earle Law College, Gauhati.

Das, Hridayananda.

University Law College.

Das, Jyotsnamohan.
" Makhanlal.
Dasgupta, Bijalikumar.
" Binodkumar.
" Birendranath.

Non-collegiate student (Ripon Law College).

90 Dasgupta, Lakshmikanta.

University Law College.

Dasgupta, Saileschandra.
" Santoshkumar.
" Sisirkumar.
Daspattanayak, Satischandra.
Datta, Ajitkumar.
" Arun.
" Satyabrata.

Non-collegiate student (University Law College).

Datta, Sudhirgopal.

University Law College.

Datta, Sukumar.

Non-collegiate student (Roll Cal. Comb. N. 1).

100 Dawson, Bhagyasundari.

Ripon Law College.

De, Jatischandra.
" Panchkari.

Non-collegiate student (University Law College).

De, Pramathanath.
Deb, Binaykrishna.

Ripon Law College.

Dhar, Debendranath.

University Law College.

Dhar, Harendrabhushan.

Ripon Law College.

Dhol, Manidranath.

Non-collegiate student (Ripon Law College).

Gangopadhyay, Amritalal.

University Law College.

Gangopadhyay, Hirendrakumar.
110 Ghosh, Dhirendranath.

Non-collegiate student (University Law College).

Ghosh, Jitendrakrishna.

Ripon Law College.

Ghosh, Kalidas.

University Law College.

Ghosh, Nirmalchandra.
" Nripendramohan.
" Parbatiprasanna.
" Prankrishna.
" Rameschandra.
" Santoshkumar.
" Satyapriya.
120 " Tarapada, I.

Ripon Law College.

Ghoshal, Prangopal.

University Law College.

Ghoshal, Sisirkumar.
Golam Maula Chaudhury.

Earle Law College, Gauhati.

Goswami, Rebatinath.

Ripon Law College.

Gupta, Radhakanta.

University Law College.

Gupta, Sukumar.

Earle Law College, Gauhati.

Hajarika, Krishnadatta.

University Law College.

Haldar, Binodbihari.
Jana, Girischandra.

Ripon Law College.

130 Kabir Ahmad.

University Law College.

Kalowar, Jnanlal.

Ripon Law College.

Kazi Ali Ahmed.

University Law College.

Khondaker Mohammad Hasan.

Non-collegiate student (University Law College).

K. R. Rama Iyer.

University Law College.

Laha, Anantacharan.
" Dhirendranath.
" Gaurbinod.
Lahiri, Chandrasekhar.
" Dineschandra.
" Hemendrachandra.
" Sachindranath.
Lat, Kanhaiyalal.
Maiti, Bhupendranath.

Non-collegiate student (University Law College).

Maitra, Jitendranath.
" Ranajitkumar.

University Law College.

Majumdar, Asutosh.
" Dhirendralal.
" Dhirendranath.

Ripon Law College.

Majumdar, Manindramohan.

University Law College.

Majumdar, Muktiranjan.
Mallik, Amritalal.

Ripon Law College.

Mansur Mandal.
Md. Attar Hossain.
Md. Rahimuddin Akanda.

University Law College.

Md. Serajul Haque.
Misra, Gurudatta.
Mitra, Dhirendrakumar.

Non-collegiate student (University Law College).

Mitra, Gobindachandra.

University Law College.

Mitra, Krishnakumar.
" Naliniranjan.
" Naroschandra.
" Prabhatkumar.
" Pramathanath.
" Satkari.
" Susilkumar.
M. N. Doraswami Iyer.

Ripon Law College.

Mohammed Abdur Rahman.

University Law College.

Moosajee Solaiman Salehjee.
M. P. Gopalmenon.
Mukhopadhyay, Amarendrakumar.
" Bibhutibhushan.
" Bimalacharan.
" Dayamay.

Ripon Law College.

Mukhopadhyay, Debadideb.

University Law College.

Mukhopadhyay, Gokulchandra.
" Jnanabrata.
" Maheswar.
" Manilal.
" Paritoshkumar.

Ripon Law College.

Mukhopadhyay, Rammohan.

University Law College.

Mukhopadhyay, Sadhankrishna.
" Sambhunath.
" Sanatkumar.
Mukhoti, Jitendranath.
Mustaphi, Phanindranath.
Nag, Jitendrakumar.
Nandi, Manindrakrishna.
Niyogi, Kaliprasad.
Pal, Bhabatosh.
" Brajendranarayan.
" Hemendrachandra.
" Jnanendranath.
" Surendrakumar.
Param Sukh Chaudhuri.

Earle Law College, Gauhati.

Pathak, Madanmohan.

Ripon Law College.

Patnaik, Praphullakumar.

Non-collegiate student (University Law College).

Poddar, Goshthabihari.

University Law College.

Poddar, Madangopal.

Non-collegiate student (University Law College).

Pramanik, Kisorilal.

University Law College.

Purkait, Bibhutibhushan.
Purkayastha, Nagendranath.
Quazi Hokmatuddin Ahmed.

Earle Law College, Gauhati.

Rajmedhi, Surendranath.

Ripon Law College.

Ray, Abinaschandra.

University Law College.

Ray, Anilkumar.
" Dhirendranath, I.
" Harigopal.
" Mihirbijay.
" Niharbindu.
" Rakhaldas.

Non-collegiate student (University Law College).

Ray, Sudhindranath.

University Law College.

Ray, Sudhirchandra, II.
" Sudhirkumar, II.
" Sukhendubikas.
Ramgopal Bhowsinhka.
Raychaudhuri, Bhupendranarayan.
" Bimalchandra.
" Narendranath.
" Rabindramohan.
Sabdar Ali Biswas.

Ripon Law College.

Sadat Ali Akanda.

University Law College.

Saha, Girindranath.
„ Jitendramohan.
„ Sriskumar.

Earle Law College, Gauhati.

Saharia, Dinanath.

University Law College.

Samajpati, Kiranchandra.
Samanta, Pyarimohan.
Sanyal, Bhupendranath.
Sarkar, Giridhar.
230 „ Hirendranath.
„ Kumarendranath.
„ Mahendrakisor.
„ Payaskanti.
„ Prangobinda.
„ Sudhansusekhar.

Earle Law College, Gauhati.

Sarma, Kalindranath.
„ Krishnakanta.
„ Padmakanta.

University Law College.

Sasaru, Tarapada.
240 Sen, Ajitkumar.
„ Anilchandra.

Ripon Law College.

Sen, Anilendrachandra.

University Law College.

Sen, Bibhutibhushan.
„ Praphullakumar.
Sengupta, Binaykumar.
„ Nalindramohan.
„ Ramanath.
„ Ranajitkumar.

Ripon Law College.

Sengupta, Sukumar.

University Law College.

250 Sengupta, Susilkumar.

Ripon Law College.

Sil, Bijaykrishna.
Sinha, Radhabinod.

University Law College.

Sinha, Rupnarayan.

Non-collegiate student (University Law College).

Sinha, Sachchidananda.

University Law College.

Sinharay, Gangadhar.
Som, Gopalchandra.
„ Nikhilprakas.

Ripon Law College.

Syed Karimazzaman.

University Law College.

Syed Mahbub Murshed.

Ripon Law College.

260 Syed Mubarik.

University Law College.

Syed Sarafat Ali.

Non-collegiate student (University Law College).

262 Tilak Shamshere Thapa Kshatry.

Senate House, the 3rd September 1931.

I. The undermentioned candidates are declared to have passed the B. E. (Civil) Examination (Professional Section) held in July 1931 :—

Bengal Engineering College, Sibpur.

SECOND DIVISION.

(In order of merit.)

1 Md. Abdul Jabber.
2 Eadon, Clarence Patrick.
3 Kanjilal, Sarojkumar.
4 Bandyopadhyay, Jaminikumar.
5 Maitra, Susilchandra.
6 Barat, Satyendrakumar.
7 Basu, Bibhutibhushan.
8 Das, Nirmalkumar.
9 Raychaudhuri, Sisirkumar.
10 Mukhopadhyay, Sachindranath.
11 Chattpadhyay, Paresnath.
12 Sarkar, Asutosh.
13 Basu, Kamakhyanath.
14 Mitra, Ajit.
15 Bandyopadhyay, Santisaran.
16 „ Sailendranath.
17 Ghosh, Anilbihari.
18 „ Prabodhchandra.
19 Pal, Praphullakumar.
20 Chakrabarti, Kamalaksha.

II. The undermentioned candidates have qualified in the groups noted against their names of the B. E. (Civil) Examination (Non-Professional Section) held in July 1931 :—

(M) Indicates Mathematics.

(S) „ Science.

(In alphabetical order.)

Bandyopadhyay, Binaykrishna (S) (1).
„ Kumudranjan (S) (1).
„ Nanigopal (M) (S).
„ Susilkumar (S) (1).
Barua, Kamaleswar (M) (S).
Basu, Karunaprasad (M) (S).
„ Prantoshkumar (M) (S).
Bhattacharyya, Jyotiriswar (M) (S).
Biswas, Saratchandra (M) (S).

Chakrabarti, Sambhucharan (M) (8).
Chanda, Ranajitprasad (M) (8).
Chattopadhyay, Ranendrakumar (M) (8).
Dasgupta, Jnanendranath (M) (8).
Datta, Saurendra (M) (8).
„ Sudhamay (S) (1).
Dhara, Bibhutibhushan (S) (1).
Ghosh, Bimalendra (M) (2).
„ Birendrachandra (M) (8).
„ Salilchandra (M) (8).
„ Sailesranjan (M) (8).
„ Sudhindranath (M) (8).
Kanjilal, Sudhirkumar (M) (8).
Kundu, Satyendranath (M) (8).
Lahiri, Sunilchandra (S) (1).
Maitra, Bisweswar (M) (8).
Md. Imamuzzaman Choudhury (S) (1).
Mirza Faiz Ahmed (S) (1).
Mukhopadhyay, Jaydeb (M) (8).
„ Satyapada (M) (8).
„ Sureswar (M) (8).
Pal, Sailendrakrishna (M) (8).
Ray, Gokulchandra (M) (2).
Saha, Susilgobinda (S) (1).
Sarkar, Asutosh (M) (2).
Sengupta, Kartikchandra (M) (8).
Sur, Lokendranath (M) (8).

(1) Candidates must qualify in Mathematics before passing the Professional Section of the B. E. Examination.

(2) Completing B. E. (Non-Professional Section) Examination having already passed in Science.

III. The undermentioned candidates are declared to have passed the I. E. Examination held in July 1931 :—

(In order of merit.)

1 Chakrabarti, Ramballabh.
2 Pal, Sudhamay.
3 Ghosh, Suchitkumar.
4 Gupta, Mihirkumar.
5 Bhattacharyya, Sudhansusekhar.
6 Gangopadhyay, Sudhansuprakas.
7 Majumdar, Jyotiprasad.
8 Datta, Surajkrishna.
9 „ Birendranarayan.
10 Mitra, Nalinbihari.
11 Chaudhuri, Kumudranjan.
12 Ray, Jitendrakumar.
Sinha, Kalikanandan.
14 Bagchi, Brajendrachandra.
15 A. N. Kabiruddin Ahmed.
16 Chaudhuri, Prakritiranjan.
17 Ray, Bhupendranath.
18 Dattachaudhuri, Sukharanjan.
19 A. M. M. A. Hasib.
Datta, Bijaygopal.
21 Purkait, Brajendrabhushan.
22 Mukhopadhyay, Ambikacharan.
23 Raychaudhuri, Hemendrachandra.
24 Ray, Manmathanath.
25 Dasgupta, Medinimohan.
26 Ray, Nisithkumar.
27 Changkakati, Bishnupran.
28 Majumdar, Binaykumar.
29 Md. Kabiruddin Mandal.
30 Basu, Pankajkumar.
31 Bhattacharyya, Kalidas.
32 Khasnabis, Dhirendrakumar.
33 Dastidar, Amulyakrishna.
34 Mitra, Amalprakas.
35 Sengupta, Anilkumar.
36 Chakrabarti, Sudhansukumar.
37 Chattopadhyay, Nirmaleschandra.
38 Mukhopadhyay, Rabindranath, II.
39 Bhattacharyya, Satipati.
40 Bhaumik, Sachindramohan.
41 Ghosh, Siteschandra.
42 Guha, Priyabhushan.
43 Mukhopadhyay, Rabindranath, I.
44 Basuchaudhuri, Ramprasad.
45 Das, Manindranath.

IV. The undermentioned candidates have qualified in the groups shown against their names in Section A of the I. E. Examination held in July 1931 :—

(M) Indicates Mathematics.
(C) „ Chemistry.
(P) „ Physics.

(In alphabetical order.)

Ahamed Paresuddin (M) (C) (P).
Bandyopadhyay, Sudhansubikas (C) (P) (2).
„ Sudhirchandra (M) (C) (P).
Basu, Pankajkumar (P) (1).
Bhattacharyya, Bhabadeb (M) (C) (P).
„ Bhabatosh (M) (C) (P).
„ Kshitischandra (M) (C) (P).
„ Nalinimohan (M) (C) (P).
Chakrabarti, Subodhchandra (M) (C) (P).
Chattopadhyay, Amalkumar (C) (P) (2).
„ Bhupendranath (M) (C) (P).
„ Pranabkumar (C) (P) (2).
„ Sudhirkumar (M) (C) (P).
Chaudhuri, Sachchidananda (C) (P) (2).
„ Subodhchandra (C) (P) (2).
„ Syamakanta (M) (C) (P).
„ Syamapada (M) (C) (P).
Dasgupta, Binaybhushan (C) (P) (2).
„ Sukumar (C) (P) (2).
Datta, Sasankabhushan (C) (P) (2).
„ Sudhirkumar (M) (C) (P).
„ Syamasundar (M) (C) (P).
De, Santoshkumar (M) (C) (P).
Gangopadhyay, Sudhansusekhar (M) (P). (4)
Ghosh, Binaykumar (M) (C) (P).
„ Debkumar (M) (C) (P).
„ Gaurchandra (M) (C) (P).
„ Kalipada (C) (P) (2).
„ Nirmalchandra (M) (C) (3).
„ Sachindranath (C) (P) (2).
Golam Mahammed Khan (M) (C) (P).
James Ivan Raj (C) (P) (2).
Kafiluddin Ahmed (M) (C) (P).
Majumdar, Himansukumar (M) (C) (P).
Mukhopadhyay, Harischandra (M) (C) (P).
„ Krishnakumar (M) (C) (P).
Nandi, Sailendrachandra (M) (C) (P).
Niyogi, Amiyakumar (M) (C) (P).
Pal, Ganes chandra(M) (C) (P).
„ Sailendranath (M) (C) (3).
Pradhan, Vedaprasad (M) (C) (3).
Ray, Batukchandra (M) (C) (P).
„ Santiram (C) (P) (2).
Saha, Ranendrakumar (M) (C) (P).
Samaddar, Sudhirranjan (M) (C) (P).
Sengupta, Binalkumar (C) (P) (2).

(1) Completing I. E. (Section A) Examination having already passed in other groups.

(2) Candidates cannot be allowed to pass in Section B till they pass in Mathematics.

(3) Candidates cannot be allowed to pass in Section B till they pass in Physics.

(4) Candidate cannot be allowed to pass in Section B till he passes in Chemistry.

V. The undermentioned candidates are declared to have passed B. E. Examination (Mechanical) held in July 1931 :—

(Non-Professional Section.)

(In alphabetical order.)

1 Chattopadhyay, Gunendranath.
2 Das, Sunilranjan.

N. SEN,
Controller of Examinations.

Orders by the Vice-Chancellor and Syndicate of the Calcutta University.

Senate House, the 3rd September 1931.

The undermentioned candidate is declared to have passed the D. P. H. Examination, Part I, held in August 1931:—

M. Chit Tway—Calcutta School of Tropical Medicine and Hygiene.

N. SEN,
Controller of Examinations.

Calcutta University.

NOTIFICATION.

Senate House, the 29th August 1931.

The above order cancels the following published in the *Calcutta Gazette*, dated the 27th August 1931, on page 884—

"Orders by the Vice-Chancellor and Syndicate of the Calcutta University.

Senate House, the 28th August 1931.

The undermentioned candidate is declared to have passed the D. P. H. Examination, Part II, held in August 1931:—

M. Chit Tway—Calcutta School of Tropical Medicine and Hygiene.

B. B. Dutt,
for Controller of Examinations."

B. B. DUTT,
for *Controller of Examinations.*

Calcutta University.

NOTICE.

Senate House, the 15th August 1931.

The Senate will proceed in the month of August 1932 to the election of a Tagore Professor of Law for a term of one year, to commence on the 1st August 1933.

The salary of the Professorship is Rs. 9,000 per annum and the Professor will be expected to deliver a course of not less than twelve lectures on one of the following subjects:—

(*i*) The History of Development of Hindu Law in British India.

(*ii*) The History of Development of Moslem Law in British India.

(*iii*) The Law relating to Dissolution of Marriage and Judicial Separation in British India.

The salary of the Professor will be paid in twelve *equal monthly instalments*, the first instalment to be paid on the first day of the month following that in which the first lecture is delivered.

Candidates for the Professorship are required to forward their applications to the Registrar on or before the 1st May 1932, stating on which of the above-named three subjects they are prepared to lecture. Each candidate will forward with his application one hundred copies of a brief synopsis of his proposed lectures; and, if he so pleases, the same number of copies of his introductory lecture.

The Professor will, not later than the month of August following his election, forward to the Registrar a complete copy (manuscript or typewritten) of the lectures which he proposes to deliver. The copy will be forthwith referred to a Committee of the Faculty of Law, consisting of not more than three members to be chosen by the Faculty, who will examine the same and before the expiry of two months from the date of the submission of the copy by the Professor to the Registrar, report to the Faculty whether the work is complete and ready for the Press. If, upon such report, the Faculty are satisfied that the work is complete, the Professor will commence to deliver his lectures within three months from the date of the resolution of the Faculty and shall complete the delivery thereof in another three months. The copy of the lectures delivered will remain in the custody of the Registrar and shall be sent to the Press as soon as practicable after delivery thereof.

If the Professor fails to submit the copy of the lectures, or if the copy submitted be found, on examination, to be incomplete and not ready for the Press, the matter will be referred to the Faculty of Law, upon whose recommendation the Senate may either extend the time or cancel the appointment.

A. N. MUKHERJEE, *Registrar.*

Programme of the Primary (Maktab) Final Examination, Dacca Division, 1931.

Dacca, the 18th August 1931.

Monday, 23rd November 1931.

Forenoon (10 a.m. to 12-45 p.m.)—

Bengali Literature, Grammar and Composition—80 marks.

Reading—25 marks (15+10).

12-45 to 1 p.m.—

Dictation—20 marks.

Afternoon (2 to 4-30 p.m.)—

History—75 marks.

Tuesday, 24th November 1931.

Forenoon (10 a.m. to 1 p.m.)—

Arithmetic and Subhankari—80 marks.

1 to 1-30 p.m.—

Mental Arithmetic—20 marks.

Afternoon (2 to 4-30 p.m.)—

Geography (Oral)—75 marks.

Wednesday, 25th November 1931.

Forenoon (10 a.m. to 12-30 p.m.)—

Hygiene—75 marks.

Afternoon (2 to 4-30 p.m.)—

Zamindari and Mahajani (Optional)—75 marks.

Thursday, 26th November 1931.

Forenoon (10 a.m. to 12-30 p.m.)—

Urdu and Ritual (Oral)—(75) and optional subject Drawing (75).

Afternoon—Optional subjects (Oral) (12-30 to 4-30 p.m.)—

English (75), Manual Work (75), Science (75) and Nature Study (75).

M. M. BAKSH,
Inspector of Schools, Dacca Division.

NOTIFICATION.

The 29th August 1931.

Government Commercial Course Final and Special Examinations, 1931.

The following candidates are declared eligible for prizes and medals:—

Final Examination.

Mohit Kumar Ghosh. First prize of Rs. 75 offered by the Bengal Chamber of Commerce.

Brojendra Krishna Mukerjee. Second prize of Rs. 50 offered by the Bengal National Chamber of Commerce.

Nisha Kanta Roy. Third prize of Rs. 50 offered by the Bengal Chamber of Commerce.

Special Examinations.

Akshay Kumar Bhattacharyya. A prize of Rs. 50 offered by the Bengal Chamber of Commerce for Advanced Book-keeping.

Sarojendra Mohan Mitra. A prize of Rs. 50 offered by the Bengal Chamber of Commerce for Shorthand.

Shyama Charan Bose. First prize—A gold medal for Typewriting offered by Messrs. Remington Typewriter Company.

Birendra Kumar Dutt. Second prize—A silver medal for Typewriting offered by Messrs. Remington Typewriter Company.

V. Ranganathan. Third prize—A silver medal for Typewriting offered by Messrs. Remington Typewriter Company.

Prizes to be offered by the Government Commercial Institute, Calcutta.

Brojendra Krishna Mukerjee. A prize of Rs. 15 for English.

Bata Krishna Bannerjee. A prize of Rs. 15 for Commercial Geography.

(To be declared later). A prize of Rs. 20 for extempore debate.

M. K. GHOSH,

Secy., Govt. Commercial Institute Board.

The Calcutta Gazette

THURSDAY, SEPTEMBER 3, 1931.

Part II

Advertisements.

Notices.

Advertisements, Notices, etc., intended for insertion in this Part of the Gazette cannot be received after noon of Saturday.

IMPERIAL BANK OF INDIA.

Statement of the affairs of the Imperial Bank of India on the 21st August 1931.

LIABILITIES.

	Rs.	A.	P.
Subscribed Capital ..	11,25,00,000	0	0
Capital paid up ..	5,62,50,000	0	0
Reserve ..	5,42,50,000	0	0
Public Deposits ..	20,11,30,000	0	0
Other Deposits ..	64,76,24,000	0	0
Loans against securities per contra ..	....		
Loans from the Government of India under section 20 of the Paper Currency Act, against Inland bills discounted and purchased per contra ..	....		
Contingent liabilities ..	....		
Sundries ..	1,18,02,000	0	0
	97,10,56,000	0	0

ASSETS.

	Rs.	A.	P.
Government Securities ..	29,81,60,000	0	0
Other authorized securities under the Act ..	2,76,77,000	0	0
Ways and Means Advances to the Government of India ..	....		
Loans ..	9,52,21,000	0	0
Cash Credits ..	26,54,99,000	0	0
Inland bills discounted and purchased ..	2,76,35,000	0	0
Foreign bills discounted and purchased ..	39,58,000	0	0
Bullion ..	....		
Dead stock ..	2,72,82,000	0	0
Liability of constituents for contingent liabilities per contra ..	....		
Sundries ..	42,35,000	0	0
Balances with other Banks ..	19,19,000	0	0
	75,15,86,000	0	0
Cash ..	21,94,70,000	0	0
	97,10,56,000	0	0

The above balance sheet includes :—

	£
Deposits in London ..	961,700
Advances and Investments in London ..	926,100
Cash and balances at other Banks in London ..	145,400

Percentage 25·50.

Bank rate 7 per cent.

OSBORNE A. SMITH,
K. M. MACDONALD,
Managing Governors.

(1812—1)

LAND SALE NOTICES.

Notification A.

NOTICE is hereby given, under sections 6 and 13, Act XI of 1859, that the undermentioned estate and shares of estate in the district of Burdwan will be put up for sale at the office of the Collector of that district on the 25th September 1931, at 12 noon, for arrears of revenue and other demands for Jaistha kist, 1338 B.S., which by law are realizable as arrears of land revenue.

When in columns 5, 7 and 9 of the following statement it is stated that only a share is to be sold, it is to be understood that a separate account is kept for that share :—

Tauzi No.	Name of mahal and pargana.	Sadar jama of whole estate.	Whether the whole estate is to be sold.	If only a share is to be sold, specification of such share or shares.	Names of proprietors of property to be sold.	If only a share is to be sold, the sadar jama of such share.	If the whole estate is to be sold, the arrears due from it.	If only a share is to be sold, the arrears due from it.
1	2	3	4	5	6	7	8	9
		Rs. A. P.				Rs. A. P.		Rs. A. P.
21	Mahata, etc., pargana Bagha.	11,677 0 0	..	S. A. No. 2—1a. 5gds. 3k. 2kr. 1½d. share is to be sold. All other shares than that specified will be excluded from the sale.	Surja Kumari Dasi, trustee to the estate of late Bakkeswar Ta and others.	947 11 9	..	82 3 2

Burdwan, the 17th August 1931. H. C. BOSE, Collector (offg.)

Notification A.

NOTICE is hereby given, under sections 6 and 13, Act XI of 1859, that the undermentioned estate and shares of estate in the district of Burdwan will be put up for sale at the office of the Collector of that district on the 25th September 1931, at 12 noon, for arrears of revenue and other demands for Jaistha kist, 1338 B.S., which by law are realizable as arrears of land revenue.

When in columns 5, 7 and 9 of the following statement it is stated that only a share is to be sold, it is to be understood that a separate account is kept for that share :—

Tauzi No.	Name of mahal and pargana	Sadar jama of whole estate.	Whether the whole estate is to be sold.	If only a share is to be sold, specification of such share or shares.	Names of proprietors of property to be sold.	If only a share is to be sold, the sadar jama of such share	If the whole estate is to be sold, the arrears due from it.	If only a share is to be sold, the arrears due from it.
1	2	3	4	5	6	7	8	9
		Rs. A. P.				Rs. A. P.		Rs. A. P.
62	Palsona, pargana Dheyan.	7,400 11 11	..	Residuary—8as. 6gds. 0k. 2kr. ½d. share is to be sold. All other shares than that specified will be excluded from the sale.	Paramsuk Chandra and others.	3,843 5 11	..	335 9 7

Burdwan, the 17th August 1931. H. C. BOSE, Collector (offg.).

Notification A.

NOTICE is hereby given, under sections 6 and 13, Act XI of 1859, that the undermentioned estate and shares of estate in the district of Burdwan will be put up for sale at the office of the Collector of that district on the 25th September 1931, at 12 noon, for arrears of revenue and other demands for Jaistha kist, 1338 B.S., which by law are realizable as arrears of land revenue.

When in columns 5, 7 and 9 of the following statement it is stated that only a share is to be sold, it is to be understood that a separate account is kept for that share :—

Tauzi No.	Name of mahal and pargana.	Sadar jama of whole estate.	Whether the whole estate is to be sold.	If only a share is to be sold, specification of such share or shares.	Names of proprietors of property to be sold.	If only a share is to be sold, the sadar jama of such share.	If the whole estate is to be sold, the arrears due from it.	If only a share is to be sold, the arrears due from it.
1	2	3	4	5	6	7	8	9
		Rs. A. P.				Rs. A. P.		Rs. A. P.
62	Palsona, pargana Dheyan.	7,400 11 11	....	Separate account No. 5—1 a. 5 gds. 2½dt. share is to be sold. All other shares than that specified will be excluded from the sale.	Biman Kumari Dasi as guardian mother of minor sons Pramatha Nath Chandra and others, and others.	579 12 9	....	23 7 1

Burdwan, the 17th August 1931. H. C. BOSE, Collector (offg.).

Notification A.

NOTICE is hereby given, under sections 6 and 13, Act XI of 1859, that the undermentioned estate and shares of estate in the district of Burdwan will be put up for sale at the office of the Collector of that district on the 25th September 1931, at 12 noon, for arrears of revenue and other demands for Jaistha kist, 1338 B. S., which by law are realizable as arrears of land revenue.

When in columns 5, 7 and 9 of the following statement it is stated that only a share is to be sold, it is to be understood that a separate account is kept for that share :—

Tauzi No.	Name of mahal and pargana.	Sadar jama of whole estate.	Whether the whole estate is to be sold.	If only a share is to be sold, specification of such share or shares.	Names of proprietors of property to be sold.	If only a share is to be sold, the sadar jama of such share.	If the whole estate is to be sold, the arrears due from it.	If only a share is to be sold, the arrears due from it.
1	2	3	4	5	6	7	8	9
		Rs. A. P.				Rs. A. P.		Rs. A. P.
62	Palsona, pargana Dheyan.	7,400 11 11	....	Separate account No. 1—2 annas share is to be sold. All other shares than that specified will be excluded from the sale.	Paramauk Chandra and others.	925 1 6	....	120 11 1

Burdwan, the 17th August 1931. H. C. BOSE, Collector (offg.).

Notification A.

NOTICE is hereby given, under sections 6 and 13, Act XI of 1859, that the undermentioned estate and shares of estate in the district of Burdwan will be put up for sale at the office of the Collector of that district on the 25th September 1931, at 12 noon, for arrears of revenue and other demands for Jaistha kist, 1338 B. S., which by law are realizable as arrears of land revenue.

When in columns 5, 7 and 9 of the following statement it is stated that only a share is to be sold, it is to be understood that a separate account is kept for that share :—

Tauzi No.	Name of mahal and pargana.	Sadar jama of whole estate.	Whether the whole estate is to be sold.	If only a share is to be sold, specification of such share or shares.	Names of proprietors of property to be sold.	If only a share is to be sold, the sadar jama of such share.	If the whole estate is to be sold, the arrears due from it.	If only a share is to be sold, the arrears due from it.
1	2	3	4	5	6	7	8	9
		Rs. A. P.				Rs. A. P.		Rs. A. P.
65	Majkda, pargana Patuli.	9,381 6 9	..	Residuary— 1 a. 15 gds. 2 k. 2 dt. share is to be sold. All other shares than that specified will be excluded from the sale.	Ramranjan Mollik and others.	1,025 15 6	..	48 8 10

Burdwan, the 17th August 1931. H. C. BOSE, Collector (offg.).

Notification A.

NOTICE is hereby given, under sections 6 and 13, Act XI of 1859, that the undermentioned estate and shares of estate in the district of Burdwan will be put up for sale at the office of the Collector of that district on the 25th September 1931, at 12 noon, for arrears of revenue and other demands for Jaistha kist, 1338 B.S., which by law are realizable as arrears of land revenue.

When in columns 5, 7 and 9 of the following statement it is stated that only a share is to be sold, it is to be understood that a separate account is kept for that share :—

Tauzi No.	Name of mahal and pargana.	Sadar jama of whole estate.	Whether the whole estate is to be sold.	If only a share is to be sold, specification of such share or shares.	Names of proprietors of property to be sold.	If only a share is to be sold, the sadar jama of such share.	If the whole estate is to be sold, the arrears due from it.	If only a share is to be sold, the arrears due from it.
1	2	3	4	5	6	7	8	9
		Rs. A. P.				Rs. A. P.		Rs. A. P.
65	Maijda, pargana Patuli.	9,381 6 9	..	Separate account No. 1— 2 as. 13 gds. 1 k. 1 kr. share is to be sold. All other shares than that specified will be excluded from the sale.	Ramranjan Mollik and others.	1,566 9 6	....	135 7 3

Burdwan, the 17th August 1931. H. C. BOSE, Collector (offg.).

Notification A.

NOTICE is hereby given, under sections 6 and 13, Act XI of 1859, that the undermentioned estate and shares of estate in the district of Burdwan will be put up for sale at the office of the Collector of that district on the 25th September 1931, at 12 noon, for arrears of revenue and other demands for Jaistha kist, 1338 B.S., which by law are realizable as arrears of land revenue.

When in columns 5, 7 and 9 of the following statement it is stated that only a share is to be sold, it is to be understood that a separate account is kept for that share :—

Tauzi No.	Name of mahal and pargana.	Sadar jama of whole estate.	Whether the whole estate is to be sold.	If only a share is to be sold, specification of such share or shares.	Names of proprietors of property to be sold.	If only a share is to be sold, the sadar jama of such share.	If the whole estate is to be sold, the arrears due from it.	If only a share is to be sold, the arrears due from it.
1	2	3	4	5	6	7	8	9
		Rs. A. P.				Rs. A. P.		Rs. A. P.
66	Majida, pargana Patuli.	9,381 6 9	..	Separate account No. 7—1a. 15 gds. 2k. 2dt. share is to be sold. All other shares than that specified will be excluded from the sale.	Panchoo Gopal Chakraverty.	1,044 10 2	..	36 4 9

Burdwan, the 17th August 1931. H. C. BOSE, Collector (offg.).

Notification A.

NOTICE is hereby given, under sections 6 and 13, Act XI of 1859, that the undermentioned estate and shares of estate in the district of Burdwan will be be put up for sale at the office of the Collector of that district on the 25th September 1931, at 12 noon, for arrears of revenue and other demands for Jaistha kist, 1338 B.S., which by law are realizable as arrears of land revenue.

When in columns 5, 7 and 9 of the following statement it is stated that only a share is to be sold, it is to be understood that a separate account is kept for that share :—

Tauzi No.	Name of mahal and pargana.	Sadar jama of whole estate.	Whether the whole estate is to be sold.	If only a share is to be sold, specification of such share or shares.	Names of proprietors of property to be sold.	If only a share is to be sold, the sadar jama of such share.	If the whole estate is to be sold, the arrears due from it.	If only a share is to be sold, the arrears due from it.
1	2	3	4	5	6	7	8	9
		Rs. A. P.				Rs. A. P.		Rs. A. P.
65	Majida, pargana Patuli.	9,381 6 9	..	Separate account No. 6—1a. 15gds. 2k. 2dt. share is to be sold. All other shares than that specified will be excluded from the sale.	Amiya Prosad Mollik and others.	1,044 6 6	....	85 5 9

Burdwan, the 17th August 1931. H. C. BOSE, Collector (offg.).

Notification A.

NOTICE is hereby given, under sections 6 and 13, Act XI of 1859, that the undermentioned estate and shares of estate in the district of Burdwan will be put up for sale at the office of the Collector of that district on the 25th September 1931, at 12 noon, for arrears of revenue and other demands for Jaistha kist, 1338 B.S., which by law are realizable as arrears of land revenue.

When in columns 5, 7 and 9 of the following statement it is stated that only a share is to be sold, it is to be understood that a separate account is kept for that share :—

Tauzi No.	Name of mahal and pargana.	Sadar jama of whole estate.	Whether the whole estate is to be sold.	If only a share is to be sold, specification of such share or shares.	Names of proprietors of property to be sold.	If only a share is to be sold, the sadar jama of such share.	If the whole estate is to be sold, the arrears due from it.	If only a share is to be sold, the arrears due from it.
1	2	3	4	5	6	7	8	9
		Rs. A. P.				Rs. A. P.		Rs. A. P.
65	Majida, pargana Patuli.	9,381 6 9	..	Separate account No. 8—2 as. 13 gds. 1 k. 1 kr. share is to be sold. All other shares than that specified will be excluded from the sale.	Ramranjan Mollik, and others.	1,566 10 1	..	135 3 7

Burdwan, the 17th August 1931. H. C. BOSE, Collector (offg.).

Notification A.

NOTICE is hereby given, under sections 6 and 13, Act XI of 1859, that the undermentioned estate and shares of estate in the district of Burdwan will be put up for sale at the office of the Collector of that district on the 25th September 1931, at 12 noon, for arrears of revenue and other demands for Jaistha kist, 1338, B.S., which by law are realizable as arrears of land revenue.

When in columns 5, 7 and 9 of the following statement it is stated that only a share is to be sold, it is to be understood that a separate account is kept for that share :—

Tauzi No.	Name of mahal and pargana.	Sadar jama of whole estate.	Whether the whole estate is to be sold.	If only a share is to be sold, specification of such share or shares.	Names of proprietors of property to be sold.	If only a share is to be sold, the sadar jama of such share.	If the whole estate is to be sold, the arrears due from it.	If only a share is to be sold, the arrears due from it.
1	2	3	4	5	6	7	8	9
		Rs. A. P.				Rs. A. P.		Rs. A. P.
5170	Dahukadanga, pargana Sahabad.	6,421 15 8	..	Separate account No. 1—2 as. 13 gds. 1 k. 1 kr. share is to be sold. All other shares than that specified will be excluded from the sale.	Indumati Debi as guardian of minor Baidya Nath Ray.	1,070 5 4	..	141 14 0

Burdwan, the 17th August 1931.

H. C. BOSE, Collector (offg.).

Notification A.

NOTICE is hereby given, under sections 6 and 13, Act XI of 1859, that the undermentioned estates and shares of estates in the district of Chittagong will be put up for sale at the office of the Collector of that district on the 23rd November 1931 at 12 noon for arrears of revenue and other demands which by law are realizable as arrears of land revenue remaining unpaid on the latest day of payment, the 29th June 1931.

When in columns 5, 7 and 9 of the following statement it is stated that only a share is to be sold, it is to be understood that a separate account is kept for that share :—

Tauzi No.	Name of mahal and pargana.	Sadar jama of whole estate.	Whether the whole estate is to be sold.	If only a share is to be sold, specification of such share or shares.	Names of proprietors of property to be sold.	If only a share is to be sold, the sadar jama of such share.	If the whole estate is to be sold, the arrears due from it.	If only a share is to be sold, the arrears due from it.
1	2	3	4	5	6	7	8	9
		Rs. A. P.				Rs. A. P.	Rs. A. P.	Rs. A. P.
33040	Thana Chakaria, mauza Manikpur, taluk Tufan Ali Munshi.	893 4 0	Whole ..	....	Sm. Gol Chhar Begum for self and for (a) Sm. Nazooma Khatun and others.	....	83 12 0	....
33641	Thana Chakaria, mauza Dulahazara, Kaimi Taluk Kashi Chandra Sen, son of late Debi Das Sen of Gairala.	1,055 3 0	Share ..	Residuary share. (All other shares than that specified will be excluded from sale.)	Makbul Ahmed and others.	703 7 0	....	131 14 6

Chittagong, the 24th August 1931.

G. K. GHOSH CHAUDHURI, *for* Collector.

Notification A.

NOTICE is hereby given, under sections 6 and 13, Act XI of 1859, that the undermentioned estates and shares of estates in the district of Faridpur will be put up for sale at the office of the Collector of that district on the 25th day of September 1931, at 11 a.m., for arrears of revenue and other demands which by law are realizable as arrears of land revenue.

When in columns 5, 7 and 9 of the following statement it is stated that only a share is to be sold, it is to be understood that a separate account is kept for that share :—

Tauzi No.	Name of mahal and pargana.	Sadar jama of whole estate.	Whether the whole estate is to be sold.	If only a share is to be sold, specification of such share or shares.	Names of proprietors of property to be sold.	If only a share is to be sold, the sadar jama of such share.	If the whole estate is to be sold, the arears, due from it.	If only a share is to be sold, the arrears due from it.
1	2	3	4	5	6	7	8	9
		Rs. A. P.				Rs. A. P.	Rs. A. P.	Rs. A. P
1199	Lakshmandia kismat taluk Banamali Basu, pargana Nashibashi	911 10 6	Whole	....	Surendra Nath Guha	..	142 11 11	..
2486	Braja Nath Pal Choudhury, pargana Satair.	42,633 7 4	No ..	Residuary share consisting of 5 annas share only. All other shares than that specified above will be excluded from sale, viz.— Separate account No. 1 of 6 annas. Separate account No. 3 of 2 annas. Separate account No. 5 of 2 annas. Separate account No. 6 of 1 anna.	Sitala Bala Devi ..	13,322 15 3	..	3,372 2 0
2486	Ditto ..	42,633 7 4	No ..	Separate account No. 5 consisting of 2 annas share only. All other shares than that specified above will be excluded from sale, viz :— Residuary share consisting of 5 annas only. Separate account No. 1 of 6 annas share. Separate account No. 3 of 2 annas share. Separate account No. 6 of 1 anna share.	Sarat Chandra Goswami	5,329 2 11	..	1,348 11 11
3555	Taluk Ratneswar Pal and others, pargana Nasaratshahi.	2,559 13 8	Whole	....	Jyotish Chandra Mitra, Nalini Kanta Pal Choudhury, Srish Chandra Das, Sakhi Sundari Dasya and others.	..	462 9 1	..
2633	Deara taluk Girish Chandra Singha, Selamatpurchar, pargana Naldi.	775 0 0	Do. ..	....	Hon'ble Arun Chandra Singha and others as executors to the estate of late Raja Birendra Chandra Singha of Paikpara.	..	96 14 0	..
6278	Deara taluk Chandra Mohan Roy, Saila Char, pargana Nasti.	671 0 0	Do. ..	....	Khetra Mohan Bhowmik.	..	83 14 0	..
6447	Taluk—Surplus land of Nemua known as Sakhipore kismat resumed by deara, pargana Rambhawal Tappa.	586 0 0	Do. ..	....	Jogamaya *alias* Indra Bala Chowdhurani.	..	73 4 0	..
6498	Deara taluk Madan Mohan Banerjee, alluvial accretion to Mahiskhalichar, pargana Nasti.	1,791 0 0	Do. ..	....	Madan Mohan Banerjee	..	55 11 0	..
6504	Deara taluk Golam Ahammad Choudhury, alluvial accretion to Char Dubail resumed by deara, pargana Jalalpur.	1,886 0 0	Do. ..	....	Gobinda Lal Mukhopadhay.	..	235 12 0	..
6604	Char Chanda I, pargana Amirabad.	756 0 0	Do. ..	....	Jogamaya *alias* Indra Bala Devi Chowdhurani.	..	94 8 0	..
6771	Deara taluk Fazlealli Khan, pargana Kasimpur Sehalapatti.	6,121 0 0	Do. ..	....	Abdul Latif Bhuya ..	..	6,121 0 0	..

Faridpur, the 15th August 1931.

M. S. BAKHT, *for* Collector.

Notification A.

NOTICE is hereby given, under sections 6 and 13, Act XI of 1859, that the undermentioned estate and shares of estate in the district of Rajshahi will be put up for sale at the office of the Collector of that district on the 26th September 1931, at 12 noon, for arrears of revenue and other demands which by law are realizable as arrears of land revenue.

When in columns 5, 7 and 9 of the following statement it is stated that only a share is to be sold, it is to be understood that a separate account is kept for that share :—

Tauzi No.	Name of mahal and pargana.	Sadar jama of whole estate.	Whether the whole estate is to be sold	If only a share is to be sold, specification of such share or shares.	Names of proprietors of property to be sold.	If only a share is to be sold, the sadar jama of such share.	If the whole estate is to be sold, the arrears due from it.	If only a share is to be sold, the arrears due from it.
1	2	3	4	5	6	7	8	9
		Rs. A. P.				Rs A. P.	Rs. A. P.	Rs. A. P.
363, S A. No. 1.	Taraf Mahishkundi, pargana Chandalai.	7,192 14 0	No ..	4 as. 10 gds. share only. All other shares than that specified will be excluded from the sale	Bibi Jamilatannesa and others.	2,023 0 0	....	L.R — 151 5 0 Cess— 57 12 0 — 209 1 0

This estate is being advertised for sale for instalments of revenue which were due on or before the 30th Jaistha 1338 B. S. of which the latest date of payment was 29th June 1931.

Rajshahi, the 15th August 1931.

L. G. PINNELL, Collector.

Notification A.

NOTICE is hereby given, under sections 6 and 13, Act XI of 1859, that the undermentioned estate and shares of estate in the district of Rajshahi will be put up for sale at the office of the Collector of that district on the 26th September 1931, at 12 noon, for arrears of revenue and other demands which by law are realizable as arrears of land revenue.

When in columns 5, 7 and 9 of the following statement it is stated that only a share is to be sold, it is to be understood that a separate account is kept for that share :—

Tauzi No.	Name of mahal and pargana.	Sadar jama of whole estate.	Whether the whole estate is to be sold.	If only a share is to be sold, specification of such share or shares.	Names of proprietors of property to be sold.	If only a share is to be sold, the sadar jama of such share.	If the whole estate is to be sold, the arrears due from it.	If only a share is to be sold, the arrears due from it.
1	2	3	4	5	6	7	8	9
		Rs. A. P.				Rs. A. P.	Rs. A. P.	Rs. A. P.
393 Ej-mali.	Mahishkundi, pargana Chandalai	7,192 14 0	No ..	11 as. 10 gds. share only. All other shares than that specified will be excluded from the sale.	Maulvi Chowdhuri Mahamed Mazharal Haque and others.	5,169 14 0	..	L. R.— 1,054 4 3 Cess— 293 4 0 Cost— 3 5 3 1,350 13 6

This estate is being advertised for sale for instalments of revenue which were due on or before the 30th Jaistha 1338 B. S of which the latest date of payment was 29th June 1931.

Rajshahi, the 15th August 1931.

L. G. PINNELL, Collector.

Notification A.

NOTICE is hereby given, under sections 6 and 13, Act XI of 1859, that the undermentioned estate and shares of estate in the district of Rajshahi will be put up for sale at the office of the Collector of that district on the 26th September 1931, at 12 noon, for arrears of revenue and other demands which by law are realizable as arrears of land revenue :—

Tauzi No.	Name of mahal and pargana.	Sadar jama of whole estate.	Whether the whole estate is to be sold.	If only a share is to be sold, specification of such share or shares.	Names of proprietors of property to be sold.	If only a share is to be sold, the sadar jama of such share.	If the whole estate is to be sold, the arrears due from it.	If only a share is to be sold, the arrears due from it.
1	2	3	4	5	6	7	8	9
		Rs. A. P.					Rs. A. P.	
1845	Jiasindhu, pargana Jiasindhu	6,411 5 0 Police— 64 4 0	Yes ..	....	Jnanendra Nath Khan and others.	..	L. R.— 48 2 7 Cess— 187 2 9 235 5 4	..

This estate is being advertised for sale for instalments of revenue which were due on or before the 30th Jaistha 1338 B.S. of which the latest date of payment was 29th June 1931.

Rajshahi, the 15th August 1931.

L. G. PINNELL, Collector.

Notification A.

NOTICE is hereby given, under sections 6 and 13, Act XI of 1859, that the undermentioned estates and shares of estates in the district of Dacca will be put up for sale at the office of the Collector of that district on the 20th September 1931, at 12 noon, for arrears of revenue and other demands which by law are realizable as arrears of land revenue.

When in columns 5, 7 and 9 of the following statement it is stated that only a share is to be sold, it is to be understood that a separate account is kept for that share :—

Tauzi No.	Name of mahal and pargana.	Sadar jama of whole estate.	Whether the whole estate is to be sold.	If only a share is to be sold, specification of such share or shares.	Names of proprietors of property to be sold.	If only a share is to be sold, the sadar jama of such share.	If the whole estate is to be sold, the arrears due from it.	If only a share is to be sold, the arrears due from it.
1	2	3	4	5	6	7	8	9
		Rs. A. P.				Rs. A. P.		Rs. A. P.
31	Zamindari Ram Krishna Basu Chowdhuri, pargana Durgapur.	5,841 7 6	..	Residue— Part I—15 gds. 1 kt. 2 tls. Part II—1a. 8 gds. 8cr. 2 kt. 12 tls. Part III—5 as. 1 gd. 2 cr. 2 kt. 12 tls. Part IV—5 as. 10 gds. 3 cr. 2 kt. Part V—5 as. 10 gds. 3 cr. 2 kt. Part VI—5 as. 10 gds. 3 cr. 2 kt. 1 til. Part VII—3 as. 4 gds. 2 cr. 2 kt. 5 tls. Part VIII—6 as. 7 gds. 2 cr. 6 tls. Part IX—7 as. 5 gds. Part X—6 as. 12 gds. 2 cr. 18 tls. Part XI—5 as. 10 gds. 3 cr. 2 kt. 1 til. Part XII—9 gds. 2 cr. 18 tls. Part XIII 5 as. 10 gds. 3 cr. 2 kt. Part XIV—1 a. 9 gds. 2 cr. 2 kt. Part XV—5 as. 10 gds. 3 cr. 2 kt. 1 til only. All other shares than that specified above will be excluded from sale. Part I—Separate account Nos. 1, 2, 5, 7-16, 18, 19-24, 26 and 30. Hishya 15 as. 4 gds. 3 cr. 1 kt. 18 tls. Part II—Separate account Nos. 2, 16, 27 29 2 and 33. Hishya 14 as. 11 gds. 8 tls. Part III—Separate account Nos. 2, 3, 6, 11-16, 18, 26, 30 and 31. Hishya 10 as. 18 gds. 1 cr. 8 tls. Part IV—Separate account Nos. 2, 11-16, 26 and 30. Hishya 10 as. 9 gds. 1 kt. Part V—Separate account Nos. 2, 11-16, 26 and 30. Hishya 10 as. 9 gds. 1 kt. Part VI—Separate account Nos. 2, 11-16, 26 and 30. Hishya 10 as. 9 gds. 19 tls. Part VII—Separate account Nos. 2, 4, 11-18. Hishya 12 as. 15 gds. 1 cr. 15 tls. Part VIII—Separate account Nos. 2, 11-16, 22, 26 and 30. Hishya 9 as. 12 gds. 1 cr. 2 kt. 14 tls. Part IX—Separate account Nos. 2, 11-16, 22 and 30. Hishya 8 as. 15 gds. Part X—Separate account Nos. 2, 11-16 and 30. Hishya 9 as. 7 gds. 1 cr. 2 kt. 2 tls. Part XI—Separate account Nos. 2, 11-16, 26 and 30. Hishya 10 as. 9 gds. 19 tls.	Pratima Sundari Chowdhurani and others. Hem Chandra Das and others. Ananda Mohan Shaha and others. Pratima Sundari Chowdhurani and others. Ditto. Ditto. Radharani Chowdhurani, executrix to the estate of Prasanna Kumar Ray and others. Sudhir Chandra Das and others. Ditto. Ditto. Ditto. Ditto. Ditto. Ditto. Ditto.	1,395 1 3	..	151 13 9

Tauzi No.	Name of mahal and pargana.	Sadar jama of whole estate.	Whether the whole estate is to be sold.	If only a share is to be sold, specification of such share or shares.	Names of proprietors of property to be sold.	If only a share is to be sold, the sadar jama of such share.	If the whole estate is to be sold, the arrears due from it.	If only a share is to be sold, the arrears due from it.
1	2	3	4	5	6	7	8	9
		Rs. A. P.				Rs. A. P.	Rs. A. P.	Rs. A. P.
				Part XII—Separate account Nos. 2, 16 and 24. Hishya 15 as. 10 gds. 1 cr. 2 kt. 2 tils. Part XIII—Separate account Nos. 2, 11-16, 26 and 30. Hishya 10 as. 9 gds. 1 kt. Part XIV—Separate account Nos. 2, 11-16, 25, 26 and 30. Hishya 14 as. 10 gds. 1 cr. 1 kt. Part XV—Separate account Nos. 2, 11-16, 26 and 30. Hishya 10 as. 9 gds. 19 tils only.			
315	Zamindari Mahajan Naba Krishna Bahadur, pargana Tappo Habeli, Mamudpur.	1,547 11 9	16 annas	....	Prafulla Nalini Debi	..	278 5 9	..
9069	Deara Mahal Char Kukurhati, pargana Khalilabad.	1,788 8 0	16 annas	....	Sudhir Chandra Das and others.	..	153 2 0	..
9762	Mayadi Mahal Char Dilarpur, pargana Bardakhat.	4,775 15 8	16 annas	....	Bepin Behari Saha Sardar and others.	..	1,190 14 3	..
9964	Zamindari Sambu Chandra Chowdhuri, pargana Tappo Ran Bhawal.	693 9 0	16 annas	....	Satyendra Chandra Chowdhuri.	..	112 4 0	..
10408	Daimi Mahal Char Kalmi, pargana Sindurl.	1,339 6 7	..	Separate account No. 1 for 8 annas share only. All other shares than that specified above will be excluded from sale. Residue and separate account No. 2. Hishya 8 annas.	Satya Charan Datta.	669 11 4	..	85 13 2
10622	Deara Mahal Char Gobindapur, pargana Sindurl.	2,801 13 0	16 annas	....	Surendra Chandra Datta and others.	..	1,401 13 0	..
10804	Deara Mahal Kunjanagar, pargana Bikrampur.	1,288 0 0	16 annas	....	Manmatha Nath Basak and others.	..	322 0 0	..
10847	Deara Mahal Char Masura, pargana Bikrampur.	2,441 0 0	16 annas	....	Khetra Mohan Poddar and others.	..	229 0 0	..
11037	Taluk Char Binodpur, pargana Makimpur.	953 5 0	16 annas	....	Manomohan Neogi and others.	..	129 0 3	..
15564	Mayadi Mahal Char Kahrangi, pargana Jahangirnagar.	1,380 12 0	..	Separate account No. 1 for 8 annas share only. The residue share of 8 annas only will be excluded from sale.	Mrs. Mariam Abraham Aviet and others.	694 14 0	..	99 14 0
15642	Deara Mahal Char Saidpur, pargana Ran Bhawal.	555 0 0	16 annas	....	Mahammad Barkatulla and others.	..	100 0 0	..
15730	Deara Mahal Ruhitpur, pargana Jahangirnagar.	1,665 0 0	16 annas	....	Ananda Kumari Debi and others.	..	99 8 4	..
15862	Baherchar No. 164, pargana Bardakhat.	5,686 5 0	..	Residue—Hisya 2 as. 1 gd. 1cr. 2 kt. 10 tils share. Separate account Nos. 1-29.—Hishya 13 as. 18 gds. 2 cr. 10 tils will be excluded from sale.	Gunabala Ray Chowdhurani and others.	736 8 9	..	122 2 4
15862	Ditto ..	5,686 5 0	..	Separate account No. 2 for 2 as. 13 gds 1 cr. 1 kt. Residue and separate account Nos. 1 and 3-20.—Hishya 13 as. 6 gds. 2cr. 2 kt. share will be excluded from sale.	Bankim Chandra Ray Chowdhuri, as manager on behalf of Trailokya Nath Ray Chowdhuri.	947 11 6		175 15 0
16032	Mayadi Mahal Char Dilarpur Nasaradkli Sarkar, pargana Bardakhat.	2,503 7 5	16 annas	....	Lalit Mohan Ray and others.	..	626 0 0	..
16060	Daimi Mahal Tarki Char, Tappe Ran Bhawal.	831 11 1	..	Separate account No. 1 for 9 as. 16 gds. 2kt. 6 tils share only. Residue and separate account No. 2.—Hishya 6 as. 3 gds. 3cr. 14 tils share will be excluded from sale.	Hem Chandra Chakravarty and others.	509 8 7	..	124 12 5
16090	Deara Mahal Kismat Hargaz Birendra Nath Ray Chowdhuri, pargana Isakabad.	1,069 4 7	16 annas	....	Birendra Nath Ray Chowdhuri.	..	129 12 0	..

Dacca, the 15th August 1931.

R. M. CHAKRAVARTI, Collector.

Notification A.

NOTICE is hereby given, under sections 6 and 13, Act XI of 1859, that the undermentioned estates and shares of estates in the district of Murshidabad will be put up for sale at the office of the Collector of that district on the 26th September 1931, at 12-30 p.m., for arrears of revenue and other demands which by law are realizable as arrears of land revenue.

When in columns 5, 7 and 9 of the following statement it is stated that only a share is to be sold, it is to be understood that a separate account is kept for that share :—

Tauzi No.	Name of mahal and pargana.	Sadar jama of whole estate.	Whether the whole estate is to be sold.	If only a share is to be sold, specification of such share or shares.	Names of proprietors of property to be sold.	If only a share is to be sold, the sadar jama of such share.	If the whole estate is to be sold, the arrears due from it.	If only a share is to be sold, the arrears due from it.
1	2	3	4	5	6	7	8	9
		Rs. A. P.				Rs. A. P.	Rs. A. P.	Rs. A. P.
5/11	Dehi Kutubpur, pargana Serpur.	..	No ..	Share—2 as. 12 gds. 1 c. 2 kg. 3½ tils. All other shares than that specified will be excluded from the sale.	Syed Mahammad Maswood and others.	1,172 15 0	..	24 14 6
Police	Ditto	..	No ..	Police ..	Ditto ..	0 0 0	..	1 6 9
14	Kulberia Kismat Paragana, pargana Kulberia.	631 14 4	Yes ..	..	Saradindu Ganguli as receiver, Dangapara estate.	..	28 12 0	..
89	Jhikarhati, pargana Sahajadpur.	1,142 9 0	Yes ..	..	Sudhir Krishna Banerjee, sebait of Sree Sree Iswar Radhakanta Jew Thakur.	..	58 0 0	..
70/ Ejmali.	Gankar Dehi, pargana Gankar.	..	No ..	Ejmali share—4 as. 11 gds. 1 c. 1 kr. All other shares than that specified will be excluded from the sale.	Nanda Kumar Baral and others, sebait of Brindaban Behari Deb Thakur.	4,196 6 5	..	177 14 3
Police	Ditto ..	..	No ..	Police ..	Ditto ..	75 8 3	..	15 11 8
70/1	Ditto ..	..	No	Share—11 as. 8 gds. 2 c. 2 kr. All other shares than that specified will be excluded from the sale.	Shyama Charan Nath and another as manager to the estate of Nitya Kali Dasi, sebait of Sri Sri Iswar Brindaban Behari Deb Thakur.	10,448 13 0	..	534 9 3
Police	Ditto	..	No ..	Ditto ..	Ditto ..	189 0 7	..	47 4 1
91	Ganja Raipur, pargana Gowas.	618 10 11	Yes ..	..	Saradindu Ganguli as receiver Dangapara estate, and others.	..	43 3 4	..
113	Mauza Chamunda, pargana Muraripur.	756 5 8	Yes ..	..	Kalicharan Sinha and others.	..	6 15 6	..
165	Taraf Tola Nowapara Kismat, pargana Gankar.	2,659 2 11	Yes ..	..	Ditto ..	..	55 7 6	..
167/ Ejmali.	Kismat Paragana Dayanagar, pargana Dayanagar.	..	No	Share—12 annas. All other shares than that specified will be excluded from the sale.	Chaudhuri Mahammad Abdul Huq and others.	7,193 1 6	..	346 6 4
200/ Ejmali	Mauza Nowda Belun, pargana Dhawa.	..	No	Ejmali share - 10 as. 13 gds. 1 k. 1 kr. All other shares than that specified will be excluded from the sale.	Birangana Debi, as mother and guardian of Sudhindra Nath Mukherjee, and others.	1,179 10 6	..	112 15 9
211	Taraf Narayanpur Jugindi, pargana Rosen Ujian.	1,260 6 3	Yes ..	..	Rukhal Prasad Bagchi and others.	..	8 13 1	..
264	Dehi Bara Simulia, pargana Gankar.	3,575 6 3	Yes ..	..	Doman Prasad Chandra.	..	102 14 2	..
Police	Ditto ..	64 11 4	..	..	Ditto ..	..	8 1 4	..
327	Kismat Baintali, pargana Baintali.	2,561 1 1	Yes ..	..	Kalicharan Sinha and others.	..	28 12 9	..

Tauzi No.	Name of mahal and pargana.	Sadar jama of whole estate.	Whether the whole estate is to be sold.	If only a share is to be sold, specification of such share or shares.	Names of proprietors of property to be sold.	If only a share is to be sold, the sadar jama of such share.	If the whole estate is to be sold, the arrears due from it.	If only a share is to be sold, the arrears due from it.
1	2	3	4	5	6	7	8	9
		Rs. A. P.				Rs. A. P.	Rs. A. P.	Rs. A. P.
328	Kismat Pargana Baintali, pargana Baintali.	2,316 8 0	Yes ..	.	Kalicharan Sinha and others.	..	32 0 0	..
364	Mauza Masumabad Kismat, pargana Masumabad.	1,236 1 1	Yes ..	..	Nitya Kali Dasya ..	..	47 4 0	.
360	Mahammadpur Jamserpur, pargana Dashazari.	752 4 10	Yes ..	..	Kalicharan Sinha and others.	.	85 5 4	..
387/3	Mahadevnagar Taraf, pargana Rajshahi.	..	No ..	Share—4 as. 12 gds. 2 kora. All other shares than that specified will be excluded from the sale.	Umapada Singha and others.	539 0 9	.	21 0 0
403	Mauza Rajhati Kismat, pargana Beherole.	2,373 5 5	Yes ..	..	Kamal Krishna Ghose and others, joint manager to the estate of Kumar Dhiraj Ballav Roy, lunatic.	..	1,191 7 7	..
508/ Ejmali.	Dehi Atai, pargana Serpur.	..	No ..	Share—8 annas .. All other shares than that specified will be excluded from the sale.	Rakshya Krishna Sinha.	1,726 5 0	..	27 11 3
Police	Ditto ..	..	No ..	Ditto ..	Ditto ..	13 3 4	..	1 1 8
2779/ Ejmali.	Taraf Kanaipur, pargana Asadnagar.	..	No ..	Share—8 annas .. All other shares than that specified will be excluded from the sale.	Dharani Kumar Ghose and others.	592 14 6	..	68 4 8
2779/1	Ditto ..	..	No ..	Share—8 annas, .. All other shares than that specified will be excluded from the sale.	Ditto ..	592 14 7	..	68 4 9
2785	Taraf Ifazinagar, pargana Asadnagar.	662 15 3	Yes ..	..	Saradindu Ganguli, as receiver, Dangapara estate.	..	79 6 3	..
3010	Bharwan, pargana Kutabpur.	700 12 10	Yes ..	..	Hari Das Mukherjee and others.	..	66 2 2	..

The abovementioned estates are being advertised for sale for instalments which were due on or before 30th Jaistha, 1338 B. S., of which the last date of payment was in the next Bengali month of Ashar, 1338 B. S.

Berhampore, the 20th August 1931. S. E. HASSAN, *for* Collector.

Notification A.

NOTICE is hereby given, under sections 6 and 13, Act XI of 1859, that the undermentioned estate and shares of estate in the district of Rangpur will be put up for sale at the office of the Collector of that district on 20th September 1931, at 11 a. m., for arrears of revenue and other demands which by law are realizable as arrears of land revenue.

When in columns 5, 7 and 9 of the following statement it is stated that only a share is to be sold, it is to be understood that a separate account is kept for that share :—

Tauzi No.	Name of mahal and pargana.	Sadar jama of whole estate.	Whether the whole estate is to be sold.	If a share is to be sold, specification of such share or shares.	Names of proprietors of property to be sold.	If only a share is to be sold, the sadar jama of such share.	If the whole estate is to be sold, the arrears due from it.	If only a share is to be sold, the arrears due from it.
1	2	3	4	5	6	7	8	9
		Rs. A. P.				Rs. A. P.		Rs. A. P.
693-5	Babanpur, pargana Babanpur.	5,289 1 5	No ..	3 as. 14 g. 2k. 2 kt. 1½ danti 3 kag share of the entire estate. All other shares besides that specified will be excluded from the sale.	Khitish Chandra Roy Choudhury and Jatindra Nath Roy Choudhury.	1,237 5 3	..	100 0 0

This estate is being advertised for sale for instalments of revenue which were due on or before the 30th Jaistha, 1338 B. S. of which the latest date of payment was the 28th June 1931.

Rangpur, the 15th August 1931. T. M. Dow, Collector.

Notification A.

NOTICE is hereby given, under section 6, Act XI of 1859, that the undermentioned estate and shares of estate in the district of Rangpur will be put up for sale at the office of the Collector of that district on the 26th September 1931, at 11 a.m., for arrears of revenue and other demands which by law are realizable as arrears of land revenue :—

Tauzi No.	Name of mahal and pargana.	Sadar jama of whole estate.	Whether the whole estate is to be sold.	If a share is to be sold, specification of such share or shares.	Names of proprietors of property to be sold.	If only a share is to be sold, the sadar jama of such share.	If the whole estate is to be sold, the arrears due from it.	If only a share is to be sold, the arrears due from it.
1	2	3	4	5	6	7	8	9
		Rs. A. P.					Rs. A. P.	
20	Manthana hisya 8 annas, pargana Manthana.	11,965 10 2	Whole ..	16 annas	Raja Gopal Lal Roy Bahadur.	....	1,235 10 6	....

This estate is being advertised for sale for instalments of revenue which were due on or before the 30th Jaistha, 1338 B. S., of which the latest date of payment was 28th June 1931.

Rangpur, the 15th August 1931. T. M. Dow, Collector.

Notification A.

NOTICE is hereby given, under section 6, Act XI of 1859, that the undermentioned estate and shares of estate in the district of Rangpur will be put up for sale at the office of the Collector of that district on the 26th September 1931, at 11 a.m., for arrears of revenue and other demands which by law are realizable as arrears of land revenue :—

Tauzi No.	Name of mahal and pargana.	Sadar jama of whole estate.	Whether the whole estate is to be sold.	If a share is to be sold, specification of such share or shares.	Names of proprietors of property to be sold.	If only a share is to be sold, the sadar jama of such share.	If the whole estate is to be sold, the arrears due from it.	If only a share is to be sold, the arrears due from it.
1	2	3	4	5	6	7	8	9
		Rs. A. P.					Rs. A. P.	
77	Magura O'gayraha, Chakley Kazirhat, Fatepur.	9,056 11 0	Whole ..	16 annas	Raja Gopal Lal Roy Bahadur.	..	927 15 9	....

This estate is being advertised for sale for instalments of revenue which were due on or before the 30th Jaistha, 1338 B. S., of which the latest date of payment was 28th June 1931.

Rangpur, the 15th August 1931. T. M. Dow, Collector.

Notification A.

NOTICE is hereby given, under section 6, Act XI of 1859, that the undermentioned estate and shares of estate in the district of Rangpur will be put up for sale at the office of the Collector of that district on the 26th September 1931, at 11 a.m., for arrears of revenue and other demands which by law are realizable as arrears of land revenue :—

Tauzi No.	Name of mahal and pargana.	Sadar jama of whole estate.	Whether the whole estate is to be sold.	If a share is to be sold, specification of such share or shares.	Names of proprietors of property to be sold.	If only a share is to be sold, the sadar jama of such share.	If the whole estate is to be sold, the arrears due from it.	If only a share is to be sold, the arrears due from it.
1	2	3	4	5	6	7	8	9
		Rs. A. P.					Rs. A. P.	
82	Musa Poalghat O'gayraha, pargana Chakley Kazirhat.	6,408 5 4	Whole	16 annas ..	Raja Gopal Lal Roy Bahadur.	..	667 8 7	..

This estate is being advertised for sale for instalments of revenue which were due on or before the 30th Jaistha, 1338 B. S., of which the latest date of payment was 28th June 1931.

Rangpur, the 15th August 1931. T. M. Dow, Collector.

Notification A.

NOTICE is hereby given, under section 6, Act XI of 1859, that the undermentioned estate and shares of estate in the district of Rangpur will be put up for sale at the office of the Collector of that district on 26th September 1931, at 11 a.m., for arrears of revenue and other demands which by law are realizable as arrears of land revenue :—

Tauzi No.	Name of mahal and pargana.	Sadar jama of whole estate.	Whether the whole estate is to be sold.	If a share is to be sold, specification of such share or shares.	Names of proprietors of property to be sold.	If only a share is to be sold, the sadar jama of such share.	If the whole estate is to be sold, the arrears due from it.	If only a share is to be sold, the arrears due from it.
1	2	3	4	5	6	7	8	9
		Rs. A. P.					Rs. A. P.	
185	Kunja Sakpala hisya 8 annas, pargana Alihat, Kunja-Sakpala, Bairi-Ghoraghat, Pagall.	5,181 10 2	Whole	16 annas ..	Raja Gopal Lal Roy Bahadur.	..	180 7 10	..

This estate is being advertised for sale for instalments of revenue which were due on or before the 30th Jaistha, 1338 B. S., of which the latest date of payment was 28th June 1931.

Rangpur, the 15th August 1931. T. M. Dow, Collector.

Notification A.

NOTICE is hereby given under section 6, Act XI of 1859, that the undermentioned estate and shares of estate in the district of Rangpur will be put up for sale at the office of the Collector of that district on 26th September 1931, at 11 a. m., for arrears of revenue and other demands which by law are realizable as arrears of land revenue :—

Tauzi No.	Name of mahal and pargana.	Sadar jama of whole estate.	Whether the whole estate is to be sold.	If a share is to be sold, specification of such share or shares.	Names of proprietors of property to be sold.	If only a share is to be sold, the sadar jama of such share.	If the whole estate is to be sold, the arrears due from it.	If only a share is to be sold, the arrears due from it.
1	2	3	4	5	6	7	8	9
		Rs. A. P.					Rs. A. P.	
248	Radhakrishnapur O'gayraha mauza, pargana Andua.	9,839 5 1	Whole ..	16 annas ..	Raja Gopal Lal Roy Bahadur.	..	615 5 1	..

This estate is being advertised for sale for instalments of revenue which were due on or before the 30th Jaistha, 1338 B. S., of which the latest date of payment was 28th June 1931.

Rangpur, the 15th August 1931. T. M. Dow, Collector.

Notification A.

NOTICE is hereby given under section 6, Act XI of 1859, that the undermentioned estate and shares of estate in the district of Rangpur will be put up for sale at the office of the Collector of that district on 26th September 1931, at 11 a.m., for arrears of revenue and other demands which by law are realizable as arrears of land revenue :—

Tauzi No.	Name of mahal and pargana.	Sadar jama of whole estate.	Whether the whole estate is to be sold.	If a share is to be sold, specification of such share or shares.	Names of proprietors of property to be sold.	If only a share is to be sold, the sadar jama of such share.	If the whole estate is to be sold, the arrears due from it.	If only a share is to be sold, the arrears due from it.
1	2	3	4	5	6	7	8	9
		Rs. A. P.					Rs. A. P.	
506	Kunja Sakpala hisya 8 annas, pargana Alihat, Kunja Sakpala, Bairi-Ghoraghat, Pagall.	5,181 10 1	Whole	16 annas ..	Brindaban Chandra Roy Choudhury.	..	182 2 6	..

This estate is being advertised for sale for instalments of revenue which were due on or before the 30th Jaistha, 1338 B. S., of which the latest date of payment was 28th June 1931.

Rangpur, the 15th August 1931. T. M. Dow, Collector.

Notification A.

NOTICE is hereby given, under section 6, Act XI of 1859, that the undermentioned estate and shares of estate in the district of Rangpur will be put up for sale at the office of the Collector of that district on 26th September 1931, at 11 a. m., for arrears of revenue and other demands which by law are realizable as arrears of land revenue :—

Tauzi No.	Name of mahal and pargana.	Sadar jama of whole estate.	Whether the whole estate is to be sold.	If a share is to be sold, specification of such share or shares.	Names of proprietors of property to be sold.	If only a share is to be sold, the sadar jama of such share.	If the whole estate is to be sold, the arrears due from it.	If only a share is to be sold, the arrears due from it.
1	2	3	4	5	6	7	8	9
		Rs. A. P.					Rs. A. P.	
693	Babanpur, pargana Babanpur.	5,289 1 5	Whole ..	16 annas ..	Ram Ratan, Raghu Nandan, Nilratan Roy Chaudhury and others.	..	586 0 10	..

This estate is being advertised for sale for instalments of revenue which were due on or before the 30th Jaistha, 1338 B. S., of which the latest date of payment was 28th June 1931.

Rangpur, the 15th August 1931.

T. M. Dow, Collector.

Notification A.

NOTICE is hereby given, under sections 6 and 13, Act XI of 1859, that the undermentioned estate and shares of estate in the district of Rangpur will be put up for sale at the office of the Collector of that district on 26th September 1931, at 11 a.m., for arrears of revenue and other demands which by law are realizable as arrears of land revenue.

When in columns 5, 7 and 9 of the following statement it is stated that only a share is to be sold, it is to be understood that a separate account is kept for that share :—

Tauzi No.	Name of mahal and pargana.	Sadar jama of whole estate.	Whether the whole estate is to be sold.	If a share is to be sold, specification of such share or shares.	Names of proprietors of property to be sold.	If only a share is to be sold, the sadar jama of such share.	If the whole estate is to be sold, the arrears due from it.	If only a share is to be sold, the arrears due from it.
1	2	3	4	5	6	7	8	9
		Rs. A. P.				Rs. A. P.		Rs. A. P.
161 Residuary.	Kundi hisya 4 annas, pargana Kundi.	12,802 2 8	No ..	16 annas share of Alamnagar mauza in Group "A." 16 annas share of Basantapur and other mauzas in Group "B." 16 annas share of Ajodhyapur and other mauzas in Group "C." 8 annas share of Madhabpur kismat and other mauzas in Group "E." 16 annas share of Nurpur kismat mauza in Group "F." 16 annas share of Barabari Raghu kismat and other mauzas in Group "L." 16 annas share of Dighal-Tari and other mauzas in Group "M." 16 annas share of Barabari kismat and other mauzas in Group "N." All other shares besides that specified will be excluded from the sale.	Rai Mritunjoy Roy Choudhury Bahadur and others.	10,750 3 10	..	982 4 11

This estate is being advertised for sale for instalments of revenue which were due on or before the 30th Jaistha, 1338 B.S., of which the latest date of payment was 28th June 1931.

Rangpur, the 15th August 1931.

T. M. Dow, Collector.

Notification A.

NOTICE is hereby given, under sections 6 and 13, Act XI of 1859, that the undermentioned estate and shares of estate in the district of Rangpur will be put up for sale at the office of the Collector of that district on 26th September 1931, at 11 a.m., for arrears of revenue and other demands which by law are realizable as arrears of land revenue.

When in columns 5, 7 and 9 of the following statement it is stated that only a share is to be sold, it is to be understood that a separate account is kept for that share :—

Tauzi No.	Name of mahal and pargana.	Sadar jama of whole estate.	Whether the whole estate is to be sold.	If only a share is to be sold, specification of such share or shares.	Names of proprietors of property to be sold.	If only a share is to be sold, the sadar jama of such share.	If the whole estate is to be sold, the arrears due from it.	If only a share is to be sold, the arrears due from it.
1	2	3	4	5	6	7	8	9
		Rs. A. P.				Rs. A. P.		Rs. A. P.
224 Residuary.	Batasan O'gayraha, pargana Batasan.	[illegible] 7 7	No ..	16 annas share of Abhirampur and other mauzas in Group "A." 16 annas share of Atpania and other mauzas (in pargana Shaghata) in Group "B." 8 annas share of Akbarpur and other mauzas (pargana Bagdhar) in Group "C." 8 annas share of Durgamati and other mauzas in Group "D." 8 annas share of Raghunathpur and other mauzas in Group "E." All other shares besides that specified will be excluded from the sale.	Bonwari, Mukunda Das, Nandi Deb and another.	30,232 6 2	..	446 3 0

This estate is being advertised for sale for instalments of revenue which were due on or before the 30th Jaistha, 1338 B. S., of which the latest date of payment was 28th June 1931.

Rangpur, the 15th August 1931.

T. M. Dow, Collector.

Notification A.

NOTICE is hereby given, under sections 6 and 13, Act XI of 1859, that the undermentioned estate and shares of estate in the district of Rangpur will be put up for sale at the office of the Collector of that district on 26th September 1931, at 11 a. m., for arrears of revenue and other demands which by law are realizable as arrears of land revenue.

When in columns 5, 7 and 9 of the following statement it is stated that only a share is to be sold, it is to be understood that a separate account is kept for that share :—

Tauzi No.	Name of mahal and pargana.	Sadar jama of whole estate.	Whether the whole estate is to be sold.	If a share is to be sold, specification of such share or shares.	Names of proprietors of property to be sold.	If only a share is to be sold, the sadar jama of such share.	If the whole estate is to be sold, the arrears due from it.	If only a share is to be sold, the arrears due from it.
1	2	3	4	5	6	7	8	9
		Rs. A. P.				Rs. A. P.		Rs. A. P.
265-11	Chapra O'gayraha mauza, pargana Chakley Kazirhat, Fatehpur Boda Purbabhag, Kakina Basatti Udashi.	8,036 8 10	No ..	16 annas share of Ram Dakun mauza in Group "F." All other shares besides that specified will be excluded from the sale.	Raja Gopal Lal Roy Bahadur.	634 2 0	..	66 4 8

This estate is being advertised for sale for instalments of revenue which were due on or before the 30th Jaistha, 1338 B. S., of which the latest date of payment was the 28th June 1931.

Rangpur, the 15th August 1931.

T. M. Dow, Collector.

Notification A.

NOTICE is hereby given, under sections 6 and 13, Act XI of 1859, that the undermentioned estate and shares of estate in the district of Rangpur will be put up for sale at the office of the Collector of that district on 26th September 1931, at 11 a. m., for arrears of revenue and other demands which by law are realizable as arrears of land revenue.

When in columns 5, 7 and 9 of the following statement it is stated that only a share is to be sold, it is to be understood that a separate account is kept for that share :—

Tauzi No.	Name of mahal and pargana.	Sadar jama of whole estate.	Whether the whole estate is to be sold.	If a share is to be sold, specification of such share or shares.	Names of proprietors of property to be sold.	If only a share is to be sold, the sadar jama of such share.	If the whole estate is to be sold, the arrears due from it.	If only a share is to be sold, the arrears due from it.
1	2	3	4	5	6	7	8	9
		Rs. A. P.				Rs. A. P.		Rs. A. P.
693 Residuary.	Babanpur, pargana Babanpur.	5,289 1 5	No ..	3 as. 12 gds. 2 k. 11 kag share of the entire mahal. All other shares besides that specified will be excluded from the sale.	Raghunath Roy Choudhuri and others.	1,300 7 7	..	138 7 7

This estate is being advertised for sale for instalments of revenue which were due on or before the 30th Jaistha 1338 B. S. of which the latest date of payment was the 28th June 1931.

Rangpur, the 13th August 1931. T. M. Dow, Collector.

Notification A.

NOTICE is hereby given, under sections 6 and 13, Act XI of 1859, that the undermentioned estate and shares of estate in the district of Rangpur will be put up for sale at the office of the Collector of that district on 26th September 1931, at 11 a. m., for arrears of revenue and other demands which by law are realizable as arrears of land revenue.

When in columns 5, 7 and 9 of the following statement it is stated that only a share is to be sold, it is to be understood that a separate account is kept for that share :—

Tauzi No.	Name of mahal and pargana.	Sadar jama of whole estate.	Whether the whole estate is to be sold.	If a share is to be sold, specification of such share or shares.	Names of proprietors of property to be sold.	If only a share is to be sold, the sadar jama of such share.	If the whole estate is to be sold, the arrears due from it.	If only a share is to be sold, the arrears due from it.
1	2	3	4	5	6	7	8	9
		Rs. A. P.				Rs. A. P.		Rs. A. P.
693-3	Babanpur, pargana Babanpur.	5,289 1 5	No ..	1 a. 12 gds. 2 kara share of the entire mahal. All other shares besides that specified will be excluded from the sale.	Jogendra Nath Mukherjee and Mahammad Hossain Talukdar.	537 2 9	..	48 14 3

This estate is being advertised for sale for instalments of revenue which were due on or before the 30th Jaistha 1338 B. S. of which the latest date of payment was the 28th June 1931.

Rangpur, the 15th August 1931. T. M. Dow, Collector.

Notification A.

NOTICE is hereby given, under sections 6 and 13, Act XI of 1859, that the undermentioned estate and shares of estate in the district of Rangpur will be put up for sale at the office of the Collector of that district on 26th September 1931, at 11 a.m., for arrears of revenue and other demands which by law are realizable as arrears of land revenue.

When in columns 5, 7 and 9 of the following statement it is stated that only a share is to be sold, it is to be understood that a separate account is kept for that share :—

Tauzi No.	Name of mahal and pargana.	Sadar jama of whole estate.	Whether the whole estate is to be sold.	If a share is to be sold, specification of such share or shares.	Names of proprietors of property to be sold.	If only a share is to be sold, the sadar jama of such share.	If the whole estate is to be sold, the arrears due from it.	If only a share is to be sold, the arrears due from it.
1	2	3	4	5	6	7	8	9
		Rs. A. P.				Rs. A. P.		Rs. A. P.
693-1	Babanpur, pargana Babanpur.	5,289 1 5	No ..	2 annas 2 gandas share of the entire mahal. All other shares besides that specified will be excluded from the sale.	Jagadish Chandra Roy Choudhury.	694 5 3	..	126 9 0

This estate is being advertised for sale for instalments of revenue which were due on or before the 30th Jaistha of which the latest date of payment was the 28th June 1931.

Rangpur, the 15th August 1931. T. M. Dow, Collector.

Notification A.

NOTICE is hereby given, under sections 6 and 13, Act XI of 1859, that the undermentioned estate and shares of estate in the district of Rangpur will be put up for sale at the office of the Collector of that district on 26th September 1931, at 11 a.m., for arrears of revenue and other demands which by law are realizable as arrears of land revenue.

When in columns 5, 7 and 9 of the following statement it is stated that only a share is to be sold, it is to be understood that a separate account is kept for that share :—

Tauzi No.	Name of mahal and pargana.	Sadar jama of whole estate.	Whether the whole estate is to be sold.	If a share is to be sold, specification of such share or shares.	Names of proprietors of property to be sold.	If only a share is to be sold, the sadar jama of such share.	If the whole estate is to be sold, the arrears due from it.	If only a share is to be sold, the arrears due from it.
1	2	3	4	5	6	7	8	9
		Rs. A. P.				Rs. A. P.		Rs. A. P.
693-4	Babanpur, pargana Babanpur	5,289 1 5	No ..	4 annas 18 gandas share of the entire mahal. All other shares besides that specified will be excluded from the sale.	Kalikesh Chandra Chatterjee.	1,619 12 7	..	294 9 8

This estate is being advertised for sale for instalments of revenue which were due on or before the 30th Jaistha of which the latest date of payment was the 28th June 1931.

Rangpur, the 15th August 1931. T. M. Dow, Collector.

Notification A.

NOTICE is hereby given, under sections 6 and 13, Act XI of 1859, that the undermentioned estate and shares of estate in the district of Rangpur will be put up for sale at the office of the Collector of that district on 26th September 1931, at 11 a.m., for arrears of revenue and other demands which by law are realizable as arrears of land revenue.

When in columns 5, 7 and 9 of the following statement it is stated that only a share is to be sold, it is to be understood that a separate account is kept for that share :—

Tauzi No.	Name of mahal and pargana.	Sadar jama of whole estate.	Whether the whole estate is to be sold.	If a share is to be sold, specification of such share or shares.	Names of proprietors of property to be sold.	If only a share is to be sold, the sadar jama of such share.	If the whole estate is to be sold, the arrears due from it.	If only a share is to be sold, the arrears due from it.
1	2	3	4	5	6	7	8	9
		Rs. A. P.				Rs. A. P.		Rs. A. P.
42-2	Kazirhat hisya 4 annas, pargana Chakley Kazirhat.	10,435 6 4	No ..	2 annas share in mauza Bagulagari in Group "A." 2 annas share of mauza Pochapukur kismat in Group "B." 2 annas share of mauza Mathana kismat in Group "C." 2 annas share of mauza Porarkuthi kismat in Group "D." 2 annas share of mauza Khutamara taluk in Group "E." 2 annas share of mauza Madatinagar in Group "F." All other shares besides that specified will be excluded from the sale.	Nanda Kishore Lala and others	1,304 6 10	..	136 15 4

This estate is being advertised for sale for instalments of revenue which were due on or before the 30th Jaistha 1338 B. S. of which the latest date of payment was 28th June 1931.

Rangpur, the 15th August 1931. T. M. Dow, Collector.

Notification A.

NOTICE is hereby given, under sections 6 and 13, Act XI of 1859, that the undermentioned estates and shares of estates in the district of Hooghly will be put up for sale at the office of the Collector of that district on the 24th September 1931, at 12 noon, for arrears of revenue.

When in columns 5, 7 and 9 of the following statement it is stated that only a share is to be sold, it is to be understood that a separate account is kept for that share :—

Tauzi number.	Name of mahal and pargana.	Sadar jama of whole estate.	Whether the whole estate is to be sold.	If only a share is to be sold, specification of such share or shares.	Names of proprietors of property to be sold.	If only a share is to be sold, the sadar jama of such share.	If the whole estate is to be sold, the arrears due from it.	If only a share is to be sold, the arrears due from it.
1	2	3	4	5	6	7	8	9
		Rs. A. P.				Rs. A. P.	Rs. A. P.	Rs. A. P.
37	Hridayrampur, pargana Chowmahla.	44,825 0 7	..	12 gandas share ..	Hemendra Lal Ray Chowdhury and others.	1,657 14 0	..	757 14 0
3								
47	Sanchitara, pargana Pandua.	47,385 11 11	..	8 annas share of mauzas Jattrasiddhi, Jattrasiddhi *alias* new char, Balikismat Balichora, Kharija Osmanpur, Dumurdaha and char Madhusudanpur; 16 annas share of mauzas Saleswarpur, Haripur, Binodepur, Ekloki, Kismat Ekloki, Jamein Barijhatti, Patul, Khariji Khanpur, Daulatpur, Ramchandrapur Chakran, Kumdhara Mathurkur, Kirtinagore, Payan, Akutipota, Jotekusal, Rampur, Manpara, Ascharyapur, Dakshinpara Mahanad, Kagchipara, Rahimpurpara, Khariji proja of Radhakrishna Neogy, Salukgore, Kantalpara, Ghosepur, Ramanathpur Ramnathpur, Sunea, Duttapati, Serajabad *alias* Mayapur, Duttabati, Sarkerpati, Baluhatty, Baluhatthat Chandni, Bhaskur, Chak Gokulpur, Hat Chandni, Kristojote, Chaitpur, Panchdewli, Depaldighi, Balaldighi, Ramakantopur, Neali, Fatepur, Kristochandrapur, Lakshikantopur, Madanbati, Panchlol, Srimantapur Rosena, Rampur *alias* Sahasar Rampur, Dehatti *alias* Sreemukbatti, Paranchepole, Palkpara, Lalitagori, Ramchandrapur, Brindaban Chak, Chongdarbandh, Naricha and Kusaljote.	Abani Nath Mookerjee.	23,764 14 7	..	3,022 3 11
72	Gopalnagore, pargana Jehanabad.	2,917 11 2	..	8 as. 6 g. 2 c. 2 kt. ..	Nalinakshya Mittra and others.	1,519 10 5	..	198 7 9
72B	Ditto ..	2,917 11 2	..	4 as. 3 g. 1 c. 1 kt. ..	Ditto ..	759 13 0	..	99 4 3
93	Srirampur, pargana Habeli.	2,971 1 11	..	7 as. 4 g. ..	Nirode Baran Ray and others.	1,322 2 6	..	28 15 1
127	Selampur Kismat, pargana Selampur.	776 15 6	..	15 as. 12 g. 3 c. 1 kr. 18 til	Surendra Nath Ghosal and others.	759 11 3	..	3 10 0
140	Radhanagore, pargana Khosalpur.	8,101 14 0	Whole	..	Hemendra Sinha and others.	..	103 6 4	..
4082	Kalupukhuria, pargana Jehanabad.	18,518 0 0	..	2 as. 13 g. 1 c. 1 kt. share of mauzas Ghesua and Basantapur; 1 a. 13 g. share of Joykristopur; 15 g. 3 c. 2 dt. share of Ghosepur.	Ratan Krishna Ray and others.	863 13 2	..	64 12 3
4082 B	Ditto ..	18,518 0 0	..	2 as. 13 g. 1 c. 1 kt. share of mauzas Kalupukhuria, Ghesua, Ghosepur, Debkhanda, Basantapur, Mamudpur and kismat Jaykristopur.	Nakur Chandra Ray and others.	2,253 2 6	..	296 4 5
4082 1	Ditto ..	18,518 0 0	..	2 as. 13 g. 1 c. 1 kt. share of mauzas Kalupukhuria, Debkhanda and Mamudpur.	Srimati Giribala Dassi.	544 0 0	..	71 8 9

All other shares than that specified will be excluded from the sale.

Temporarily-settled estates (settled with proprietors for 15 years from 1st April 1922).

2025	Rampur char, pargana Raipur.	858 0 0	Whole	..	Bepin Behari Mazumdar, Receiver to the estate of Brindaban Chandra Thakur of Guptipara.	..	214 8 0	..
2027	Kristobatty new char, pargana Raipur.	2,105 0 0	Do.	..	Ditto ..	..	1,578 12 0	..
2035	Kristobatty char, pargana Raipur.	1,639 0 0	Do.	..	Ditto ..	..	1,229 4 0	..

The estates are being advertised for sale for instalments of revenue which were due on or before the 30th Jaistha 133 of which the latest date of payment was the 28th June 1931.

Chinsura, the 22nd August 1931.

G. C. MAZUMDAR, *for* Collector.

Notification A.

NOTICE is hereby given, under sections 6 and 13 of Act XI of 1859, that the undermentioned estates and shares of estates in the district of Birbhum will be put up for sale at the office of the Collector of that district on the 26th September 1931, at 12 noon, for arrears of revenue and other demands which by law are realizable as arrears of land revenue.

When in columns 5, 7 and 9 of the following statement it is stated that only a share is to be sold, it is to be understood that a separate account is kept for that share :—

Tauzi number.	Name of mahal and pargana.	Sadar jama of whole estate.	Whether the whole estate is to be sold.	If only a share is to be sold, specification of such share or shares.	Names of proprietors of property to be sold	If only a share is to be sold, the sadar jama of such share.	If the whole estate is to be sold, the arrears due from it.	If only a share is to be sold, the arrears due from it.
1	2	3	4	5	6	7	8	9
		Rs. A. P.				Rs. A. P.		Rs. A. P.
4	Senbhum, pargana Senbhum.	41,132 10 0	..	16 annas share of mauza Adityapur and 6 others ; 7 a. 8 gd. 2 kranti share of mauzas Nachansa, Hiragaunj chak and Sadipur ; 6 a. 13 gd. 1 c. 1 kr. share of Gidhgram ; 2 a. 4 gd. 1 c. 2 kr. 1 danti share of Jungle Chowpahari Jungle Kati, Anandabazar ; 2 a. 12 gd. 1 c. 1 kr. share of Raipur and 2 a. 13 gd. 3 c. 2½ danti share of mauza Radhanagar *alias* Adampur in residuary share excepting separate account Nos. 1 to 21 of the estate. All other shares than that specified will be excluded from the sale.	Sourindra Narayan Sinha and others.	2,017 6 8	..	459 5 11
4	Ditto ..	41,132 10 0	..	8 annas share of mauzas Khirai *alias* Kerai, Chowsondal, Chhatarbandi, Prosadpur and Bainchi chak and Hansra in separate account No. 1. All other shares than that specified will be excluded from the sale.	Pramila Bala Debi and others.	849 0 8	..	27 3 6
4	Ditto ..	41,132 10 0	..	16 annas share of mauzas Udaypur and 54 others ; 5 a. 6 gd. 2 c. 2 kranti share of mauzas Jungle Chowpahari Jungle Kati, Anandabazar, Lalagaunj, Nowagram Mal Jungle Chowpahari, Raipur and Radhanagar *alias* Adampur in separate account No. 3. All other shares than that specified will be excluded from the sale.	Subhasini Dasi	15,577 2 6	..	900 0 0
4	Ditto ..	41,132 10 0	..	16 annas share of mauzas Achhalpara and 16 others; 1 a. 15 gd. 2 cara 2 danti share of mauzas Jungle Chowpahari Jungle Kati, Anandabazar, Lalagaunj, Raipur and Radhanagar *alias* Adampur ; 4 a. 16 gd. share of Hariharpur *alias* Mukunda in separate account No. 12. All other shares than that specified will be excluded from the sale.	Sarala Bala Sinha.	5,273 0 0	..	465 5 6
4	Ditto ..	41,132 10 0	..	8 annas share of mauzas Kherai *alias* Kerai and 5 others ; 1 a. 15 gd. 2 c. 2 danti share of Jungle Chowpahari Jungle Kati, Anandabazar, Lalagaunj, Raipur and Radhanagar *alias* Adampur; 5 a. 2 gd. 2 cara share of Hariharpur *alias* Mukunda and 16 annas share of Maldipur in separate account No. 20. All other shares than that specified will be excluded from the sale.	Atul Chandra Ghosh and others.	1,882 4 4	..	108 1 4
16	Moheswarpur, pargana Senbhum.	12,897 8 7	..	16 annas share of mauzas Binandapur and 5 others; 5 a. 6 gd. 2 c. 2 kr. share of Khadempuskarini and 6 others in residuary share excepting separate account Nos. 1 to 9. All other shares than that specified will be excluded from the sale.	Sourindra Narayan Sinha and others.	700 15 6	..	115 14 7

Tauzi number.	Name of mahal and pargana	Sadar jama of whole estate	Whether the whole estate is to be sold	If only a share is to be sold, specification of such share or shares	Names of proprietors of property to be sold	If only a share is to be sold the sadar jama of such share	If the whole estate is to be sold, the arrears due from it	If only a share is to be sold, the arrears due from it
1	2	3	4	5	6	7	8	9
		Rs A P				Rs A P	Rs A P	Rs A P
17	Kagas, pargana Moureswar Sabek	17,174 0 8	..	15 gd 2 cara 2 danti share of mauzas Amdapara chak and 54 others, 1 gd 1 c. 2 kr 1½ danti share of mauzas Banara and Bahadurganj in separate account No. 28. All other shares than that specified will be excluded from the sale	Swet Barani Debi and others	677 0 4	.	66 14 10
18	Kalikapur Krishnanagar, pargana Jaimujal	6,234 7 0	Whole estate 16 annas share	..	Syama Sundari Debi and others	..	616 12 9	..
19	Kuniara, pargana Ichhapakhuria	5,695 14 0	..	2 a 2 gd 8 danti share of mauzas Ulkunda and 9 others; 8 a. 17 gd 8 danti share of Golera, 3 a 15 gd. 3 cara 8 danti share of Gatinathpur and 7 others; 2 a 13 gd 1 c. 2 kr 2 kag share of Darka nijjote Syamacharan Mukherjee and 8k Delwar, *i.e.*, Kharija Darka and Mirband; 10 a. 9 gd 2 c. 5½ danti share of Babarpur, 5 a 3 gd 1 c. 2 kr 2 kag share of Haripur in residuary share excepting separate account Nos. 1 to 13. All other shares than that specified will be excluded from the sale.	Kalikumar Banerji and others.	1,213 14 4	..	321 4 4
20	Panchpara, pargana Ichhapakhuria.	4,062 5 0	..	3 annas share in separate account No. 1. All other shares than that specified will be excluded from the sale	Mriganayani Debi and others	761 11 0	..	48 11 3
21	Batta, pargana Jaimujal	10,852 12 0	..	6 annas share of mauzas Ulandi and 10 others, 9 a. 14 gd. share of Gunsima and 11 others in residuary share excepting separate account Nos. 1 to 6. All other shares than that specified will be excluded from the sale.	Harihar Nath Das and others	3,357 0 7	..	184 0 6
25	Indus, pargana Kutabpur	5,687 2 8	..	2 a 13 gd. 1 c. 1 kr. share in residuary share excepting separate account Nos. 1 to 7. All other shares than that specified will be excluded from the sale.	Kalikumar Banerji and others	947 8 0	..	49 11 10
74	Kirtihat, pargana Khargram.	2,222 13 0	..	2 annas share of mauza Kalyanpur, 5 a. 1 g 2 cara 2½ danti 1 dip of Kalsi Kismat; 4 a. 19 gd. 2½ danti 1 dip of Akuni *alias* Akundi, Keobat, Kirtihat, Keededanga *alias* Kesia, Gidhila, Gaidharpur and Parbatipur; 5 a 4 gd. 3 cara 2½ danti share of Barua *alias* Hatchala, 4 a. 11 gd. 3 c. 6½ danti 1 dip share of Kankhra Kist, Kanta dighi, Goalipara, Chandrahat, Jugsara, Tilpara, Nowapara, Fatehjangpur, Baulpara, Mirzapur and Sultanpur; 1 a. 19 gd. 3 c. 8½ danti 1½ kara of a danti share of Kesabbati; 4 a. 1 cara ½ danti 1 dip of Kasiara and Kurumba; 4 a. 3 gd. 3 cara ½ danti of Jokatya and Dongra; 1 a. 6 gd. 1 cara share of Ramnagar; 8 a. 10 gd. 1 c. 3 kag 2½ danti of Raghabpur, Sekampur and Subalpur; 8 a. 7 gd. 3 kag 2½ danti 1 dip of Purano Mohugram and 4 annas share of Khalil Rahoman in residuary share excepting separate account Nos. 1 to 11. All other shares than that specified will be excluded from the sale.	Ram Ranjan Hati and others.	543 10 2	..	39 1 5

Tauzi number.	Name of mahal and pargana.	Sadar jama of whole estate.	Whether the whole estate is to be sold.	If only a share is to be sold, specification of such share or shares.	Names of proprietors of property to be sold.	If only a share is to be sold, the sadar jama of such share.	If the whole estate is to be sold, the arrears due from it.	If only a share is to be sold, the arrears due from it.
1	2	3	4	5	6	7	8	9
		Rs. A. P.				Rs. A. P.	Rs. A. P.	Rs. A. P.
107	Punur, pargana Akbarshi.	1,176 13 0	..	7 a. 18 gd. 3 c. share in residuary excepting separate account Nos. 5 and 6. All other shares than that specified will be excluded from the sale.	Danuja Dalani Debi and others.	583 12 10	..	17 10 6
111	Raswan, pargana Barra.	4,173 14 1	..	5 a. 19 gd. 3 cara 1 kr. ½ danti share in residuary excepting separate account Nos. 1 to 6 and 8 to 11. All other shares than that specified will be excluded from the sale.	Maharaja Bahadur Sing and others.	1,562 14 2	..	6 7 1
114	Bongram, pargana Barbakaing.	2,526 4 0	..	3 a. 4 gd. share in residuary excepting separate account Nos. 1 to 10. All other shares than that specified will be excluded from the sale.	Prabhas Chandra Mitra (Sebait).	505 3 11	..	50 7 0
125	Kanutia, pargana Swarupsing.	1,640 6 0	Whole estate 16 annas share.	..	Gobinda Chandra Mazumder and others.	..	162 6 0	..
158	Kadipur, pargana Kutabpur.	851 4 0	Ditto	..	Srish Chandra Choudhury and others.	..	80 4 0	..
172	Majhigram, pargana Khatanga.	3,422 4 0	..	12 annas share in residuary excepting separate account No. 1. All other shares than that specified will be excluded from the sale.	Munshi Zillar Rohoman.	2,566 11 0	..	193 11 0
172	Ditto ..	3,422 4 0	..	4 annas share in separate account No. 1. All other shares than that specified will be excluded from the sale.	Munshi Zillar Rohoman and others.	855 0 0	..	24 2 6
212	Syambati Saspur, pargana Swarupsing.	1,176 13 0	..	11 a. 7 gd. 2 cara 2 danti share in residuary share excepting separate account No. 1. All other shares than that specified will be excluded from the sale.	Bidhu Bhusan Choudhury and others.	836 13 6	..	44 3 10
240	Damdama, pargana Alinagar.	1,482 11 0	..	6 a. 5 gd. share in mauzas Damdama and 10 others in separate account No. 1. All other shares than that specified will be excluded from the sale.	Sudhangsu Bhusan Ray and others.	579 2 10	..	42 10 6
999	Birori, pargana Nowanagar.	632 8 11	Whole estate 16 annas share.	..	Nritya Kali Dasya	..	7 7 10	..
1221	Belhatti, pargana Barbaksing.	2,218 0 7	Ditto	..	General Secretary to the Indian Theosophical Society through Dwarika Nath and Kashinath Talang.	..	24 8 3	..
1269	Huda Palkar, pargana Nowanagar.	2,490 3 0	..	6 annas share in residuary share excepting separate account Nos. 1 to 3. All other shares than that specified will be excluded from the sale.	Bhupendra Kumar Sarkar and others.	933 13 1	..	48 13 2

Suri, the 20th August 1931.

[ILLEGIBLE], *for* Collector.

Notification A.

NOTICE is hereby given, under sections 6 and 13, Act XI of 1859, that the undermentioned estates and shares of estates in the district of Pabna will be put up for sale at the office of the Collector of that district on the 26th September 1931, at 12 noon, for arrears of revenue and other demands which by law are realizable as arrears of land revenue.

When in columns 5, 7 and 9 of the following statement it is stated that only a share is to be sold, it is to be understood that a separate account is kept for that share :—

Tauzi No.	Name of mahal and pargana.	Sadar jama of whole estate.	Whether the whole estate is to be sold.	If only a share is to be sold, specification of such share or shares.	Names of proprietors of property to be sold.	If only a share is to be sold, the sadar jama of such share.	If the whole estate is to be sold, the arrears due from it.	If only a share is to be sold, the arrears due from it.
1	2	3	4	5	6	7	8	9
		Rs. A. P.				Rs. A. P.	Rs. A. P.	Rs. A. P.
1744	K. Char Suriber, pargana Ishapsahi.	1,323 0 0	Entire 16 as. share of Suriber Char, i.e., share of the estate.	..	Atul Chandra Bose, receiver to the estate of Mathura Nath, Janaki Nath and Jamini Nath Roy Chaudhury.	..	55 2 6	..
1	Dehi Bhadraghat, pargana Ishapsahi.	1,951 8 0	Entire 16 as. share of the estate.	..	Abani Nath Ganguly and others.	..	123 7 6	..
272	K. Gayashbari, pargana Sonabaju.	504 6 0	Entire 16 as. share of the estate.	..	Hemanta Kumar Saha and others.	..	124 12 6	..
175	Taraf Shyampur, pargana Amirabad.	3,156 9 0	..	Residuary share .. 4 as. 19 gd. 2 c. 1 dip share of the estate.	Surendra Krishna Datta and others.	981 13 0	..	183 3 9
175	Ditto ..	3,156 9 0	..	Separate account No. 4 3 as. 8 gd. 1 c. 9 dip share of the estate.	Purna Chandra Chaudhury.	676 7 0	..	54 11 0
161	Newly accreted Char Bhati Raghunathpur, pargana Birahimpur.	740 5 0	Entire 16 as. share of the estate.	..	Biraja Sankar Majumdar and others.	..	15 9 0	..
104	Pargana Islampur, pargana Islampur.	24,323 6 0	..	*Separate account No. 1 8 as. share of the estate.	Puranchand Nahatta and others.	12,163 6 4	..	1,971 3 4
2182	Dehi Kashipar, pargana Mehamanshahi.	3,659 12 0	..	*Separate account No. 1 4 as. share of the estate.	Radhica Mohan Munshi and others.	914 15 0	..	76 5 3
2182	Dehi Kashipar, pargana Mehamanshahi.	3,659 12 0	..	*Separate account No. 5 3 as. share of the estate.	Sachindra Nath Sanyal.	686 3 5	..	57 4 0 Police— 1 6 8
121	Dehi Fulbari, pargana Bajuraah Mahabbatpur.	778 6 10	Entire 16 as. share of the estate.	..	Raoshanara Khatun and another.	..	65 12 9	..

*All other shares than that specified will be excluded from the sale.

The above estates are advertised for sale for arrears of land revenue up to kist 30th Jaistha 1338 B. S., the last date of payment of which w 14th Ashar 1338 B. S.

Pabna, the 21st August 1931.

S. BANERJI, Collector.

Notification A.

NOTICE is hereby given, under sections 6 and 13, Act XI of 1859, that the undermentioned estates and shares of estates in the district of Dinajpur will be put up for sale at the office of the Collector of that district on the 26th September 1931, at 12 noon, for arrears of revenue and other demands which by law are realizable as arrears of land revenue.

When in columns 5, 7 and 9 of the following statement it is stated that only a share is to be sold, it is to be understood that a separate account is kept for that share :—

Touzi No.	Name of mahal and pargana.	Sadar jama of whole estate.	Whether the whole estate is to be sold.	If only a share is to be sold, specification of such share or shares.	Names of proprietors of property to be sold.	If only a share is to be sold, the sadar jama of such share.	If the whole estate is to be sold, the arrears due from it.	If only a share is to be sold, the arrears due from it.
1	2	3	4	5	6	7	8	9
		Rs. A. P.				Rs. A. P.	Rs. A. P.	Rs. A. P.
63	Mahal Tarpa Mathurapur (Mathurapur Tarppoy), pargana Tarpa Mathurapur.	7,647 0 9	Yes	..	Khitish Chandra Rai Chaudhuri and others.	..	502 10 8	..
65	Mahal Kholora, pargana Kholora.	18,001 12 5	No	6 as. 10 gds. Residuary share. All other shares, 9 as. 10 gds., shall be excluded from sale.	Girija Ballav Rai Chaudhury.	7,313 3 6	..	868 1 2
65	Ditto ..	18,001 12 5	No	9 as. 10 gds. Separate account No. 2. All other shares, 6 as. 10 gds., shall be excluded from sale.	Nagendra Behari Rai Chaudhury.	10,688 8 11	..	1,285 8 8
66	Mahal Hekandari, pargana Sashbir.	7,543 1 4	Yes	..	Maharaj Bahadur Singh and others.	..	341 8 7	..
76	Mahal Sankarpur, pargana Sontosh.	40,329 4 0	No	8 as. Residuary share. All other hsares, 8 as., shall be excluded from sale.	Maharaj Bahadur Sing Dugar, Trustee.	20,164 10 1	..	2,010 10 1
76	Ditto ..	40,329 4 0	No	2 as. 10 gds. Separate account No. 1. All other shares, 13 as. 10 gds., shall be excluded from sale.	Sarbomongola Debi	6,301 7 2	..	674 7 2
112	Mahal Palashbari, pargana Salbari.	7,824 10 9	Yes	..	Chaudhury Mahamed Amin and others.	..	317 11 3	..
117	Mahal Tajpur Kismat, pargana Tajpur.	12,013 11 0	Yes	..	Rani Rajnandini Saheba, executrix, and Surendra Nath Rai, executor of late Maharaj Kumar Bonwari Ananda Deb Bahadur's will.	..	(a) 7,656 15 2 (b) 798 11 0 8,455 10 2	..
180	Mahal Tepagaon, pargana Salbari.	6,531 2 0	Yes	..	Chaudhury Mahammod Amin and others.	..	319 14 5	..
182	Mahal Kashba Gobindanagar (Gobindanagar Kashba), pargana Salbari.	6,546 3 0	Yes	..	Ditto ..	..	319 2 6	..
184	Mahal Rajnagar, pargana Rajnagar.	5,191 10 11	Yes	..	Maharaj Bahadur Singh.	..	394 10 11	..
264	Mahal Mirjapur, pargana Gilahabari	6,893 14 4	Yes	..	Kumar Sarat Kumar Rai.	..	708 10 8	..
267	Mahal Bahamankunda, pargana Bahamarkunda.	17,018 4 0	No	10 as. Separate account No. 3. All other shares, 6 as., shall be excluded from sale.	Maharaj Kumar Gopal Lal Rai.	10,636 6 6	..	520 9 6
456	Mahal Gangaprasad, pargana Sashbir.	5,931 15 7	Yes	..	Nripendra Chandra Chaudhury and others.	..	619 13 1	..
462	Mahal Safanagar, pargana Kardaha.	7,637 8 0	Yes	..	Sayad Badruddja, and others.	..	636 8 6	..

(a) Arrear land revenue payable before 1st Chaitra, 1337 B. S.

(b) Arrear land revenue payable before 1st Ashar, 1338 B. S.

Dinajpur, the 22nd August 1931.

L. C. GUHA, Collector.

Notification A.

NOTICE is hereby given, under sections 6 and 13, Act XI of 1859, that the undermentioned estates and shares of estates in the district of Dinajpur will be put up for sale at the office of the Collector of that district on the 26th September 1931, at 12 noon, for arrears of revenue and other demands which by law are realizable as arrears of land revenue.

When in columns 5, 7 and 9 of the following statement it is stated that only a share is to be sold, it is to be understood that a separate account is kept for that share :—

Tauzi No.	Name of mahal and pargana.	Sadar jama of whole estate.	Whether the whole estate is to be sold.	If only a share is to be sold, specification of such share or shares.	Names of proprietors of property to be sold.	If only a share is to be sold, the sadar jama of such share.	If the whole estate is to be sold, the arrears due from it.	If only a share is to be sold, the arrears due from it.
1	2	3	4	5	6	7	8	9
		Rs. A. P.				Rs. A. P.	Rs. A. P.	Rs. A. P.
82	Mahal Joypur, pargana Deora.	1,475 9 11	No	12 as. residuary share. All other shares, 4 as., shall be excluded from sale.	Priyanath Maitra	1,106 11 5	..	79 3 5
52	Mahal Durgapur, pargana Kardaha.	6,472 5 7	No	2 as. 13 gds. 1 c. 1 kt. residuary share. All other shares, 13 as. 6gds. 3 c. 2 kt., shall be excluded from sale.	Bhabesh Chandra Banerjee and others.	1,078 11 8	..	89 11 8
52	Ditto ..	6,472 5 7	No	2 as. 13 gds. 1 c. 1 kt. Separate account No. 5. All other shares, 13 as. 6 gds. 2 c. 2 kt , shall be excluded from sale	Indumati Debi and others.	1,078 11 7	..	90 11 7
59	Mahal Uriapara, pargana Rajnagar.	4,625 4 11	No	13 as. residuary share All other shares, 3 as , shall be excluded from sale.	Niyamatulla Chaudhury, mutwalli.	3,758 0 11	..	273 0 11
59	Ditto ..	4,625 4 11	No	3 as. .. Separate account No. 1. All other shares, 13 as., shall be excluded from sale.	Ditto ..	867 4 0	..	63 4 0
85	Mahal Delwarpur, pargana Delwarpur.	8,879 2 0	No	5 as. 6 gds 2 c. 2 kt. residuary share. All other shares, 10 as 13 gds. 1 c. 1 kt., shall be excluded from sale.	Padmabati Dasi and others.	2,959 11 4	..	332 5 0
85	Ditto ..	8,879 2 0	No	2 as. 13 gds. 1 c. 1 kt. Separate account No. 3. All other shares, 13 as 6 gds. 2 c. 2 kt., shall be excluded from sale.	Bhaba Bhabini Dasi.	1,479 13 8	..	166 13 4
105	Mahal Ghoraband, pargana Delwarpur.	5,737 4 6	No	10 as 13 gds. 1 c. 1 kt residuary share. All other shares, 5 as. 6 gds. 2 c. 2 kt., shall be excluded from sale.	Janokinath Majumdar and others.	3,824 13 8	..	445 13 8
106	Mahal Surjapur, pargana Salbari.	5,478 11 0	No	8 as. residuary share. All other shares, 8 as , shall be excluded from sale.	Dudhkumari Debya Chaudhurani, guardian of minors Binode Behary Rai Chaudhury and others.	2,739 5 6	..	235 10 8
121	Mahal Raghabendrapur, pargana Sarhatta.	2,537 8 8	Yes	..	Maharaj Bahadur Sing.	..	258 8 8	..
124	Mahal Bhalukai, pargana Salbari.	565 1 10	Yes	..	Naresh Chandra Mallick and others.	..	68 1 6	..
127	Mahal Pukhari (Pukry), pargana Gilahabari.	1,696 12 8	Yes	..	Sailendra Nath Rai and others.	..	254 12 8	..
130	Mahal Charkhonda, pargana Gilahabari.	1,696 12 6	No	9 as. 12 gds. 2c. residuary share. All other shares, 6 as. 7 gds. 2 c., shall be excluded from sale.	Jadabial Chakraverty and others.	1,020 11 6	..	112 5 6
133	Mahal Palashi, pargana Gilahabari.	1,696 12 7	No	8 as. residuary share All other shares, 8 as., shall be excluded from sale.	Bhabesh Chandra Datta Chaudhury and others.	848 6 3	..	127 6 3
136	Mahal Chorkai, pargana Sarhatta.	1,702 0 10	Yes	..	Maharaj Bahadur Sing.	..	173 0 10	..

Tauzi No.	Name of mahal and pargana.	Sadar jama of whole estate.	Whether the whole estate is to be sold.	If only a share is to be sold, specification of such share or shares.	Names of proprietors of property to be sold.	If only a share is to be sold, the sadar jama of such share.	If the whole estate is to be sold, the arrears due from it.	If only a share is to be sold, the arrears due from it.
1	2	3	4	5	6	7	8	9
		Rs. A. P.				Rs. A. P.	Rs. A. P.	Rs. A. P.
137	Mahal Bahala, pargana Bijanagar.	4,832 0 0	No ..	2 as. 13 gds. 1 c. 1 kt. residuary share. All other shares, 13 as. 6 gds. 2c. 2 kt., shall be excluded from sale.	Bhabesh Chandra Bandopadhyay and others.	804 15 5	..	86 4 6
137	Ditto ..	4,832 0 0	No ..	2 as. 13 gds. 1 c. 1 kt. Separate account No. 5. All other shares, 13 as. 6 gds. 2 c. 2 kt., shall be excluded from sale.	Indumati Debi and others.	805 11 6	..	86 0 6
161	Mahal Ramdebpur, pargana Phulbari.	3,187 10 0	No .	5 as. Separate account No. 1. All other shares, 11 as., shall be excluded from sale.	Mahamed Hussen Talukdar as mutwalli.	990 4 3	..	103 14 3
169	Mahal Gochhatta, pargana Bajitpur.	7,155 8 0	No ..	5 as. 6 gds. 2 c. 2 kt. Separate account No. 3. All others hares, 10 as. 13 gds 1 c. 1 kt., shall be excluded from sale.	Surendra Nrarain Chaudhury.	2,385 2 8	..	248 2 8
178	Mahal Lashkara, pargana Salbari.	3,788 13 10	Yes ..	..	Chandhury Mahammad Amin and others.	..	137 3 2	..
181	Mahal Galahar, pargana Deora.	1,612 13 0	No ..	6 as. 8 p. residuary share. All other shares, 9 as. 4 pies, shall be excluded from sale.	Hara Chandra Das Deb Barman and others.	672 0 1	..	53 15 10
181	Ditto ..	1,612 13 0	No ..	5 as. 4 p. Separate account No. 2. All other shares, 10 as. 8 p., shall be excluded from sale.	Padma Kamini Debya, guardian of minors Chandra Shekhar Das Deb Barman and others.	537 9 8	..	49 9 7
189	Mahal Panchsala, pargana Bilnagar.	4,519 11 0	No ..	8 as. residuary share. All other shares, 8 as., shall be excluded from sale.	Brojo Dulal Dhar and others.	2,259 13 6	..	201 15 2
191	Mahal Shekhpura, pargana Rajnagar.	2,911 14 6	No ..	10 as residuary share. All other shares, 6 as., shall be excluded from sale.	Azimuddin Chaudhury and others.	1,819 15 1	..	190 15 1
197	Mahal Malancha, pargana Gilahabari.	3,349 7 3	Ye ..	..	Mohini Mohon Bandopadhyay and others.	..	197 8 1	..
198	Mahal Inatpur (Enaitpur), pargana Gilahabari.	1,745 3 6	No ..	7 as. 6 gds. 2 c. 2 kt. Separate account No. 3. All other shares, 8 as., 13 gds. 1 c. 1 k., shall be excluded from sale.	Barada Kanta Gangopadhyay and others.	799 14 3	..	84 14 0
208	Mahal Chakdapatty (Dapati Chak), pargana Sultanpur.	3,590 3 2	Yes ..	....	Maharaj Bahadur Sing.	..	373 3 2	..
209	Mahal Karai (Korol), pargana Gilahabari.	3,244 1 5	No ..	10 as. 13 gds. 1 c. 1 kt. residuary share. All other shares, 5 as. 6 gds. 2 c. 2 kt., shall be excluded from sale.	Osmanaddin Chaudhury and others.	2,162 11 7	..	241 11 7
219	Mahal Bondanga, pargana Monoshow.	5,377 9 3	No ..	8 as. residuary share .. All other shares, 8 as., shall be excluded from sale.	Brojo Dulal Dhar and others.	2,688 12 7	..	262 11 2
219	Ditto ..	5,377 9 3	No ..	8 as. .. Separate account No. 1. All other shares, 8 as., shall be excluded from sale.	Sourindra Narain Dhar and others.	2,688 12 8	..	262 12 8
227	Mahal Jote Bani (Banijote), pargana Sultanpur.	7,189 11 4	No ..	8 as. residuary share .. All other shares, 8 as., shall be excluded from sale.	Chandra Nath Chatterji.	3,594 13 8	..	372 13 8
227	Ditto ..	7,189 11 4	No ..	8 as. .. Separate account No. 1. All other shares, 8 as., shall be excluded from sale.	Surendra Nath Chattopadhyay.	3,594 13 8	..	372 13 8

Tauzi No.	Name of mahal and pargana.	Sadar jama of whole estate.	Whether the whole estate is to be sold.	If only a share is to be sold, specification of such share or shares.	Names of proprietors of property to be sold.	If only a share is to be sold, the sadar jama of such share.	If the whole estate is to be sold, the arrears due from it.	If only a share is to be sold, the arrears due from it.
1	2	3	4	5	6	7	8	9
		Rs. A. P.				Rs. A. P.	Rs. A. P.	Rs. A. P.
236	Mahal Surhar Manikar, pargana Surhar Manikar.	7,317 10 2	No ..	1 a. 6 gds. 2 c. 2 31/2040 kt. Separate account No. 2. All other shares, 14 as. 13 gds. 1 c. 2009/2040 kt., shall be excluded from sale.	Serajuddin Ahmed Chaudhury and others.	1,894 3 3	..	431 8 4
237	Mahal Daulatpur, pargana Rajnagar.	4,660 8 1	No ..	9 as. 7 gds. 2 c. residuary share. All other shares, 6 as. 12 gds. 2 c., shall be excluded from sale.	Niyamatulla Chaudhury, mutwalli.	2,730 12 3.	..	202 4 3
237	Ditto ..	4,660 8 1	No ..	2 as. .. Separate account No. 2 All other shares, 14 as., shall be excluded from sale.	Ditto ...	582 9 0	..	43 1 0
237	Ditto ..	4,660 8 1	No ..	4 as. 12 gds. 2 c. .. Separate account No. 5. All other shares, 11 as. 7 gds. 2 c., shall be excluded from sale.	Ditto ..	1,347 2 10	..	99 2 10
238	Mahal Sultanpur, pargana Sultanpur.	1,718 4 10	No ..	14 as. 19 gds. 3 c. 1 kt. 1½ dt. residuary share. All other shares, 1 a. 1 kt. 1½ dt., shall be excluded from sale.	Sailendra Nath Rai and others.	1,610 3 10	..	279 3 10
240	Mahal Haribangsapur, pargana Deora.	1,615 11 5	Yes ..	....	Jadav Lal Chakraverty.	..	168 9 6	..
254	Mahal Shibkristapur, pargana Phulbari.	3,474 5 0	No ..	4 as. .. Separate account No. 1. All other shares, 12 as., shall be excluded from sale.	Ashutosh Chakraverty and others.	868 9 3	..	66 15 9
256	Mahal Sindarhatta, pargana Gilahabari.	4,281 5 3	Yes ..	....	Kumar Sarat Kumar Rai.	..	434 5 3	..
263	Mahal Gobindapur, pargana Ghoraghat.	6,796 10 3	No ..	1 a. 4 p. share of Bainagar group of mauzas. Separate account No. 2. All other shares, 14 as. 8 p., of Bainagar group of mauzas shall be excluded from sale.	Shibendra Chandra Ghose and others.	513 2 5	..	(a) 181 1 5 (b) 51 8 4 232 9 9
263	Ditto ..	6,796 10 3	No ..	1 a. 4 p. share of Bainagar group of mauzas. Separate account No. 3. All other shares, 14 as. 8 p., of, Bainagar group of mauzas shall be excluded from sale.	Ditto ..	513 2 5	..	(a) 180 14 5 (b) 51 8 4 232 6 9
267	Mahal Bahamankunda, pargana Bahamankunda.	17,018 4 0	No ..	4 as. 2 gds 2 c. residuary share. All other shares, 11 as. 17 gds. 2 c., shall be excluded from sale.	Kali Kinkar Nag and others.	4,387 8 4	..	(a) 1,268 10 8 (b) 215 5 7 1,484 0 3
267	Ditto ..	17,018 4 0	No ..	1 a. 4 gds. 2 kt. .. Separate account No. 1. All other shares, 14 as. 11 gds. 3 c. 1 kt., shall be excluded from sale.	Mahamed Hossain Talukder, mutwalli.	1,285 3 8	..	63 3 8
271	Mahal Royail, pargana Khorail.	4,649 11 8	No ..	6 as. .. Separate account No. 1. All other shares, 10 as. shall be excluded from sale.	Chandra Nath Chattopadhyay and others.	1,743 10 5	..	182 10 5
271	Ditto ..	4,649 11 8	No ..	2 as. 10 gds. .. Separate account No. 4. All other shares, 13 as. 10 gds., shall be excluded from sale.	Kaimuddin Chaudhury and others.	726 8 4	..	(a) 347 5 6 (b) 77 10 10 425 0 4
273	Mahal Barakristopur (Kistopur Bara), pargana Mohoshow.	3,540 3 10	Yes ..	....	Naresh Chandra Mallick and others.	..	350 3 10	..
278	Mahal Debnathpur, pargana Deora.	3,275 10 0	No ..	7 as. 13 gds. 2 c. residuary share. All other shares, 8 as. 6 gds. 2 c., shall be excluded from sale.	Prafullamayee Debi and others.	1,570 7 1	..	130 7 1

(a) Arrear land revenue payable before 1st Chaitra 1337 B. S. (b) Arrear land revenue payable before 1st Asar 1338 B. S.

Tauzi No.	Name of mahal and pargana.	Sadar jama of whole estate.	Whether the whole estate is to be sold.	If only a share is to be sold, specification of such share or shares.	Names of proprietors of property to be sold.	If only a share is to be sold, the sadar jama of such share.	If the whole estate is to be sold, the arrears due from it.	If only a share is to be sold, the arrears due from it.
1	2	3	4	5	6	7	8	9
		Rs. A. P.				Rs. A. P.	Rs. A. P.	Rs. A. P.
320	Mahal Mollapara, pargana Bihinagar.	4,212 12 0	Yes	....	Sherajuddin Ahmed Chaudhury and others.	..	119 8 11	..
332	Mahal Dharmapur, pargana Salbari.	3,176 1 0	No ..	6 as. 6 gds. 3c. 2½ job . Separate account No. 1. All other shares, 9 as. 13 gds 2 kt 2 dt. ½ job, shall be excluded from sale.	Madhu Sudan Chaudhury.	1,258 3 0	..	123 1 0
332	Ditto ..	3,176 1 0	No ..	4 as. 8 gds. 3 c. 1 kt. 2 dt. 2½ job. Separate account No. 2. All other shares, 11 as. 11 gds. 1 kt. ½ job, shall be excluded from sale.	Ditto ..	882 8 3	..	90 1 7
332	Ditto ..	3,176 1 0	No ..	5 as. 4 gds. 1 c. 2 dt. 1 job. Separate account No 3. All other shares, 10 as. 15 gds. 2 c. 2kt. 2 job, shall be excluded from sale.	Ditto ..	1,035 5 9	..	104 10 9
336	Mahal Gunshi, pargana Sultanpur.	7,746 10 8	No ..	5 as 6 gds 2 c. 2 kt. residuary share. All other shares, 10 as. 13 gds. 1 c. 1 kt., shall be excluded from sale.	Narain Kumar Chaudhury and others	2,582 3 6	..	268 9 7
345	Mahal Raghabendrapur, pargana Fulbari.	3,079 15 0	No ..	12 as. residuary share. All other shares, 4 as., shall be excluded from sale.	Haripada Ghatak and others.	2,310 0 7	..	239 3 9
350	Mahal Bashbhanga, pargana Salbari.	1,419 1 0	Yes .	....	Chandi Prosad Chaudhury.	..	147 1 0	..
356	Mahal Mahadebpur, pargana Bhuihara.	1,619 11 0	Yes ..	....	Joggeswar Sarker and others.	..	60 10 4	..
358	Mahal Ranipur, pargana Rajnagar.	581 4 0	Yes ..	....	Joynul Haq Chaudhury and others.	..	112 9 0	..
404	Mahal Haragobindapur, pargana Gilahabari.	3,349 7 4	No ..	6 as. 10 gds. 1 kt. 2½ dt. residuary share. All other shares, 9 as. 9 gds. 3 cr. 1 kt. ½dt., shall be excluded from sale.	Mosley-uddin Chaudhury and others.	1,362 3 11	..	185 0 2
426	Mahal Gopinathpur, pargana Gilahabari.	1,433 14 7	Yes ..	....	Kumar Sarat Kumar Rai.	..	326 12 4	..
445	Mahal Alihat, pargana Alihat.	1,192 0 0	No ..	8 as. Separate account No. 1. All other shares, 8 as., shall be excluded from sale.	Maharaj Kumar Gopal Lal Rai.	596 0 0	..	29 3 4
458	Mahal Parbatipur, pargana Hasia Bangalipur.	1,625 15 0	Yes ..	....	Nripendra Chandra Chaudhury and others.	..	388 1 11	..
469	Mahal Shyampur, pargana Gilahabari.	1,745 3 6	No	5 as. residuary share. All other shares, 11 as., shall be excluded from sale.	Rahimuddin Chaudhury and others.	545 6 1	..	33 11 0
470	Mahal Ramkristopur, pargana Gilahabari.	1,557 12 3	Yes ..	....	Kumar Sarat Kumar Rai.	..	574 9 11	..
471	Mahal Taherkhali, pargana Rajnagar.	729 15 4	No .	12 as. residuary share. All other shares, 4 as., shall be excluded from sale.	Haji Mohammed Samiruddin Chaudhury and others.	547 7 6	..	(a) 21 8 11 (b) 58 7 6 80 0 5
491	Mahal Joypur, pargana Bhuihara.	2,770 11 3	No ..	8 as. 3 gds 3 c. 1 kt. 1½ dt. residuary share. All other shares, 7 as. 16 gds. 1 kt. 1½ dt., shall be excluded from sale.	Neyamatulla Chaudhury.	1,418 13 1	..	183 11 2
492	Mahal Chandgaon, pargana Bhuihara.	1,258 12 10	Yes ..	....	Madanmohan Chaudhury.	..	166 12 5	..

(a) Arrear land revenue payable before 1st Chaitra 1337 B. S. (b) Arrear land revenue payable before 1st Asar 1338 B. S

Tauzi No	Name of mahal and pargana	Sadar jama of whole estate.	Whether the whole estate is to be sold	If only a share is to be sold, specification of such share or shares	Names of proprietors of property to be sold	If only a share is to be sold, the sadar jama of such share.	If the whole estate is to be sold, the arrears due from it.	If only a share is to be sold, the arrears due from it
1	2	3	4	5	6	7	8	9
		Rs A P.				Rs A. P.	Rs A P	Rs. A P
497	Mahal Anjamkhori, pargana Dehatta	1,075 7 0	Yes ..	....	Janakinath Majumder.	..	110 7 0	..
501	Mahal (jote) Ghanesyampur, pargana Sarhatta	1,292 6 4	Yes ..	...	Maharaj Bahadur Sing	..	97 6 4	..
510	Mahal Kumrik, pargana Dhanjore	2,578 11 11	No ..	8 as residuary share All other shares, 8 as, shall be excluded from sale.	Brajo Dulal Dhar and others.	1,289 5 11	..	143 5 11
510	Mahal Kumrik, pargana Dhanjore	2,578 11 11	No ..	8 as .. Separate account No 1 All other shares, 8 as, shall be excluded from sale.	Sourindranarain Dhar and others	1,289 6 0	..	144 5 0
608	Mahal Chandmukh, pargana Debikote	673 0 0	Yes ..	....	Maharaja Jagadish Nath Rai and others.	..	20 2 0	..
823	Mahal Madhabpur, pargana Bhulhara	1,298 12 3	Yes ..	....	Nagendranath Chaudhury and others	..	168 12 3	..
825	Mahal Pustampur, pargana Salbari	523 9 0	Yes ..	....	Nripendra Chandra Chaudhury and others	..	56 1 7	..
857	Mahal Rezwanulla, pargana Salbari	1,804 7 0	Yes ..	...	Maulvi Mahamed Rezwanulla Khan	..	133 7 0	..
858	Mahal Ujjalkota, pargana Salbari	1,624 0 2	Yes ..	....	Kazi Mahammed Reziuddin Abul Ilias and others	..	57 9 10	..
860	Mahal Beltara, pargana Sontosh	1,938 14 1	Yes ..	....	Gosto Behary Kar and others	..	49 14 10	..
861	Mahal Nazirpur, pargana Sontosh	969 7 1	No ..	13 as residuary share All other shares, 3 as, shall be excluded from sale	Monmohon Pal and others	787 10 9		72 7 1
895	Mahal Kashba (mauza), pargana Kardaha	1,039 11 4	Yes ..	....	Ram Sital Chakravarty and others	..	108 11 4	..
912	Mahal Chandrai (Chandai), pargana Bhulhara.	2,424 5 10	Yes ..	....	Mahfuz Ali Chaudhury and others	..	318 5 10	..
918	Mahal Jagannath pur, pargana Deora	2,250 11 1	Yes ..	....	Trailokya Tarini Shet, guardian of Jashada Nandan Shet, and others	..	165 2 10	.
952	Toke Kharikadam pargana Salbari	1,157 5 1	Yes ..	....	Chaudhury Mahammed Amin and others	..	44 8 8	..

Dinajpur, the 22nd August 1931.

L. C. GUHA, Collector.

Notification A.

NOTICE is hereby given, under sections 6 and 13, Act XI of 1859, that the undermentioned estates and shares of estates in the district of Noakhali will be put up for sale at the office of the Collector of that district on the 24th September 1931, at 12 noon, for arrears of revenue and other demands which by law are realizable as arrears of land revenue.

When in columns 5, 7 and 9 of the following statement it is stated that only a share is to be sold, it is to be understood that a separate account is kept for that share :—

Tauzi number.	Name of mahal and pargana.	Sadar jama of whole estate.	Whether the whole estate is to be sold.	If only a share is to be sold, specification of such share or shares.	Names of proprietors of property to be sold.	If only a share is to be sold, the sadar jama of such share.	If the whole estate is to be sold, the arrears due from it.	If only a share is to be sold, the arrears due from it.
1	2	3	4	5	6	7	8	9
		Rs. A. P.		*Estate.*		Rs. A. P.	Rs. A. P.	Rs. A. P.
Lot No. 2, tauzi No. 18.	Char Afzal Fakira and Char Lakshmi, pargana Sandip.	2,847 12 8	Share ..	Residuary—Hissya 2 as. 10 gds. 3 kg. 20 dhul. All other shares than that specified will be excluded from the sale.	Sreemati Raicha Khatun.	447 10 4	....	92 0 9
Lot No 3, tauzi No. 18.	Ditto ..	2,847 12 8	Do. ..	Separate account No. 1—Hissya 7 as. 17 gds. 3 c. 2 kg. 8 dhul. All other shares than that specified will be excluded from the sale.	Umacharan Shaha and others.	1,405 2 0	....	296 7 4
Lot No. 4, tauzi No. 18.	Ditto ..	2,847 12 8	Do. ..	Separate account No. 4—Hissya 1 a. 8 gds. 2 c. 2 kg. 8 dhul.	Babu Madhab Chandra Bhowmik as receiver to the Wakf estate of late Moazzam Hossain Chaudhury.	255 7 10	....	54 0 6
Lot No. 10, tauzi No. 199.	Char Algi, pargana Sandip.	1,230 0 0	Do. ..	Residuary—Hissya 5 as. 5 gds.	Ditto ..	403 0 6	....	9 13 0
Lot No. 11, tauzi No. 200.	Char Ramiz, pargana Sandip.	2,287 0 0	Whole ..	....	Ditto ..	....	72 0 0	....
				Khas Mahal Tenure.				
Lot No. 26, tauzi No. 1636.	Char Iswar Ray, Part I, tenure No. 28.	622 12 0	Whole ..	....	Bhabananda Nama and others.	....	19 0 0	....

Noakhali, the 24th August 1931.

B. R. SEN, Collector.

Notification B.

NOTICE is hereby given, under sections 6 and 13, Act XI of 1859, that the undermentioned estates or shares of estates in the district of Noakhali will be put up for sale at the office of the Collector of that district on the 24th September 1931, at 12 noon, for arrears of revenue and other demands which by law are realizable as arrears of land revenue :—

Tauzi No.	Name of mahal and pargana.	Sadar jama of whole estate.	Whether the whole estate is to be sold.	If only a share is to be sold, specification of such share or shares.	Names of proprietors of property to be sold.	If only a share is to be sold, the sadar jama of such share.	If the whole estate is to be sold, the arrears due from it.	If only a share is to be sold, the arrears due from it.
1	2	3	4	5	6	7	8	9
		Rs. A. P.				Rs. A. P.	Rs. A. P.	Rs. A. P.
Lot No. 27, tauzi No. 1636.	Char Iswar Ray, Part I, tenure No. 32.	505 11 0	Whole ..	....	Bhabananda Nama and others.	....	15 13 0	....
Lot No. 29, tauzi No. 1636.	Char Iswar Ray, Part I, tenure No. 37.	782 10 0	Do. ..	....	Ditto ..	....	24 8 0	....
Lot No. 72, tauzi No. 1666.	Char Lakshmi, tenure No. 549.	550 8 0	Do. ..	....	Kadir Baksha Mia as administrator.	....	17 3 3	....
Lot No. 85, tauzi No. 1666.	Char Pir Baksha, tenure No. 347.	630 0 0	Do. ..	....	Amana Khatun and others.	....	19 11 0	....
Lot No. 105, tauzi No. 1686.	Char Alexander kismat Alexander, tenure No. 3.	2,406 12 3	Do. ..	....	Krishna Sundar Majumdar.	....	75 5 3	....

Noakhali, the 24th August 1931.

B. R. SEN, Collector.

Notification A.

NOTICE is hereby given, under sections 6 and 13, Act XI of 1859, that the undermentioned estates and shares of estates in the district of Khulna will be put up for sale at the office of the Collector of that district on the 24th September 1931, at 12 noon, for arrears of revenue and other demands which by law are realizable as arrears of land revenue :—

Tauzi No.	Name of mahal and pargana.	Sadar jama of whole estate.	Whether the whole estate is to be sold.	If only a share is to be sold, specification of such share or shares.	Names of proprietors of property to be sold.	If only a share is to be sold, the sadar jama of such share.	If the whole estate is to be sold, the arrears due from it	If only a share is to be sold, the arrears due from it.
1	2	3	4	5	6	7	8	9
		Rs. A. P.				Rs. A. P.	Rs. A. P.	Rs. A. P.
77	Dhullapur, pargana Dhullapur.	..	..	11 annas share* .. Separate account No. 2.	Golap Sundari Devi and others.	12,016 11 5½	..	2,629 1 11
108	Babulia, pargana Buran.	..	..	8 annas share* .. Separate account No. 1.	Sailaja Nath Rai Choudhury and others.	789 5 8	..	292 11 10
132	Sailaja Nath, pargana Buran.	..	..	8 annas share* .. Separate account No. 2.	Ditto ..	3,138 14 4	..	1,460 12 10
139	Girija Nath, pargana Moloi.	..	..	8 annas share* .. Separate account No. 1.	Jatindra Nath Rai Choudhury and others.	3,589 2 1	..	1,387 4 10
181	Sarparajpur, pargana Sarparajpur.	647 9 4	Whole	..	Kusum Kumari Mitra.	..	367 8 2	..
949	Haria, pargana Sundarbana.	5,559 0 0	Do. ..	..	Quazi Abdur Rouf and others.	..	173 11 6	..
957	Bazitpur, pargana Bazitpur.	..	..	6 annas share* .. Separate account No. 1.	Hemendra Nath Rai Choudhury and others.	6,554 10 3	..	2,334 10 3
967	Hogla, pargana Hogla.	..	..	3 annas and 4 gandas share*. Separate account No. 3.	Gopal Hari Ghose Choudhury.	1,863 10 4	..	810 1 11
1027	Char pania, pargana Bazitpur.	574 0 0	Whole	..	Hari Mohon Ghose and others.	..	36 0 0	..
1077	Mati Lal, pargana Moloi.	2,297 3 9½	Do.	..	Murari Mohon Mallik and others.	..	999 9 7	..
1080	Dwijendra, pargana Moloi.	4,307 5 1	Do. ..	..	Hemendra Nath Rai Choudhury and others.	..	1,344 3 0	..
1104	Dwijendra Nath, pargana Buran.	3,766 10 10	Do. ..	..	Ditto ..	..	1,344 14 8	..

*All other shares than those specified will be excluded from sale.

Khulna, the 24th August 1931. E. W. HOLLAND, Collector.

Notification B.

NOTICE is hereby given, under sections 5 and 13, Act XI of 1859, that unless the arrears up to 30th Jaistha, 1338 B.S., mentioned below are paid on or before the next latest date of payment, viz., the 28th September 1931, the undermentioned estate or shares of estate in the district of Tippera will be put up for sale at the office of the Collector of that district on the 8th January 1932, at 12 noon, for the said arrears :—

Tauzi No.	Name of mahal and pargana.	Sadar jama of whole estate.	Whether the whole estate is to be sold.	If only a share is to be sold, specification of such share or shares.	Names of proprietors of property to be sold.	If only a share is to be sold, the sadar jama of such share.	If the whole estate is to be sold, the arrears due from it.	If only a share is to be sold, the arrears due from it.
1	2	3	4	5	6	7	8	9
		Rs. A. P.					Rs. A. P.	
396	Benode Behary Roy Choudhury, pargana Bardakhat.	1,489 12 0	Whole ..	....	Bankim Chandra Roy Choudhury and others.	..	371 13 9	..

Comilla, the 25th August 1931. N. C. BOSE, *for* Collector.

Notification A.

NOTICE is hereby given, under sections 6 and 13, Act XI of 1859, that the undermentioned estates and shares of estates in the district of Tippera, will be put up for sale at the office of the Collector of that district on the 25th September 1931, at 12 noon, for arrears of revenue and other demands up to 30th Jaistha 1338 B. S. which by law are realizable as arrears of land revenue.

When in columns 5, 7 and 9 of the following statement it is stated that only a share is to be sold, it is to be understood that a separate account is kept for that share :—

Tauzi No.	Name of mahal and pargana.	Sadar jama of whole estate.	Whether the whole estate is to be sold.	If only a share is to be sold, specification of such share or shares.	Names of proprietors of property to be sold.	If only a share is to be sold, the sadar jama of such share.	If the whole estate is to be sold, the arrears due from it.	If only a share is to be sold, the arrears due from it.
1	2	3	4	5	6	7	8	9
		Rs. A. P.				Rs. A. P.	Rs. A. P.	Rs. A. P.
51	Durgaram Mazumdar taluk, pargana Mahabatpur.	1,991 7 6	..	Hissya 6 as. 51/5. .. All other shares than that specified will be excluded from the sale.	Jogneswar Bose	746 12 10	..	66 14 8
94	Bepin Behari Roy Choudhury, pargana Homnabad.	678 2 1	Whole	..	Bepin Behari Roy Choudhury.	..	170 0 0	..
117	Taluk Indra Narayan Bose, pargana Mahal Charpata.	735 3 8	..	Hissya 13 as. 8 g. 2 c. 6/7 kt. 117/R. All other shares than that specified will be excluded from the sale.	Jogneswar Bose and others.	617 1 4	..	88 13 1
3271	Aud Behari Sukul, pargana Joar Lakhanpur.	683 8 0	Whole	..	Rameswar Sukul and others.	..	144 13 3	..
3408	Gobinda Narayan Sukul, pargana Mehar.	1,002 8 0	Do.	..	Gobinda Narayan Sukul and others.	..	251 0 0	..
3564	Fatema Begam, pargana Bardakhat.	1,031 13 0	Do. ..	..	Fatema Begam	..	258 0 0	..
165	Mahichail, hissya 1 a. 7 g. 2 c. Kismat, pargana Mahichail.	703 5 10	Do. ..	..	Mahim Chandra Aich Roy and others.	..	64 14 4	..
199	Narayanpur pargana 7 a. 5 g Kismat, pargana Narayanpur.	1,193 10 3	..	Hissya 14 a. 1 g. 3 c. 1½ kt. 199/R. All other shares than that specified will be excluded from the sale.	Srimati Kafuranessa Choudhurani and others.	1,051 4 11	..	98 10 10
210	Mahal Hara Prasanna Chakravarty, pargana Farakkabad	604 3 11	Whole	..	Hara Prasanna Chakravarty and another.	..	101 0 0	..
211	Farakkabad Tappa 3 a. 5 g. Kismat, pargana Farakkabad.	2,347 11 9	..	Hissya 6 a. 17 g. 1 5/7 kt. 211/R All other shares than that specified will be excluded from the sale.	Abdul Matin Choudhury.	1,006 2 9	..	273 6 0
211	Ditto ..	2,347 11 9	..	Hissya 4 a. 11 g. 1 c. 2 1/7kt. 211/2. All other shares than that specified will be excluded from the sale.	Ditto ..	670 12 6	..	60 5 6
211	Ditto ..	2,347 11 9	..	Hissya 4 a. 11 g. 1 c. 2 1/7kt. 211/3. All other shares than that specified will be excluded from the sale.	Ditto ..	670 12 6	..	182 3 11
281	Jogneswar Bose, pargana Sinhergar.	1,155 11 4	Whole	..	Jogneswar Bose	..	284 3 0	..
294	Syampur mahal, pargana Syampur.	3,626 8 8	..	Hissya 8as. 294/R All other shares than that specified will be excluded from the sale.	Sudhir Krishna Bandopadhyay.	1,813 3 4	..	169 9 7
1905	Meshar Char Kismat and others, Dehi No. 1, pargana Sakdi.	587 12 10	..	Hissya 14 a. 8 g. 1905/7 All other shares than that specified will be excluded from the sale.	Shib Chandra Saha and others.	529 1 0	..	98 13 0
1906	Kismat Nanupur and others, Dehi No. 13, pargana Kardi.	586 6 11	..	Hissya 14 a. 8 g. 1906/8 All other shares than that specified will be excluded from the sale.	Ditto ..	527 13 0	..	109 11 10
1910	Poon Shai kismat, etc., Dehi No. 7, by partition hissya 9 as., pargana Mehar.	671 14 5	Whole	....	Salamatulla Mia	..	125 15 5	..

Tauzi No.	Name of mahal and pargana.	Sadar jama of whole estate.	Whether the whole estate is to be sold	If only a share is to be sold, specification of such share or shares.	Names of proprietors of property to be sold.	If only a share is to be sold, the sadar jama of such share.	If the whole estate is to be sold, the arrears due from it.	If only a share is to be sold, the arrears due from it.
1	2	3	4	5	6	7	8	9
		Rs. A. P.				Rs. A. P.	Rs. A. P.	Rs. A. P.
1014	Tamta kismat and others, Dehi No. 10, by partition hissya 8 as., pargana Mehar.	557 7 9	Whole	....	Iswar Chandra Poddar and others.	..	104 8 5	..
372	Ahammadpur mauza, by partition hissya 10 as. 13 g. 1 c. 1 kt., pargana Bardakhat.	818 15 0	Do. ..	....	Ananga Mohan Ray Chaudhury, executor and shebait.	..	152 1 11	..
391	Balarampur Joar, pargana Bardakhat.	1,022 0 0	..	Hissya 5 as. 391/R .. All other shares than that specified will be excluded from the sale.	Harbilash Bandopadhyay and others.	600 10 0	..	185 12 0
406	Bora Char, No. 173, pargana Mahabatpur.	1,584 12 0	..	Hissya 5 as. 6 g. 2 c. 2 kt. 406/R. All other shares than that specified will be excluded from the sale.	Madangopal Sukul and others.	528 4 0	..	26 8 8
430	Balaram Saha, pargana Maljaddi.	621 4 0	Whole	....	Balaram Saha and others.	..	24 15 9	..
458	Kismat Jatrapur and Raghurampur, pargana Bardakhat.	725 5 0	..	Hissya 14 as. 3 g. 1 c. 1 kt. 453/R. All other shares than that specified will be excluded from the sale.	Ram Chandra Ray and others.	642 8 0	..	9 1 6
475	Majidpur Joar together with Char Nos. 206 and 208 near Lalpur, Bazar Lalpur, 8as. share, pargana Bardakhat.	3,370 11 6	..	Hissya 4 as. 475/1 .. All other shares than that specified will be excluded from the sale.	Brindarany Dashi	842 10 10	..	417 2 8
3823	Asraf Raja Chundur, Topa Farakkabad.	768 5 0	Whole	....	Abdul Adud Mia *alias* Nawab Mia.	..	134 2 0	..
3853	Girish Chandra Ray Choudhury, pargana Homnabad.	678 2 0	Do. ..	....	Girish Chandra Ray Choudhury.	..	170 0 0	..
3854	Jogendra Chandra Ray Choudhury, pargana Homnabad.	678 2 0	Do. ..	....	Jogendra Chandra Ray Choudhury.	..	170 0 0	..
2665	Joar Bishara, by partition hissya 5 as. 6 g. 2 c. 2 kt., pargana Bardakhat.	1,047 1 0	Do. ..	....	Srimati Sukhamani Chaudhurani, mother and guardian of Prafulla Kumar Roy, minor.	..	194 6 4	..
2766	Joar Siddeswari, by partition hissya 1 a. 18 g. 3 c., pargana Bardakhat.	709 15 6	Do. ..	....	Kali Pada Das Gupta and others.	..	105 3 5	..
3056	Trailokya Nath Ray Chaudhury, pargana Bardakhat.	744 14 0	Do. ..	....	Trailokya Nath Ray Choudhury.	..	372 14 0	..
3057	Mahal Hem Nalini Chaudhurani, pargana Bardakhat.	744 14 0	Do. ..	....	Sm. Hem Nalini Chaudhurani.	..	185 10 6	..
1919	Ganga Prasad Char, Topa Kamrapur.	1,153 0 0	Do. ..	....	Nabab Ali Sarkar and others.	..	140 15 7	..
2092	Surplus alluvial accretion to Shurandir Char kismat Bahadurpur, Thak No. 3555, pargana Rajnagar.	516 10 0	Do. ..	....	Munshi Alauddin Ahammad Chaudhury.	..	116 9 0	..
2099	Surplus alluvial accretion to 2nd and 5th parts of lands to Bora Char No. 173, pargana Mahabatpur.	757 9 0	Do. ..	....	Madan Gopal Sukul and others.	..	10 1 4	..
3210	Diara Char Webster, pargana Mahabatpur.	775 0 0	Do. ..	....	Sib Gobinda Sukul and others.	..	9 5 9	..

Comilla, the 25th August 1931.

N. C. BOSE, *for* Collector.

Notification A.

NOTICE is hereby given, under sections 6 and 13, Act XI of 1859, read with section 11, Act VII (B. C.) of 1868, that the undermentioned estates and shares of estates in the district of Tippera will be put up for sale at the office of the Collector of that district on the 25th September 1931, at 12 noon, for arrears of revenue and other demands which by law are realizable as arrears of land revenue.

When in columns 5, 7 and 9 of the following statement it is stated that only a share is to be sold, it is to be understood that a separate account is kept for that share :—

Tauzi No.	Name of tenure and pargana	Rent of whole tenure.	Whether the whole tenure is to be sold.	If only a share is to be sold, specification of such share or shares.	Names of tenure-holders of property to be sold.	If only a share is to be sold, the rent of such share.	If the whole tenure is to be sold, the arrears due from it.	If only a share is to be sold, the arrears due from it.
1	2	3	4	5	6	7	8	9
		Rs. A. P.				Rs. A. P.	Rs. A. P.	Rs. A. P.
1933	Joar Krishnanagar (taluk Sitaram Roy), pargana Bardakhat	9,229 11 0	..	Hissya 5 as 6 g. 2 c. 2 kt., khatian No. 2 of Gournagar, khatian No. 2 of Durgarampur, khatian No. 2 of Thanakandi, khatian No. 2 of Gazirkandi. All other shares than that specified will be excluded from the sale.	Sarada Charan Roy Chaudhury and others.	3,164 12 0	..	Rent— 8,159 4 8 Cess— 341 11 3 For instalment up to 24th May 1931.
1933	Ditto ..	9,229 11 0	..	Hissya 5 as. 6 g. 2 c. 2 kt., khatian No. 3 of Krishnanagar, khatian No. 2 of Uttar Lakhipur, khatian No. 2 of Daulatpur. All other shares than that specified will be excluded from the sale.	Radharani Chaudhurany.	2 884 12 0	..	Rent— 823 6 9 Cess nil. For instalment up to 24th May 1931.
1933	Ditto	9,229 11 0	..	Hissya 5 as. 6g. 2 c. 2 kt., khatian No. 2 of Krishnanagar, khatian No. 2 of Sitarampur, khatian No. 2 of Dakhin Lakhipur, khatian No. 2 of Asrafpur. All other shares than that specified will be excluded from the sale.	Monomohan Roy Chaudhury.	3,180 3 0	..	Rent— 1,188 14 2 Cess nil. For instalment up to 24th May 1931.
2686	Mauza Audikote, taluk Mir Ramjan Ali, pargana Bardakhat.	1,991 13 0	Whole	....	Jobeda Khatoon and others.	..	Rent— 497 15 0 Cess— 25 15 0 For instalment up to Chaitra 1337 B. S.	..
2687	Bangora Dakhin taluk Durlav Ram Deb, pargana Bardakhat.	1,445 3 0	Do. ..	....	Upendra Lochan Mazumdar and others.	..	Rent— 120 6 0 Cess— 7 5 0 For instalment up to Chaitra 1337 B.S.	..
2691	Joar Darora, pargana Bardakhat.	2,871 3 0	..	Meadi Patni taluk Hridoy Ram Das, holding No. 47, khatian No. 354 of Darora, khatian No. 444 of Ranimuri, khatian No. 93 of Patuali, khatian No. 8 of Kemtali. All other shares than that specified will be excluded from the sale.	Amrita Sekhar Das Gupta and others.	855 4 0	..	Rent— 213 13 0 Cess— 12 6 0 For instalment up to 28th May 1931.
2074	Joar Dhanapatikhola, pargana Bardakhat.	3,689 4 0	..	Meadi Patni taluk, hissya 4 as., holding No. 1, khatian No. 6 of Dhanapatikhola. All other shares than that specified will be excluded from the sale.	Prakash Chandra Sarkar and others.	890 9 0	..	Rent— 222 0 0 Cess nil. For instalment up to 24th May 1931.
2714	Joar Moheshpur, pargana Bardakhat.	1,265 6 0	Whole	....	Mukul Bala Das and others.	..	Rent— 272 14 8 Cess— 15 10 2 For instalment up to Poush 1337 B.S.	..
2719	Joar Nasaraddi, hissya 8 as., pargana Bardakhat.	607 0 0	Do. ..	....	Durga Ch. Saha and others.	..	Rent— 151 0 0 Cess— 8 0 0 For instalment of June 1931.	..
2727	Mauza Ram Nagar, pargana Bardakhat.	554 0 0	Do. ..	....	Abul Khair Serajaddi Ahamed and others.	..	Rent 177 0 0 Cess— 14 10 0 For instalment of February 1931.	..
2731	Joar Singula, pargana Bardakhat.	2,021 15 0	Do. ..	....	Kaminikanta Guha.	..	Rent— 1,010 6 0 Cess— 78 15 0 For instalment up to February 1931.	..

Comilla, the 25th August 1931.

N. C. BOSE, *for* Collector.

Notification A.

NOTICE is hereby given, under sections 6 and 13, Act XI of 1859, that the undermentioned estates and shares of estates in the district of Hooghly will be put up for sale at the office of the Collector of that district on the 24th September 1931, at 12 noon, for arrears of revenue :—

Touzi No.	Name of mahal and pargana.	Sadar jama of whole estate	Whether the whole estate is to be sold.	If only a share is to be sold, specification of such share or shares.	Names of proprietors of property to be sold.	If only a share is to be sold, the sadar jama of such share.	If the whole estate is to be sold, the arrears due from it.	If only a share is to be sold, the arrears due from it.
1	2	3	4	5	6	7	8	9
		Rs. A. P.				Rs. A. P.	Rs. A. P.	Rs. A. P.
2002	Kristobati Cherra-char, pargana Raipur.	2,266 0 0	Whole ..	....	Bepin Behari Mazumdar, Receiver to the estate of Brindaban Chandra Thakur of Guptipara.	..	1,133 0 0	..

The estate has been settled with proprietors for 15 years with effect from 1st April 1922.

This estate is being advertised for sale for instalments of revenue which were due on or before the 30th Jaistha 1338 B.S. of which the latest date of payment was the 28th June 1931.

Chinsurah, the 27th August 1931. G. C. MAZUMDAR, *for* Collector.

Advertisement of sale.

NOTICE is hereby given that the undermentioned plots of land, no longer required by Government, situated in mauza Jote Kanuramgarh, pargana Chetua, thana Daspur in the district of Midnapore, will be put up to sale at 11 o'clock on Saturday, the 26th September 1931, at Midnapore Collectorate in the Court of the Collector of Midnapore.

The purchasers of the several plots of land will be subject to the following conditions :—

1st -If the amount of purchase-money does not exceed Rs. 100, the whole amount must be paid down at once.

2nd—If the amount of purchase-money exceed Rs. 100, one-fourth of the amount must be immediately deposited. If the balance be not paid by noon of the fifteenth day after the sale, reckoning the day of sale as one, or if that day be a close holiday, then by noon of the first succeeding office day, the sale shall be cancelled, the sum deposited being forfeited to Government, and the lot again put up for sale at the risk of the defaulting purchaser, after issue of advertisement, as in the case of original sale.

3rd—The plots of land will be sold revenue-free to the highest bidders.

Consecutive lot number.	Name of district.	Pargana and mauza.	Approximate area of lot in bighas and in acres.		Description of lot.
			B. K. C.	A. R. P.	
1	Midnapore ..	Pargana Chetua, thana Daspur, mauza Jote Kanuramgarh, J. L. No. 212.	..	0·37 of an acre.	A plot of land known as "Garh Bunglow" surveyed in district settlement plot No. 2614 measuring 0·37 of an acre with a pucca wall, thatched roof, and tiled floor bunglow and a mud wall and thatched kutcha outhouse.

Midnapore, the 20th August 1931. N. K. SEN, Addl. Collector.

Notice.

PURSUANT to the orders of Government, dated the 29th June 1881, particulars of the undernoted articles, held by the Calcutta Port Commissioners as Receivers of Wrecks, each article being of value exceeding Rs. 100, are published for general information in accordance with the provisions of section 276 of Act XXI of 1923 :—

No. and date in Recovery Register.			Description of articles.	Approximate value.	Where and when recovered.	Where lying.
				Rs.		
August 1931 ..	11th	4 P. A.	92½ fms. 2¼" studlink chain ..	2,153 0 0	Jellingham Channel.	River bank close to Tuckta Ghat.
			5 „ 2¼" „ „ ..	147 0 0		
			3¼ ton stockless anchor ..	857 8 0		
			Total ..	3,157 8 0		

C. V. L. NORCOCK, Deputy Conservator.

Port Commissioners' Office, Calcutta, the 11th August 1931. (1729—3)

Notice.

PURSUANT to the orders of Government, dated the 29th June 1881, particulars of the undernoted articles, held by the Calcutta Port Commissioners as Receivers of Wrecks, each article being of value exceeding Rs. 100, are published for general information in accordance with the provisions of section 276 of Act XXI of 1923 :—

No. and date in Recovery Register.			Description of article.	Approximate value.	Where and when recovered.	Where lying.
				Rs.		
August 1931 ..	20th ..	3 P.	34 logs (Jarool wood) of various sizes and marks.	2,000	Recovered from the river off Shalimar between the 29th May and 10th July 1931.	Lying on the foreshore at Tuckta Ghat.

C. V. L. NORCOCK, Deputy Conservator.

Port Commissioners' Office, Calcutta, the 20th August 1931.

(1784—3)

SUMMONS FOR DISPOSAL OF SUIT.

In the 4th Court of the Sub-Deputy Collector at Deoghar, district Sonthal Parganas.

RENT SUIT No. 244 of 1931.

To Babu Indu Bhusan Kar.

WHEREAS the receiver of Rohini estate has instituted a rent suit against you for Rs. 15 as arrears of rent from 1334 to 1336 B.S. with interest for the holding standing in your name in mauza Shamganj, Deoghar town, you are hereby summoned to appear in this Court in person or by your authorised agent to answer the claim on the 10th day of September 1931, at 10-30 a. m., failing which the case should be decided *ex parte*.

Given under my hand and seal of this Court this 11th day of August 1931.

PRABHU NARAYAN, Sub-Deputy Collector.

(1740—2—1775)

SUMMONS FOR DISPOSAL OF SUIT.

In the 4th Court of the Sub-Deputy Collector at Deoghar, district Sonthal Parganas.

RENT SUIT No. 243 of 1931.

To Babu Tapendra Kumar Gangopadhya, Babu Sachindra Kumar Gangopadhya, Babu Biswambhar Gangopadhya, Babu Nilambar Gangopadhya.

WHEREAS the receiver of the Rohini estate has instituted a rent suit against you for Rs. 48-2 as arrears of rent from 1334 to 1336 B. S. with interest for the holding standing in your name in mauza Bompas town, Deoghar, you are hereby summoned to appear in this Court in person or by your authorised agent to answer the claim on the 10th day of September 1931, at 10-30 a.m., failing which the case should be decided *ex parte*.

Given under my hand and seal of this Court this 11th day of August 1931.

PRABHU NARAYAN, Sub-Deputy Collector.

(1741—2—1776)

SUMMONS FOR DISPOSAL OF SUIT.

In the 4th Court of the Sub-Deputy Collector at Deoghar, district Sonthal Parganas.

RENT SUIT No. 112 of 1931.

To Babu Manmatha Nath Sen.

WHEREAS the receiver of Rohini estate has instituted a rent suit against you for Rs. 38-7 as arrears of rent from 1334 to 1336 B.S. with interest for the holding standing in your name in mauza Shamganj, Deoghar town, you are hereby summoned to appear in this Court in person or by your authorised agent to answer the claim on the 10th day of September 1931, at 10-30 a.m., failing which the case should be decided *ex parte*.

Given under my hand and seal of this Court this 14th day of August 1931.

PRABHU NARAYAN, Sub-Deputy Collector.

(1742—2—1777)

SUMMONS FOR DISPOSAL OF SUIT.

In the 4th Court of the Sub-Deputy Collector at Deoghar, district Sonthal Parganas.

RENT SUIT No. 195 of 1931.

To Babu Dinanath Mukherjee.

WHEREAS the receiver of Rohini estate has instituted a rent suit against you for Rs. 31-14 as arrears of rent from 1334 to 1336 B. S. with interest for the holding standing in your name in mauza Shyamganj, Deoghar town, you are hereby summoned to appear in this Court in person or by your authorised agent to answer the claim on the 10th day of September 1931, at 10-30 a. m., failing which the case should be decided *ex parte*.

Given under my hand and seal of this Court this 10th day of August 1931.

PRABHU NARAYAN, Sub-Deputy Collector.

(1743—2—1778)

SUMMONS FOR DISPOSAL OF SUIT.

In the 4th Court of the Sub-Deputy Collector at Deoghar, district Sonthal Parganas.

RENT SUIT No. 212 of 1931.

To Babu Bipin Behari Chatterjee.

WHEREAS the receiver of the Rohini estate has instituted a rent suit against you for Rs. 21-9 as arrears of rent from 1334 to 1336 B.S. with interest for the holding standing in your name in mauza Shamganj, Deoghar town, you are hereby summoned to appear in this Court in person or by your authorised agent to answer the claim on the 25th day of September 1931, at 10-30 a.m., failing which the case should be decided *ex parte*.

Given under my hand and seal of this Court this 10th day of August 1931.

PRABHA NARAYAN, Sub-Deputy Collector.

(1744—2—1779)

SUMMONS FOR DISPOSAL OF SUITS.

In the 4th Court of the Sub-Deputy Collector at Deoghar, district Sonthal Parganas.

RENT SUIT No. 191 of 1931.

To Babu Haridas Ghosh.

WHEREAS the receiver of Rohini estate has instituted a rent suit against you for Rs. 21-15 as arrears of rent from 1334 to 1336 B.S. with interest for the holding standing in your name in mauza Shamganj, Deoghar town, you are hereby summoned to appear in this Court in person or by your authorised agent to answer the claim on the 25th day of September 1931, at 10-30 a.m., failing which the case should be decided *ex parte*.

Given under my hand and seal of this Court this 11th day of August 1931.

PRABHU NARAYAN, Sub-Deputy Collector.

(1745—2—1780)

In the 2nd Court of the Additional Sub-Judge, 24-Parganas.

EXECUTION CASE No. 38 OF 1930.

Raja Janokinath Roy and another, plaintiffs-decree-holders,

versus

(1) Kshitish Chandra Acharyya Choudhury,
(2) Romesh Chandra Acharyya Choudhury,
(3) Dharmadas Guha, Trustee to the estate of the said defendants-judgment-debtors Nos. (1) and (2), defendants-judgment-debtors.

THE following properties belonging to the judgment-debtors will be sold by public auction on 18th September 1931, at 12 noon, by the Nazir of the Court of the District Judge, 24-Parganas, at the sale room of the said Court in execution of the mortgage decree obtained by the decree-holders against the judgment-debtors in Title Suit No. 121 of 1927 of the 3rd Court of the Additional Sub-Judge, 24-Parganas. The dues of the decree-holders up to the said date of sale amount to Rs. 4,48,191-12-3 (consisting of Rs. 3,34,040-0-9 being the joint liability of judgment-debtors Nos. (1) and (2) and of Rs. 1,14,151-11-6 being the individual liability of judgment-debtor No. (2) alone).

1. Out of the mortgaged properties of the judgment-debtors described in the schedules filed herewith, the properties of schedules A and B to the exclusion of those of schedule D will be sold by auction. The properties mentioned in the said schedule D are portions appertaining to the said schedule B.

Charges.

2. There is a charge of Rs. 50 per mensem on account of maintenance of Sreejukta Sikharbashini Debi amongst others on all the properties of schedule A below.

The property in mauza Garaikuthi out of properties mentioned in item 1 of schedule B forms a moiety of the (properties in the) *nij* share of Romesh Chandra Acharyya Choudhury, the judgment-debtor No. (2), the sthit (gross collection) whereof amounts to Rs. 656 per annum, and has been hypothecated as security in connection with the work of the receiver, Romesh Chandra Acharyya Choudhury, appointed in the suit brought by Sreejukta Sindhubala Debi as the plaintiff in the Sub-Judge's Court at Noakhali, and all the properties of the schedule B are subject to a charge of Rs. 50 per mensem for the maintenance of Dwijendra Mohan Roy.

Schedule A.

3. 1 anna 5 gds. hissya, etc., of pargana Kundi, the zamindari mahal borne on the tauzi of the Collectorate of district Rangpur in No. 164, bearing a sadar jama of Rs. 3,200-5 and lying within thanas Badarganj, Nilphamari, Rangpur, Matiganj and sub-registry Badarganj, Nilphamari and Rangpur. This together with all rights and interests.

4. Kismat Mominpore, the zamindari mahal bearing No. 167 on the tauzi of the Collectorate of the said district with a revenue of Rs. 425-6-3 and lying within thana and sub-registry as above.

5. Taluk Kismat Khosh Khalat otherwise called Alamnagar, the zamindari mahal bearing No. 338-1 in the tauzi of the Collectorate of the said district with a revenue of Rs. 10-7-9 and lying within thana and sub-registry as above.

Decree-holder's valuation of the above three properties is approximately Rs. 30,000.

Judgment-debtors' valuation of the above properties is as follows :—

	Rs.	A.	P.
Property No. 3	1,69,192	0	0
Property No. 4	15,337	0	0
Property No. 5	3,345	0	0
Total ..	1,87,874	0	0

All the above three properties will be sold in one lot.

Schedule B.

1. 6 gds. 2 karas 2 krantis hissya of pargana Alapsingh the zamindari borne on the tauzi of the Collectorate of district Mymensingh in No. 7967, bearing in 16 annas a sadar revenue of Rs. 1,421-10 and lying within (thanas) Kotwali, Fulpur, Fulbaria, Muktagacha, Jamalpur, Sherpur, Pingna now Gopalpur and Netrakona and sub-registry Mymensingh Sadar, Netrakona, Jamalpur, Fulpur and Sherpur, Fulbaria and Gopalpur. The said zamindari and the maliki interest and the temporarily-settled mahal appertaining thereto and all manner of interests and jamas subordinate thereto, together with all rights and interests to the exclusion of the Khanabari at Muktagacha.

2. 1 anna 6 gds. 2 karas 2 krantis hissya of pargana Alapsingh, the zamindari included in the tauzi of the Collectorate of district Mymensingh in No. 1. Taking the same as 16 annas, 12 gandas 2 karas share thereof forming the *Kharija nij* share No. 1, bearing a sadar revenue of Rs. 198-15-8 and lying within thanas Kotwali, Fulpur, Fulbaria, Muktagacha, Jamalpur, Sherpur, Pingna now Gopalpur and Netrakona and sub-registry Mymensingh Sadar, Netrakona, Jamalpur, Fulpur, Sherpur, Fulbaria and Gopalpur. The said zamindari and the maliki interest and temporarily-settled mahal appertaining thereto and all manner of interests and jamas subordinate thereto together with all rights and interests.

3. 1 anna 6 gds. 2 karas 2 krantis hissya of pargana Alapsingh, the zamindari included in the tauzi of the Collectorate of district Mymensingh in No. 2. Taking the same as 16 annas, 1 anna 6 gds. 2 karas 2 krantis hissya thereof bearing in its own share a sadar revenue of Rs. 413-13 is payable into the said Collectorate and lying within thanas Kotwali, Fulpur, Fulbaria, Muktagacha, Jamalpur, Sherpur, Trishal, Gafargaon, Netrakona and sub-registry Mymensingh Sadar, Fulbaria, Trishal, Fulpur, Sherpur, Gafargaon, Jamalpur and Netrakona. The said zamindari and the maliki interests and temporarily-settled mahal appertaining thereto and all manner of interests subordinate thereto including jamas together with all rights and interests.

Approximate value of items 1, 2 and 3 Rs. 1,50,000 as given by the decree-holders.

Judgment-debtor's valuation of the above properties is as follows :—

	Rs.	A.	P.
Property No. I	4,40,670	0	0
Property No. II	49,455	0	0
Property No. III	1,43,910	0	0

All the above properties will be sold in one lot.

Schedule D.

1. Within 6 gds. 2 karas 2 krantis of pargana Alapsingh, the zamindari bearing No. 7969 in the tauzi of the Collectorate of district Mymensingh and station and sub-registry Trishal—

Name of mauza.	Thanawari No.	Revenue survey No.	Khatian No.	Hissya.
	(*Ks.*)			
1. Kismat Malbatia	180	341	108	Re. 1
2. Kismat Bilbahani known as Pakia, Part II ..	182	340	27	Re. 1
	(*Kks.*)			A. gd. k. kt.
1. Kismat Bahadurpur	201	356	81	1 6 2 2
2. Kismat Ariyal Bhalpari ..	198	355	73	1 6 2 2
3. Kismat Mahishapuri appertaining to Malbatia ..	180	341	108	2 0 0 0
4. Kismat Kaliaridin	146	336	722	8 0 0 0
5. Kismat Kushtea I, Part I, mahal Chak Manikson ..	197	340	200	8 0 0 0
6. Kismat Kushtea, Part II ..	182	340	200	8 0 0 0
7. Kismat Kakinadofali ..	196	352	21	1 6 2 2
8. Kismat Gobindapur Chak Manik Sen ..	..	344	43	8 0 0 0
9. Kismat Kandumudage ..	..	340	27	4 0 0 0
10. Suriner Kanda within Kismat Kalibari ..	94	333	732	1 6 2 2
11. Jaldhaka within Kismat Kalibari ..	146	336	732	1 6 2 2

2. Within 6 gds. 2 karas 2 kr. of pargana Alapsingh, the zamindari bearing No. 7969 in the tauzi of the Collectorate of district Mymensingh and station and sub-registry Trishal—

Name of mauza.	Thanawari No.	Revenue Survey No.	Khatian No.	Hissya.
Mauza Biara including hats and bazars ..	100	354	112	Re. 1

S. MUKHARJI, Sub-Judge.

Alipore, the 17th August 1931. (1739—1—1793)

In the High Court of Judicature at Fort William in Bengal, in Insolvency.

NOTICE OF ADJUDICATION ORDER.

No. 202 of 1931.

Re Archibald John Alchin, residing at No. 126B, Dharamtolla Street, in the town of Calcutta, and employed as a preventive officer, Customs, at No. 1, Charnock Place, Calcutta, *ex parte* the debtor in person.

ON the 14th day of August 1931, an order was made by the High Court of Judicature at Fort William in Bengal in its insolvency jurisdiction adjudging the abovenamed as an insolvent.

NOTE.—All debts due to the estate should be paid to me.

Dated this 20th day of August 1931.

G. M. FALKNER, Official Assignee.

In the High Court of Judicature at Fort William in Bengal, in Insolvency.

NOTICE OF ADJUDICATION ORDER.

No. 203 of 1931.

Re Prafulla Kumar Kar, lately of No. 105, Upper Chitpore Road, in the town of Calcutta, now residing at No. 5, Sree Gopal Mullick Lane, in Calcutta aforesaid, lately a clerk in the employ of Messrs. R. M. Chatterjee and Co., solicitors, of No. 6, Old Post Office Street, Calcutta, at present without any occupation, *ex parte* the debtor in person.

ON the 14th day of August 1931, an order was made by the High Court of Judicature at Fort William in Bengal in its insolvency jurisdiction adjudging the abovenamed as an insolvent.

NOTE.—All debts due to the estate should be paid to me.

Dated this 20th day of August 1931.

G. M. FALKNER, Official Assignee.

In the High Court of Judicature at Fort William in Bengal, in Insolvency.

NOTICE OF ADJUDICATION ORDER.

No. 204 of 1931.

Re Derrick Clarence White, residing at No. 37/1, Ripon Street, in the town of Calcutta, and working as an assistant in the firm of Alluminium Manufacturing Company at Dum Dum Cantonment in the district of 24-Parganas, *ex parte* the debtor.

N. K. Mitra, debtor's solicitor.

ON the 15th day of August 1931, an order was made by the High Court of Judicature at Fort William in Bengal in its insolvency jurisdiction adjudging the abovenamed as an insolvent.

NOTE.—All debts due to the estate should be paid to me.

Dated this 22nd day of August 1931.

G. M. FALKNER, Official Assignee.

In the High Court of Judicature at Fort William in Bengal, in Insolvency.

NOTICE OF ADJUDICATION ORDER.

No. 205 of 1931.

Re Nagendra Nath Roy, residing at No. 77, Shambazar Street, in the town of Calcutta, lately a broker in jute mill scrap iron but at present without any occupation, *ex parte* the debtor.

P. N. Mitter, debtor's solicitor.

ON the 15th day of August 1931, an order was made by the High Court of Judicature at Fort William in Bengal in its insolvency jurisdiction adjudging the abovenamed as an insolvent.

NOTE.—All debts due to the estate should be paid to me.

Dated this 22nd day of August 1931.

G. M. FALKNER, Official Assignee.

In the High Court of Judicature at Fort William in Bengal, in Insolvency.

NOTICE OF ADJUDICATION ORDER.

No. 207 of 1931.

Re Keith Sandford Shave, residing at No. 23, Wellesley Street, in the town of Calcutta, a clerk in the Calcutta General Post Office, *ex parte* the debtor in person.

ON the 18th day of August 1931 an order was made by the High Court of Judicature at Fort William in Bengal in its insolvency jurisdiction adjudging the abovenamed as an insolvent.

NOTE.—All debts due to the estate should be paid to me.

Dated this 22nd day of August 1931.

G. M. FALKNER, Official Assignee.

In the High Court of Judicature at Fort William in Bengal, in Insolvency.

NOTICE OF ADJUDICATION ORDER.

No. 208 of 1931.

Re Rohini Nath Roy, residing at No. 174, Lower Circular Road, in the town of Calcutta, Bar.-at-Law, one of the advocates practising in this Court, *ex parte* the debtor.

P. C. Mitter, debtor's solicitor.

ON the 20th day of August 1931, an order was made by the High Court of Judicature at Fort William in Bengal in its insolvency jurisdiction adjudging the abovenamed as an insolvent.

NOTE.—All debts due to the estate should be paid to me.

Dated this 24th day of August 1931.

G. M. FALKNER, Official Assignee.

In the High Court of Judicature at Fort William in Bengal, in Insolvency.

NOTICE OF ADJUDICATION ORDER.

No. 209 of 1931.

Re Wamanrao Krishnarao Ajinkya, residing at No. 65, Pataldanga Street, in the town of Calcutta, a clerk in the Imperial Bank of India, Strand Road, Calcutta, *ex parte* the debtor in person.

ON the 20th day of August 1931, an order was made by the High Court of Judicature at Fort William in Bengal in its insolvency jurisdiction adjudging the abovenamed as an insolvent.

NOTE.—All debts due to the estate should be paid to me.

Dated this 24th day of August 1931.

G. M. FALKNER, Official Assignee.

In the High Court of Judicature at Fort William in Bengal, in Insolvency.

NOTICE OF ADJUDICATION ORDER.

No. 210 of 1931.

Re Dhirendra Nath Dey and Bholanath Dey, residing at No. 19, Muktaram Row, in the town of Calcutta, lately carrying on business at No. 24-26, R. G. Karr Road, Calcutta, under the name and style of Dhirendra Nath Dey and Bholanath Dey Co., as paint, rope and cement dealers, at present of no occupation, *ex parte* the debtors.

K. N. Chatterjee, debtors' solicitor.

ON the 20th day of August 1931, an order was made by the High Court of Judicature at Fort William in Bengal in its insolvency jurisdiction adjudging the abovenamed as insolvents.

NOTE.—All debts due to the estate should be paid to me.

Dated this 25th day of August 1931.

G. M. FALKNER, Official Assignee.

In the High Court of Judicature at Fort William in Bengal, in insolvency.

NOTICE OF ADJUDICATION ORDER.

No. 211 of 1931.

Re Edward Vivian Gasper, residing at No. 137-11, Corporation Street in the town of Calcutta, a telegraphist in the Central Telegraph Office, Calcutta, *ex parte* the debtor in person.

ON the 21st day of August 1931, an order was made by the High Court of Judicature at Fort William in Bengal in its insolvency jurisdiction adjudging the abovenamed as an insolvent.

NOTE.—All debts due to the estate should be paid to me.

Dated this 26th day of August 1931.

G. M. FALKNER, Official Assignee.

In the High Court of Judicature at Fort William in Bengal, in insolvency.

NOTICE OF ADJUDICATION ORDER.

No. 212 of 1931.

Re Stanislaus Edward Aldridge, residing at No. 4-1, Sudder Street in the town of Calcutta, a telegraphist in the Central Telegraph Office, Calcutta, *ex parte* the debtor in person.

ON the 21st day of August 1931 an order was made by the High Court of Judicature at Fort William in Bengal in its insolvency jurisdiction adjudging the abovenamed as an insolvent.

NOTE.—All debts due to the estate should be paid to me.

Dated this 26th day of August 1931.

G. M. FALKNER, Official Assignee.

In the High Court of Judicature at Fort William in Bengal, in insolvency.

No. 190 of 1927.

Re Estate Mahomed Himat Khan and others (Achakhan Minat Khan).

No. 270 of 1923.

Re Estate Henry Pierre D'Silva.

NOTICES are hereby given that 2nd dividends are intended to be declared in the above estates.

Persons claiming to be creditors of the above estates are hereby required to submit their claims in this office duly supported by affidavit and necessary vouchers by the 15th proximo after which date no claims received by this office will be considered.

Persons who have already lodged their claims need not file any fresh claim.

A form of proof of debt may be had on application.

G. M. FALKNER, Official Assignee.

10, Old Post Office Street, Calcutta, the 24th August 1931. (1792—1)

In the Court of the Sub-Judge at Asansol.

Section 19(2) of the Provincial Insolvency Act.

INSOLVENCY CASE No. 11 of 1931.

NOTICE is hereby given to his creditors that the insolvency petition filed by C. H. Hefferan, coal-checker, East Indian Railway, Asansol, has been admitted and the 18th September 1931 has been fixed for hearing thereof.

A. K. CHAKRAVARTY, Sub-Judge.

Asansol, the 20th August 1931. (1788—1)

In the Court of the Sub-Judge at Asansol.

Section 19 (2) of the Provincial Insolvency Act.

INSOLVENCY CASE No. 44 of 1931.

NOTICE is hereby given to his creditors that the insolvency petition filed by L. P. Mackie, coal-checker, East Indian Railway, Asansol, has been admitted and the 25th September 1931 has been fixed for hearing thereof.

A. K. CHAKRAVARTY, Sub-Judge.

Asansol, the 20th August 1931. (1789—1)

In the Court of the Additional District Judge of Bogra.

INSOLVENCY CASE No. 6 of 1931.

WHEREAS Rafatulla Pramanik, son of Haji Rajek Mahmud Pramanik, by caste Musalman, Jotedar, of village Panchgram, police-station Kahaloo, district Bogra, has applied to this Court by a petition, dated 25th August 1931, to be declared insolvent, this is to give notice to all his creditors that the Court has fixed 3rd October 1931 for hearing of the aforesaid petition and for examination of the debtor.

L. M. BASU, Addl. District Judge.

Bogra, the 27th August 1931. (1810—1)

In the Court of the District Judge of Hooghly.

NOTICE is hereby given, under clause (2) of section 12 of the Provincial Insolvency Act, V of 1920, to his creditors that the insolvency petition of Panchoowri Santra, Sasi Bhusan Santra, Bhusan Ch. Santra, all sons of late Jadunath Santra, of Belgram, thana Tarakeswar, district Hooghly, has been admitted by this Court as No. 53 of 1931 and that the 18th September 1931 has been fixed for the hearing thereof.

S. SEN, District Judge.

Chinsura, the 19th August 1931. (1785—1—1794)

In the Court of the District Judge of Hooghly.

NOTICE is hereby given, under clause (2) of section 12 of the Provincial Insolvency Act, V of 1920, to his creditors that the insolvency petition of Shaikh Abu Bakkar, son of late Mobarek Ali, of Bhola, thana Singur, district Hooghly, has been admitted by this Court as No. 52 of 1931 and that the 17th September 1931 has been fixed for the hearing thereof.

S. SEN, District Judge.

Chinsura, the 19th August 1931. (1786—1—1795)

In the Court of the District Judge of Hooghly.

INSOLVENCY PETITION No. 45 of 1930.

NOTICE is hereby given that Surendra Nath Ghose, son of late Chuni Lal Ghose of Sonatikri, thana Khanakul, district Hooghly, was on the 19th day of August 1931 adjudged an insolvent. The 19th September 1931 has been fixed for framing a schedule and creditors are required to prove their claims on that day.

S. SEN, District Judge.

Chinsura, the 20th August 1931. (1787—1—1796)

In the Court of the District Judge of Khulna.

INSOLVENCY CASE No. 4 of 1930.

IT is notified that Krishnadhan Saha, son of late Abhoy Charan Saha, of Masundia, police-station Terokhada, district Khulna, the insolvent in the above case, has applied for discharge and 18th September 1931 has been fixed for hearing of the petition.

E. S. SIMPSON, District Judge.

Khulna, the 25th August 1931. (1794—1)

In the Court of the District Judge of Khulna.

INSOLVENCY CASE No. 3 of 1930.

IT is hereby notified that order of adjudication of insolvent Keshab Lal Ghosh, son of late Dwarikanath Ghosh, of Bamankhali, police-station Kalaroa, district Khulna, was annulled under section 43 (*1*) of the Provincial Insolvency Act on 10th August 1931.

E. S. SIMPSON, District Judge.

Khulna, the 26th August 1931.

NOTICE TO CREDITORS OF THE DATE OF HEARING OF AN INSOLVENCY PETITION.

Section 12 of the Provincial Insolvency Act, V of 1920.

In the Court of the District Judge at Midnapore.

INSOLVENCY APPLICATION No. 45 OF 1931.

WHEREAS Mr. G. R. P. Jones, Assistant Loco Foreman, Bengal-Nagpur Railway, Kharagpore, district Midnapore, debtor-petitioner, has applied to this Court, by a petition, dated 21st day of August 1931, to be declared an insolvent under the Provincial Insolvency Act, V of 1920, this is to give the creditors notice that the Court has fixed the 3rd day of October 1931 for the hearing of the aforesaid petition and the examination of the debtor.

K. C. NAG, District Judge.

Midnapore, the 24th August 1931. (1793—1)

ORDER OF ADJUDICATION.

Section 27 of the Provincial Insolvency Act, V of 1920.

In the Court of the District Judge of Pabna and Bogra.

INSOLVENCY CASE No. 21 OF 1931.

Re Rasiklal Pal, son of Khudiram Pal of Radhanagar, police-station and district Pabna, debtor-applicant.

ON the 18th day of August 1931, an order was made by the District Judge of Pabna and Bogra in its insolvency jurisdiction adjudging the abovenamed debtor an insolvent. He will apply for his discharge within a year.

K. C. CHUNDER, District Judge.

Pabna, the 25th August 1931. (1798—1)

In the Court of the District Judge of Rajshahi.

INSOLVENCY CASE No. 48 OF 1931.

NOTICE is hereby given that Hazi Ataruddin Mondal of Satkandari, police-station Nachol, district Malda, has applied under Act V of 1920 to be adjudicated an insolvent and that 23rd September 1931 is fixed for hearing of the application.

K. N. DATTA, District Judge.

Rajshahi, the 24th August 1931. (1800—1—1798)

In the Court of the District Judge of Rajshahi.

INSOLVENCY CASE No. 40 OF 1931.

NOTICE is hereby given that Srish Chandra Shaha of Dan Naria, police-station Puthia, district Rajshahi, has applied under Act V of 1920 to be adjudicated an insolvent and that 22nd September 1931 is fixed for hearing of the application.

K. N. DATTA, District Judge.

Rajshahi, the 24th August 1931. (1801—1)

In the 4th Court of the Sub-Judge of 24-Parganas.

INSOLVENCY CASE No. 301 OF 1931.

Golok Behari Jana of 53, Watgunge Street, Kidderpore, applicant.

To Nemai Sing, darwan of Messrs. J. Mackillican & Co., 21, Old Court House Street, Calcutta, and others, creditors.

ON the 6th day of August 1931 it was ordered that the matter of the petition of the applicant be heard on the 14th day of September 1931 and that the said applicant do attend to be examined by this Court on that date.

S. N. ROY, Sub-Judge.

Alipore, the 7th August 1931. (1681—1—1797)

MR. ABINASH CHANDRA ADHIKARY, M.A., B.L. intends to be enrolled as an Advocate, High Court.

(1695—4—1724)

MR. TARAPADA MUKHERJI, M.A., B.L., intends to be enrolled as an Advocate of the Calcutta High Court.

(1728—4—1760)

MR. SHYAMAPADA MAJUMDAR, M.A., B.L., intends to be enrolled as an Advocate of the Calcutta High Court.

(1702—4—1790)

MR. SACHINDRA NATH ROY CHOWDHURY intends to be enrolled as an Advocate, High Court.

(1813—4—1802)

RAJENDRA NARAYAN ROY, M.A., B.L., intends to be enrolled as an Advocate of the Calcutta High Court.

(1568—4—1612)

WANTED a temporary Professor of Chemistry for the Presidency College, Calcutta, for one year at present on an initial pay ranging from Rs. 340 to Rs. 500 a month, according to the age of the selected candidate.

Candidates who should be British subjects not less than 26 years old must possess a first class Master's Degree of an Indian University, or a good Honours Degree or Doctorate of a European or American University with teaching and research experience.

Applications will be received up to the 15th September 1931, by the Assistant Director of Public Instruction, Bengal, Calcutta, from whom further information can be obtained.

No. 10994L.R.

TENDERS are invited for the supply of Press materials for use in the Settlement Press which will be received by the undersigned up to the 20th September 1931. The undersigned is not bound to accept the lowest rate and will be able to refuse any tender. The tenders should be made over to the undersigned in a sealed cover.

P. D. MARTYN,

Settlement Officer, Malda.

Malda, the 31st August 1931.

Imperial Bank of India.

THE following appointments on the Bank's staff are hereby notified :—

Mr. W. J. Lutley to act as Agent, Delhi Branch, as from the 2nd August 1931, *vice* Mr. H. A. Page.

Mr. B. K. Bhisey was in charge of Nowshera Branch from the 13th to the 31st July 1931, inclusive, *vice* Mr. S. N. Kapoor.

Mr. G. D. Puri was in charge of Lyallpur Branch from the 18th to the 22nd July 1931, inclusive, *vice* Mr. R. R. Wisher.

Mr. A. M. Rutherford was in charge of Asansol Branch from the 24th to the 27th July 1931, inclusive, *vice* Mr. T. L. L. Bean.

Mr. C. L. Talwar was in charge of Meerut Branch from the 8th to the 11th August 1931, inclusive, *vice* Mr. K. F. Hailstone, M. C.

Mr. A. M. Rutherford was in charge of Bassein Branch from the 7th to the 14th August 1931, inclusive, *vice* Mr. H. R. L. Cooper.

M. G. STUART,

Secretary and Treasurer.

Calcutta, the 25th August 1931. (1807—1)

Notification.

IT is notified for general information that the proclamation regarding the destruction of a rogue elephant known as the "Tondu Elephant" published in the *Calcutta Gazette* on 19th December 1928 is hereby cancelled.

R. L. WALKER, Deputy Commissioner.

Jalpaiguri, the 29th August 1931.

THE Bengal and Madras Service Family Pension Fund which is provisionally managed and assisted by Government has for its object the provision of monthly pensions for the maintenance of the widows and children of subscribers and is open, with certain exceptions, to all active and pensioned members of the Uncovenanted service of Government (except those serving under the Government of Bombay), and to Local Fund servants earning pensions from Government. Some of the special features of the fund are—(1) that widowed daughters incapable of remarriage or children labouring under such mental or bodily infirmities as incapacitate them from earning their livelihood or preclude the possibility of marriage (in case of a daughter) are admitted to its benefits; and (2) that subscribers to the Widows' and Daughters' branches are entitled to a refund of 30 per cent. of the premia paid, should the nominee predecease them after five years of admission. The second quinquennial valuation of the Fund has been completed by the actuary to the Government of India, and his report discloses very favourable results. For forms of application and rules of the Fund apply to the Accountant-General, Bengal, Imperial Secretariat Buildings, Calcutta.

Notice to creditors under section 10 (A) of Act IX (B. C.) of 1879.

WHEREAS under sections 7 and 35 of the Court of Wards Act IX (B.C.) of 1879 as amended up to date, the Court of Wards has assumed charge of the property known as "A—unsettled" fund of Nawab K. Habibullah of Dacca, whose ancestral estate is already under the management of the Court of Wards, under section 13A of Act IX (B.C.) of 1879, and who has been declared a disqualified proprietor for the purpose of managing his said property known as "A—unsettled" fund on his own application under clause (*e*) of section 6 of the Bengal Court of Wards Act IX (B.C.) of 1879 as amended by the Bengal Decentralization Act, 1915 (Bengal Act V of 1915), by its order No. 378 W.-T., dated the 7th April 1931.

Notice is hereby given under section 10(A) of the said Act that all creditors having claims against the said estate or his immovable property, are hereby required to submit the same in writing to the undersigned at his office at Dacca within six months from the date of the publication of this notice.

Creditors are also hereby warned that claims not submitted as required by this notice, are liable to be deemed to have been duly discharged.

A. CASSELLS, Commissioner,
Dacca Division (offg.).

Dacca, the 10th August 1931. (1724—3)

Notice to creditors under section 10A of Act IX (B.C.) of 1879.

WHEREAS under sections 7 and 35 of the Court of Wards Act, IX (B.C.) of 1879, as amended up to date, the Court of Wards has assumed charge of the property of Srimati Pramila Bala Devi, Miss Hriday Bala Chowdhury, Miss Sukrity Bala Chowdhury and Miss Suprity Bala Chowdhury.

Notice is hereby given under section 10A of the said Act that all creditors having claims against the said Pramila Bala Devi, Hriday Bala Chowdhury, Sukrity Bala Chowdhury and Suprity Bala Chowdhury or their immovable property are hereby required to submit the same in writing to the Collector of Chittagong at his office at Chittagong within six months from the date of publication of this notice.

Creditors are also hereby warned that claims not submitted as required by this notice, are liable to be deemed to have been duly discharged/ceased to carry interest.

A. H. KEMM, Collector.

Chittagong, the 24th August 1931. (1791—3)

Notice to Creditors.

Estate Thomas Henry Richardson, deceased.

THE creditors and all persons interested in the estate of Thomas Henry Richardson, late of No. 11, Cavendish Road, Portsmouth in England, and lately Principal of Bengal Engineering College, Sibpur in the town of Howrah, who died on the 4th day of March 1930 and Letters of Administration (with copy Will annexed) of which estate were granted by the High Court of Calcutta to F. A. S. Sutherland and E. W. G. Malcolm, both of the Calcutta Branch of the Mercantile Bank of India, Limited, constituted attorneys in India of Delia Fanny Richardson, the widow and executrix of the said deceased, are hereby required to submit particulars of their claims with supporting vouchers to the said Administrators on or before the 30th September 1931, after which date the said Administrators will proceed to distribute the assets of the estate, having regard only to the claims of which notice shall then have been received. All persons indebted to the estate are requested to make payment of their respective debts without delay.

B. N. BASU & Co.,
Solicitors to the Administrators abovenamed.

6, Old Post Office Street, Calcutta, 26th August 1931.

(1808—1—1803)

Currency Notes.

PORTIONS of the following Currency Notes of the Calcutta Circle of issue are stated to have been destroyed and payment of their value has been claimed by the person whose name is shown against the numbers.

Any other person claiming a right to them is warned to communicate at once with the undersigned:—

Regd. No.	Note No.	Value.	Name and address of the claimant.
		Rs.	
W.D. 11 of 31-32.	8/64, 444337	100	Kiron Chandra Mukherjee, 1, Ghoshpara Lane, Salkhia, Howrah.
	8/64, 444338	100	
	8/44, 989127	100	

B. C. DUTT, Currency Officer.

Currency Office, Calcutta, the 22nd August 1931.

Currency Note.

A PORTION of the following Currency note of the Calcutta Circle of issue is stated to have been destroyed and payment of its value has been claimed by the person whose name is shown against the number.

Any other person claiming a right to it is warned to communicate at once with the undersigned—

Regd. No.	Note No.	Value.	Name and address of the claimant.
		Rs.	
W.D. 12 of 31-32.	8/19,829928	100	Patel Javerbhai Vaghajibhai c/o Bhagwandas Zaverdas Shah, Sojitra (*via* Petlad), district Baroda.

B. C. DUTT, Currency Officer.

Currency Office, Calcutta, the 27th August 1931.

Corrigendum.

IN line 2 of the advertisement regarding loss of two Government Promissory Notes at page 734, Part II of the *Calcutta Gazette* of the 20th August 1931, *for* number "314538" *read* "314535."

Name of the proprietress—Saralabala Debi.

Calcutta, the 27th August 1931. (1809—1—1801)

Lost.

THE Government Promissory Notes Nos. 223555 and 314535 of the 3½ per cent. loans of 1854-55 and 1900-01, respectively, for Rs. 1,000 each, originally standing in the name of Sreemati Saralabala Devi, the proprietress, by whom they were never endorsed to any other person, having been lost, notice is hereby given that payment of the above notes and the interest thereupon have been stopped at the Public Debt Office, Imperial Bank of India, Calcutta, and that application is about to be made for the issue of duplicates in favour of the proprietress. The public are cautioned against purchasing or otherwise dealing with the abovementioned securities.

Name of the Proprietress—Saralabala Devi.

Address—C-o Sarat Chandra Mookherji, pleader, 63, Srigopal Mullick Lane, Bowbazar, Calcutta.

(1671—3—1738)

In the matter of the Indian Companies Act, VII of 1913, and
In the matter of the Calcutta Hardware Manufacturers, Ltd. (in liquidation).

NOTICE is hereby given, pursuant to section 217(*1*) of the Indian Companies Act, VII of 1913, that a general meeting of the members of the abovenamed Company will be held at the offices of the liquidator, No. 6, Old Post Office Street, Calcutta, on 1st October 1931, at 11-30 in the forenoon, for the purpose of having an account laid before them, showing the manner in which the winding up has been conducted and the property of the Company disposed of, and of hearing any explanations that may be given by the liquidator, and also determining by extraordinary resolution the manner in which the books, accounts and documents of the Company and of the liquidator thereof shall be disposed of.

M. L. TARMASTER, F.S.A.A.,
Incorporated Accountant (Lond.), Liquidator.

Calcutta, the 18th August 1931. (1754 -1—1792)

In the matter of the Indian Companies Act, VII of 1913, and
In the matter of the Village Loan Co., Ltd. (in liquidation).

NOTICE is hereby given that by an extraordinary resolution passed at an extraordinary general meeting of shareholders of the abovenamed Company held on the 15th day of August 1931, it was resolved that as the Company was unable to pay its debts it was wound up voluntarily and the undersigned was appointed liquidator to carry on the liquidation under supervision of the Court. This notice is, therefore, being given pursuant to section 209 of the Indian Companies Act, VII of 1913, to the creditors of the Company to inform that a meeting of the creditors will be held at 5 p. m. on the 5th September 1931, at 14, Srimanto Dey Lane, Bowbazar, Calcutta, to transact such business as under provision of the law may be transacted therein.

SHIB KRISHNA CHATTERJEE, Liquidator.

Calcutta, the 21st August 1931. (1763—1 1791)

IN THE HIGH COURT OF JUDICATURE AT FORT WILLIAM IN BENGAL.

ORDINARY ORIGINAL CIVIL JURISDICTION.

In the matter of the Indian Companies Act, 1913, and
In the matter of the Indian Glace Kids, Limited (in liquidation).

BY an order made by the High Court of Judicature at Fort William in Bengal in the above matter, dated the 20th day of April 1931, on the petition of the Bharat Insurance Company, Limited, of No. 100, Clive Street, Calcutta, it was ordered that the said Company be wound up by this Court under the provisions of the Indian Companies Act, 1913, and that Mr. H. C. Das was appointed provisional liquidator of the affairs of the Company.

Calcutta, the 24th day of August 1931.

DASARATHI SHOME, Attorney for the petitioner.
(1797—1 1800)

THE stock of the Indian Law Reports, Calcutta series for the years 1901 to 1920, have been sold to Messrs. M. Subramaniam and M. V. Krishnaswamy, High Court Vakils, 8, Wood Road, Mount Road, Madras. They have also been granted the right to reprint *facsimile* any of these volumes that may already have gone or may go out of print.

The Governments of Bombay, Madras and the United Provinces have also transferred to the same firm the stock of their series of the Law Reports with similar rights for reprinting.

Intending customers for the Law Reports for these years should henceforth address the abovementioned firm direct.

Inquiries for the Calcutta series for 1876 to 1900 and 1921 onwards should, however, be sent to the undersigned. The Calcutta series for 1876-78, 1880-81, 1883-86, 1888-90, 1892-97, 1899-1900 and 1921 onwards are at present available at the Book Depôt and will be supplied on receipt of the price and other incidental charges mentioned below :—

From 1876 to 1921 Rs. 10 without postage, Rs. 12-12 with Inland postage per year.

From 1922 onwards Rs. 12 without postage, Rs. 15 with Inland postage per year.

A packing charge of annas 2 per volume (minimum charge annas 4) is made when the reports are charged at the without-postage-rate and have to be sent by unpaid railway parcel.

Inquiries for the Indian Law Reports (other than the Calcutta series) for 1876 to 1900 and 1921 onwards should be addressed to the publisher of the series concerned.

B. C. MUKHARJI, Officer in charge,
Book Depôt, Bengal Secretariat.

CALCUTTA, the 14th August 1924.

Imperial Library.

(Secretariat Buildings, 6, Esplanade East, Calcutta.)
Open on—

Weekdays and Saturdays from 10 A.M. to 7 P.M.
Sundays and Gazetted holidays from 2 P.M. to 5 P.M.

THE Imperial Library is also a Lending Library. It is free to all except children. There is no subscription to pay.

K. M. ASADULLAH, Librarian.

GOVERNMENT OF BENGAL.

FINANCE DEPARTMENT.

Miscellaneous.

Calcutta, the 20th October 1927.

NOTICE.

IN supersession of the orders issued in notice, dated the 10th June 1922, published in the *Calcutta Gazette*, dated the 14th June 1922, the following revised rates have been fixed for the *Calcutta Gazette* and its parts with effect from the date of this notice. This will not, however, affect the subscriptions already paid at previous rates until they have expired :—

	Rs.	With postage. Rs.	A.
Per annum—			
Entire	31	37	8
Part I	8	10	0
Part IA	2	3	0
Part IB	5	7	0
Part II	5	7	0
Parts III and IV together, or any one of them	1	1	8
Parts V and VI together, or any one of them	2	3	0
Bengal Library Catalogue ..	2	3	0
Jury Lists	3	4	0
Supplement	7	9	0

	Postage according to weight. Rs.	A.
Per issue—		
Entire Gazette (excluding Bengal Library Catalogue and Jury Lists)	0	12
Part I	0	4
Part IA	0	2
Part IB	0	4
Part II	0	4
Parts III and IV together, or any one of them	0	2
Parts V and VI together, or any one of them	0	2
Bengal Library Catalogue	0	8
Jury Lists	1	0
Supplement	0	4

2. This will not affect the orders relating to specially heavy issues, issued in Notice No. 1874 Mis., dated the 22nd August 1923, published in the *Calcutta Gazette*, dated the 29th August 1923.

J. A. WOODHEAD,
Secretary to the Government of Bengal.

Descriptive Catalogue of Sanskrit Manuscripts.

PARTS I, II and III of a Descriptive Catalogue of the Sanskrit Manuscripts in the Library of the Calcutta Sanskrit College, prepared by Pandit Hrishikesh Sastri and Babu Siva Chandra Gui, M.A., B.L., of that College, are offered to the public for sale. The Catalogue having to be completed in 23 parts the price of each part is 12 annas a copy exclusive of postage. Copies can be obtained from the Principal of the Sanskrit College, Calcutta.

CINCHONA FACTORY PRODUCTS.

By order of the Government of Bengal Cinchona Factory Products as manufactured and packed at the Cinchona Factory, Mungpoo, Darjeeling district, will be sold and distributed by the Superintendent of the **Presidency Jail,** *in original packages* as received from the Mungpoo Factory, at the rates herein noted **from the 1st May 1926 :—**

Quinine Sulphate.

For 60 lbs. and upwards at a time	..	Rs. 18 per lb.
For 6 lbs. and over but less than 60 lbs. at a time	..	„ 19 „
For any quantity less than 6 lbs.	..	„ 20 „

Quinine Hydrochloride.

For 60 lbs. and upwards at a time	..	Rs. 23 per lb.
For 6 lbs. and over but less than 60 lbs. at a time	..	„ 24 „
For any quantity less than 6 lbs.	..	„ 25 „

Quinine Di-Hydrochloride.

For 60 lbs. and upwards at a time	..	Rs. 25 per lb.
For 6 lbs. and over but less than 60 lbs. at a time	..	„ 26 „
For any quantity less than 6 lbs.	..	„ 27 „

Quinidine Sulphate.

For 60 lbs. and upwards at a time	..	Rs. 20 per lb.
For 6 lbs. and over but less than 60 lbs. at a time	..	„ 21 „
For any quantity less than 6 lbs.	..	„ 22 „

Cinchonidine Sulphate.

For 60 lbs. and upwards at a time	..	Rs. 25 per lb.
For 6 lbs. and over but less than 60 lbs. at a time	..	„ 26 „
For any quantity less than 6 lbs.	..	„ 27 „

Cinchonine Sulphate.

For 60 lbs. and upwards at a time	..	Rs. 12 per lb.
For 6 lbs. and over but less than 60 lbs. at a time	..	„ 13 „
For any quantity less than 6 lbs.	..	„ 14 „

Cinchona Febrifuge (Powder).

For 60 lbs. and upwards at a time	..	Rs. 9 per lb.
For 6 lbs. and over but less than 60 lbs. at a time	..	„ 9 „
For any quantity less than 6 lbs.	..	„ 10 „

Cinchona Febrifuge (Tablets).

For 60 lbs. and upwards at a time	..	Rs. 10 per lb.
For 6 lbs. and over but less than 60 lbs. at a time	..	„ 10 „
For any quantity less than 6 lbs.	..	„ 11 „

Quinoidine (Tablets).

For 60 lbs. and upwards at a time	..	Rs. 5 per lb.
For 6 lbs. and over but less than 60 lbs. at a time	..	„ 5 „
For any quantity less than 6 lbs.	..	„ 6 „

Quinoidine (in Mass).

For 60 lbs. and upwards at a time	..	Rs. 4 per lb.
For 6 lbs. and over but less than 60 lbs. at a time	..	„ 4 „
For any quantity less than 6 lbs.	..	„ 5 „

Cinchona Bark (in 50 pound original bags).

Per bag .. .. .. Rs 25.

Quinine Tablets — per box of 200 tablets each. Rs. 2-8 (Bengal) Rs. 3 (outside Bengal).

Rs. 15-8-0 per lb.

Transit charges extra in every case.

Quinine Sulphate is for sale to Government Institutions and Missionaries only. It is not for sale to Private Firms or the General Public.

Cinchona Febrifuge in Powder and Tablet form (when in stock) is for sale to Government Institutions, Missionaries and the General Public

Quinine Sulphate will be supplied to Hospitals and Dispensaries of this Presidency only at the wholesale rate of Rs. 18 per lb., irrespective of quantities. For all other purchasers the rates given above will apply.

Five and ten boxes of Quinine Tablets are sold to the public at the concession rates which will be intimated on application.

Provinces other than Bengal, Bihar and Orissa and Assam will get their supplies of Sulph. Quinine from the Director, Botanical Survey of India, Sibpur, Howrah.

Local sale at the jail gate from 10 to 12 noon.

The system of payment is by—*Cash in advance*—by "*Treasury Challans,*" which should accompany the order or indent.

In cases where this is not possible, payment should be made by "*Remittance Transfer Receipts*" or crossed "*Cheques.*"

Indents unaccompanied by cash in advance will be sent Value Payable Post. Credit sale is not allowed except under special circumstances.

In the case of *Government officers* payments will be recovered by *Book Transfer, i.e., Countersigned Invoices,* in the event of *Cash* not accompanying the indent by "*Treasury Challans,*" *Remittance Transfer Receipt* or *Cheque.*

2. Price and postage must accompany the price of the drug (when the drug is required by post).

The name of the Railway and Steamer Station or Post Office must be written distinctly when the parcels are required by Rail, Steamer or by Post. Railway parcels are sent by passenger train only.

A scale of postage is given below.

	1 oz.	2 ozs.	4 ozs.	½ lb.	¾ lb.	1 lb.
	As.	As.	As.	As.	As.	Rs. A
Quinine Sulph. ..	..	..	6	6	10	0 10
Cinchona Feb. ..	..	..	6	6	10	0 10
Cinchona Feb. Tablets	..	..	6	6	10	0 10
Quinoidine Tablets ..	..	..	..	..	..	1 2
Quinine Hydrochlor. ..	4	4	6	6	..	0 10
Quinine Di-hydrochlor.	4	4	6	6	..	0 10
Quinine Tablets ..	..	..	6	6	10	0 10

	1½ lb.	2 lb.	3 lb.	4 lb.	5 lb.	6 lb.
	Rs. A.	Rs. A.	Rs. A.	Rs. A.	Rs. A.	Rs. A.
Quinine Sulph. ..	0 14	1 2	1 6	1 14	2 6	2 14
Cinchona Feb. ..	0 14	0 14	1 6	1 10	1 14	2 6
Cinchona Feb. Tablets	1 2	1 2	1 10	1 14	2 6	2 14
Quinoidine Tablets ..	..	2 2	3 2	..	..	..
Quinine Hydrochlor. ..	1 0	0 14	1 6	1 10	..	..
Quinine Di-hydrochlor.	1 0	1 2	1 12	2 4	..	..
Quinine Tablets ..	0 14	0 14	1 6	1 10	1 14	2 2

Two different drugs are not packed in the same parcel and postage must be paid separately for each kind.

N.B.—Postage stamps are not accepted as revenue.

Government reserve the right to alter the price without notice.

Registered No. C207 *No. 36 of 1931*

The Calcutta Gazette

THURSDAY, SEPTEMBER 3, 1931.

CONTENTS:

	PAGE.
Calcutta Improvement Trust Notice ...	1117
Return of Vital Statistics for the month of January 1931	1118—1123
Statement under the Cotton Ginning and Pressing Factories Act, 1925 ..	1124
Weather and Crop Report for the week ending 26th August 1931	1125—1128
Statement showing the daily gauge-readings of certain rivers for the week ending 20th August 1931	1129—1135
Statements of weekly gauge readings of certain rivers in Bengal	1136—1137
Vital Statistics for the towns of Bengal for the weeks ending 15th and 22nd August 1931	1138—1139
Resolution on the Report on the Administration of the Jail Department of the Presidency of Bengal, for the year 1930	1140—1142

Supplement.

Official Papers.

CALCUTTA IMPROVEMENT TRUST.

Calcutta, the 13th August 1931.

Notice under Section 43 of Bengal Act V of 1911.

Scheme No. XXXIX (Humayun Place Widening and Extension and Bertram Street Widening).

The Board of Trustees for the Improvement of Calcutta hereby give notice that a street scheme, viz., Scheme No. XXXIX (Humayun Place Widening and Extension and Bertram Street Widening) has been framed for the area bounded as follows:—

North.—From a point on the north-western boundary of 15 and 15/1, Chowringhee Road running eastward along the southern edge of Chowringhee Place and across Bertram Street to a point on the south-western corner of Municipal office.

East.—From this point running southwards along the eastern edge of Bertram Street to a point on the south-western corner of Municipal Market.

South.—From this point crossing Bertram Street to the south-eastern corner of 19, Lindsay Street; thence westwards along the northern edge of Lindsay Street to a point on the south-western corner of 20, Chowringhee Road.

West.—From this point northwards along the eastern edge of Chowringhee Road to the starting point.

Particulars of the scheme, a map of the area comprised in the scheme and a statement of land which it is proposed to acquire may be inspected at the offices of the Trust at 5, Clive Street, on week days between 11 a.m. and 4 p.m. and on Saturdays between 11 a.m. and 2 p.m.

Copies of the above documents will be delivered to the applicants on payment of the following fees:—

	Rs.	as.
Particulars of the scheme ...	0	4
Map of the scheme ...	1	0
Statement of land which it is proposed to acquire ...	0	4

Objections to the scheme will be received up to the 31st October 1931.

J. A. L. SWAN, *Chairman.*

Vital Statistics for the month of January 1931 of the

Districts.	No.	Towns.	Population under registration according to census of 1921.			Births registered.		Deaths							
			Male	Female	Total.	Number registered (excluding still-births).	Still born number registered.	Cholera.	Small-pox.	Plague.	Malaria.	Enteric fever.	Measles.	Relapsing fever.	Kala-azar.
Burdwan ..	1	Burdwan..	19,583	15,033	34,616	71	2	..	2	..	11	..	..	..	..
	2	Raniganj..	8,040	6,496	14,536	26	..	..	..	..	6	..	..	..	..
	3	Asansol ..	15,464	11,035	26,499	44	3	..	..	..	..	..	..	..	..
Bankura ..	4	Bankura	13,523	11,889	25,412	40	..	..	..	..	..	..	..	..	..
	5	Vishnupur	9,736	9,662	19,398	21	..	..	39	..	11	..	..	..	..
	6	Sonamukhi	5,140	5,504	10,644	36	..	..	12	..	3	..	..	..	..
Midnapur ..	7	Midnapur	15,724	13,241	28,965	63	..	1	..	..	..	..	..	..	..
	8	Ghatal ..	5,655	5,115	10,770	49	1	..	..	..	..	..	..	..	..
Hooghly ..	9	Hooghly-Chinsura	16,723	13,215	29,938	93	2	..	10	..	..	3	..	..	..
	10	Serampur	20,210	12,987	33,197	89	1	..	..	..	..	..	..	..	..
	11	Rishra-Konnagar	15,030	8,229	23,259	35	..	..	6	..	..	..	..	..	..
	12	Baidyabati	9,174	7,297	16,471	62	..	..	..	..	..	..	..	..	..
	13	Bhadreswar	14,487	7,594	22,081	49	2	..	4	..	..	..	..	..	..
	14	Champdani	17,193	7,459	24,652	45	..	..	..	..	1	..	..	..	..
Howrah ..	15	Howrah ..	128,472	66,829	195,301	497	33	9	126	..	4	6	5	..	..
	16	Bally ..	15,264	7,945	23,209	50	..	..	..	..	1	..	..	..	..
24-Parganas	17	South Suburban.	19,083	14,262	33,345	136	2	3	2	..	15	2	1	..	1
	18	Tollyganj	13,326	8,311	21,637	61	2	1	..	..	..	..	..	..	..
	19	Budge-Budge.	17,883	7,840	25,723	36	..	..	..	..	2	..	..	..	..
	20	Baranagar	19,989	12,095	32,084	85	1	7	1	..	1	..	..	..	1
	21	Kamarhati	14,965	8,053	23,018	42	..	2	..	..	1	..	..	..	..
	22	Rajpur ..	5,760	5,652	11,412	33	..	1	..	..	1	..	..	..	..
	23	South Dum-Dum	8,786	5,294	14,080	41	..	2	..	..	..	..	..	..	..
	24	Barrackpur	14,877	7,583	22,460	24	..	..	..	..	..	..	..	..	..
	25	Panihati ..	6,148	4,013	10,161	29	2	..	1	..	2	..	..	..	..
	26	North Barrackpur	9,452	5,981	15,433	41	..	1	..	..	..	..	..	..	..
	27	Titagarh	36,533	15,918	52,451	82	..	..	..	..	..	..	..	..	..
	28	Garulia ..	9,077	4,019	13,096	20	..	..	..	..	..	..	..	..	..
	29	Naihati ..	15,464	7,822	23,286	42	1	..	12	..	..	..	1	..	..
	30	Kanchrapara.	7,182	3,150	10,332	..	..	..	..	..	..	..	..	..	..
	31	Bhatpara	45,723	19,886	65,609	121	3	..	2	..	2	3	1	..	..
	32	Basirhat ..	10,162	9,105	19,267	89	..	..	..	..	4	..	..	..	1
	33	Baduria ..	7,434	6,623	14,057	20	..	..	..	..	..	..	..	..	..
Calcutta ..	34	Calcutta ..	724,248	353,016	1,077,264	2,290	146	67	94	..	53	40	8	..	23
Nadia ..	35	Krishnagar	11,377	10,932	22,309	120	..	..	..	..	..	..	..	..	..
	36	Nabadwip	7,291	8,293	15,584	54	5	..	..	..	..	2	..	..	..
	37	Santipur	11,342	13,450	24,792	44	3	1	..	..	12	.	..	..	..

towns with a population of 10,000 and over in Bengal.

registered.

Other fevers.	Dysentery.	Diarrhœa.	Influenza.	Pneumonia.	Phthisis.	Other respiratory diseases.	Injuries including suicide.	Deaths from child-birth.	Other causes.	Total of all causes.			Total of corresponding month of previous year.			No.	Towns.
										Male.	Female.	Total.	Male.	Female.	Total.		
1	3	9	..	8	4	4	2	2	11	24	33	57	73	83	156	1	Burdwan.
2	4	..	..	1	..	..	..	..	8	13	8	21	24	16	40	2	Raniganj.
5	..	..	..	1	..	..	11	..	19	25	11	36	24	17	41	3	Asansol.
3	..	3	..	3	..	2	..	..	19	14	16	30	24	15	39	4	Bankura.
..	1	1	..	2	..	3	..	..	7	31	33	64	38	34	72	5	Vishnupur.
2	2	5	..	4	1	2	2	..	11	29	25	54	19	19	38	6	Sonamukhi.
6	..	2	..	2	..	2	..	..	14	13	14	27	41	30	71	7	Midnapur.
10	1	6	..	5	..	1	..	1	12	19	17	36	19	13	32	8	Ghatal.
12	1	4	..	12	1	1	1	1	24	40	30	70	40	45	85	9	Hooghly-Chinsura.
2	4	6	..	3	..	5	1	..	8	15	14	29	26	16	42	10	Serampur.
4	2	4	2	..	..	..	..	..	7	13	12	25	10	14	24	11	Rishra-Konnagar.
4	..	4	..	..	1	2	..	..	14	16	9	25	13	10	23	12	Baidyabati.
7	1	2	..	2	2	4	..	..	10	18	14	32	20	17	37	13	Bhadreswar.
4	2	..	1	2	..	1	..	..	11	14	8	22	11	11	22	14	Champdani.
6	91	26	..	91	29	71	12	4	176	358	298	656	326	343	669	15	Howrah.
7	2	..	..	4	..	2	..	..	2	12	6	18	14	20	34	16	Bally.
3	5	12	..	6	3	1	1	5	21	41	40	81	36	59	95	17	South Suburban.
5	3	1	..	11	..	2	..	..	6	16	13	29	16	19	35	18	Tollyganj.
14	2	9	..	..	..	..	..	..	10	16	21	37	18	21	39	19	Budge-Budge.
8	10	10	..	..	4	7	..	1	17	38	29	67	42	32	74	20	Baranagar.
7	5	2	..	1	..	4	..	..	5	21	6	27	22	18	40	21	Kamarhati.
3	..	..	..	6	..	..	..	2	4	8	9	17	11	6	17	22	Rajpur.
1	3	..	..	3	1	1	..	..	8	6	13	19	13	18	31	23	South Dum-Dum.
5	..	..	..	2	1	2	..	..	2	8	4	12	9	7	16	24	Barrackpur.
..	1	1	..	1	3	..	..	..	10	9	10	19	9	12	21	25	Panihati.
2	1	..	..	2	2	1	..	1	4	8	6	14	12	9	21	26	North Barrackpur.
34	..	1	..	..	..	..	2	1	1	21	18	39	126	72	198	27	Titagarh.
1	..	..	..	..	..	..	..	..	2	1	2	3	9	5	14	28	Garulia.
1	1	..	..	3	..	1	1	..	10	13	17	30	12	13	25	29	Naihati.
12	..	1	..	3	1	2	..	..	..	15	4	19	7	9	16	30	Kanchrapara.
18	3	3	..	14	2	4	2	1	14	40	29	69	47	23	70	31	Bhatpara.
3	4	2	..	8	3	..	1	2	21	25	24	49	43	44	87	32	Basirhat.
6	4	1	..	1	..	1	..	..	..	9	4	13	9	6	15	33	Baduria.
131	138	87	22	320	240	221	9	9	962	1,316	1,117	2,433	1,819	1,487	3,306	34	Calcutta.
15	2	..	..	1	..	4	..	..	72	39	55	94	30	22	52	35	Krishnagar
8	1	1	..	1	1	1	3	1	10	11	18	29	12	18	30	36	Nabadwip
5	8	2	..	5	3	4	1	1	18	30	25	55	36	42	78	37	Santipur.

Vital Statistics for the month of January 1931 of the

Districts.	No	Towns.	Population under registration according to census of 1921			Births registered.		Deaths							
			Male.	Female.	Total.	Number registered (excluding still-births).	Still-born number registered.	Cholera.	Small-pox.	Plague.	Malaria.	Enteric fever.	Measles	Relapsing fever.	Kala-azar.
Murshidabad	38	Berhampur	14,719	11,951	26,670	37	3	5	..	..	3	..	..	..	1
	39	Murshidabad	5,401	5,268	10,669	24	1	..	..	..	..	..	..	..	..
	40	Jiaganj-Azimganj	5,876	5,355	11,231	22	1	1	..	..	7	..	..	..	..
	41	Kandi ..	5,903	5,884	11,787	25	..	..	..	..	..	..	..	..	..
	42	Jangipur	5,167	5,572	10,739	29	1	..	..	..	..	..	..	..	..
Jessore ..	43	Jessore ..	6,410	3,729	10,139	18	..	..	..	..	5	..	..	..	2
Khulna ..	44	Khulna ..	10,235	5,814	16,049	24	..	..	..	..	..	..	..	..	2
	45	Satkhira ..	5,548	4,751	10,299	16	..	3	..	..	1	..	..	..	..
Rajshahi ..	46	Rajshahi	13,831	10,767	24,598	48	..	..	..	..	3	..	..	..	2
Dinajpur ..	47	Dinajpur	10,973	7,052	18,025	13	..	..	..	..	1	..	..	..	..
Jalpaiguri	48	Jalpaiguri	8,905	5,555	14,520	38	..	1	..	..	4	..	..	..	..
Darjeeling..	49	Darjeeling	12,877	9,381	22,258	78	1	..	..	..	4	..	..	..	1
Rangpur ..	50	Rangpur	12,059	7,017	19,076	32	..	..	..	..	5	..	..	..	1
Bogra ..	51	Bogra ..	7,257	5,065	12,322	10	..	..	..	..	..	1	..	..	..
Pabna ..	52	Pabna ..	10,352	8,991	19,343	15	..	..	..	..	..	..	..	..	..
	53	Sirajganj	13,756	11,762	25,518	45	..	4	..	..	..	..	..	..	..
Malda ..	54	English Bazar.	7,869	6,188	14,057	33	..	..	..	..	8	..	..	..	2
	55	Nawabganj	6,081	6,552	12,633	45	..	..	..	..	2	..	..	..	2
Dacca ..	56	Dacca ..	67,333	52,117	119,450	398	17	4	..	..	1	7	1	..	10
	57	Narayanganj.	19,442	11,160	30,602	121	7	35	..	..	..	..	..	..	1
Mymensingh	58	Mymensingh	16,597	8,690	25,287	53	..	6	..	..	..	..	..	..	..
	59	Jamalpur	12,566	10,547	23,113	118	..	6	..	..	2	..	..	..	3
	60	Sherpur ..	9,768	8,045	17,813	81	..	..	..	..	2	..	..	..	1
	61	Kishorganj	10,600	8,918	19,518	28	..	2	..	..	..	..	..	..	..
	62	Bajitpur ..	5,046	5,622	11,568	21	..	12	..	..	..	..	..	..	..
	63	Tangail ..	7,542	6,763	14,305	45	1	1	..	..	..	..	..	..	2
Faridpur ..	64	Faridpur	8,772	5,731	14,503	26	..	..	..	..	6	..	..	..	.
	65	Madaripur	14,309	10,988	25,297	90	1	4	..	..	2	..	..	..	..
Bakarganj	66	Barisal ..	17,584	9,160	26,744	64	..	1	1	..	..	..	..	..	..
	67	Pirojpur ..	7,515	6,326	13,841	52	..	..	..	..	..	..	..	..	..
Chittagong	68	Chittagong	24,117	11,913	36,030	97	3	..	..	..	..	..	..	..	..
Tippera ..	69	Comilla ..	15,533	10,381	25,914	16	..	8	..	..	..	..	..	..	..
	70	Brahmanbaria.	12,367	11,047	23,414	101	3	..	..	..	..	..	..	..	1
	71	Chandpur	10,636	4,482	15,118	26	..	4	..	..	1	..	..	..	..
		Total of month.	1,769,376	1,049,372	2,818,748	6,596	248	192	322	..	187	64	17	..	57
		Total of corresponding month of previous year ..	..	..	..	5,609	234	297	262	..	353	56	13	3	71
		Increase + or decrease −	..	..	..	+987	+14	−105	+60	..	−166	+8	+4	−3	−14

REMARKS.—1. The above table is compiled from returns collected by the municipalities and submitted to the Director of Public Health by the approximate to the actual in a proportion of cases and in a few instances are obviously incomplete.

2. The vital statistics of municipalities with a population of less than 10,000 have been excluded from this statement and 1918.

3. The birth and death ratios per mille per annum have been omitted from this statement according to Government of India,

CALCUTTA, *the 24th August 1931.*

towns with a population of 10,000 and over in Bengal.

registered.

Other fevers.	Dysentery.	Diarrhœa.	Influenza.	Pneumonia.	Phthisis.	Other respiratory diseases.	Injuries including suicide.	Deaths from child-birth.	Other causes.	Total of all causes.			Total of corresponding month of previous year.			No.	Towns.
										Male.	Female.	Total.	Male.	Female.	Total.		
14	8	..	..	2	2	1	..	1	17	34	20	54	23	31	54	38	Berhampur.
14	1	..	..	2	..	..	1	..	..	6	12	18	9	15	24	39	Murshidabad.
1	1	1	..	..	1	..	..	1	13	10	16	26	10	9	19	40	Jiaganj-Azimganj.
6	1	..	..	1	1	..	..	..	1	5	5	10	14	7	21	41	Kandi.
14	1	..	..	2	..	..	1	..	..	8	10	18	9	7	16	42	Jangipur.
..	..	..	..	2	..	..	..	..	5	8	6	14	11	5	16	43	Jessore.
9	1	1	..	2	..	..	1	..	7	14	9	23	25	15	40	44	Khulna.
5	2	..	..	6	..	..	..	1	4	15	7	22	12	13	25	45	Satkhira.
14	5	1	..	3	..	1	..	..	16	24	21	45	21	30	51	46	Rajshahi.
2	..	..	..	..	..	..	..	..	1	1	3	4	21	19	40	47	Dinajpur.
..	5	..	..	7	4	..	..	..	6	20	7	27	18	15	33	48	Jalpaiguri.
3	..	1	1	3	3	5	1	..	16	21	17	38	18	17	35	49	Darjeeling.
..	1	..	..	1	..	..	..	1	7	10	6	16	18	20	38	50	Rangpur.
..	..	..	..	1	1	..	..	..	1	4	..	4	12	6	18	51	Bogra.
5	1	..	..	..	..	..	..	..	6	7	5	12	11	25	36	52	Pabna.
18	1	..	..	..	..	1	2	1	5	18	14	32	19	21	40	53	Sirajganj.
4	7	..	..	2	..	..	..	2	4	14	15	29	24	22	46	54	English Bazar.
15	9	2	..	..	..	2	..	..	18	23	27	50	33	38	71	55	Nawabganj.
..	25	10	..	24	6	48	10	7	106	133	126	259	109	161	360	56	Dacca.
28	4	2	..	2	..	1	1	..	33	50	57	107	66	52	118	57	Narayanganj.
16	4	..	..	..	..	4	..	1	11	23	19	42	20	29	49	58	Mymensingh.
14	1	..	..	3	..	..	2	4	11	20	20	40	21	14	35	59	Jamalpur.
5	1	3	..	1	..	1	1	..	22	16	21	37	16	12	28	60	Sherpur.
6	1	4	..	..	..	3	..	..	4	12	8	20	11	7	18	61	Kishorganj.
5	1	2	..	..	..	..	..	1	3	9	15	24	7	11	18	62	Bajitpur.
11	2	..	..	5	..	2	1	..	8	14	18	32	15	21	36	63	Tangail.
..	..	..	..	..	1	1	..	..	2	5	5	10	12	13	25	64	Faridpur.
7	5	..	..	1	..	2	..	..	18	23	16	39	26	14	40	65	Madaripur.
17	5	1	..	5	1	1	..	..	5	25	12	37	21	36	57	66	Barisal.
4	1	..	..	..	..	..	..	..	15	11	9	20	17	12	29	67	Pirojpur.
19	4	..	..	13	1	..	..	3	32	31	32	63	46	34	80	68	Chittagong.
2	2	..	..	..	..	..	1	..	3	11	5	16	11	5	16	69	Comilla.
8	5	2	..	..	..	..	..	1	20	21	16	37	27	26	53	70	Brahmanbaria.
2	..	..	..	1	..	..	..	..	4	6	6	12	8	12	20	71	Chandpur.
616	410	235	26	617	332	420	71	56	1,969	3,003	2,597	5,600	..	..	..		
905	522	414	61	750	316	667	180	49	2,379	3,891	3,419	7,310	..	..	..		
−289	−112	−179	−35	−142	+16	−238	−109	+7	−410	−888	−822	−1,710	..	..	..		

District Health Officers. Taken as a whole, the statement possesses a relative value, although the figures for individual towns probably only incorporated in the returns for districts as ordered in Government of Bengal, Municipal Department, letter No. 118 San., dated the 8th February Education Department, letter No. 93, dated the 26th March 1918.

R. B. KHAMBATA, M.R.C.S. (Eng.), L.R.C.P. (Lond.), D.P.H. (Camb.),
Director of Public Health, Bengal (offg.).

Vital Statistics for the month of January 1931 of the

Division.	No.	Districts.	Population under registration according to census of 1921.			Births registered.		Deaths							
			Male.	Female.	Total.	Number registered (excluding still-births).	Still born number registered.	Cholera.	Small-pox.	Plague.	Malaria.	Enteric fever.	Measles.	Relapsing fever.	Kala-azar.
Burdwan ..	1	Burdwan	689,282	673,993	1,363,275	3,114	33	13	31	..	1,123	3	2	1	3
	2	Birbhum	422,986	424,584	847,570	3,133	57	..	..	..	819	12	1	2	1
	3	Bankura	480,935	483,552	964,487	2,393	13	10	13	..	838	14	2	3	5
	4	Midnapur	1,318,273	1,308,652	2,626,925	5,832	223	424	14	..	1,543	39	9	..	34
	5	Hooghly ..	468,451	462,093	930,544	2,152	5	14	48	..	501	101	3	9	9
	6	Howrah ..	391,415	387,478	778,893	1,920	..	51	21	..	158	14	1	43	16
Presidency	7	24-Parganas	1,062,266	989,125	2,051,391	5,881	41	347	12	..	500	22	4	37	65
	8	Nadia ..	731,335	693,552	1,424,887	3,714	89	33	4	..	3,169	..	2	20	8
	9	Murshidabad.	591,676	599,742	1,191,418	4,554	171	45	14	..	2,046	13	..	4	1
	10	Jessore	887,182	824,898	1,712,080	4,258	125	300	11	..	3,450	13	..	4	28
	11	Khulna ..	741,741	684,945	1,426,686	4,739	153	276	4	..	712	45	1	6	24
Rajshahi .	12	Rajshahi	753,539	711,538	1,465,077	4,042	265	218	..	..	2,709	21	..	..	45
	13	Dinajpur	885,427	801,901	1,687,328	4,704	127	6	24	..	1,942	77	49	10	90
	14	Jalpaiguri	494,432	427,317	921,749	2,473	156	2	..	..	856	19	1	1	5
	15	Darjeeling	136,217	124,273	260,490	893	34	..	1	..	98	1	1	..	3
	16	Rangpur	1,304,781	1,183,997	2,488,778	7,378	455	152	10	..	2,256	145	25	154	37
	17	Bogra ..	531,470	504,814	1,036,284	3,180	284	120	8	..	811	..	..	..	26
	18	Pabna ..	682,594	662,039	1,344,633	4,133	248	278	..	..	1,927	13	..	11	24
	19	Malda ..	478,872	480,103	958,975	2,800	32	2	7	..	2,915	7	1	1	19
Dacca ..	20	Dacca ..	1,485,445	1,490,470	2,975,915	9,116	509	1,012	84	..	1,161	44	3	..	70
	21	Mymensingh	2,447,431	2,278,695	4,726,126	11,430	617	1,612	23	..	652	87	36	61	95
	22	Faridpur	1,124,661	1,085,397	2,210,058	6,898	265	423	72	..	2,164	31	10	44	36
	23	Bakarganj	1,318,064	1,265,107	2,583,171	10,835	237	653	3	..	1	..	1	..	13
Chittagong	24	Chittagong	753,765	821,627	1,575,392	4,701	330	19	39	..	320	50	11	50	30
	25	Noakhali	738,722	734,064	1,472,786	3,758	613	144	13	..	240	98	27	52	81
	26	Tippera ..	1,367,598	1,311,029	2,678,627	7,516	472	513	26	..	221	40	1	23	74
	27	Chittagong Hill Tracts.	..	..	..										Not
		Total of month for Bengal.	22,288,560	21,414,985	43,703,545	130,547	5,554	6,667	491	..	33,307	909	191	516	842
		Total of corresponding month of previous year.	..	..	..	118,854	5,326	9,354	615	..	40,685	1,044	247	487	1,098
		Increase+ or decrease−.	..	..	..	+11,693	+228	−2,687	−124	..	−7,378	−135	−56	+29	−256

REMARKS.—1. The above table is compiled from returns collected by the Subdivisional Officers and submitted to the Director of individual districts probably only approximate to the actual.
2. The vital statistics of municipalities with a population of less than 10,000 have been included in this statement with
3. Divisional totals and the birth and death ratios per millie per annum have been omitted from this statement according to

CALCUTTA, *the 24th August 1931.*

districts excluding towns with a population of 10,000 and over in Bengal.

registered.

Other fevers.	Dysentery.	Diarrhœa.	Influenza.	Pneumonia.	Phthisis.	Other respiratory diseases.	Injuries, including suicide.	Deaths from child-birth.	Other causes.	Total of all causes.			Total of corresponding month of previous year.			No.	Districts.
										Male.	Female.	Total.	Male.	Female.	Total.		
865	65	88	2	79	32	26	27	22	288	1,282	1,388	2,670	1,615	1,637	3,252	1	Burdwan.
750	19	16	..	30	20	64	26	21	256	1,021	1,016	2,037	1,068	1,088	2,156	2	Birbhum.
438	35	77	6	62	18	34	18	11	321	921	984	1,905	1,156	1,202	2,358	3	Bankura.
1,319	125	160	8	188	75	56	51	33	1,108	2,570	2,616	5,186	3,121	3,121	6,242	4	Midnapur.
277	48	82	12	200	27	39	21	14	224	834	885	1,719	917	926	1,843	5	Hooghly.
285	43	107	..	60	32	49	27	3	232	642	599	1,241	846	884	1,730	6	Howrah.
1,445	101	98	40	184	39	61	72	38	649	1,911	1,806	3,717	2,554	2,434	4,988	7	24-Parganas.
587	41	6	1	92	14	26	43	25	462	2,266	2,267	4,533	2,976	3,025	6,001	8	Nadia.
618	16	4	..	20	13	6	24	23	478	1,701	1,624	3,325	2,157	2,070	4,227	9	Murshidabad.
761	63	29	6	93	27	21	39	38	398	2,696	2,585	5,281	3,805	3,567	7,372	10	Jessore.
676	43	48	7	59	27	24	36	45	703	1,380	1,356	2,736	1,860	1,755	3,615	11	Khulna.
306	20	18	5	7	2	16	20	26	455	2,111	1,937	4,048	2,477	2,566	5,043	12	Rajshahi.
1,375	21	32	23	130	21	24	27	60	116	2,113	1,914	4,027	2,959	2,729	5,688	13	Dinajpur.
262	36	31	29	125	58	30	20	60	243	921	857	1,778	982	994	1,976	14	Jalpaiguri.
191	11	1	6	21	23	10	5	3	97	268	199	467	352	294	646	15	Darjeeling.
2,370	58	61	11	101	23	98	26	85	176	2,818	2,979	5,797	2,621	2,574	5,195	16	Rangpur.
471	45	60	10	87	27	2	91	36	310	1,041	1,063	2,104	997	1,036	2,033	17	Bogra.
935	15	8	4	38	18	22	36	50	311	1,859	1,831	3,690	2,744	3,120	5,864	18	Pabna.
141	5	4	2	6	6	2	16	15	268	1,755	1,662	3,417	2,124	1,902	4,026	19	Malda.
2,588	305	103	6	60	57	107	42	113	1,239	3,492	3,511	7,003	3,681	3,951	7,632	20	Dacca.
4,204	120	65	39	36	84	50	52	80	1,423	4,325	4,394	8,719	4,372	4,492	8,864	21	Mymensingh.
1,678	165	66	10	70	39	99	63	55	784	2,884	2,934	5,818	3,278	3,295	6,573	22	Faridpur.
3,484	98	26	1	14	12	9	58	71	2,019	3,295	3,168	6,463	3,126	3,006	6,132	23	Bakarganj.
2,235	26	26	41	26	7	18	40	39	182	1,570	1,589	3,159	1,275	1,226	2,501	24	Chittagong.
1,900	154	96	43	150	13	137	57	120	968	2,008	2,265	4,273	1,805	1,834	3,639	25	Noakhali.
2,003	172	90	17	67	35	21	18	79	883	2,093	2,196	4,289	2,342	2,450	4,792	26	Tippera.
under registration.																27	Chittagong Hill Tracts.
32,260	1,850	1,402	320	2,012	749	1,054	955	1,165	14,613	49,777	49,625	99,402	..	..	..		
35,276	1,031	1,534	264	2,025	771	1,078	783	1,023	16,173	57,210	57,178	114,388	..	..	..		
−3,016	−81	−42	+65	−13	−22	−24	+172	+142	−1,560	−7,433	−7,553	−14,986	..	..	..		

Public Health by the District Health Officers. Taken as a whole, the statement possesses a relative value, although the figures for those of the respective districts as ordered in Government of Bengal, Municipal Department, letter No. 118 San., dated the 8th February 1918. Government of India, Education Department, letter No. 93, dated the 26th March 1918.

R. B. KHAMBATA, M.R.C.S. (Eng.), L.R.C.P. (Lond.), D.P.H. (Camb.),
Director of Public Health, Bengal (offg.).

FORM C—BENGAL.

STATEMENT OF COTTON PRESSED IN THE BENGAL PRESIDENCY FOR THE WEEK ENDING 21st AUGUST 1931.

[Section 5(2) of the Cotton Ginning and Pressing Factories Act, 1925.]

Name of Division or block.	Number of bales pressed.				District included in the block.
	During the week.	During the corresponding week, last year.	Since 1st September 1930 (the date prescribed by the Local Government as the commencement of the season).	During the corresponding period, last year.	
The Bengal Presidency	274 or 269·9 bales of 400 lbs. each.	231	34,369	33,210	All districts in the Presidency.

J. B. McBRIDE,
Chief Inspector of Factories, Bengal (offg.).

Statement showing particulars of cotton pressing factories in Bengal with the special mark allotted to each factory as required under the Cotton Ginning and Pressing Factories Act, 1925, and the Rules made thereunder for the cotton year 1931.

	Names and addresses of factories.	Names of owners or lessees.	Special mark allotted.
1.	Ralli Brothers Ranee Cotton Ginning and Pressing Factory, Cossipore.	Messrs. Ralli Brothers, Limited ..	1 L
2.	Calcutta Hydraulic Press Company, Limited, 9, Kali Prosonna Singhee Street, Cossipore.	Messrs. Andrew Yule & Company, Limited.	2 L
3.	Empress of India Jute Press, 54, Ghoosery Road, Howrah.	Late Rai Mohunlal Khottry Bahadur	5 L
4.	Ralli Brothers Cotton Ginning and Pressing Factory, Narayanganj.	Messrs. Ralli Brothers, Limited ..	7 L
5.	Nittyananda Cotton Ginning and Pressing Factory, Double Moorings, Chittagong.	Ditto ..	8 L
6.	Campordown Pressing Company, Limited, 5, Rustomjee Parsee Road, Cossipore.	Messrs. Cox Brothers, Limited ..	14 L
7.	Atlas Jute Press, 1, Kali Prosonna Singhee Street, Cossipore.	Messrs. Andrew Yule & Company, Limited.	15 L
8.	Union Jute Press, 6, Nawab Delarjung Road, Cossipore.	Ditto ..	16 L
9.	Karnaphuli Jute Mills' Press, Damakhali, post-office Mahoshkhali, Chittagong.	Messrs. The Karnaphuli Jute Mills, Limited.	17 L
10.	Bandaghat Jute Press, 4 to 4-9, Hazarimull Shah Road, Salkea, Howrah.	Mr. S. C. Chunder ..	19 L

J. B. McBRIDE,
Chief Inspector of Factories, Bengal (offg.).

DISTRICT REPORTS ON WEATHER AND CROPS.

For the week ending on the 26th August 1931.

Summary.—During the week the rainfall was generally light to moderate. Transplantation of winter paddy seedlings continues under favourable conditions except in the flood affected tracts of East and North Bengal. Harvesting of jute and other autumn crops is progressing in East and North Bengal and has just commenced in parts of West Bengal. Flood water is gradually subsiding. Distress continues in parts of Nadia, Murshidabad, Rangpur, Bogra and Malda. The number of persons gratuitously relieved was 324 in Murshidabad, 4,648 in Rangpur. Gratuitous relief also continues to be given in Nadia. Agricultural loans are being distributed in Malda and arrangements for distribution are being made in Bogra. The average price of common rice of the province has risen by about 0·75 per cent. as compared with that of the previous week.

Serial No.	District and subdivision.	Rainfall.	Price of common rice, in seers, per rupee.		Character of the weather, condition of crops, etc.
			This week.	Previous week.	
1	2	3	4	5	6
		Inches.			
1	24-Parganas ..	3·58	9¾	9¼	Weather seasonable. Harvesting continues. Fodder and water are sufficient.
	Diamond Harbour.	7·73	10½	10½	
	Barrackpore ..	3·83	8½	8½	
	Baraset ..	3·61	9	9	
	Basirhat ..	5·04	9	9	
2	Nadia ..	2·71	9½	9½	Weather seasonable. Test relief works are closed. Gratuitous relief continues in Kushtia and Chuadanga subdivisions. Harvesting of jute has commenced in Kushtia and Ranaghat subdivisions.
	Kushtia ..	3·30	10	10	
	Meherpur ..	2·36	8 13/16	8 13/16	
	Chuadanga ..	1·48	10	10	
	Ranaghat ..	2·68	10	10	
3	Murshidabad ..	0·77	10½	10½	Weather seasonable. Prospects of crops are fair. Fodder and water are sufficient. Cattle-disease is reported from thanas Raghunathganj and Suti in Jangipur subdivision. 34 maunds and 31 seers of rice at a cost of Rs. 124-4-4 were distributed among 95 men, 218 women and 11 children at relief centres in Jellingi police-station during the week ending on the 22nd August 1931. Harvesting of jute has commenced in Lalbagh and Jangipur subdivisions.
	Lalbagh ..	3·31	10½	10½	
	Jangipur ..	0·70	10½	10½	
	Kandi	0·54	12	12	
4	Jessore ..	2·42	9	9	Weather seasonable. Prospects of standing crops are good. Fodder and water are sufficient. Jute crop is harvested to the extent of four annas.
	Jhenidah ..	1·72	10	10	
	Magura ..	3·10	10	10	
	Narail ..	6·15	9½	9½	
	Bongaon ..	1·04	9½	9½	
5	Khulna ..	2·31	11	11	Weather seasonable; its effects on crops are favourable. Cattle disease is reported from thanas Satkhira and Kaliganja. Fodder and water are sufficient. Export and import of rice continue slowly. Harvesting continues.
	Satkhira ..	4·35	10	10	
	Bagerhat ..	1·13	8½	8½	

Serial No.	District and subdivision.	Rainfall.	Price of common rice, in seers, per rupee.		Character of the weather, condition of crops, etc.
			This week.	Previous week.	
1	2	3	4.	5	6
		Inches.			
6	Burdwan ..	3·87	10	10	Weather seasonable. Fodder and water are sufficient. Harvesting of jute has not commenced
	Asansol ..	2·05	9	9	
	Katwa ..	1·38	11	11	
	Kalna ..	2·02	10½	11	
7	Birbhum ..	2·08	12¾	13	Weather hot and cloudy. Fodder and water are sufficient. Cattle-disease is reported from Labpur thana.
	Rampurhat ..	1·48	11	11	
8	Bankura ..	0·27	11	11½	Weather hot and cloudy. Prospects of standing crops are good. Fodder and water are sufficient. Cattle-disease is reported from Onda police-station.
	Vishnupur ...	1·90	11¾	11½	
9	Midnapore ..	2·02	12 1/16	13	Weather cloudy. Fodder and water are sufficient.
	Contai ..	3·26	12	12	
	Tamluk ..	2·10	10½	10½	
	Ghatal ..	3·51	12⅝	12½	
	Jhargram ..	5·43	11¾	11¾	
10	Hooghly ..	3·95	9½	9½	Weather seasonable. Fodder is sufficient. Harvesting of jute has not commenced.
	Serampore ..	3·48	9¼	9¾	
	Arambagh ..	3·07	13¼	12½	
11	Howrah ..	4·23	8	8	Weather moderate and helpful to standing crops No import or export. Fodder and water are sufficient.
	Uluberia ..	3·87	11	11	
12	Rajshahi (Rampur-Boalia).	0·44	9	10½	Weather seasonable. Fodder is insufficient in Gurudaspur and Singra thanas. Floods have subsided. Cattle-disease is reported from Gurudaspur thana. Harvesting of jute is going on The outturn of autumn paddy is expected to be fair.
	Naogaon ..	2·22	10½	10½	
	Nator ..	2·15	8¼	9¼	
13	Dinajpur ..	0·42	10	10	Weather seasonable; its effects on agricultural operations are favourable. Fodder and water are sufficient. Cattle-disease is reported from Balurghat, Patnitola and Porsha thanas.
	Thakurgaon ..	0·84	11	10	
	Balurghat ..	0·92	12	12	
14	Jalpaiguri ..	2·53	6	6	Present weather favourable. Fodder and water are sufficient. About 4 annas of jute crop is harvested.
	Alipur ..	7·39	6⅛	6½	
15	Darjeeling ..	2·30	7	7	Marua and paddy are growing. Potatoes and maize are being harvested. Fodder and water are sufficient. Harvesting of jute is partly finished.
	Kurseong ..	5·79	7	7	
	Siliguri ..	2·56	9	9	
	Kalimpong ..	(n)	(n)	(n)	

(n) Not reported.

Serial No.	District and subdivision.	Rainfall.	Price of common rice, in seers, per rupee.		Character of the weather, condition of crops, etc.
			This week.	Previous week.	
1	2	3	4	5	6
		Inches.			
16	Rangpur ..	Nil	9	9	Weather hot. Prospects of crops in flood areas are unsatisfactory. Fodder is insufficient in Kurigram and Gaibandha subdivisions. Cattle-disease is reported from Kurigram thana. Harvesting of jute is in progress. 4,648 persons received gratuitous relief.
	Nilphamari ..	2·75	10	10	
	Kurigram ..	0·33	9½	9½	
	Gaibandha ..	0·21	9	8½	
17	Bogra ..	1·67	10½	10½	Flood water is subsiding. Preliminary enquiries regarding distribution of agricultural loans have been finished; distribution will commence from the 29th instant at the different centres. Distribution of Rs. 50,000 is expected by the 15th of September next. Lists of deserving persons for gratuitous relief are under preparation. Harvesting of jute and *aus* paddy continues on the western side.
18	Pabna ..	2·97	9½	9½	Export and import are normal. Prices are steady. Fodder is insufficient. *Aus* and *aman* paddy have been damaged to the extent of about 50 per cent. Prospects of crops are gloomy. Twelve annas of jute crop is harvested.
	Sirajganj ..	0·82	9½	9½	
19	Malda ..	0·05	11	11	Weather seasonable. Agricultural loans are being distributed in the affected area. Transplantation of winter paddy continues. Harvesting of jute crop continues. Fodder and water are sufficient.
20	Cooch Behar ..	2·18	9⅝	9⅝	Weather seasonable. Harvesting of autumn paddy, transplantation of *haimanti* seedlings and cutting, steeping and washing of jute are continuing. About four annas of jute crop is harvested.
21	Dacca ..	1·91	9½	9½	Rainfall at North Sadar (Kapasia) 0·59. Weather seasonable and flood is subsiding. Condition of standing crops is not very satisfactory. Eight annas of jute crop is harvested. Fodder is scarce. Water-hyacinth is serving the purpose of fodder in the flooded areas.
	Manikganj ..	4·16	9	9	
	Narayanganj	0·56	8½	10	
	Munshiganj ..	1·29	10	10	
22	Mymensingh ..	3·22	9	9	Weather seasonable. Prospects of standing crops are fair. Water sufficient. Fodder is still not available in some places of Jamalpur and Sadar.
	Jamalpur ..	0·19	9½	9½	
	Tangail ..	0·05	9	9	
	Netrakona ..	1·50	10	10	
	Kishorganj ..	0·41	9	9	

Serial No.	District and subdivision.	Rainfall.	Price of common rice, in seers, per rupee.		Character of the weather, condition of crops, etc.
			This week.	Previous week.	
1	2	3	4	5	6
		Inches.			
23	Faridpur ..	2·07	9½	9½	Weather seasonable, its effects are not favourable. Prospects of standing crops are unsatisfactory owing to floods. No import or export. Fodder is not sufficient. Nine annas of jute crop is harvested.
	Goalundo (Rajbari).	2·54	9	9	
	Madaripur ..	5·12	9	9¾	
	Gopalganj (*a*)	1·65	9	9	
24	Bakarganj (Barisal).	6·99	9⅜	9½	Weather seasonable. Fodder and water are sufficient.
	Pirojpur ..	1·67	9¾	10	
	Patuakhali ..	8·33	9½	10	
	Dakshin Shabazpur (Bhola).	4·78	9	9	
25	Chittagong ..	1·25	10 11½*	10 11*	Weather seasonable. Prospects of standing crops fair. Transplantation of *aman* crop is in progress. Cattle-disease is reported from Teknaf police-station. Fodder and water are sufficient. *Panga* salt sells at 16 seers per rupee at Sadar and at 13 seers per rupee at Cox's Bazar.
	Cox's Bazar ..	6·00	11	11	
26	Tippera (Comilla).	0·47	8	9	Prospects of crops are fair. Harvesting of jute continues.
	Brahmanbaria	0·87	10	10	
	Chandpur ..	1·72	9½	9½	
27	Noakhali ..	4·10	10	10	Weather seasonable.
	Feni ..	0·79	12	12	
28	Chittagong Hill Tracts.	0·82	12	12	More rain is wanted.
29	Tripura State ..	0·92	8¾	8¾	Weather seasonable. Rinder pest exists at Sabroom. Cleansed cotton sells at Rs. 5 to Rs. 12⅝ per maund and jute at Rs. 2½ to Rs. 5 per maund. Fodder and water are sufficient.

* Burma rice.

(*a*) The rain fall at Haridaspur, which is very near to Gopalganj, is not shown here.

DACCA, *the 29th August 1931.*

J. C. ROY, for *Director of Agriculture, Bengal.*

Statement showing the daily gauge readings of certain rivers at the stations named below for the 14th August 1931.

Name of river and place where readings are taken.	Hour.	Reading on gauge.	Value of zero referred to P W.D. datum.	Height above P. W. D. datum.	Compared with previous day's height.		Height above P. W. D. datum on same date in—	
					Rise.	Fall.	1930.	1929.
Ganges .. Monghyr ..	6 a.m. ..	123·50′	0·00′	123·50′	0·40′	..	125·30′	123·70′
Ganges .. Rajmahal ..	6 „ ..	82·80′	0·00′	82·80′	0·40′	..	83·30′	82·75′
Ganges .. Goalundo ..	8-54 „ ..	29·50′	1·409′	30·909′	0·10′	..	24·009′	26·309′
Bhagirathi .. Swarupganj ..	6 p.m. ..	27·16′	0·00′	27·16′	0·27′	..	26·10′	26·94′
Brahmaputra .. Dibrugarh ..	8 a.m.	32·50′	*302·70′	335·20′	..	0·40′	335·40′	334·21′
Brahmaputra .. Gauhati ..	....	25·80′	136·958′	162·758	..	0·50′	157·458′	156·458′
Brahmaputra .. Serajganj ..	12-24 p.m. ..	41·50′	1·509′	43·009′	..	0·10′	38·309′	39·509′
Dhaleswari .. Sabhar ..	7 a.m. ..	24·70′	0·00′	24·70′	..	0·10′	19·50′	20·90′
Meghna .. Fenchuganj ..	7 a.m. ..	28·10′	1·509′	29·609′	..	0·05′	28·209′	..
Meghna .. Bhairab Bazar ..	6-24 „ ..	20·46′	1·61′	22·07′	..	0·04′	19·69′	19·44′
Meghna .. Chandpur ..	6-24 „ ..	12·33′	1·61′	13·94′	0·08′	..	11·94′	12·28′
Lakhya .. Narayanganj ..	7 a.m. ..	26·00′	–5·59′	20·41′	0·17′	..	16·20′	16·58′
Madaripur Bil Route .. Takerhat ..	6-55 p.m. ..	15·30′	0·00′	15·30′	0·15′	..	12·20′	12·70′
Damodar .. Edilpur ..	6 a.m. ..	12·33′	92·58′	104·91′	..	1·17′	103·08′	106·33′

* Zero of gauge has been altered from 24th July 1931.

Statement showing the daily gauge readings of certain rivers at the stations named below for the 15th August 1931.

Name of river and place where readings are taken.	Hour.	Reading on gauge.	Value of zero referred to P. W. D. datum.	Height above P.W.D. datum.	Compared with previous day's height.		Height above P. W. D. datum on same date in—	
					Rise.	Fall.	1930.	1929.
Ganges .. Monghyr	6 a.m. ..	123·60′	0·00′	123·60′	0·10′	..	125·50′	123·80′
Ganges .. Rajmahal	6 „ ..	82·90′	0·00′	82·90′	0·10′	..	83·80′	82·60′
Ganges .. Goalundo	8-54 „ ..	27·90′	1·409′	29·309′	Steady.		24·309′	26·109′
Bhagirathi .. Swarupganj	6 p.m. ..	27·43′	0·00′	27·43′	0·27′	..	26·74′	26·92′
Brahmaputra .. Dibrugarh	8 a.m. ..	32·20′	*302·70′	334·90′	..	0·30′	335·20′	..
Brahmaputra .. Gauhati	....	25·60′	136·958′	162·558′	..	0·20′	157·658′	156·858′
Brahmaputra .. Serajganj	12-24 p.m. ..	41·40′	1·509′	42·909′	..	0·10′	38·609′	39·209′
Dhaleswari .. Sabhar	7 a.m. ..	24·80′	0·00′	24·80′	0·10′	..	19·60′	20·90′
Meghna .. Fenchuganj	7 a.m. ..	28·10′	1·509′	29·609′	Steady.		28·209′	..
Meghna .. Bhairab Bazar	6-24 a.m. ..	20·50′	1·61′	22·11′	0·04′	..	19·78′	19·44′
Meghna .. Chandpur	6-59 „ ..	13·00′	1·61′	14·61′	0·67′	..	11·94′	12·11′
Lakhya .. Narayanganj	7 a.m. ..	26·17′	−5·59′	20·58′	0·17′	..	16·28′	..
Madaripur Bil Route .. Takerhat	6-54 p.m. ..	15·55′	0·00′	15·55′	0·25′	..	12·30′	12·70′
Damodar .. Edilpur	6 a.m. ..	10·25′	92·58′	102·83′	..	2·08′	102·33′	108·33′

* Zero of gauge has been altered from 24th July 1931.

Statement showing the daily gauge readings of certain rivers at the stations named below for the 16th August 1931.

Name of river and place where readings are taken.	Hour.	Reading on gauge.	Value of zero referred to P. W. D. datum.	Height above P. W. D. datum.	Compared with previous day's height.		Height above P. W. D. datum on same date in—	
					Rise.	Fall	1930.	1929.
Ganges .. Monghyr	6 a.m.	123·80′	0·00′	123·80′	0·20′	..	125·60′	123·50′
Ganges .. Rajmahal	6 „	82·90′	0·00′	82·90′	Steady.		84·10′	82·60′
Ganges .. Goalundo	8-54 „	28·10′	1·409′	29·509′	0·20′	..	24·809′	25·909′
Bhagirathi .. Swarupganj	6 p.m.	27·66′	0·00′	27·66′	0·23′	..	27·10′	26·99′
Brahmaputra .. Dibrugarh	8 a.m.	31·80′	*302·70′	334·50′	..	0·40′	334·90′	333·86′
Brahmaputra .. Gauhati	....	25·30′	136·958′	162·258′	..	0·30′	157·858′	156·658′
Brahmaputra .. Serajganj	12-24 p.m.	41·40′	1·509′	42·909′	Steady		38·709′	39·109′
Dhaleswari .. Sabhar	7 a.m.	24·70′	0·00′	24·70′	..	0·10′	19·70′	20·80′
Meghna .. Fenchuganj	7 a.m.	28·05′	1·509′	29·559′	..	0·05′	28·259′	28·659′
Meghna .. Bhairab Bazar	6-24 „	20·50′	1·61′	22·11′	Steady		19·78′	19·36′
Meghna .. Chandpur	7-29 „	13·50′	1·61′	15·11′	0·50′	..	11·94′	12·28′
Lakhya .. Narayanganj	7 a.m.	26·25	—5·59′	20·66′	0·08′	..	16·41′	16·49′
Madaripur Bil Route .. Takerhat	6-54 p.m.	15·90′	0·00′	15·90′	0·35′	..	12·30′	12·60′
Damodar .. Edilpur	6 a.m.	9·83′	92·58′	102·41′	..	0·42′	101·16′	106·41′

*Zero of gauge has been altered from 24th July 1931.

Statement showing the daily gauge readings of certain rivers at the stations named below for the 17th August 1931.

Name of river and place where readings are taken.	Hour.	Reading on gauge.	Value of zero referred to P. W. D. datum.	Height above P. W. D. datum.	Compared with previous day's height.		Height above P. W. D. datum on same date in—	
					Rise.	Fall.	1930.	1929.
Ganges .. Monghyr	6 a.m. ..	123·70′	0·00′	123·70′	..	0·10′	125·80′	123·50′
Ganges .. Rajmahal	6 „ ..	83·00′	0·00′	83·00′	0·10′	..	84·50′	82·60′
Ganges .. Goalundo	8-54 „ ..	29·40′	1·409′	30·809′	1·30′	..	25·209′	25·909′
Bhagirathi .. Swarupganj	6 p.m. ..	27·67′	0·00′	27·67′	0·01′	..	27·25′	26·97′
Brahmaputra .. Dibrugarh	8 a.m. ..	31·90′	*302·70′	334·60′	0·10′	..	334·80′	333·36′
Brahmaputra .. Gauhati	....	24·50′	136·958′	161·458′	..	0·80′	157·858′	156·758′
Brahmaputra .. Serajganj	12-24 p.m. ..	41·20′	1·509′	42·709′	..	0·20′	38·909′	39·109′
Dhaleswari .. Sabhar	7 a.m. ..	24·80′	0·00′	24·80′	0·10′	..	19·80′	20·80′
Meghna .. Fenchuganj	7 a.m. ..	28·00′	1·509′	29·509′	..	0·05′	28·209′	28·859′
Meghna .. Bhairab Bazar	6-24 „ ..	20·50′	1·61′	22·11′	Steady.		19·78′	19·28′
Meghna .. Chandpur	8-4 „ ..	13·50′	1·61′	15·11′	Steady.		11·86′	12·28′
Lakhya .. Narayanganj	7 a.m. ..	26·30′	−5·59′	20·71′	0·05′	..	16·24′	16·41′
Madaripur Bil Route .. Takerhat	6-53 p.m.	16·00′	0·00′	16·00′	0·10′	..	12·25′	12·55′
Damodar .. Edilpur	6 a.m. ..	7·37′	92·58′	99·95′	..	2·46′	104·66′	106·75′

*Zero of gauge has been altered from 24th July 1931.

Statement showing the daily gauge readings of certain rivers at the stations named below for the 18th August 1931.

Name of river and place where readings are taken.	Hour.	Reading on gauge.	Value of zero referred to P. W. D. datum.	Height above P. W. D. datum.	Compared with previous day's height.		Height above P. W. D. datum on same date in—	
					Rise.	Fall.	1930.	1929.
Ganges .. Monghyr ..	6 a.m. ..	124·20′	0·00′	124·20′	0·50′	..	126·10′	123·80′
Ganges .. Rajmahal ..	6 „ ..	83·05′	0·00′	83·05′	0·05′	..	84·70′	82·60′
Ganges .. Goalundo ..	8-24 „ ..	29·30′	1·409′	30·709′	..	0·10′	25·609′	25·909′
Bhagirathi .. Swarupganj ..	8 a.m. ..	27·63′	0·00′	27·63′	..	0·04′	27·28′	26·82′
Brahmaputra .. Dibrugarh ..	8 a.m. ..	31·40′	*302·70′	334·10′	..	0·50′	335·40′	333·16′
Brahmaputra .. Gauhati ..	....	24·30′	136·958′	161·258′	..	0·20′	157·958′	156·558′
Brahmaputra .. Serajganj ..	12-24 p.m. ..	41·10′	1·509′	42·609′	..	0·10′	39·009′	39·209′
Dhaleswari .. Sabhar ..	7 a.m. ..	24·70′	0·00′	24·70′	..	0·10′	19·90′	20·70′
Meghna .. Fenchuganj ..	7 a.m. ..	28·00′	1·509′	29·509′	Steady.		28·209′	28·859′
Meghna .. Bhairab Bazar ..	6-24 „ ..	20·50′	1·61′	22·11′	Steady.		19·78′	19·19′
Meghna .. Chandpur ..	8-49 „ ..	13·25′	1·61′	14·86′	..	0·25′	11·86′	12·28′
Lakhya .. Narayanganj ..	7 a.m. ..	26·17′	−5·59′	20·58′	..	0·13′	16·16′	16·53′
Madaripur Bil Route .. Takerhat ..	....	16·05′	0·00′	16·05′	0·05′	..	12·25′	12·55′
Damodar .. Edilpur ..	6 a.m. ..	7·25′	92·58′	99·83′	..	0·12′	102·58′	103·83′

* Zero of gauge has been altered from 24th July 1931.

Statement showing the daily gauge readings of certain rivers at the stations named below for the 19th August 1931.

Name of river and place where readings are taken.	Hour.	Reading on gauge.	Value of zero referred to P. W. D. datum.	Height above P. W. D. datum.	Compared with previous day's height.		Height above P. W. D. datum on same date in—	
					Rise.	Fall.	1930.	1929.
Ganges .. Monghyr ..	6 a.m.	124·60′	0·00′	124·60′	0·40′	..	126·30′	124·20′
Ganges .. Rajmahal ..	6 „ ..	83·20′	0·00′	83·20′	0·15′	..	85·00′	82·70′
Ganges .. Goalundo ..	8-24 „ ..	29·10′	1·409′	30·509′	..	0·20′	25·909′	25·909′
Bhagirathi .. Swarupganj ..	8 a.m. ..	27·57′	0·00′	27·57′	..	0·06′	27·27′	26·72′
Brahmaputra .. Dibrugarh ..	8 a.m. ..	31·10′	*302·70′	333·80′	..	0·30′	335·80′	333·26′
Brahmaputra .. Gauhati ..	....	23·80′	136·958′	160·758′	..	0·50′	157·758′	156·058′
Brahmaputra .. Serajganj ..	12-24 p.m.	40·90′	1·509′	42·409′	..	0·20′	39·109′	39·109′
Dhaleswari .. Sabhar ..	7 a.m. ..	24·50′	0·00′	24·50′	..	0·20′	19·90′	20·70′
Meghna .. Fenchuganj ..	7 a.m. ..	28·00′	1·509′	29·509′	Steady.		28·109′	29·109′
Meghna .. Bhairab Bazar ..	6-24 „ ..	20·42′	1·61′	22·03′	..	0·08′	19·78′	19·19′
Meghna .. Chandpur ..	9-29 „ ..	13·17′	1·61′	14·78′	..	0·08′	11·78′	12·44′
Lakhya .. Narayanganj ..	7 a.m. ..	26·00′	—5·59′	20·41′	..	0·17′	16·12′	16·53′
Madaripur Bil Route .. Takerhat ..	....	16·05′	0·00′	16·05′	Steady.		12·25′	12·60′
Damodar .. Edilpur ..	6 a.m. ..	11·17′	92·58′	103·75′	3·92′	..	100·91′	102·00′

* Zero of gauge has been altered from 24th July 1931.

Statement showing the daily gauge readings of certain rivers at the stations named below for the 20th August 1931.

Name of river and place where readings are taken.	Hour.	Reading on gauge.	Value of zero referred to P. W. D. datum.	Height above P. W. D. datum.	Compared with previous day's height.		Height above P. W. D. datum on same date in—	
					Rise.	Fall.	1930.	1929.
Ganges .. Monghyr ..	6 a.m. ..	124·80′	0·00′	124·80′	0·20′	..	126·40′	124·40′
Ganges .. Rajmahal ..	6 „ ..	83·45′	0·00′	83·45′	0·25′	..	85·20′	82·90′
Ganges .. Goalundo ..	8-24 „ ..	29·10′	1·409′	30·509′	Steady.		26·009′	25·909′
Bhagirathi .. Swarupganj ...	8 a.m. ..	27·41′	0·00	27·41′	..	0·16′	27·25′	26·61′
Brahmaputra .. Dibrugarh ..	8 a.m. ..	31·40′	*302·70′	334·10′	0·30′	..	335·70′	333·66′
Brahmaputra .. Gauhati ..	....	23·80′	136·958′	160·758′	Steady.		157·558′	155·758′
Brahmaputra .. Serajganj ..	12-24 p.m. ..	40·80′	1·509′	42·309′	..	0·10′	39·109′	39·109′
Dhaleswari .. Sabhar ..	7 a.m. ..	24·40′	0·00′	24·40′	..	0·10′	20·00′	20·60′
Meghna .. Fenchuganj ..	7 a.m. ..	27·95′	1·509′	29·459′	..	0·05′	28·059′	29·159′
Meghna .. Bhairab Bazar ..	6-24 „ ..	20·33′	1·61′	21·94′	..	0·08′	19·78′	19·36′
Meghna .. Chandpur ..	10-14 „ ..	13·00′	1·61′	14·61′	..	0·17′	11·86′	12·53′
Lakhya .. Narayanganj ..	7 a.m. ..	25·96′	−5·59′	20·37′	..	0·04′	16·16′	16·66′
Madaripur Bil Route .. Takerhat ..	6-52 p.m. ..	16·10′	0·00′	16·10′	0·05′	..	12·20′	12·60′
Damodar .. Edilpur ..	6 a.m. ..	11·50′	92·58′	104·08′	0·33′	..	100·83′	101·20′

* Zero of gauge has been altered from 24th July 1931.

Statement of weekly gauge readings on the river Ganges at Rampur Boalia for the week ending the 22nd August 1931.

Date.	Hour.	Height of surface above zero of gauge.	Height of surface above P.W.D. datum.	Height of surface above P. W. D. datum on the same date last year.	Remarks.
1931.					
16th August ..	7 a.m.	....	59·65	59·00	The value of zero of gauge =0·00 P. W. D.
17th „ ..	7 „	....	59·80	59·30	
18th „ ..	7 „	....	59·80	59·50	
19th „ ..	7 „	....	59·95	59·70	Zero of gauge referred to B. M. on Rajshahi College step; value 64·73.
20th „ ..	7 „	....	60·15	59·90	
21st „ ..	7 „	....	60·20	60·10	
22nd „ ..	7 „	....	60·20	60·30	

Highest recorded level on 26-8-1879=64·24.
Lowest recorded level on 25·4·1884=32·62.

P. C. Basu, *Subdivisional Officer,*
Irrigation Department, Rajshahi.

Rampur Boalia, *the 22nd August 1931.*

Statement showing the gauge readings at Dacca Waterworks on the river Buriganga for the week ending 22nd August 1931.

Date.	At highest water.		At lowest water.		Commencement of—		Remarks.	
	Time.	Reading.	Time.	Reading.	Ebb tide.	Flow tide.	At 7 a.m.	At 5 p.m.
1931.								
16th August ..							21·6	21·7
17th „ ..							21·7	21·7
18th „ ..							21·6	21·6
19th „ ..	Tide is not perceptible.						21·5	21·4
20th „ ..							21·35	21·3
21st „ ..							21·2	21·1
22nd „ ..							20·95	20·8

B. M. on settling tank 39·49 O. M. S. L. Zero is at O. M. S. L.

Notable high and low water-levels of previous years.

		Taken at high tide.			Taken at low tide.
27th August	1906 ..	70·5	23rd February	1907 ..	51·06
5th September	1909 ..	66·86	13th „	1908 ..	51·06
10th August	1910 ..	69·86	12th March	1912 ..	51·06
1st „	1911 ..	68·46	6th „	1914 ..	50·60
13th „	1912 ..	67·16	22nd February	1915 ..	50·30
31st „	1915 ..	69·7	15th „	1916 ..	50·60
8th „	1916 ..	68·1	3rd March	1917 ..	51·0
12th „	1917 ..	67·1	21st February	1918 ..	51·40
13th „	1918 ..	69·12	26th „	1919 ..	50·4
2nd „	1919 ..	66·8	18th „	1920 ..	50·9
8th September	1920 ..	66·9	19th „	1921 ..	50·9
28th July	1921 ..	68·4	8th March	1922 ..	51·05
10th August	1922 ..	68·00	14th „	1923 ..	50·8
31st July	1923 ..	66·15	16th February	1924 ..	50·50
29th August	1924 ..	68·82	5th March	1925 ..	50·9
8th September	1925 ..	68·52	9th February	1926 ..	2·2
15th August	1926 ..	19·6	27th „	1927 ..	2·10
17th September	1927 ..	18·70	16th „	1928 ..	2·2
22nd August	1928 ..	20·0	21st „	1929 ..	2·0
13th July	1929 ..	17·8	24th „	1930 ..	2·3
12th September	1930 ..	18·65			

N. B.—Zero of the gauge at Dacca Waterworks prior to 11 a.m. on the 8th January 1926= −48·51 with reference to P. W. D. datum.

Zero of the gauge at Dacca Waterworks since 11 a.m. on the 8th January 1926=0·00 with reference to P. W. D. datum.

W. R. Robson, *Executive Engineer,*
Khulna Division.

Khulna, *the 29th August 1931.*

Vital statistics of towns with a population of 50,000 and over of the Bengal Presidency for the week ending Saturday, the 15th August 1931.

District.	No.	Towns.	Population under registration according to Census of 1921.			Births registered.		Deaths registered.																							
			Male.	Female.	Total.	Number registered (excluding still-births).	Still-births registered.	Cholera.	Small-pox.	Plague.	Malaria.	Enteric fever.	Measles	Relapsing fever.	Kala-azar.	Other fevers.	Dysentery.	Diarrhœa.	Influenza.	Pneumonia.	Phthisis.	Other respiratory diseases.	Injuries including suicide.	Deaths from child-birth.	Other causes.	Total of all causes. Male.	Total of all causes. Female.	Total of all causes. Total.	Total of corresponding week of the previous year. Male.	Total of corresponding week of the previous year. Female.	Total of corresponding week of the previous year. Total.
Calcutta ..	1	Calcutta ..	724,248	353,016	1,077,264	498	33	7	..	..	14	24	4	..	6	34	43	37	13	41	43	63	11	2	254	336	260	596	267	239	506
Burdwan ..	2	Asansol Mining Settlement.	176,814	152,539	329,353	163	1	14	..	..	2	..	..	..	..	57	5	..	..	11	1	6	1	1	51	64	85	149	59	65	124
Howrah ..	3	Howrah ..	128,472	66,829	195,301	102	6	1	5	..	3	4	..	..	..	4	10	10	..	10	3	14	4	..	27	49	46	95	39	52	91
Dacca ..	4	Dacca ..	67,333	52,117	119,450	54	8	7	..	..	..	2	..	..	..	4	7	4	..	12	5	8	3	1	17	34	36	70	37	23	60
24-Parganas	5	Bhatpara ..	45,723	19,886	65,609	20	..	4	1	..	1	..	..	..	..	18	..	1	..	2	2	..	..	..	5	19	15	34	9	7	16
24-Parganas	6	Titagarh ..	36,533	15,918	52,451	16	1	..	..	..	..	..	..	..	..	10	..	..	..	1	..	..	..	..	3	11	3	14	7	4	11

R. B. KHAMBATA, M.R.C.S. (ENG.), L.R.C.P. (LOND.), D.P.H. (CAMB.), *Director of Public Health, Bengal (offg.).*

CALCUTTA, *the 24th August 1931.*

Vital statistics of towns with a population of 50,000 and over of the Bengal Presidency for the week ending Saturday, the 22nd August 1931.

District.	No.	Towns.	Population under registration according to Census of 1921.			Births registered.		Deaths registered.																						
			Male.	Female.	Total.	Number registered (excluding stillbirths).	Still-births registered.	Cholera.	Small-pox.	Plague.	Malaria.	Enteric fever.	Measles.	Relapsing fever.	Kala-azar.	Other fevers.	Dysentery.	Diarrhœa.	Influenza.	Pneumonia.	Phthisis.	Other respiratory diseases.	Injuries including suicide.	Deaths from child-birth.	Other causes.	Total of all causes.			Total of corresponding week of the previous year.		
																									Male	Female.	Total.	Male.	Female.	Total.
Calcutta ..	1	Calcutta ..	724,248	353,016	1,077,264	474	48	6	5	..	9	21	1	..	2	33	39	31	13	69	48	36	10	1	223	294	253	547	266	195	461
Burdwan ..	2	Asansol Mining Settlement.	176,814	152,539	329,353	161	1	19	..	..	2	..	..	..	..	61	4	2	..	17	1	4	4	2	72	110	78	188	46	55	101
Howrah ..	3	Howrah ..	128,472	66,829	195,301	99	7	1	..	..	1	2	..	..	..	3	13	4	..	10	6	13	..	..	38	44	17	91	49	35	84
Dacca ..	4	Dacca ..	67,333	52,117	119,450	68	2	3	..	..	1	2	..	..	2	5	3	2	..	5	2	4	1	..	16	34	20	54	32	21	53
24-Parganas	5	Bhatpara ..	45,723	19,886	65,609	10	..	1	0	..	1	..	..	..	1	3	1	2	..	1	..	..	..	..	1	5	12	17	9	7	16
	6	Titagarh ..	36,538	15,918	52,451	9	1	..	..	..	..	..	..	..	..	12	..	..	..	..	..	..	..	..	..	5	7	12	6	5	11

R. B. KHAMBATA, M.R.C.S. (Eng.), L.R.C.P. (Lond.), D.P.H. (Camb.), *Director of Public Health, Bengal (offg.).*

CALCUTTA, *the 28th August 1931.*

Resolution on the Report on the Administration of the Jail Department of the Presidency of Bengal, for the year 1930.

GOVERNMENT OF BENGAL.

Political Department.

Jails.

CALCUTTA, THE 25TH AUGUST 1931.

RESOLUTION—No. 3054 P.J.

Read—

The Report on the Administration of the Jail Department of the Presidency of Bengal for the year 1930.

Read also—

The Reports for the years 1928 and 1929 and resolutions of Government thereon.

1. The most noticeable feature of the year was an abnormal rise in the number of prisoners confined in jails in Bengal, due almost entirely to the admission of persons convicted of offences committed in connection with the Civil Disobedience Movement. At the commencement of the year the total registered accommodation for convicts was 12,698 and that for under-trials 1,080, a total of 13,778. By the month of August, however, the number of convicts had risen to 15,363 and of under-trial prisoners to 2,691. In September, the figures were 16,839 and 2,497, respectively, and in October they rose to 17,267 and 2,576, the total number increased to over 20,000 before any substantial decline began. An extension of jail population by 50 per cent. in the course of a few months had to be dealt with by a department which had for some time past been working to capacity both as regards accommodation and staff, and some idea of the increase in ordinary routine work may be had from the fact that admissions rose from 77,981 to 124,072.

2. The difficulties of adjusting the accommodation available were increased by two factors. The first was the abnormal number of under-trial prisoners, for whereas convicted prisoners can be transferred to special or temporary jails to relieve overcrowding, under-trial prisoners have to remain in that jail most convenient for their production before the Court. In the second place, the introduction of superior divisions in the classification system accorded privileges to a considerable number of convicts which practically doubled the space occupied by each prisoner so classified, and introduced fresh complications in the segregation of different classes of prisoners and the provision of suitable accommodation for the superior classes.

3. In the circumstances, the department was forced to undertake an extensive and costly programme to provide additional accommodation. This was done by utilising existing jail buildings to the fullest possible extent and by the adaptation of suitable buildings which were converted into special jails at Dum Dum, Berhampore and Hijli. The necessary staff had also to be found, and very largely improvised as need arose, as the department had no reserves of any kind for the purpose. In spite of these difficulties the problem was resolutely tackled and the original registered accommodation of 13,778 was increased to 15,130 in August, to 16,173 in September, to 18,051 in October and at the commencement of the year 1931, further additional accommodation for 2,000 with room for expansion to 4,000 had been completed, with the result that in spite of a continued and steady rise in the jail population overcrowding showed a progressive decline from the month of August onwards.

4. Under these abnormal conditions less satisfactory figures regarding the physical well-being of prisoners might have been expected, but whereas in the previous year the Governor in Council had occasion to notice with approbation the decrease in the death-rate per mille which for the year 1929 reached the low figure of 12·2, yet in the year under review, not only has this record been maintained, but a further substantial drop has been secured to the lowest figure ever recorded in this province, namely, 9·3 per mille.

5. As a result of the increase of population the department had to incur an expenditure of over Rs. 7½ lakhs in excess of the expenditure of the previous year for guarding and maintaining prisoners, while it is estimated that special diet, clothing and bedding of prisoners in the superior divisions cost over Rs. 3½ lakhs, and sums amounting to over Rs. 3½ lakhs were incurred in providing additional accommodation and for the conversion of buildings.

6. In so abnormal a year comments on criminal statistics from the jails, and on such subjects as long detention of under-trial prisoners, short sentences, and the treatment of young offenders, must be made with due regard to the peculiar conditions and the abnormal amount of work with which the police and the Courts had to contend. Two very undesirable features, however, from the point of view of this department still appear with distressing prominence, namely, the very large number of young persons sent to jail, and the unduly long detention of prisoners awaiting trial. These features have on numerous previous occasions been commented upon in these resolutions and must once more be brought to the notice of the Judicial Department.

7. It is unfortunately almost impossible to effect any steady and progressive improvement in the contribution to the reduction of crime, which our jails as part of the anti-criminal system ought to make, so long as the department is subjected to recurring floods of prisoners of a class with which it is neither designed to deal nor organised to receive. The abnormal expenditure arising out of the Civil Disobedience Movement coupled with other factors making for financial stringency, must, it is feared, cause still further postponement of schemes for the proper training of prison officials and warders, improvements in design and accommodation, and attempts to provide educational facilities to suitable classes of prisoners, which form the foundations of progress, and for which the Inspector-General with the support of the department has pressed for so long.

8. There are, however, at least two points which may be regarded with interest by students of penology in Bengal. The one is the very encouraging progress made by the Borstal Institution at Bankura for which the credit must be given, firstly, to the late Colonel N. S. Simpson, I.M.S., to whose constant and expert supervision the Institution owes so much, and, secondly, to the Superintendent and his staff ably supported by a Managing Committee who have taken a natural and gratifying interest in the development of this truly constructive work. The other is, perhaps, the amendment of the rules making better provision for the moral instruction of prisoners in jails. The scheme is admittedly tentative and experimental in its present form and is dependent for its success and future expansion on suitable workers presenting themselves for the duties. If sincere and earnest workers are forthcoming it is hoped that the scheme will be found to exert a beneficial influence in our jails.

9. The work of the manufactory departments likewise suffered from the general disorganisation of jail routine. It is unfortunate that the Indian Stores Department has been unable to furnish the department with orders, while outside orders generally have been affected by the political situation and trade depression. Excellent work was, however, done in supplying the large amounts of extra clothing equipment and furniture required by the department in dealing with the abnormal excess population.

10 From the commencement of the Civil Disobedience Movement early in the year a section of the Press published a stream of false information regarding the treatment of prisoners in the jails of the province. Articles, however, of an instructed character containing constructive comment on the work of the jails as part of an anti-criminal system remained conspicuous by their absence, and the interest of the general public in what is commonly called "the ordinary convict" appears to remain at an extremely low level.

The campaign of malicious calumny directed against the department and its officers had its logical sequel in the assassination of the late Colonel N. S. Simpson, I.M.S., Inspector-General of Prisons, Bengal, by three heavily armed revolutionists, who, entering his room together, shot him as he sat at his desk.

In Colonel Simpson's death the department lost the services of a devoted and eminently humane officer who had added to his qualifications in the medical profession a profound study of the problems of penology presented by the jails of Bengal. Had he lived there can be very little doubt that despite financial and other difficulties he would have left a very definite mark on the work of the department by the development, adaptation, and application to its needs of up-to-date and enlightened methods. Colonel Simpson was born in India and had devoted his energies and undoubted talents from youth up to the relief of the suffering and the healing of the sick, in body and in soul, of the country

which gave him birth and in whose service he was finally to lay down his life. As his successor rightly remarks the crime was viewed with indignation and horror by civilised communities in India and the world at large To a section of Hindu opinion in Bengal has been left the distinction of expressing greater admiration and sympathy for the murderers than for the able and faithful public servant whom they destroyed.

The Superintendents and their staffs were subjected to a continuous and heavy strain throughout the year and were called upon in exceptional degree to exhibit the qualities of patience and of tact. The Governor in Council has, therefore, read with the greater pleasure the names of those officers of whom the Inspector-General has found it possible to make special mention in his report.

Order.—Ordered that a copy of this resolution be forwarded to the Inspector-General of Prisons, Bengal, for information and guidance.

Ordered that a copy of this resolution and a copy of the report be submitted to the Government of India in the Home Department.

Ordered also that the resolution be published in the *Calcutta Gazette*.

By order of the Governor in Council,

R. N. REID,

Chief Secy. to the Govt. of Bengal (offg.).

Printed at the Bengal Government Press, Alipore, and published by the Bengal Secretariat Book Depot, Writers' Buildings, in the City of Calcutta, on the 3rd September 1931.

Registered No. C207 *No. 37 of 1931*

The Calcutta Gazette

THURSDAY, SEPTEMBER 10, 1931.

CONTENTS:

	PAGE.
PART I.—Orders and Notifications by the Governor of Bengal, the Government of Bengal, the High Court, Government Treasury, etc.	1075—1092
PART IA.—Orders and Notifications by the Government of India republished for general information	235—237
PART IB.—Educational Notices ..	893—900
PART II.—Advertisements	835—859
PART III.—Acts of the Bengal Legislative Council	*Nil*
PART IV.—Bills introduced in the Bengal Legislative Council, Reports of Select Committees presented or to be presented to that Council, and Bills published before introduction in that Council ..	*Nil*
PART V.—Acts of the Indian Legislature assented to by the Governor General and Ordinances promulgated under section 72 of the Government of India Act ..	*Nil*
PART VI.—Bills introduced in the Council of State and Legislative Assembly, Reports of Select Committees presented to the Council and Assembly and Bills published under Rule 18 of the Indian Legislative Rules	*Nil*
SUPPLEMENT No. 37—	
Cotton Ginning and Pressing—Return of Vital Statistics—Weekly gauge-readings—Weekly Weather and Crop Report—Daily gauge-readings ..	1143—1162
Final Forecast of the Jute Crop, 1931 ..	1163—1174

Part I

Orders and Notifications by the Governor of Bengal, the Government of Bengal, the High Court, Government Treasury, etc.

ORDERS BY THE GOVERNMENT OF BENGAL.

No. 8019A.

Appointments and Transfers.

GENERAL.

Burdwan Divn.—No. 7925A.—2nd September 1931.—Babu Sisir Kumar Har, Sub-Deputy Collector, on leave, is posted temporarily to the Burdwan Division.

Presy. Divn.—No. 7943A.—3rd September 1931.—Babu Satish Chandra Basu, Sub-Deputy Collector, on leave, is posted to the Presidency Division.

Dacca Divn. - Hooghly - Burdwan - Howrah-Murshidabad-Nadia.—No. 7969A.—4th September 1931.—The Sub-Deputy Collectors, named below, are transferred to the Dacca Division:—

Babu Nirmal Kumar Sen, Hooghly.

Babu Amar Nath Mukharji, Burdwan.

Babu Jatindra Krishna Ghosh, Howrah.

Babu Atindra Nath Mukharji, Murshidabad.

Maulvi Habibur Rahman, Meherpur, Nadia.

Pabna-Chittagong Divn.—No. 7973A.—4th September 1931. — Maulvi Tasmimuddin Ahmad, Sub-Deputy Collector, Pabna, is transferred to the Chittagong Division.

Mymensingh-Presy. Divn.—No. 7976A.—4th September 1931.—Babu Gyan Chandra Chakrabatti, Sub-Deputy Collector, Tangail, Mymensingh, is transferred to the Presidency Division.

Burdwan Divn. - Dacca - Bakarganj - Mymensingh.—No. 7979A.—4th September 1931.—The Sub-Deputy Collectors, named below, are transferred to the Burdwan Division:—

Maulvi Muhammad Abdul Khaliq, Manikganj, Dacca.

Babu Sridhar Mazumdar, Bakarganj.

Maulvi Khurshed Ali, Tangail, Mymensingh.

POLICE.

Dacca.—No. 7937A.—3rd September 1931.—Mr. J. H. C. Cowgill, Assistant Superintendent of Police, Narayanganj, Dacca, is appointed temporarily to act, in addition to his own duties, as Superintendent of the River Police, Narayanganj.

ECCLESIASTICAL.

Calcutta.—No. 7940A.—3rd September 1931.—The services of the Reverend I. J. Gash, Chaplain of St. Thomas' Church, Calcutta, are placed at the disposal of the Government of the United Provinces, with effect from the 19th October 1931, or any subsequent date on which he may be relieved.

Leave.

GENERAL.

Bogra.—No. 7906A.—The orders of the 25th July 1931, granting leave to Babu Suresh Chandra Guha Thakurta, Deputy Magistrate and Deputy Collector, Bogra, are cancelled.

Tippera.—No. 7928A.—2nd September 1931.—Babu Phanindra Nath Mukharji, Deputy Magistrate and Deputy Collector, Tippera, was on leave on average pay up to the 3rd August 1931, under rule 81 (*b*) (*ii*) of the Fundamental Rules, in extension of the leave granted to him under the orders of the 24th February 1931.

POLICE.

Dacca.—No. 7915A.—1st September 1931.—Mr. E. B. Ellison, officiating Additional Superintendent of Police, Dacca, is allowed leave on average pay for sixteen days, under rule 81 (*b*) (*i*) of the Fundamental Rules, with effect from the 25th August 1931.

Mymensingh.—No. 7946A.—3rd September 1931.—In modification of the orders of the 29th July 1931, Mr. L. N. Bavin, Superintendent of Police, Mymensingh, is allowed leave for seven months, viz., leave on average pay for three months and sixteen days, under rule 81 (*b*) (*i*) of the Fundamental Rules, with effect from the 2nd September 1931, or any subsequent date on which he may be relieved, and leave on half average pay for the remaining period, under dule 81 (*d*) of those Rules.

R. N. REID,
Chief Secy. to the Govt. of Bengal (offg.).

POLITICAL DEPARTMENT.

Political.

NOTIFICATIONS

No. 14798P.—2nd September 1931.—In exercise of the power conferred by section 99A of the Code of Criminal Procedure, 1898 (Act V of 1898), the Governor in Council hereby declares to be forfeited to His Majesty all copies, wherever found, of a pamphlet in Bengali entitled "Nawabgunge Juva Sammilani Abhibhashan" (Nawabgunge Youth Conference Address) containing the presidential address of Pramatha Nath Banerji, which was printed by Satindra Nath Mukherji at the Srigauranga Press, 71/1, Mirzapur Street, Calcutta, on the ground that the said pamphlet contains matter which brings or attempts to bring into hatred or contempt and excites or attempts to excite disaffection towards the Government established by law in British India, the publication of which is punishable under section 124A of the Indian Penal Code.

No. 14951P.—3rd September 1931.—In exercise of the power conferred by section 99A of the Code of Criminal Procedure, 1898 (Act V of 1898), the Governor in Council hereby declares to be forfeited to His Majesty all copies, wherever found, of a Bengali pamphlet entitled "Tarun Suhid—Dinesh Gupter Patrabali" printed at the Palli Chitra Machine Press by Srijukta Lakshmi Priya Devi and published by her from Bagerhat, on the ground that the said pamphlet contains matter which brings or attempts to bring into hatred or contempt and excites or attempts to excite disaffection towards the Government established by law in British India, the publication of which is punishable under section 124A of the Indian Penal Code.

Jails.

NOTIFICATION.

Calcutta.—No. 3196P.J.—4th September 1931.—Babu Kiran Chandra Sen Gupta, Assistant Manager, Jail Depôt, Calcutta, is appointed, on probation, to be Manager of that depôt, with effect from the 1st September 1931, *vice* Rai Sahib Noni Lal Mukherji, retired.

R. N. REID,
Chief Secy. to the Govt. of Bengal (offg.).

POLICE DEPARTMENT.

NOTIFICATIONS.

No. 3924Pl.—2nd September 1931.—The following draft of an amendment which, in exercise of the power conferred by section 101 of the Bengal Village Self-Government Act, 1919 (Bengal Act V of 1919), the Governor in Council proposes to make in the rules published under notification No. 2197P.J., dated the 21st May 1920, is hereby published for the information of persons likely to be affected thereby.

2. The draft will be taken into consideration on or after the 10th October 1931, and any objection or suggestion with regard thereto received by the undersigned before that date will be duly considered:—

Draft amendment.

Insert the following as rule 12 (*l*) in Part III of the said rules:—

"12 (*l*). No dafadar or chaukidar shall resign his post or withdraw from the duties of his office unless he has given to the President one month's notice in writing of his intention to do so."

Malda.—No. 3946Pl.—3rd September 1931.—In exercise of the power conferred by section 4 (*l*) (*s*) of the Code of Criminal Procedure, 1898 (Act V of 1898), and in modification of all previous notifications published in the *Calcutta Gazette* relating to the area included in the police-station Nachole in the district of Malda and to the boundaries of that area, the Governor in Council is pleased to declare that the village specified in the following schedule, which has hitherto been included in that police-station, shall be included in the police-station Shibganj in the same district:—

Schedule.

Name of village	General jurisdiction list number of thana Nawabganj, police-station Nachole.
Modhyam Chari Mirzapur ..	It is a portion of village Chari Mirzapur bearing jurisdiction list No. 8 of thana Nawabganj lying on the west of the Mohananda river.

Tippera.—No. 4012Pl.—5th September 1931.—In exercise of the power conferred by section 2 of the Bengal Public Gambling Act, 1867 (Bengal Act II of 1867), the Governor in Council is pleased to extend all the sections of the said Act (except section 13 which already applies) to the whole of the mauzas mentioned below, within the police-station Debidwar in the Sadar subdivision of the Tippera district:—

Name of mauza.	Jurisdiction list No.
West Aliabad ...	80
Bhinglabari ...	81

R. N. REID,
Chief Secy. to the Govt. of Bengal (offg.).

JUDICIAL DEPARTMENT.

Appointments and Transfers.

Rangpur.—No. 6510J.—3rd September 1931.—In exercise of the powers conferred by sections 14 and 15 and the proviso to section 357 of the Code of Criminal Procedure, 1898 (Act V of 1898), the Governor in Council is pleased—

(*a*) to confer upon Babu Jogesh Chandra Roy Chaudhuri the powers of a Magistrate of the first class, in the district of Rangpur, for a period of three years from the 3rd October 1931, in respect to such cases as may be made over to him within the limits of the Kurigaon subdivision of the said district,

(*b*) to direct that he shall, in addition to sitting singly, sit as a member of the Kurigaon bench in the said district, and

(*c*) to direct him to take down evidence in the English language.

24-Parganas.—No. 6514J.—3rd September 1931.—In exercise of the powers conferred by sections 14 and 15 and the proviso to section 357 of the Code of Criminal Procedure, 1898 (Act V of 1898), the Governor in Council is pleased—

(*a*) to confer upon Rai Shyama Charan Bhattacharji Bahadur the powers of a Magistrate of the first class, in the district of the 24-Parganas, for a period of three years from the 5th September 1931, in respect to such cases as may be made over to him within the limits of the Barrackpore subdivision of the said district.

(*b*) to direct that he shall, in addition to sitting singly, sit as a member of the Bhatpara bench in the said district, and

(*c*) to direct him to take down evidence in the English language.

NOTIFICATIONS.

Nadia.—No. 6493J.—2nd September 1931.—In exercise of the power conferred by section 65 of the Bengal Village Self-Government Act, 1919 (Bengal Act V of 1919), the Governor in Council is pleased to appoint Munshi Fakir Mahammad Mridha, a member of the Dogachi union board within the Krishnagar police-station in the Sadar subdivision of the Nadia district, to be, during his term of office as such member, a member of the union bench within the jurisdiction of the said union board for the purposes of that section, *vice* Munshi Uzirali Mallik, deceased.

Nadia.—No. 6494J.—2nd September 1931.—In exercise of the power conferred by section 73 of the Bengal Village Self-Government Act, 1919 (Bengal Act V of 1919), the Governor in Council is pleased to appoint Munshi Fakir Mahammad Mridha, a member of the Dogachi union board within the Krishnagar police-station in the Sadar subdivision of the Nadia district, to be, during his term of office as such member, a member of the union court within the jurisdiction of the said union board for the purposes of that section, *vice* Munshi Uzirali Mallik, deceased.

Burdwan.—No. 6496J. — 2nd September 1931.—In exercise of the power conferred by section 65 of the Bengal Village Self-Government Act, 1919 (Bengal Act V of 1919), the Governor in Council is pleased to appoint Maulvi Daudar Rahman, a member of the Kusumgram union board within the Monteswar police-station in the Kalna subdivision of the Burdwan district, to be, during his term of office as such member, a member of the union bench within the jurisdiction of the said union board for the purposes of that section, *vice* Munshi Muhammad Musha Khan, deceased.

Burdwan.—No. 6497J. — 2nd September 1931.—In exercise of the power conferred by section 73 of the Bengal Village Self-Government Act, 1919 (Bengal Act V of 1919), the Governor in Council is pleased to appoint Maulvi Daudar Rahman, a member of the Kusumgram union board within the Monteswar police-station in the Kalna subdivision of the Burdwan district, to be, during his term of office as such member, a member of the union court within the jurisdiction of the said union board for the purposes of that section, *vice* Munshi Muhammad Musha Khan, deceased.

Bankura.—No. 6507J. — 3rd September 1931.—In exercise of the power conferred by section 65 of the Bengal Village Self-Government Act, 1919 (Bengal Act V of 1919), the Governor in Council is pleased to appoint Babu Nagendra Nath Bakshi, a member of the Chhatna union board within the Chhatna police-station in the Sadar subdivision of the Bankura district, to be, during his term of office as such member, a member of the union bench within the jurisdiction of the said union board for the purposes of that section.

Bankura.—No. 6508J. — 3rd September 1931.—In exercise of the power conferred by section 73 of the Bengal Village Self-Government Act, 1919 (Bengal Act V of 1919), the Governor in Council is pleased to appoint Babu Nagendra Nath Bakshi, a member of the Chhatna union board within the Chhatna police-station in the Sadar subdivision of the Bankura district, to be, during his term of office as such member, a member of the union court within the jurisdiction of the said union board for the purposes of that section.

J. W. NELSON,
Secy. to the Govt. of Bengal.

LOCAL SELF-GOVERNMENT DEPARTMENT.

NOTIFICATIONS.

Minister-in-charge: The Hon'ble Mr. Bijoy Prasad Singh Roy.

24-Parganas.—No. 3372M.—28th August 1931.—In exercise of the power conferred by section 14 of the Bengal Municipal Act, 1884 (Bengal Act III of 1884), the Government of Bengal (Ministry of Local Self-Government) are pleased to appoint the following gentlemen to be Commissioners of the Panihati Municipality, in the district of the 24-Parganas:—

Babu Sunit Kumar Banerji.
Maulvi Mohamed Kala Chand.
Babu Anadi Nath Chatarji.

Bogra.—No. 3374M.—28th August 1931.—In exercise of the power conferred by section 14 of the Bengal Municipal Act, 1884 (Bengal Act III of 1884), the Government of Bengal (Ministry of Local Self-Government) are pleased to appoint the following gentlemen to be Commissioners of the Sherpur Municipality, in the district of Bogra:—

Babu Bono Behari Shaha.
Babu Devendra Kishore Tarafdar.
Munshi Muhammad Raisuddin Sardar.
Maulvi Mir Abdus Samad.

Mymensingh.—No. 3408M.—29th August 1931.—In exercise of the power conferred by clause (*a*) of section 59 of the Bengal Municipal Act, 1884 (Bengal Act III of 1884), the Government of Bengal (Ministry of Local Self-Government) are pleased to approve the resolution passed by the Commissioners of the Tangail Municipality in the district of Mymensingh under section 23 of that Act, electing Babu Jogendra Nath Mazumdar to be their Chairman.

Nadia.—No. 3410M.—29th August 1931.—In exercise of the power conferred by section 14 of the Bengal Municipal Act, 1884 (Bengal Act III of 1884), the Government of Bengal (Ministry of Local Self-Government) are pleased to appoint the following gentlemen to be Commissioners of the Kumarkhali Municipality, in the district of Nadia:—

Dr. Rebati Mohan Saha, M.B.

Babu Purna Chandra Biswas.

Maulvi Muhammad Majibar Rahaman.

Munshi Muhammad Abdul Latif Meah.

K. M. Golam Sarrwar.

Bakarganj.—No. 3412M. — 29th August 1931.—In exercise of the power conferred by clause (*a*) of section 59 of the Bengal Municipal Act, 1884 (Bengal Act III of 1884), the Government of Bengal (Ministry of Local Self-Government) are pleased to approve the resolution passed by the Commissioners of the Jhalakati Municipality in the district of Bakarganj under section 23 of that Act, electing Babu Aswini Kumar Das to be their Chairman.

Mymensingh. — No. 3450L.S.-G. — 31st August 1931.—In exercise of the power conferred by clauses (*a*) and (*b*) of section 31 of the Cattle Trespass Act, 1871 (Act I of 1871), and in modification of the orders contained in clauses (*a*) and (*b*) of notification No. 317½-T.M., dated the 16th August 1913, and in clauses (*a*) and (*b*) of notification No. 1428-L.S.-G., dated the 18th May 1914, the Government of Bengal (Ministry of Local Self-Government) are pleased to—

(*i*) transfer to the union board in the district of Mymensingh named below all the functions of the Magistrate of that district under Chapters II and III of the said Act I of 1871, in respect of the pounds within the jurisdiction of the said union board; and

(*ii*) direct that the whole of the surplus accruing under section 18 of the said Act I of 1871 in the area under the jurisdiction of the union board in the district of Mymensingh named below shall be placed to the credit of the union fund constituted for the said union board:—

Netrakona subdivision.

Name of union—Balasimul.

Police-station—Kendua.

Dinajpur.—No. 3490M. — 2nd September 1931.—In exercise of the power conferred by section 14 of the Bengal Municipal Act, 1884 (Bengal Act III of 1884), the Government of Bengal (Ministry of Local Self-Government) are pleased to appoint the following gentlemen to be Commissioners of the Dinajpur Municipality:—

Civil Surgeon, Dinajpur (*ex-officio*).
Mr. A. P. Peters.
Babu Durga Kamal Sen.
Babu Purnendu Narayan Roy.
Maulvi Muhammad Solaiman.
Maulvi Nasiruddin Ahmed Choudhuri.
Maulvi Choudhuri Muhammad Isa.

No. 3561L.S.-G.—8th September 1931.—The following draft of a notification, which the Government of Bengal (Ministry of Local-Self Government) propose to issue under the Bengal Local Self-Government Act of 1885 (Bengal Act III of 1885), is published for the information of persons likely to be affected thereby.

2. The draft will be taken into consideration on the 27th October 1931, and any objection or suggestion which may be received by the undersigned through the District Magistrate before that date will be duly considered :—

Draft.

In exercise of the powers conferred by clauses (*l*) and (*m*) of section 138 of the Bengal Local Self-Government Act, 1885 (Bengal Act III of 1885), the Government of Bengal (Ministry of Local Self-Government) are pleased to make the following amendments in the rules published with notification No. 3334L.S.-G., dated the 20th December 1901, at page 293 of Part IB of the *Calcutta Gazette* of the 25th idem, as subsequently amended :—

For clauses (*a*), (*b*) and (*c*) of rule 57, *substitute* the following:—

(*a*) All projects for new works, the estimated cost of which amounts to Rs. 50,000 or more.	Approval of the Local Government in the Public Works Department to be obtained through the Inspector of Local Works and the Commissioner of the Division.
(*b*) All projects for construction or reconstruction of bridges over, or for works which may affect or alter the course of, any river which is navigable at any time of the year, or in either bank of which there is any public embankment.	Approval of the Local Government in the Irrigation Department to be obtained through the Superintending Engineer, Irrigation Department, and the Commissioner of the Division.
(*c*) All projects for embanked roads which are liable seriously to affect the drainage or irrigation of any considerable tract of country.	Ditto.

24-Parganas.—No. 3497M.—3rd September 1931.—In exercise of the power conferred by section 17 of the Bengal Municipal Act, 1884 (Bengal Act III of 1884), the Government of Bengal (Ministry of Local Self-Government) are pleased to remove the name of the Baruipore Municipality, in the district of the 24-Parganas, from the first schedule of the Act, with effect from 1st April 1932.

2. In exercise of the power conferred by sub-section (*4*) of section 23 of the said Act, the Government of Bengal (Ministry of Local Self-Government) are further pleased to remove the name of the said municipality from the second schedule of that Act, with effect from the said date.

3. This cancels notification No. 3154M., dated the 14th August 1931.

CORRIGENDA.

Minister-in-charge: The Hon'ble Mr. Bijoy Prasad Singh Roy.

Mymensingh. — No. 3448L.S.-G. — 31st August 1931.—In the table appended to notification No. 340L.S.-G., dated the 28th January 1925, establishing certain union boards in the district of Mymensingh, published at pages 297-306 of Part I of the *Calcutta Gazette*, Extraordinary, dated the 26th February 1925, make the following correction:—

Page 301, column 3 of the table showing the names of unions, *read* "Lauhati" *for* "Dariapur."

No. 3523M.—3rd September 1931. — In Government notification No. 2353M., dated the 19th June 1931, published at page 730 of Part I of the *Calcutta Gazette*, dated the 25th June 1931, *for* "Dr. Basanta Kumar Basu" and "Babu Kalidas Balakar" *read* "Dr. Basanta Kumar Banerjee" and "Babu Kali Das Malakar," respectively.

Medical.

Minister-in-charge: The Hon'ble Mr. Bijoy Prasad Singh Roy.

No. 2746Medl.—3rd September 1931.—Dr. Bama Charan Karmakar, Assistant Surgeon, is granted leave on average pay for two months, under rule 81 (*b*) (*ii*) of the Fundamental Rules, in extension of the leave granted to him in notification No. 2245Medl., dated the 16th July 1931.

Calcutta-Dinajpur.—No. 2747Medl. — 3rd September 1931.—Harendra Nath Bose (Captain, A.I.R.O.) on supernumerary duty at the Medical College Hospitals, Calcutta, is appointed as Assistant Surgeon, Dinajpur Sadar, *vice* Dr. Bama Charan Karmakar.

ADDENDUM.

Minister-in-charge: The Hon'ble Mr. Bijoy Prasad Singh Roy.

Calcutta.—No. 2713Medl.—2nd September 1931.—In Government resolution No. 2113-Medl., dated the 9th July 1931, reconstituting the visiting committee for the Medical College group of hospitals, Calcutta, *add* the following to the list of members:—

(23) Mr. J. H. Burder, representative of the Bengal Chamber of Commerce.

(24) Babu Babulal Shroff, representative of the Marwari Chamber of Commerce.

C. W. GUARNER,
Secy. to the Govt. of Bengal.

EDUCATION DEPARTMENT.

NOTIFICATION.

Minister-in-charge: The Hon'ble Mr. K. Nazim-ud-Din, C.I.E.

Howrah.—No. 755T.Edn.—3rd September 1931.—Mr. J. Riffkin, Professor of Mechanical Engineering, Bengal Engineering College, is appointed to act as Secretary to the Board of School Final Examination, Science Side, and also as Inspector of "B" Classes, for the period from the 6th August to the 1st November 1931 (both days inclusive).

A. J. DASH,
Secy. to the Govt. of Bengal.

Orders by the Director of Public Instruction, Bengal.

BENGAL EDUCATIONAL SERVICE.

Dacca.—No. 29B.—27th August 1931.—Babu Padmini Bhusan Rudra, Professor, Dacca Intermediate College, in the Bengal Educational Service, is declared, in terms of rule 81 (*b*) (*ii*) read with rule 82 (*b*) of the Fundamental Rules, to have been on leave on average pay for seventeen days, with effect from the 3rd August 1931.

He was permitted to prefix to his leave Sunday, the 2nd August 1931.

Nadia.—No. 30B.—31st August 1931.—Maulvi Omdatul Islam, Lecturer in Mathematics, Krishnagar College, now officiating Professor, in the Bengal Educational Service, of that College, is granted, in terms of the proviso to rule 81 (*b*) (*ii*) of the Fundamental Rules, leave on average pay, on medical certificate, for two months, with effect from the 3rd August 1931.

2. He is permitted to prefix to his leave Sunday, the 2nd August 1931.

J. M. BOTTOMLEY,
Director of Public Instrn., Bengal (offg.).

Orders by the Inspector-General of Registration, Bengal.

[To be substituted for the notification bearing the same number and date.]

Bankura.—No. 583.—28th August 1931.—Maulvi Saiyid Dilwar Ali Mirza, Sub-Registrar of Sonamukhi, in the district of Bankura, is allowed leave on average pay for one month, under rule 81 (*b*) (*ii*) of the Fundamental Rules, with effect from the 28th August 1931.

Bakarganj-Dacca.—No. 593.—3rd September 1931.—Babu Bhupendra Narayan Rakshit, Probationary Sub-Registrar of Dacca, is appointed to act as Joint Sub-Registrar of Gournadi at Bamrail, in the district of Bakarganj, with effect from the 7th April 1931, or until further orders.

Bakarganj.—No. 594.—3rd September 1931. —This department notification No. 162, dated the 6th March 1931, appointing Maulvi Serajul Huq Chaudhury, Sub-Registrar of Barhanuddin Havildar's Hat, in the district of Bakarganj, as Sub-Registrar of Rahmatpur in the same district, is cancelled.

Bakarganj.—No. 595.—3rd September 1931. This department notification No. 163, dated the 6th March 1931, appointing Babu Nikunja Bihari Sen Gupta, Sub-Registrar of Radhaballav, in the district of Bakarganj, as Sub-Registrar of Barhanuddin Havildar's Hat in the same district, is cancelled.

Bakarganj.—No. 596.—3rd September 1931. —Babu Surendra Lal Dutta, Sub-Registrar, on leave, is appointed to be Sub-Registrar of Rahmatpur, in the district of Bakarganj.

Dacca.—No. 597.—5th September 1931.—Maulvi Alauddin Ahmad, Sub-Registrar of Serajdikhan, in the district of Dacca, is appointed to be Sub-Registrar of Sreenagar in the same district.

Dacca.—No. 598.—5th September 1931.—Maulvi Khwaja Muhammad Salim, Sub-Registrar attached to Dacca, on leave, is appointed to be Sub-Registrar of Serajdikhan in the same district.

Dacca.—No. 599.—5th September 1931.—Maulvi Qazi Abdul Majid, Sub-Registrar of Sreenagar, in the district of Dacca, on leave, is appointed to be Sub-Registrar of Barangail in the same district.

Dacca.—No. 600.—5th September 1931.—This department notification No. 460, dated the 13th July 1931, appointing Babu Rabindra Lal Acharya, Sub-Registrar attached to Dacca, as Sub-Registrar of Rupganj in the same district, is cancelled.

Dacca.—No. 601.—5th September 1931.—This department notification No. 461, dated the 13th July 1931, appointing Babu Suresh Chandra Ray, Sub-Registrar of Raupganj, in the district of Dacca, as Sub-Registrar of Manikganj in the same district is cancelled.

Dacca-Faridpur.—No. 602.—5th September 1931.—This department notification No. 462, dated the 13th July 1931, appointing Babu Prafulla Chandra Sen, No. I, Sub-Registrar of Manikganj in the district of Dacca, as Sub-Registrar of Kotalipara, in the district of Faridpur, is cancelled.

Bakarganj-Dacca.—No. 603.—5th September 1931.—This department notification No. 417, dated the 19th June 1931, appointing Maulvi Khwaja Muhammad Salim, Sub-Registrar attached to Dacca, as Sub-Registrar of Betagi, in the district of Bakarganj, is cancelled.

Bakarganj.—No. 604. —. 5th September 1931.—This department notification No. 416, dated the 19th June 1931, appointing Maulvi Anwar Ali, Sub-Registrar of Betgai, in the district of Bakarganj, as Joint Sub-Registrar of Gaurnadi at Bamrail in the same district, is cancelled.

S. AHMED,
Inspector-General of Regn., Bengal.

PUBLIC WORKS DEPARTMENT.

Establishment.

NOTIFICATION.

Minister-in-charge: The Hon'ble Khan Bahadur Maulvi K. G. M. Faroqui.

No. 53.—2nd September 1931.—Babu Ram Nath Chatarji, Assistant Engineer, who was posted to the Northern Circle in Bengal Government notification No. 45, dated the 29th July 1931, joined the Darjeeling Division on the 11th August 1931.

L. R. FAWCUS,
Secy. to the Govt. of Bengal.

DEPARTMENT OF AGRICULTURE AND INDUSTRIES.

Veterinary.

NOTIFICATION.

Minister-in-charge: The Hon'ble Khan Bahadur Maulvi K. G. M. Faroqui.

No. 4028Vety.—1st September 1931.—Babu Girindra Nath Chatarji, Lecturer, Bengal Veterinary College, is allowed leave on average pay for six months (entirely on account of privilege leave at his credit), under rule 81 (*b*) (*ii*) of the Fundamental Rules and the note thereunder, with effect from the 24th September 1931, or any subsequent date on which he may avail himself of it.

L. R. FAWCUS,
Secy. to the Govt. of Bengal.

Orders by the Registrar of Co-operative Societies, Bengal.

No. 15-L.—1st September 1931.—Whereas I am of opinion, as the result of an enquiry held into the constitution, working and financial condition of the Chakpara Ghosh Co-operative Society (registered No. 469 of 1909), in the subdivision Rampurhat in the district of Birbhum, under sub-section (*1*) of section 35 of the Co-operative Societies Act, II of 1912, that the society ought to be dissolved.

Now, therefore, in exercise of the power conferred by sub-section (*1*) of section 39 of the same Act, I hereby cancel the registration of the said society.

And further, in exercise of the power conferred by sub-section (*1*) of section 42 of the same Act, I hereby appoint the departmental officer-in-charge of Rampurhat Circle to be liquidator of the said society.

No. 16-L.—1st September 1931.—Whereas I am of opinion, as the result of an enquiry held into the constitution, working and financial condition of the Chakbila Co-operative Bank (registered No. 281 of 1927), in the subdivision Sadar in the district of Bogra, under sub-section (*1*) of section 35 of the Co-operative Societies Act, II of 1912, that the society ought to be dissolved.

Now, therefore, in exercise of the power conferred by sub-section (*1*) of section 39 of the same Act, I hereby cancel the registration of the said society.

And further, in exercise of the power conferred by sub-section (*1*) of section 42 of the same Act, I hereby appoint the Inspector of Co-operative Societies, Bogra, to be liquidator of the said society.

No. 17-L.—1st September 1931.—Whereas I am of opinion, as the result of an enquiry held into the constitution, working and financial condition of the Nimkuri Co-operative Bank (registered No. 18 of 1923), in the subdivision Sadar in the district of Bogra, under sub-section (*1*) of section 35 of the Co-operative Societies Act, II of 1912, that the society ought to be dissolved.

Now, therefore, in exercise of the power conferred by sub-section (*1*) of section 39 of the same Act, I hereby cancel the registration of the said society.

And further, in exercise of the power conferred by sub-section (*1*) of section 42 of the same Act, I hereby appoint the Inspector of Co-operative Societies, Bogra, to be liquidator of the said society.

S. K. GANGULY,
Regr., Co-operative Societies, Bengal.

REVENUE DEPARTMENT.

Land Revenue.

NOTIFICATIONS.

24-Parganas.—No. 110191.L.R.—1st September 1931.—In exercise of the powers conferred by section 101 (*2*) (*d*) of the Bengal Tenancy Act, 1885 (Act VIII of 1885), the Governor in Council is pleased to order that a survey shall be made and a record-of-rights prepared in respect of all lands which are comprised in the following temporarily-settled private estates of the 24-Parganas Collectorate and situated in the district of the 24-Parganas:—

1. Sundarban Abadkari Taluk lot No. 53, settled under rule of 1853. Tauzi No. 1437.
2. Sundarban Abadkari Taluk lot No. 55, Abad Sreedharpur, settled under rule of 1853. Tauzi No. 1484.
3. Sundarban Abadkari Taluk lot No. 55, Haiderabad, settled under rule of 1853. Tauzi No. 1482.
4. Sundarban Abadkari Taluk lot No. 55, settled under rule of 1853. Tauzi No. 1490.
5. Sundarban Abadkari Taluk lot No. 56, 2nd portion, Tambuldaha, settled under rule of 1853. Tauzi No. 1415.
6. Sundarban Abadkari Taluk lot No. 61, 2nd portion, settled under rule of 1853. Tauzi No. 1491.
7. Sundarban Abadkari Taluk lot No. 61, 1st portion, settled under rule of 1853. Tauzi No. 1481.
8. Sundarban Abadkari Taluk Patil Sadanandapur lot No. 64, 1st portion, settled under rule of 1853. Tauzi No. 1483.
9. Sundarban Abadkari Taluk Bhabananda lot No. 64, 3rd portion, settled under rule of 1853. Tauzi No. 1486.

10. Sundarban Abadkari Taluk Netrabad lot No. 64, 4th portion, settled under rule of 1853. Tauzi No. 1487.

11. Sundarban Abadkari Taluk Dwarikanath Ghosh lot No. 64, 2nd portion, settled under rule of 1853. Tauzi No. 1485.

12. Sundarban Abadkari Taluk Sami Hadiaabad lot No. 64, 5th portion, settled under rule of 1853. Tauzi No. 1489.

13. Sundarban Abadkari Taluk lot No. 64, 7th portion, settled under rule of 1853. Tauzi No. 2658.

14. Sundarban Abadkari Taluk lot No. 100, settled under rule of 1853. Tauzi No. 1431.

The particulars to be recorded in the record-of-rights shall be the following:—

(*a*) the name of each tenant or occupant;

(*b*) the class or classes to which each tenant belongs, that is to say, whether he is a tenure-holder, raiyat holding at fixed rates, settled raiyat, occupancy raiyat, non-occupancy raiyat, or under-raiyat with or without a right of occupancy, and if he is a tenure-holder, whether he is a permanent tenure-holder or not, and whether his rent is liable to enhancement during the continuance of his tenure;

(*c*) the situation and quantity and one or more of the boundaries of the land held by each tenant or occupier;

(*d*) the name of each tenant's landlord;

(*e*) the name of each proprietor in the local area or estate with the character and extent of his interest, and the situation and quantity and one or more of boundaries of the lands, if any, which are his private lands as defined in Chapter XI of the Act;

(*f*) the rent and cess lawfully payable by each tenant at the time the record-of-rights is being prepared;

(*g*) the amount payable in respect of any rights of pasturage, forest rights, rights over fisheries and the like at the time the record-of-rights is being prepared, the conditions and incidents appertaining to such rights, and if the amount is a gradually increasing amount, the time at which and the increments by which it increases;

(*h*) the mode in which that rent has been fixed—whether by contract, by order of a Court, or otherwise;

(*i*) if the rent is a gradually increasing rent, the time at which, and the steps by which, it increases;

(*j*) the rights and obligations of each tenant and landlord in respect of—

(*i*) the use by tenants of water for agricultural purposes, whether obtained from a river, jhil, tank or well or any other source of supply, and

(*ii*) the repair and maintenance of appliances for securing a supply of water for the cultivation of the land held by each tenant, whether or not such appliances be situated within the boundaries of such land;

(*k*) the special conditions and incidents, if any, of the tenancy;

(*l*) any right-of-way or other easement attaching to the land for which a record-of-rights is being prepared;

(*m*) if the land is claimed to be held rent-free—whether or not rent is actually paid, and if not paid, whether or not the occupant is entitled to hold the land without payment of rent, and, if so entitled, under what authority:

Provided that if lands are not used for purposes connected with agriculture or horticulture, it shall be sufficient to record that fact together with the prescribed particulars relating to the occupant, the landlord and the tenancy.

24-Parganas.—No. 11020L.R.—1st September 1931.—In exercise of the powers conferred by section 101 (*2*) (*d*) of the Bengal Tenancy Act, 1885 (Act VIII of 1885), the Governor in Council is pleased to order that a survey shall be made and a record-of-rights prepared in respect of all lands which are comprised in the following Government estates of the 24-Parganas Collectorate and situated in the district of the 24-Parganas:—

1. Sundarban Abadkari Mahal Khulna Abad lot No. 109, 2nd portion, settled under rule of 1879. Tauzi No. 2831.

2. Sundarban Abadkari Mahal Sitalia Abad lot No. 109, 3rd portion, settled under rule of 1879. Tauzi No. 2832.

3. Sundarban Abadkari Mahal lot No. 111, 3rd portion, Ghugudanga, settled under rule of 1879. Tauzi No. 2828.

4. Sundarban Abadkari lot No. 111, 4th portion, Ghugudanga, settled under rule of 1879. Tauzi No. 2829.

5. Sundarban Abadkari lot No. 111, 5th portion, Ghugudanga, settled under rule of 1879. Tauzi No. 2830.

The particulars to be recorded in the record-of-rights shall be the following:—

(*a*) the name of each tenant or occupant;

(*b*) the class or classes to which each tenant belongs, that is to say, whether he is a tenure-holder, raiyat holding at fixed rates, settled raiyat, occupancy raiyat, non-occupancy raiyat, or under-raiyat with or without a right of occupancy, and if he is a tenure-holder, whether he is a permanent tenure-holder or not, and whether his rent is liable to enhancement during the continuance of his tenure;

(*c*) the situation and quantity and one or more of the boundaries of the land held by each tenant or occupier;

(*d*) the name of each tenant's landlord;

(*e*) the rent and cess lawfully payable by each tenant at the time the record-of-rights is being prepared;

(*f*) the amount payable in respect of any rights of pasturage, forest rights, rights over fisheries and the like at the time the record-of-rights is being prepared, the conditions and incidents appertaining to such rights, and if the amount is a gradually increasing amount, the time at which, and the increments by which, it increases;

(*g*) the mode in which that rent has been fixed—whether by contract, by order of a Court, or otherwise;

(*h*) if the rent is a gradually increasing rent, the time at which, and the steps by which, it increases;

(e) the rights and obligations of each tenant and landlord in respect of—

(i) the use by tenants of water for agricultural purposes, whether obtained from a river, jhil, tank or well or any other source of supply, and

(ii) the repair and maintenance of appliances for securing a supply of water for the cultivation of the land held by each tenant, whether or not such appliances be situated within the boundaries of such land;

(f) the special conditions and incidents, if any, of the tenancy;

(k) any right-of-way or other easement attaching to the land for which a record-of-rights is being prepared;

(l) if the land is claimed to be held rent-free—whether or not rent is actually paid, and if not paid, whether or not the occupant is entitled to hold the land without payment of rent, and, if so entitled, under what authority:

Provided that if lands are not used for purposes connected with agriculture or horticulture, it shall be sufficient to record that fact together with the prescribed particulars relating to the occupant, the landlord and the tenancy.

24-Parganas.—No. 11021L.R.—1st September 1931.—Under section 3 of the Bengal Survey Act 1875 (Act V of 1875), the Governor in Council is pleased to order that a survey shall be made of all lands which are comprised in the estates mentioned below of the 24-Parganas Collectorate and situated in the district of the 24-Parganas and that the boundaries of the estates, tenures, mauzas and fields be demarcated on the lands so to be surveyed:—

Government Estates.

1. Sundarban Abadkari Mahal Khulna Abad lot No. 109, 2nd portion, settled under rule of 1879. Tauzi No. 2831.
2. Sundarban Abadkari Mahal Sitalia Abad lot No. 109, 3rd portion, settled under rule of 1879. Tauzi No. 2832.
3. Sundarban Abadkari Mahal lot No. 111, 3rd portion, Ghugudanga, settled under rule of 1879. Tauzi No. 2828.
4. Sundarban Abadkari lot No. 111, 4th portion, Ghugudanga, settled under rule of 1879. Tauzi No. 2829.
5. Sundarban Abadkari lot No. 111, 5th portion, Ghugudanga, settled under rule of 1879. Tauzi No. 2830.

Temporarily-settled Private Estates.

1. Sundarban Abadkari Taluk lot No. 53, settled under rule of 1853. Tauzi No. 1487.
2. Sundarban Abadkari Taluk lot No. 55, Abad Sreedharpur, settled under rule of 1853. Tauzi No. 1484.
3. Sundarban Abadkari Taluk lot No. 55, Haidarabad, settled under rule of 1853. Tauzi No. 1482.
4. Sundarban Abadkari Taluk lot No. 55, settled under rule of 1853. Tauzi No. 1490.
5. Sundarban Abadkari Taluk lot No. 56, 2nd portion, Tambulduha, settled under rule of 1853. Tauzi No. 1415.
6. Sundarban Abadkari Taluk lot No. 61, 2nd portion, settled under rule of 1853. Tauzi No. 1491.
7. Sundarban Abadkari Taluk lot No. 61, 1st portion, settled under rule of 1853. Tauzi No. 1481.
8. Sundarban Abadkari Taluk Patil Sadanandapur lot No. 64, 1st portion, settled under rule of 1853. Tauzi No. 1483.
9. Sundarban Abadkari Taluk Bhabananda lot No. 64, 3rd portion, settled under rule of 1853. Tauzi No. 1486.
10. Sundarban Abadkari Taluk Netrabad lot No. 64, 4th portion, settled under rule of 1853. Tauzi No. 1487.
11. Sundarban Abadkari Taluk Dwarikanath Ghosh lot No. 64, 2nd portion, settled under rule of 1853. Tauzi No. 1485.
12. Sundarban Abadkari Taluk Sami Hadiaabad lot No. 64, 5th portion, settled under rule of 1853. Tauzi No. 1489.
13. Sundarban Abadkari Taluk lot No. 64, 7th portion, settled under rule of 1853. Tauzi No. 2658.
14. Sundarban Abadkari Taluk lot No. 100, settled under rule of 1853. Tauzi No. 1431.

24-Parganas.—No. 11204L.R.—5th September 1931.—In exercise of the powers conferred by sub-clause (b) of clause 7 of section 3 of the Land Registration Act, 1876 (Bengal Act VII of 1876), the Governor in Council is pleased to adopt the following villages in thanas Mathurapur, Joynagar and Canning lying within the administrative units of the 24-Parganas district as surveyed and recorded under the Bengal Tenancy Act, 1885 (Act VIII of 1885), in accordance with the notification No. 7794L.R., dated the 15th September 1924, as defining mauzas for the purpose of that clause in that district:—

Thana Mathurapur.

Jameson Island.
Burge Island.
G. Plot, 6th portion.
L. Plot (southern portion).

Thana Joynagar.

Lot No. 120.
Lot No. 121.
Lot No. 118.
Bhubaneswari.

Thana Canning.

Lot No. 124.
Lot No. 125.
Lot No. 126 (southern portion).

Burdwan-Hooghly-Howrah.—No. 11063L.R.—3rd September 1931.—Mr. A. Hughes, I.C.S., Assistant Settlement Officer, Burdwan-Hooghly-Howrah Settlement, is allowed leave on average pay for one month, under rule 81 (b) (i) of the Fundamental Rules, with effect from the 15th September 1931.

Land Acquisition.

NOTIFICATIONS.

Hooghly.—No. 11074L.A.—3rd September 1931.—Mr. L. A. Chapman, I.C.S., Subdivisional Officer, Serampore, in the district of Hooghly, is vested with the powers of a Collector under the Land Acquisition Act, I of 1894, in that subdivision.

Faridpur.—No. 11192L.A.—5th September 1931.—Whereas it appears to the Governor in Council that extra land is likely to be required to be taken by Government at the public expense for a public purpose, viz., for formation of embankment in miles 18, 21, 22, 23 and 24 of the Kalukhali-Bhatiapara Railway alignment in the villages of Char Laujana and Mathurapur (jurisdiction list Nos. 223 and 224, respectively, thana Baliakandi), Gopalpur, Lakshmandia, Mirer Kapashati, Khoksahat, Bauna and Ghorakhali (jurisdiction list Nos. 45, 36, 47, 49, 48 and 50, respectively, thana Bhushna), parganas Nasibsahi, Gangapath, Naldi and Satair, district Faridpur, it is hereby notified that for the above purpose, plots of land comprising portions of the cadastral plots Nos. 428, 431, 430, 429, 441, 443, 446, 447, 450, 451, 415, 507 and 508 of village Char Laujana, 2 of village Mathurapur, 444, 449, 450, 448, 447, 451 and 452 of village Gopalpur, 714, 715, 716, 717, 718, 748, 749, 755, 760, 766, 765, 768, 769, 386, 385, 384, 722, 723, 724, 725, 746, 747, 741, 749, 756, 759, 758 and 772 of village Lakshmandia, 486, 187, 177, 176, 175, 174 and 173 of village Mirer Kapashati, 518, 350, 354, 355, 357, 356, 347 and 446 of village Khoksahat, 24, 22, 30 and 32 of village Bauna, 690, 691, 693, 692, 788, 789, 791 and 793 of village Ghorakhali, and altogether measuring, more or less, 2·168 acres are likely to be required within the aforesaid villages.

This notification is made under the provisions of section 4 of Act I of 1894, to all whom it may concern.

Plans of the land may be inspected in the office of the Special Land Acquisition Officer, Faridpur, as well as in that of the Chief Engineer, Eastern Bengal Railway, at No. 3, Koilaghat Street, Calcutta.

In exercise of the powers conferred by the aforesaid section, the Governor in Council is pleased to authorise the officers for the time being engaged in the undertaking, with their servants and workmen, to enter upon and survey the land and do all other acts required or permitted by that section.

Any person interested in the above land, who has any objection to the acquisition thereof, may, within thirty days after the date on which public notice of the substance of this notification is given in the locality, file an objection in writing before the Collector of Faridpur.

Nadia.—No. 11201L.A. — 5th September 1931.—In exercise of the powers conferred by section 48 (*1*) of the Land Acquisition Act, I of 1894, the Governor in Council is pleased to withdraw from acquisition of two pieces of land altogether measuring, more or less, 6·924 acres, consisting of parts of cadastral survey plots Nos. 816, 2288, 805, 798, 797, 796, 795, 793, 792, 791, 790, 818 and 820 as shown in the plan as plot "A" and parts of cadastral survey plots Nos. 816, 815, 814 and 813 as shown in the plan as plot "B" which were notified for acquisition under declaration No. 12503L.A., dated the 27th October 1930, published at page 1726, Part I of the *Calcutta Gazette* of the 6th November 1930, for the trenching ground of the Kushtia Municipality in the district of Nadia.

Faridpur.—No. 11211 L.A.—7th September 1931.—Whereas it appears to the Governor in Council that extra land is likely to be required to be taken by Government at the public expense for a public purpose, viz., for repairs to formation in mile 17 due to floods in 1930, brickfield siding in mile 27, raising the formation in miles 44, 45 and 46, triangle line, drain, goods siding, etc., in mile 47, bridge No. 7B in mile 24 (branch), cleaning obstructions from the channel of Ghopghat khal at bridge No. 8B in mile 25 (branch) and Kamarkhali ghat station yard in mile 27 (branch) in connection with the construction of the Kalukhali-Bhatiapara Railway in the villages of Mirzapur, Char Naopara (jurisdiction list Nos. 218 and 219, respectively, thana Baliakandi, paragana Nasibsahi), Ghoshpur, Bagat, Ghopghat, Maslandapur (jurisdiction lists Nos. 124, 24, 19 and 2, respectively, thana Bhushna, paragna Satair), Bagjhapa, Khanerhat, Pona, Kasiani, Pingalia and Barasur (jurisdiction list Nos. 56, 59, 73, 60, 61 and 62, respectively, thana Muksudpur, parganas Naldi and Nasti), district Faridpur, it is hereby notified that for the above purpose plots of land comprising portions of the cadastral plots Nos. 181 of village Mirzapur, 17, 18, 20, 48, 46, 45, 43, 31, 32 and 41 of village Char Naopara, 1815, 1814, 1816 and 1817 of village Ghoshpur, 3679, 3715, 3706 and 3696 of village Bagat, 798, 665 and 680 of village Ghopghat, 2537, 2538 and 2528 of village Maslandapur, 757, 756, 758, 759, 753, 752, 749, 747, 746, 745, and 734 of village Bagjhapa, 1733, 1737, 1735, 1734, 1389, 1390, 1392, 1400, 1401, 1399, 1398, 1359 and 1357 of village Khanerhat, 48 of village Pona, 470, 542, 531, 532, 533, 535, 536, 537, 647, 831, 675, 676, 674, 667, 671 and 670 of village Kasiani, 568, 569, 574, 570, 571, 555, 542, 540, 539, 610, and 614 of village Pingalia, 89, 120, 119, 118, 117, 116, 127, 129, 115, 163, 162, 165, 161, 169, 170, 144, 143, 2094, 263, 262, 295, 296, 272, 2098, 326, 2099, 297, 300, 299, 326, 307, 376, 368, 339, 340, 342, 346, 410, 391, 2134, 379, 392 and 393 of village Barasur and altogether measuring, more or less, 7·245 acres, are likely to be required within the villages mentioned above in the district of Faridpur.

This notification is made, under the provisions of section 4 of Act I of 1894, to all whom it may concern.

Plans of the land may be inspected in the office of the Special Land Acquisition Officer, Faridpur, as well as in that of the Chief Engineer, Eastern Bengal Railway, at No. 3, Koilaghat Street, Calcutta.

In exercise of the powers conferred by the aforesaid section, the Governor in Council is pleased to authorise the officers for the time being engaged in the undertaking, with their servants and workmen, to enter upon and survey the land and do all other acts required or permitted by that section.

Any person interested in the above land, who has any objection to the acquisition thereof, may, within thirty days after the date on which public notice of the substance of this notification is given in the locality, file an objection in writing before the Collector of Faridpur.

ERRATUM.

Burdwan.— No. 11214 L.A.—7th September 1931.—In line 13 of the notification No. 5546 L.A., dated the 10th April 1931, under section 4 of the Land Acquisition Act, published at page 473, Part I of the *Calcutta Gazette* of the 23rd idem, in respect of the proposed acquisition of 24·43 acres of land required for the diversion of the Grand Trunk Road at Memari Bazar between 56th mile, 3rd quarter, and 57th mile, 3rd quarter, in the district of Burdwan,—

Read "two pieces" *for* "three pieces";

In line 17, *read* "towards north-west" *for* "towards west";

In lines 21-22, *read* "chainage 5,293 feet" *for* "chainage 5,175 feet";

In lines 22-23, *read* "chainage 5,382 feet" *for* "chainage 5,280 feet";

In lines 25-26, *read* "towards the north" *for* "towards the north-east";

In lines 26-27, *read* "chainage 6,435 feet" *for* "chainage 6,410 feet"; and in line 29, *read* "6,346 feet in length" *for* "6,305 feet in length."

DECLARATIONS.

Burdwan.—No. 11195L.A.—5th September 1931.—Whereas it appears to the Governor in Council that land is required to be taken by Government at the public expense for a public purpose, viz., for constructing the road approaches at chainage 5,434 feet of distributary No. 6A of the Main Canal, Damodar Canal Project, in the village of Royan, jurisdiction list No. 49, in thana Burdwan, pargana Burdwan, district Burdwan, it is hereby declared that for the above purpose two pieces of land altogether measuring, more or less, 0·19 acres, bounded on the—

Block A:

North—By the lands of Panchu Bala Debi and Banka Behari Karfa,

East—By the lands of Banka Behari Karfa and Provash Chandra Choudhury and others,

South—By the lands declared to be acquired for distributary No. 6A of the Main Canal, Damodar Canal Project,

West—By the lands of Panchu Bala Debi and Manager, Burdwan Raj Wards' Estate,

Block B:

North—By the lands declared to be acquired for distributary No. 6A of the Main Canal, Damodar Canal Project,

East—By the lands of Dharmadas Mandal and others,

South—By the lands of Dharmadas Mandal and others and Manager, Burdwan Raj Wards' Estate,

West—By the lands of Manager, Burdwan Raj Wards' Estate,

are required within the aforesaid village of Royan.

This declaration is made, under the provisions of section 6, Act I of 1894, to all whom it may concern.

A plan of the land may be inspected in the office of the Special Land Acquisition Deputy Collector, Burdwan, as well as in that of the Executive Engineer, Damodar Canal Division, Burdwan.

Calcutta.—No. 11198L.A.—5th September 1931.—Whereas it appears to the Governor in Council that land is required to be taken by Government at the expense of the Calcutta Christian Schools Society for a public purpose, viz., for the extension of Calcutta Girls' High School in Ward No. X of the Calcutta Municipality in the city of Calcutta, it is hereby declared that for the above purpose a piece of land being a portion of premises No. 118, Prinsep Street and measuring, more or less, 0·1,818 of an acre, bounded on the—

North—By Prinsep Street,

East—By premises No. 120, Prinsep Street, and premises No. 151, Dhurrumtolah Street,

South—By premises No. 151, Dhurrumtolah Street,

West—By the remaining portion of premises No. 118, Prinsep Street,

is required within the aforesaid Ward No. X of the Calcutta Municipality in the city of Calcutta.

This declaration is made, under the provisions of section 6, Act I of 1894, to all whom it may concern.

A plan of the land may be inspected in the office of the First Land Acquisition Collector, at No. 5, Bankshall Street, Calcutta.

Burdwan.—No. 11217 L.A.—7th September 1931.—Whereas it appears to the Governor in Council that land is required to be taken by Government at the public expense for a public purpose, viz., for the diversion of Grand Trunk Road at Memari Bazar between 56th mile, 3rd quarter, and 57th mile, 3rd quarter, in the villages of Mahabatpur or Memari, Sultanpur and Radhakantapur, jurisdiction list Nos. 220, 180 and 181, respectively, in thana Memari, pargana Nalhi, district Burdwan, it is hereby declared that for the above purpose two pieces of land measuring, more or less, 24·16 acres, commencing from chainage 0 near to 55½ mile stone and south-western side of the existing Grand Trunk

Road and running generally towards north-west through mauzas Memari and Sultanpur up to chainage 4,200 feet and then towards north up to south side of the main line of the East Indian Railway boundary at chainage 5,293 feet; and then again commencing from chainage 5,382 feet on the northern side of the main line of the East Indian Railway boundary and proceeding generally towards the north and terminating at chainage 6,435 feet in mauza Radhakantapur and varying in width from 1 to 230 feet and being 6,346 feet in length, are required within the aforesaid villages of Mahabatpur or Memari, Sultanpur and Radhakantapur.

This declaration is made, under the provisions of section 6 of Act I of 1894, to all whom it may concern.

A plan of the land may be inspected in the office of the Special Land Acquisition Deputy Collector, Burdwan, as well as in that of the Executive Engineer, Burdwan Division.

H. C. V. PHILPOT,
Secy. to the Govt. of Bengal.

Orders by the Conservator of Forests, Northern Circle, Bengal.

Buxa.—No. 5880For.—1st September 1931.—Mr. A. C. Gupta, Deputy Conservator of Forests, attached to the Buxa Division, is posted to the charge of the Kumargram Duar subdivision of that Division, with headquarters at Kumargram Duar, with effect from the 21st September 1931.

Buxa-Kurseong.—No. 5881For.—1st September 1931.—On relief of the charge of the Kumargram Duar subdivision, Babu Surendra Kumar Datta, Extra Assistant Conservator of Forests, is posted to the charge of the Kurseong Range in the Kurseong Division, with headquarters at Dow Hill.

E. O. SHEBBEARE,
Conservator of Forests,
Northern Circle, Bengal.

SHERIFF'S OFFICE, THE 27TH AUGUST 1931.

Notice is hereby given that the Fifth Criminal Sessions of the year 1931 of the High Court of Judicature at Fort William in Bengal for the town of Calcutta and Factory of Fort William and the places subordinate thereto, will be held at the Court House, in the town of Calcutta, on Monday, the 7th day of December next, at 11 o'clock in the forenoon, and thenceforward from day to day until the said sessions be over. And it is hereby proclaimed that all persons who are to prosecute any of the prisoners to be brought up for trial at the said sessions be present then and there to prosecute.

P. N. TAGORE, *Sheriff.*

শরিফ আফিস, সন ১৯৩১ সাল, তারিখ ২৭শে আগষ্ট।

সকলকে সমাচার দেওয়া যাইতেছে যে সুবে বাঙ্গালার ফোর্ট উইলিয়ম দুর্গের অধীন সহর কলিকাতার ও অন্যান্য স্থানের ফৌজদারী বিচার নিষ্পত্তি জন্য আগামী সন ১৯৩১ সালের ৭ই ডিসেম্বর, সোমবার বেলা ১১ ঘটিকার সময় এবং যে পর্য্যন্ত সেশিয়ানের কার্য্য শেষ না হয় প্রতিদিন উক্ত সময়ে কলিকাতার হাইকোর্টের আপন আদালত ঘরে সন ১৯৩১ সালের পঞ্চম ক্রিমিনেল সেশিয়ান বসিবেক এবং এতদ্দ্বারা প্রচার করা যাইতেছে যে, যে সকল ব্যক্তি কোন কয়েদির বিরুদ্ধে ফৌজদারী মিছিল করিবেক তাহারা উক্ত স্থানে উক্ত সময়ে হাজির থাকিয়া মোকদ্দমা করে, ইতি।

পি, এন, ঠাকুর,
শরিফ।

HIGH COURT NOTICES.

Original Side.

Calcutta, the 31st August 1931.

It is ordered that Rule 109A of Chapter XXXVI of the Rules and Orders of the Calcutta High Court, Original Side, 1914 (3rd edition, 1930), be amended by adding the words "and despatching" after the word "preparing" and the following after item (*j*) with effect from the 4th August 1931:—

And to the Court Keeper

		Rs.	A.	P.
(k) For supervising the despatch of the paper books ...		5	0	0

And to the Duftry

(l) For packing the paper books for despatch ...		2	0	0

N.B.—The cost of packing materials and postage stamps used for despatching the paper books shall be certified by the Court Keeper and credited to Government from the deposit mentioned in Rule 5 of Chapter XXXIII.

It is ordered that Rule 25 of Chapter I of the Rules and Orders of the Calcutta High Court, Original Side, 1914 (3rd edition, 1930), be amended by substituting for the words and figures "10th of November 1931" the words and figures "1st of July 1932" with effect from the 4th August 1931.

By order of the Full Court,

N. GHATAK, *Registrar (offg.).*

ORDERS BY COMMISSIONERS OF DIVISIONS.

Burdwan Division—Chinsura.

No. 2678J.G.—29th August 1931.—Babu Parbati Charan Nandi, Sub-Deputy Collector and Sub-Deputy Magistrate, on probation, Bankura, is appointed Circle Officer, Gangajalghati, in the Sadar subdivision of the same district, *vice* Babu Nagendra Nath Das, granted leave.

This cancels the orders of the 23rd August 1931, appointing Maulvi Abu Ahmed Faizal Mohi, Sub-Deputy Collector, Bankura, as Circle Officer, Gangajalghati.

No. 1836 L. S.-G.—1st September 1931.—It is hereby notified for general information that the by-elections in police-stations Ghatal, Chandrakona and Daspur in the Ghatal subdivision of the district of Midnapore having failed, I hereby appoint (in exercise of the powers conferred on me under the proviso to section 19 (*1*) of the Bengal Local Self-Government Act (Act III B. C. of 1885) and acting under the orders of the Local Government given in the exercise of the administrative control vested in them by section 29 B of the Act) the gentlemen named in column 2 of the subjoined statement to be members of the Ghatal local board in the district of Midnapore in place of those shewn in column 3 thereof :—

1	2	3
Names of police-stations.	Names of gentlemen appointed.	Names of gentlemen removed or resigned.
Ghatal ..	Dr. Hari Pada Santra.	Babu Hari Satya Roy, resigned.
	Babu Gobinda Chandra Kar.	Babu Kedar Nath Roy, resigned.
Chandrakona	Babu Ram Krishna Karak, B.L.	Babu Surya Kumar Mukherjee, resigned.
	Babu Sashi Bhusan Ghose.	Babu Monotoshan Roy, resigned.
	Babu Bepin Behari Mondal, B.L.	Babu Ram Monohar Sing, removed under section 18A of the Act.
	Babu Dibakar Hazra.	Babu Lakshan Chandra Sarker, removed under section 18A of the Act.
Daspur ..	Babu Gobinda Chandra Aloo.	Babu Saroj Mohan Guin, resigned.
	Babu Sourindra Mohan Goswami, M.A., B.L.	Babu Atul Chandra Pain, resigned.
	Babu Brajendra Nath Panja.	Babu Girindra Nath Maity, removed under section 18 (*1*) (*c*) of the Act.
	Dr. Sailaja Kanta Ghose.	Babu Mohini Mohan Das, removed under section 18A of the Act.

No. 1839L.S.-G.—2nd September 1931.—It is hereby notified for general information that under section 19(*1*) of the Bengal Local Self-Government Act (Bengal Act III of 1885) the gentlemen named in column 2 of the subjoined table have been duly elected to be members of the Tamluk local board in the district of Midnapore in place of those shewn in column 3 thereof :—

1	2	3
Names of police-stations.	Names of gentlemen elected.	Names of gentlemen removed or resigned.
Mahisadal ..	Babu Radha Nath Panda.	Babu Bankim Chandra Bhowmick, removed under section 18A of the Act.
	Babu Nirmal Kanti Mitra.	Babu Annada Charan Maity, resigned.
Panskura ..	Babu Ramani Ranjan Chakraverty.	Babu Sarat Chandra Chakraverty, resigned.
	Babu Upendra Kisor Samanta Roy.	Babu Harekrishna Pattanaik, resigned.

No. 1842L.S.-G.—2nd September 1931.—It is hereby notified for general information that the by-elections in police-stations Tamluk and Sutahata in the Tamluk subdivision of the district of Midnapore having failed, I hereby appoint (in exercise of the powers conferred on me under the proviso to section 19 (*1*) of the Bengal Local Self-Government Act (Act III B.C. of 1885) and acting under the orders of the Local Government given in the exercise of the administrative control vested in them by section 29B of the Act) the gentlemen named in column 2 of the subjoined table to be members of the Tamluk local board in the district of Midnapore in place of those noted in column 3 thereof :—

1	2	3
Names of police-stations.	Names of gentlemen appointed.	Names of gentlemen removed or resigned.
Tamluk ..	Babu Baidya Nath Sarkar.	Babu Bipra Charan Maity, removed under section 18A of the Act.
	Khan Sahib Shaik Aminuddin.	Babu Pulin Behari Sahoo, resigned
Sutahata ..	Rai Sahib Sasadhar Das.	Babu Sarat Chandra Das, resigned.
	J. George, Esq., I.C.S.	Babu Brojendra Krishna Goswami, resigned.

No. 1845L.S.-G.—2nd September 1931.—It is hereby notified for general information that the by-elections in police-stations Egra, Pataspur and Khedgree in the Contai subdivision of the district of Midnapore having failed, I hereby appoint (in exercise of the powers conferred on me under the proviso to section 19 (*i*) of the Bengal Local Self-Government Act (Act III B.C. of 1885), and acting under the orders of the Local Government given in the exercise of the administrative control vested in them by section 29B of the Act) the gentlemen named in column 2 of the subjoined statement to be members of the Contai local board in the district of Midnapore in place of those shewn in column 3 thereof :—

1	2	3
Names of police-stations.	Names of gentlemen appointed.	Names of gentlemen removed or resigned.
Egra ..	Mirza Hatam Beg ..	Babu Ramani Mohan Maity, removed under section 18A of the Act.
	Babu Srinath Chandra Jana.	Babu Girish Chandra Mahapatra, resigned.
Pataspur ..	Maulvi Farlul Karim	Babu Sashi Bhusan Pal, resigned.
	Chaudhury Jitendra Nandan Das Mahapatra.	Babu Rohini Nandan Das Mahapatra, resigned.
Khedgree	Babu Sribari Charan Das.	Babu Monindra Nath Mondol, resigned.

No. 1851L.S.-G.—2nd September 1931.—It is hereby notified for general information that, under section 19 (*1*) of the Bengal Local Self-Government Act (Bengal Act III of 1885), Babus Ashutosh Mondal and Kailash Chandra Bhunia have been duly elected to be members of the Sadar local board in the district of Midnapore, *vice* Babus Pashupati Samanta and Nagendra Nath Maity, resigned.

No. 1854L.S.-G.—2nd September 1931.—It is hereby notified for general information that, under section 19 (*1*) of the Bengal Local Self-Government Act (Bengal Act III of 1885), Shaik Alauddin Ahmed has been duly elected to be a member of the Sadar local board in the district of Midnapore, *vice* Babu Aditya Kumar Bankura, removed.

No. 1848L. S.-G.—2nd September 1931.—It is hereby notified for general information that, under section 19 (*1*) of the Bengal Local Self-Government Act (Bengal Act III of 1885), the gentlemen named in column 2 of the subjoined table have been duly elected to be members of the Contai local board in the district of Midnapore in place of those shewn in column 3 thereof :—

1	2	3
Names of police-stations.	Names of gentlemen elected.	Names of gentlemen removed or resigned.
Contai ..	Babu Bidhu Bhusan Bhunia.	Babu Iswar Chandra Mal, removed under section 18A of the Act.
	Babu Lakshami Kanta Hasra.	Babu Pramatha Nath Banerji, removed under section 18A of the Act.
Ramnagar	Babu Pratap Chandra Sasmal.	Babu Trailakhya Nath Prodhan, removed under section 18A of the Act.
	Babu Brahmananda Panda.	Babu Dasarathi Panda, resigned.
Egra ..	Babu Mati Lal Naik	Babu Bepin Behari Adhikari, removed under section 18A of the Act.
Patasnur ..	Babu Gajendra Nath Sahoo.	Babu Charu Chandra Mahanti, resigned.
Khadgree ..	Babu Trailakya Nath Maity.	Babu Nikunja Behari Maity, removed under section 18A of the Act.
	Babu Gopinath Maity.	Babu Jibon Krishna Maity, resigned.

No. 1857 L.S.-G.—2nd September 1931.—It is hereby notified for general information that the by-elections in police-stations Midnapore, Garbeta, Pingla and Keshpur in the Sadar subdivision of the district of Midnapore having failed, I hereby appoint (in exercise of the powers conferred on me under proviso to section 19(*1*) of the Bengal Local Self-Government Act (Act III B. C. of 1885) and acting under the orders of the Local Government given in the exercise of the administrative control vested in them by section 29B of the Act) the gentlemen named in column 2 of the subjoined statement to be members of the Sadar local board in the district of Midnapore in place of those shewn in column 3 thereof :—

1	2	3
Names of police-stations.	Names of gentlemen appointed.	Names of gentlemen removed or resigned.
Midnapore	Babu Manindra Kumar Ghose.	Babu Kishoripati Roy, resigned.
	Maulvi Kabiruddin Ahmed.	Babu Atul Chandra Bose, resigned.
Garbeta ..	Babu Nani Gopal Sanyal.	Ram Sundar Singh, removed under section 18A of the Act.
	Babu Ranakishori Ram Chandra Deo.	Babu Basanta Kumar Sarkar, removed under section 18A of the Act.
Pingla ..	Babu Dhirendra Nath Hazra.	Babu Sarat Chandra Samanta, resigned.
Keshpur ..	Babu Ananta Kumar Bag.	Babu Kalipada Ray, resigned.

No. 2702J.G.—3rd September 1931.—Babu Sisir Kumar Har, Sub-Deputy Collector and Sub-Deputy Magistrate, posted to this division under Government notification No. 7925A., dated the 2nd September 1931, is posted temporarily to the headquarters station of the Hooghly district on general duty.

No. 2707J.G.—3rd September 1931.—In accordance with the provisions of rule 63 (*2*) of Chapter IV of the Bengal Jail Code, I hereby appoint Babu Sarat Chandra Bose, B.L., Pleader, and re-appoint Maulvi Nawajesh Ali to be non-official visitors of the Uluberia Subsidiary Jail in the district of Howrah for a period of two years from the date of this notice.

L. B. BURROWS, *Commissioner (offg.)*.

Chittagong Division—Chittagong.

No. 3337G.—2nd September 1931.—Maulvi Syeduddin Ahmad, Sub-Deputy Collector and Circle Officer, Hajiganj, in the district of Tippera, is allowed leave on average pay from the 8th to the 14th October 1931 (both days inclusive), under rule 81 (*b*) (*ii*) of the Fundamental Rules.

W. H. NELSON, *Commissioner*.

Noakhali, the 31st August 1931.

No. 8431J.—It is hereby notified for general information that, under section 13 of the Bengal Village Self-Government Act (Act V of 1919) read with rule 36 of the rules for the election and appointment of members of union boards, Babu Gour Sundar Nath has been duly appointed to be a member of the Char Fakira union board No. V, police-station Companyganj in the Sadar subdivision of the district of Noakhali, *vice* Babu Mathura Mohan Sil, deceased.

No. 8442J.—It is hereby notified for the information of all concerned that 14th October 1931 from 11 a.m. to 3 p.m. has been fixed as the date and hour for holding the by-election of a member of Feni local board for Feni thana of the district of Noakhali, in place of Khan Saheb Bazlul Haq, deceased.

B. R. SEN, *District Magistrate*.

Tippera, the 1st September 1931.

No. 4954M.—It is hereby notified for general information that, under section 13 of the Bengal Village Self-Government Act, 1919, read with section 6, clause (*3*) and rule 36 of the rules for the election and appointment of members of union boards, Munshi Nadirjjaman Mea has been appointed as a member of the Dharkar union board in thana Kasba in the Brahmanbaria subdivision of the district of Tippera, *vice* Munshi Enayetulla Mea, deceased.

No. 4956M.—It is hereby notified for general information that—

(*a*) Under sub-section (*2*) of section 6 of the Bengal Village Self-Government Act, 1919 (Act V of 1919), the gentlemen named below have been duly elected to be members of the Kuti union board in thana Kasba in the Brahmanbaria subdivision of the Tippera district :—

Babu Charu Bhusan Das Gupta.
Babu Monoranjan Bhattacharyya.
Babu Sachindra Mohan Lodh *alias* Chintaharan Lodh.
Babu Brindaban Chandra Deb Barma.

(*b*) Under section (*3*) of section 6 of the Bengal Village Self-Government Act, 1919 (Act V of 1919), the following gentlemen have been appointed as members of the Kuti union board in thana Kasba in the Brahmanbaria subdivision of the Tippera district :—

Munshi Suruj Mea.
Babu Dharani Ranjan Das.
Babu Surendra Nath Chakrabortty.

(*a*) Under sub-section (*4*) of section 6 of the Bengal Village Self-Government Act, 1919 (Act V of 1919), the following gentlemen have been appointed as members of the Kuti union board in thana Kasba in the Brahmanbaria subdivision of the Tippera district:—

Babu Mohini Mohan Singha Roy Barma.
Munshi Abdus Sobhan.

Tippera, the 5th September 1931.

No. 5024M.—It is hereby notified for general information that, under section 13 of the Bengal Village Self-Government Act (Act V of 1919) read with rule 36 of the rules for the election and appointment of members of union boards, Munshi Abdul Majid Majumdar has been appointed as a member of the Ibrahimpur union board in thana Chandpur in the Chandpur subdivision of the Tippera district, *vice* Munshi Abdul Aziz Majumdar, resigned.

C. G. B. STEVENS, *District Magistrate.*

Dacca Division—Dacca.

No. 4446J.—1st September 1931.—It is hereby notified for general information that in the general elections held on the 13th, 14th and 15th July 1931, the following gentlemen were duly elected to be members of the undermentioned local boards in the district of Bakarganj for the police-stations mentioned above their names:—

Sadar local board.

Kotwali police-station.
Maulvi Mahammed Hossain Mia.
Maulvi Mia Ahmed Ali.

Nalchiti police-station.
Maulvi Sadaraddin Ahmed.
Munshi Ataharali Talukdar.

Jhalakati police-station.
Maulvi Hazi Syeduddin Ahmed.
Babu Khagendra Nath Ghosh.

Bakarganj police-station.
Babu Rajeswar Roy Choudhury.
Choudhury Mahammed Ismail Khan.
Babu Bireswar Sur Roy Choudhury.

Rajapur police-station.
Maulvi Syed Ansaruddin Ahmed.

Hizla police-station.
Babu Tej Chandra Banerjee.
Maulvi Abdul Khaleque Talukdar.

Mehendiganj police-station.
Maulvi Khalilur Rahaman Choudhury.
Babu Akhil Chandra Dutta Choudhury.

Muladi police-station.
Maulvi Safiuddin Ahmed.

Gournadi police-station.
Babu Mohan Lal Shaha.
Maulvi Golam Esahaq Meah.
Babu Kali Prasanna Guha.

Babuganj police-station.
Maulvi Abdul Waheb Khan.

Perojpur local board.

Pirojpur police-station.
Babu Surja Prasanna Bajpai Choudhury.
Hazi Gyasuddin Talukdar.

Nazirpur police-station.
Babu Basanta Kumar Samadder.
Maulvi Rahemuddin Mallik.

Kowkhali police-station.
Munshi Hatemali Sardar.

Swarupkati police-station.
Hazi Mahammed Jinnat Ali.
Babu Rohini Kumar Sikdar.

Banaripara police-station.
Maulvi Syed Mahammed Afzal.

Bhandaria police-station.
Maulvi Wahabuddin Talukdar.

Kathalia police-station.
Maulvi Dadan Ali Jomaddar.

Bamna police-station.
Khondakar Abdul Latiff.

Mathbaria police-station.
Maulvi Afserali Jomadder.
Babu Sakha Nath Roy.

Patharghata police-station.
Maulvi Hatemali Jomadder.

Patuakhali local board.

Patuakhali police-station.
Maulvi Fazlal Karim.
Babu Dinesh Chandra Banerjee.

Baufal police-station.
Munshi Mahammed Nural Haque.
Maulvi Mahammed Idris Molla.
Maulvi Abdul Latif Mia *alias* Kanchan Mia.

Galachipa police-station.
Munshi Mahammed Kazem Ali Sikdar.
Maulvi Abdur Rashid Talukdar.

Mirzaganj police-station.
Maulvi Azaharuddin Khan.

Barguna police-station.
Munshi Mahammed Belayet Ali.

Amtali police-station.
Khan Sahib Maulvi Emdad Ali.
Munshi Azharuddin Ahmed Talukdar.

Betagi police-station.
Maulvi Abi Abdullah Khan.

Bhola local board.

Bhola police-station.
Hazi Abdul Karim Talukdar.

Barhanaddi police-station.
Maulvi Syed Azizar Rahaman *alias* Nawa Mia.

Tazumaddi police-station.
Maulvi Ali Ahammad Pandit.

Daulatkhan police-station.

Maulvi Rahim Box Salem.
Maulvi Shamsul Haque.

Lalmohan police-station.

Maulvi Abdus Somed.

2. In exercise of the powers conferred on me by section 10 of the Bengal Local Self-Government Act, III of 1885, and acting under the orders of the Local Government given in the exercise of the administrative control vested in them by section 29B of the said Act, I hereby appoint the following gentlemen to be members of the local boards for the police-stations mentioned above their names:—

Sadar local board.

Wazirpur police-station.

Babu Dwijendra Nath Dutta.

Bhola local board.

Barhanaddi police-station.

Maulvi Abdul Fatah Mosleuddin Choudhury.

Bhola police-station.

Maulvi Mozammal Huq, B.A.

3. In exercise of the powers conferred on me by section 11 of the Local Self-Government Act (Bengal Act III of 1885), and acting under the orders of the Local Government given in the exercise of the administrative control vested in them by section 29B of the said Act, I hereby appoint the following gentlemen to be members of the local boards in the district of Bakarganj as noted below:—

Sadar local board.

Maulvi Abdul Wahed Khondakar.
Maulvi Badiur Rahaman.
Maulvi Mohsenuddin Ahmad.
Mr. S. M. Hossain.
Maulvi Fazlul Karim.
Maulvi Mafizuddin Ahmed.
Rai Sahib Ganga Charan Das Gupta.
Babu Swarna Kumar Guha.
Babu Parbati Charan Haldar.
The Circle Officer, Mehendiganj (*ex-officio*).

Pirojpur local board.

Khan Sahib Mahafezuddin Ahmed.
Maulvi Mafezuddin Sardar Talukdar.
Maulvi Abdul Karim Talukdar.
Babu Surendra Narayan Ghosh.
Babu Lalit Kumar Bal, M.L.C.
Rai Satyendra Nath Roy Choudhury Bahadur.
The Circle Officer, Banaripara (*ex-officio*).

Patuakhali local board.

Maulvi Munsur Ahmed *alias* Munsurali Meah.
Khan Sahib Maulvi Md. Akram.
Babu Akshoy Kumar Sarkar.
Babu Hemanta Kumar Rudra.
Rai Sahib Jamini Kanta Roy.
The Circle Officer, East Patuakhali (*ex-officio*).

Bhola local board.

Khan Sahib Maulvi Efazuddin Ahmed.
Khan Sahib Maulvi Nuruzzaman.
Babu Mahendra Nath Roy Choudhury.
The Circle Officer, Bhola (*ex-officio*).

No. 4498J.—5th September 19[illegible].—Maulvi Anwar-Ul-Huq, Sub-Deputy Collector and Circle Officer, Sadar Circle, in the district of Faridpur, is allowed leave on average pay for two weeks, under rule 81 (*b*) (*ii*) of the Fundamental Rules, with effect from the 7th September 1931, or from any subsequent date on which he may avail himself of it.

L. G. DURNO, *Commissioner* (*offg.*).

Mymensingh, the 1st September 1931.

No. 700C.—It is hereby notified for general information that—

(*a*) Under sub-section (*2*) of section 6 of the Bengal Village Self-Government Act, 1919 (Bengal Act V of 1919), the following gentlemen have been duly elected to be members of the undermentioned union boards in police-station Pakundia in the Kishoreganj subdivision of the Mymensingh district:—

Narandi union board.

Munshi Nurannabi.
Munshi Mahammad Feroz Shah.
Munshi Afsaruddin Doctor.
Munshi Abdul Majid.
Munshi Abdul Karim Master.
Munshi Golam Sandani.

Patuabhanga union board.

Babu Sudhendu Chandra Majumder, B.L.
Maulvi Helaluddin.
Munshi Abdul Hai.
Munshi Jubed Ali.
Munshi Ahammad Hossein.
Munshi Abdul Salam.

Chandipasha union board.

Munshi Abdur Rahaman Sarkar.
Munshi Abdul Nabi Bhuiya
Munshi Habijuddin Bhuiya.
Munshi Abdul Hakim.
Munshi Abdul Kader Sarkar.
Maulvi Abdul Hakim.

(*b*) Under sub-section (*3*) of section 6 of the Bengal Village Self-Government Act, the following gentlemen have been appointed by the District Magistrate of Mymensingh to be members of the undermentioned union boards:—

Narandi union board.

Maulvi Sohrabuddin Ahmed, B.A.
Munshi Golam Asfia.
Babu Dwaraka Nath Datta Ray.

Patuabhanga union board.

Maulvi Mahiuddin Ahmed.
Babu Giris Chandra De Ray.
Babu Kamal Kanta Nath

Chandipasha union board.

Munshi Ajimuddin Haji.
Babu Mathura Nath Motayet.
Maulvi Abdul Alim Mahammad.

Mymensingh, the 2nd September 1931.

No. [illegible] — It is hereby notified for general information that, under section 13 of the Bengal Village Self-Government Act, 1919 (Bengal Act V of 1919), read with rule 35 of the rules for the election and appointment of members of union boards, etc., Maulvi Sabahali has been duly elected to be a member of the Barhatta union board in police-station Barhatta in the Netrokona subdivision of the Mymensingh district, *vice* Maulvi Abdur Rahim deceased.

H. GRAHAM, *District Magistrate.*

Presidency Division—Calcutta.

No. 1501R.G.—29th August 1931.—Rai Sahib Surendra Nath Banarji, Sub-Deputy Collector and Circle Officer, Baruipur, 24-Parganas, is transferred to the Calcutta Collectorate.

No. 1507R.G.—29th August 1931.—Babu Jatindra Mohan Das, Sub-Deputy Collector, Sadar, 24-Parganas, is posted to Baruipur in that subdivision as Circle Officer.

No. 1538R.G.—31st August 1931.—Babu Sudhir Kumar Sen Gupta, Sub-Deputy Collector, Sadar, 24-Parganas, is granted leave on average pay for twelve days, under rule 81 (*b*) (*ii*) of the Fundamental Rules, with effect from the 27th October 1931.

No. 1532R.G.—2nd September 1931.—Babu Ratan Lal Das Gupta, Sub-Deputy Collector, Sadar, 24-Parganas, is posted temporarily to the Diamond Harbour subdivision of that district for the period that Mr. Nrisinha Ranjan Mukharji is away at Hooghly.

No. 1656M.—3rd September 1931.—It is hereby notified for general information that the following gentlemen have been duly elected to be Commissioners of the Barasat Municipality in the district of the 24-Parganas at the last general elections held in the several wards on the dates noted above each:—

15th August 1931.

Ward I.

Babu Gurupada Banarji.
Babu Bipul Chandra Mukharji.
Babu Hem Chandra Ghose.

14th March 1931.

Ward II.

Babu Basanta Kumar Sen.
Babu Monmathanath Mukherji.

Ward III.

Maulvi Saadatullah.
Maulvi Shaikh Fazla Karim.

Ward IV.

Babu Amarnath Chatarji.
Babu Shishir Kumar Basu.

Ward V.

Babu Jivandhone Chatarji.
Babu Nalin Krishna Chatarji.
Babu Santiprasanna Banerji.

There were re-elections in Ward No. 1 owing to objections.

F. W. ROBERTSON, *Commissioner (offg.).*

Khulna, the 2nd September 1931.

It is hereby notified for general information that, under section 13 of the Bengal Village Self-Government Act, 1919 (Bengal Act V of 1919), read with rule 36 of the rules for the election and appointment of members, etc., under the said Act, Babu Rash Behari Kundu has been appointed by the District Magistrate of Khulna to be a member of Kachua union board in Kachua police-station in the Bagerhat subdivision of the district of Khulna, *vice* Babu Jitendra Nath Datta Chaudhury, removed under section 12 (*1*) (*d*) of the Bengal Village Self-Government Act.

E. W. HOLLAND, *District Magistrate.*

Rajshahi Division—Jalpaiguri.

No. 3366J.—29th August 1931.—Under the provisions of rule 63 (*1*) of Chapter IV of the Bengal Jail Code, I appoint Maulvi Muhammad Basiruddin, M.L.C., to be a non-official visitor of the Nator Sub-Jail for the period of his membership of the Bengal Legislative Council.

No. 3382J.—1st September 1931.—Maulvi Muhammad Ismail, Sub-Deputy Collector, Serajganj, is transferred to the Thakurgaon subdivision of the Dinajpur district for employment as Circle Officer, Birganj.

This cancels the orders contained in this office notification No. 3235J., dated the 20th August 1931, transferring Maulvi Muhammad Mohsin, Sub-Deputy Collector, Dinajpur, to the Thakurgaon subdivision of that district for employment as Circle Officer, Birganj.

J. G. DRUMMOND, *Commissioner (offg.).*

Rangpur, the 1st September 1931.

No. 4310J.—It is hereby notified for general information that, under section 13 of the Bengal Village Self-Government Act (Act V of 1919), Babu Haribola Mojumdar has been appointed to be a member of Latibpur union board in police-station Mithapukur of Sadar subdivision of the Rangpur district, *vice* Babu Lalit Chandra Majumdar, resigned.

No. 4313J.—It is hereby notified for general information that, under section 13 of the Bengal Village Self-Government Act (Act V of 1919), Babu Bhuban Mohon Sarkar has been appointed to be a member of Bhendabari union board in police-station Pirganj of Sadar subdivision of the Rangpur district, *vice* Babu Chandra Mohan Mandal, deceased.

T. M. Dow, *District Magistrate.*

Jalpaiguri, the 31st August 1931.

It is hereby notified for general information that, under section 13 of the Bengal Village Self-Government Act, 1919 (Act V of 1919), Munshi Ghoga Mohammed has been duly elected to be a member of the Fulbari union board in police-station Rajganj in the Sadar subdivision of the district of Jalpaiguri, in place of Munshi Hazi Basiruddin, deceased.

C. MUKERJEE,
Deputy Commissioner (offg.).

The Calcutta Gazette

THURSDAY, SEPTEMBER 10, 1931.

Part I A

Orders and Notifications by the Government of India republished for general information.

FOREIGN AND POLITICAL DEPARTMENT.

NOTIFICATION.

Simla, the 26th August 1931.

No. 513-G.—With reference to Notification No. 696-G., dated the 10th December 1930, the provisional recognition of the appointment of Mr. A. Kodaki as Vice-Consul for Japan at Calcutta has been confirmed by His Majesty's Government.

E. B. HOWELL,

Foreign Secy. to the Govt. of India.

DEPARTMENT OF INDUSTRIES AND LABOUR.

Public Works Branch.

NOTIFICATION.

Simla, the 19th August 1931.

No. E-22.—Mr. Sunny Gupta has been appointed by the Secretary of State for India in Council to the Indian Service of Engineers in Bengal (Irrigation Branch) as an Assistant Executive Engineer, on probation, with effect from the 14th April 1931.

T. RYAN,

Joint Secy. to the Govt. of India.

DEPARTMENT OF COMMERCE.

NOTIFICATIONS.

(ECCLESIASTICAL.)

Simla, the 29th August 1931.

No. 51 (8).—The Reverend D. S. McKenzie, M.A., Metropolitan's Chaplain, is granted combined leave for six months and twenty-three days, namely, leave on average pay for four months and twenty-three days, and leave on half average pay for two months, with effect from the 5th September 1931, or any subsequent date on which he may avail himself of it.

The Reverend E. R. Wilkinson, M.A., Senior Chaplain, St. Paul's Cathedral, Calcutta, is appointed to act as Metropolitan's Chaplain in addition to his own duties, with effect from the 5th September 1931, or any subsequent date on which he may take over charge of his new duties.

ESTABLISHMENTS.

No. 43-E. (5)/31.—The Hon'ble Mr. J. A. Woodhead, C.I.E., I.C.S., Secretary to the Government of India, Department of Commerce, is granted leave on average pay for 3½ months with effect from the forenoon of the 7th August 1931.

* * * *

A. RAISMAN,

Joint Secy. to the Govt. of India (offg.).

HOME DEPARTMENT.

NOTIFICATIONS.

ESTABLISHMENTS.

Simla, the 27th August 1931.

No. F. 34/12/31.—The following resolutions made by the Secretary of State for India in Council are published for general information:—

I. In exercise of the powers conferred by sub-section (2) of section 96B of the Government of India Act, the Secretary of State, with the concurrence of the majority of votes at a meeting of the Council of India held this 17th day of February 1931, hereby makes the following amendments in the Superior Civil Services Rules, namely:—

1. In Schedule I to the said rules:—

(*i*) In the heading of the entry relating to Transportation (Traffic) and Commercial and Publicity Departments, State Railways, including military officers holding posts borne on the cadre thereof, and Medical Department, Great Indian Peninsula Railway, the words "and Medical Department, Great Indian Peninsula Railway" shall be omitted; and

(*ii*) Note 7 appended to the said entry shall be omitted;

(*iii*) After the said entry the following entry shall be inserted, namely:—

"2-A.—MEDICAL DEPARTMENT, STATE RAILWAYS."

(*Monthly Rates of Pay.*)

Year of service.	Basic pay.	Overseas pay. If drawn in Sterling.	Overseas pay. If drawn in Rupees.
	Rs.	£	Rs.
1st	... 500	...	150
2nd	... 525	...	150
3rd	... 550	...	150
4th	... 575	...	150
5th	... 600	15	150
6th	... 650	15	150
7th	... 700	25	250
8th	... 750	25	250
9th	... 800	25	250
10th	... 850	25	250
11th	... 900	25	250
(Efficiency Bar.)			
12th	... 950	30	250
13th	... 1,000	30	250
14th	... 1,050	30	250
15th	... 1,100	30	250
16th	... 1,150	30	250
17th	... 1,200	30	250
18th	... 1,250	30	250
19th	... 1,300	30	250
20th	... 1,350	30	250
21st	... 1,400	30	250
22nd	... 1,450	30	250
23rd and over	... 1,500	30	250

Note 1.—Officers appointed to the Burma Railways prior to the 1st March 1930 shall receive additional pay at the rate of Rs. 50 per mensem while drawing pay up to and including the eleventh year of service and at the rate of Rs. 75 per mensem thereafter.

Note 2.—(*i*) The above scale of basic and sterling overseas pay shall apply to officers of non-Asiatic domicile appointed on or after the 1st April 1930:

Provided that the Governor-General in Council may, with the consent of the officer concerned, direct that the said scale shall apply to any officer of non-Asiatic domicile appointed before the 1st April 1930, and may determine the stage which such officer shall occupy in the scale.

(*ii*) The above scale of basic pay shall apply to officers of Asiatic domicile appointed on or after the 1st April 1930:

Provided that the Governor-General in Council may, with the consent of the officer concerned, direct that the said scale shall apply to any officer of Asiatic domicile appointed before the 1st April 1930, and may determine the stage which such officer shall occupy in the scale. Any such officer who was, immediately before the 1st April 1930, entitled to draw rupee overseas pay, or a special allowance or additional pay in lieu of overseas pay, shall in addition draw rupee overseas pay on the above scale at and from the stage so determined.

Note 3.—Subject to the provisions of Note 2, officers of the Great Indian Peninsula Railway appointed prior to the 1st April 1926 shall draw pay on the scale applicable to the Transportation (Traffic) and Commercial Department, State Railways.

Note 4.—Subject to the provisions of Note 2, the following scale shall apply to officers of the East Indian Railway appointed prior to the 1st April 1926, namely:—

(Officers of non-Asiatic domicile and those officers of Asiatic Domicile who were appointed before the 1st April 1924.)

Grade I.

Year of service.	Basic pay.	Sterling overseas pay.
	Rs.	£
1st	... 700	25
2nd	... 750	25
3rd	... 800	25
4th	... 850	25
5th	... 850	30
6th	... 900	30
7th to 10th	... 950	30
11th and subsequent years	1,050	30

Grade II.

Basic pay—Rs. 650. Sterling overseas pay, £15.

2. In Schedule III to the said rules under the heading "Central Services"—

(*i*) to the entries relating to the Railway Department, the entry "Chief Medical and Health Officers" shall be added, and

(*ii*) in the said entries the entry "Chief Medical Officer, Eastern Bengal Railway," shall be omitted.

And the said amendments shall be deemed to have been made, with effect from the 1st April 1930.

II. In exercise of the powers conferred by section 96B (*2*) of the Government of India Act, the Secretary of State with the concurrence of the majority of votes at a meeting of the Council of India held this 14th day of July 1931, hereby makes the following amendments to the Superior Civil Services Rules:—

I. In Schedule I to the said rules under the heading "*Miscellaneous Posts*," after the entry relating to the Port Officer, Madras Minor Ports, the following entry shall be inserted, namely:—

"Warden of Fisheries, Punjab (while held by Mr. C. H. Donald), basic pay Rs. 550—50—1,050, overseas pay £25."

II. In Appendix A to Schedule IV of the said rules, under the heading B—*Posts*, after the entry relating to the Port Officer, Madras Minor Ports, the following entry shall be inserted, namely:—

"Warden of Fisheries, Punjab (while held by Mr. C. H. Donald)."

And the rules shall have effect and shall be deemed always to have had effect, as if they had been enacted as so amended.

No. F. 86/31.—The following resolution made by the Secretary of State for India in Council is published for general information:—

In exercise of the power conferred by subsection (*2*) of section 96B of the Government of India Act, the Secretary of State, with the concurrence of the majority of votes at a meeting of the Council of India held this 21st day of July 1931, hereby makes the following amendments in the Superior Civil Services Rules, namely:—

(*i*) In Table A of Schedule VIII to the said rules in the section under the head "Madras" the entry relating to the Inspector of Municipal Councils and Local Boards and Registrar General of Panchayats shall be omitted.

This amendment shall be deemed to have had effect from the 26th August 1930.

(*ii*) In Schedule VII to the said rules, in Part 2 of Section B, under the head "Government of India"—

(*a*) under the sub-head "*Inferior Posts*" for the word "Nil" the following shall be substituted, namely:—

"1 Assistant* Commissioner and Superintendent, Cellular Jail, Port Blair.

1 Assistant* Commissioner, Port Blair."

(*b*) In the footnote for the words "The post of Assistant Director, Intelligence Bureau" the words "These posts" shall be substituted.

(*iii*) In Table B of Schedule VIII to the said rules, to the entry in the section relating to "Government of India" the following entries shall be added, namely:—

"Assistant Commissioner Junior and Superintendent, Cellular Jail, Port Blair.	100, subject to a maximum of Rs. 800 inclusive of overseas pay, *plus* 150 for holding charge of the Cellular Jail.
Assistant Commissioner, Junior Port Blair.	100, subject to a maximum of Rs. 800 inclusive of overseas pay."

H. W. EMERSON,

Secy. to the Govt. of India.

ARMY DEPARTMENT.

Simla, the 29th August 1931.

Part B.

No. 523.—The following appointments are made:—

* * * *

AUXILIARY FORCE, INDIA.

The undermentioned officers designate of the A. I. R. O. are granted tempy. commissions for the periods noted against their names:—

Calcutta Light Horse.

To be Lt.

Raymond Langdon Carter Foottit. From 10th to 25th Mar. 1931.

* * * *

The Calcutta Scottish.

To be Lt.

Wavell Henry Dewis. From 17th July to 1st Aug. 1931.

G. M. YOUNG,

Secy. to the Govt. of India.

The Calcutta Gazette

THURSDAY, SEPTEMBER 10, 1931.

Part IB

Educational Notices.

Results of the Departmental Examination of Educational officers in Account Rules and Practice held in June 1931.

The 31st August 1931.

The undermentioned officers of the Education Department have passed the Departmental Examination of Educational officers in Account Rules and Practice held on the 29th June 1931 :—

(Arranged alphabetically.)

Name.		Designation.
Maulvi Abdul Aziz Sarkar	..	Special Sub-Inspector of Maktabs, Murshidabad.
Maulvi Abdul Jabbar	..	Subdivisional Inspector of Schools, Jessore.
Banerjea, Babu Mahim Chandra	..	Subdivisional Inspector of Schools, Murshidabad.
Bhattacharjea, Babu Kedar Nath	..	Subdivisional Inspector of Schools, Nadia.
Biswas, Babu Jatindra Mohan	..	Assistant Master, Uttarpara Government High School.
Chatterjea, Babu Kesab Chandra	..	Officiating Subdivisional Inspector of Schools, Hooghly Sadar.
Das, Babu Prafulla Chandra	..	Headmaster, Naogaon Guru-Training School.
Das Gupta, Babu Bidhu Bhusan	..	Assistant Headmaster, Dacca Collegiate School.
Ghosal, Babu Panchu Gopal	..	Officiating Assistant Headmaster, Sanskrit Collegiate School.
Ghose, Babu Pramatha Nath	..	Subdivisional Inspector of Schools, Pabna Sadar.
Jha, Babu Jogendra Nath	..	Subdivisional Inspector of Schools, Rajshahi Sadar.
Maulvi Moslehuddin Ahmed	..	Subdivisional Inspector of Schools, Dacca Sadar.
Mukherjea, Babu Goposwar	..	Assistant Master, Ballyganj Government High School.
Ray, Babu Satyendra Nath	..	Sub-Inspector of Schools, North Khulna.
Sarkar, Babu Chandra Kumar	..	Assistant Clerk, office of the Inspector of Schools, Dacca Division.
Sarkar, Babu Krishna Chaitanya	..	Assistant Master, Barasat Government High School.
Sen, Babu Uma Prasad	..	Assistant Master, Hooghly Branch School.

Name.		Designation.
Sen Gupta, Babu Abani Ranjan	..	Officiating Assistant Headmaster, Hooghly Branch School.
Sen Gupta, Babu Mani Mohan	..	Assistant Master, Khulna Zilla School.
Miss Sophia Qazi	..	Assistant Inspectress of Schools, Dacca Division, Mymensingh.
Maulvi Taufiruddin Ahmed	..	Subdivisional Inspector of Schools, Rangpur Sadar.

The undermentioned officers of the Education Department have passed in the Second Paper but have failed in the First Paper in the Examination held on the 29th June 1931. They will be required to take the First Paper only in the next examination :—

(Arranged alphabetically.)

Name.		Designation.
Maulvi Muhammad Abbas	..	Subdivisional Inspector of Schools, Kishoreganj.
Maulvi Ramzanul Islam	..	Clerk, Junior Madrassa, Dacca.

The undermentioned officers of the Education Department have passed in the First Paper but have failed in the Second Paper in the Examination held on the 29th June 1931. They will be required to take the Second Paper only in the next examination :—

(Arranged alphabetically.)

Name.		Designation.
Bhattacharjea, Babu Panchanan	..	Assistant Headmaster, Howrah Zilla School.
Biswas, Babu Kunja Bihari	..	Assistant Master, Chittagong Collegiate School.
Chakrabarti, Babu Kshetra Gopal	..	Subdivisional Inspector of Schools, Katwa.
Chatterjea, Babu Jugal Kishore	..	Assistant Headmaster, Bankura Zilla School.
Deb, Babu Abinas Chandra	..	Subdivisional Inspector of Schools, Chandpur.
Guha, Mr. Jatindra Chandra	..	Assistant Headmaster, Pabna Zilla School.
Maulvi Helaluddin Ahmed	..	Clerk, Dacca Government Moslem High School.
Kar, Mr. Manmatha Nath	..	Subdivisional Inspector of Schools, Jalpaiguri Sadar.
Mukherjea, Babu Santosh Kumar		Assistant Clerk, Office of the Inspectress of Schools, Dacca Circle.
Maulvi Nur Muhammad	..	Clerk, Chittagong Madrassa.
Ray, Babu Atul Kumar	..	Subdivisional Inspector of Schools, Pirojpur.
Sen, Babu Kumud Nath	..	Officiating Assistant Headmaster, Taki Government High School.
Maulvi Zahid Ali Khan	..	Officiating Assistant Headmaster, Nawab Bahadur's Institution, Murshidabad.

The undermentioned officers of the Education Department who failed in the Second Paper in the examination held on the 8th November 1930 have passed in that Paper in the examination held on the 29th June 1931 and are declared to have passed the Departmental Examination :—

(Arranged alphabetically.)

Name.		Designation.
Maulvi Abdul Mannan	..	Assistant Headmaster, Anglo-Persian Department, Calcutta Madrasa.
Maulvi Ataur Rahman	..	Subdivisional Inspector of Schools, Narainganj.
Chakrabarti, Babu Bipin Chandra	..	Assistant Headmaster, Jhalakati Government High School.
Chatterjea, Babu Keshi Sudan	..	Sub-Inspector of Schools, Alipore, I.
De, Babu Nitai Chand	..	Clerk, District Inspector of Schools, Hooghly.
Maulvi Hazari Shaikh	..	Assistant Master, Krishnagar Collegiate School.
Kushari, Babu Kshitish Chandra	..	Sub-Inspector of Schools, Barrackpore.
Mukherjea, Babu Girindra Nath	..	Assistant Headmaster, Krishnagar Collegiate School.

J. M. BOTTOMLEY,

Director of Public Instrn., Bengal (offg.).

Education Department, Bengal.

ERRATUM.

Calcutta Madrasah, 3rd September 1931.

In the list of Endowed Prize Winners for Muhammadans, 1930, published in *Calcutta Gazette*, dated the 26th March 1931 and 2nd April 1931, on pages 349 and 255, respectively,

For

3 Abdul Aziz, Calcutta Madrasah, Norman Memorial Prize, Rs. 20

please read

3 Athar Husain, Calcutta Madrasah, Norman Memorial Prize, Rs. 20.

M. HEDAYET HOSAIN,
Principal, Calcutta Madrasah.

Orders by the Vice-Chancellor and Syndicate of the Calcutta University.

NOTICE.

Senate House, the 3rd September 1931.

The undermentioned candidate is admitted to the Degree of Doctor of Philosophy. The titles of his theses submitted to and approved by the Board of Examiners are also given below:—

B. Ramchandra Rau.

Main thesis.

"Early Banking Institutions in Bombay and their lessons—1720-1857."

Subsidiary theses.

(1) Organised Banking in the days of John Company.

(2) Present-day Banking in India, and also the following books and monographs:—

(*i*) Elementary Banking,

(*ii*) Economics of the Leather Industry,

(*iii*) Some Currency Lessons of the War,

(*iv*) The Future of our Agricultural Industry,

(*v*) Banking Legislation and

(*vi*) Man, Money and Banking or Our Banking Messiah.

N. SEN,
Controller of Examinations.

University of Dacca.

NOTIFICATION No. 1000Ex.

Ramna, Dacca, the 31st August 1931.

The next B.L. Examinations (Preliminary Examination, Examination in Part II, and the Final B.L. Examination) will commence on the 4th January 1932.

2. Applications for admission to the examinations must be made on the printed entry forms which will be obtainable at the office of the Provost of Hall to which the student belongs. The entry form, after it has been duly filled in and signed by the candidate and countersigned by the Dean of the Faculty of Law must be presented by the candidate to the Provost of his Hall—

(*i*) in the case of candidates who did not appear at the B.L. Examinations held in July and August 1931, not later than 21st September 1931, and

(*ii*) in the case of students who appeared at the B.L. Examinations in July and August 1931, not later than the 8th October 1931.

3. Candidates must submit their University diplomas along with their entry forms to the Provost for verification of the correctness of their names in the entry forms. Candidates must take back their diplomas attached to their examination entry form within a fortnight after the examination is over, failing which the Provost offices will not be responsible for their safe keeping. The entry forms will be checked by the Provosts in respect of all the entries made by the candidates in the entry forms. The date of first admission of candidates into the University must be checked by the Provosts with reference to the application for admission of the candidates concerned. In the case of candidates who have been granted special permission to appear at the examination, the authority granting them such permission must be quoted in the entry forms of the candidates and duly attested by the Provost. *The checking of entry forms by the Provosts will be regarded as final.* The entry forms after they have been checked by the Provosts shall be forwarded by them to the Accounts office of the University not later than Tuesday, the 13th October 1931.

4. The candidates who are required to pay half the usual examination fees under section 33 of Chapter XXIII of the Ordinances and Regulations must attach to the entry form a certificate obtained from the examination section of the University to the effect that they submitted their examination fees but could not appear at the examination.

5. Candidates must deposit their proper examination fees and all other dues up to the month of January 1932, to the Accounts office of the University on the dates noted below for certification that all University dues

including the seat-rent, tuition fees, etc., have been paid in full—

Dates for the payment of fees.

Time 11-30 a.m. to 2 p.m.

Dacca Hall ..	(1) Attached .. (2) Resident.	16th and 17th November 1931.
Jagannath Hall..	(1) Attached .. (2) Resident.	17th and 18th November 1931.
Salimullah Muslim Hall.	(1) Attached .. (2) Resident.	18th and 20th November 1931.

6. The fees for the different examinations are noted below:—

(*i*) Preliminary B.L. Examination—Rs. 45.
(*ii*) B.L. Examination, Part II—Rs. 45.
(*iii*) Final B.L. Examination—Rs. 45.
(*iv*) B.L. Examination for candidates appearing in eleven papers only—Rs. 90.

The fee for a Supplementary Examination is half the ordinary examination fee.

7. The Accounts office will send all the entry forms of the candidates who have paid their examination fees and other dues, if any, to the examination section by *Tuesday, the 1st December 1931, at the latest.*

N.B.—Examination fees and other dues must be paid on the due dates and no extension of time will be allowed under any circumstances whatsoever. Candidates are required to pay the examination fees and other dues into the Accounts office of the University. If the fees are sent by postal money order, full details of candidate must be given and the correct amount due must be sent; otherwise the money order will be refused. Fees sent in any other way, *e.g.*, by registered or insured post, will not be accepted.

N. AHMAD, *Registrar.*

Programme of the Primary (Maktab) Final Examination, Dacca Division, 1931.

Dacca, the 18th August 1931.

Monday, 23rd November 1931.

Forenoon (10 a.m. to 12-45 p.m.)—

Bengali Literature, Grammar and Composition—80 marks.

Reading—25 marks (15+10).

12-45 to 1 p.m.—

Dictation—20 marks.

Afternoon (2 to 4-30 p.m.)—

History—75 marks.

Tuesday, 24th November 1931.

Forenoon (10 a.m. to 1 p.m.)—

Arithmetic and Subhankari—80 marks.

1 to 1-30 p.m.—

Mental Arithmetic—20 marks.

Afternoon (2 to 4-30 p.m.)—

Geography (Oral)—75 marks.

Wednesday, 25th November 1931.

Forenoon (10 a.m. to 12-30 p.m.)—

Hygiene—75 marks.

Afternoon (2 to 4-30 p.m.)—

Zamindari and Mahajani (Optional)—75 marks.

Thursday, 26th November 1931.

Forenoon (10 a.m. to 12-30 p.m.)—

Urdu and Ritual (Oral)—(75) and optional subject Drawing (75).

Afternoon—Optional subjects (Oral) (12-30 to 4-30 p.m.)—

English (75), Manual Work (75), Science (75) and Nature Study (75).

M. M. BAKSH,

Inspector of Schools, Dacca Division.

Board of Intermediate and Secondary Education, Dacca.

NOTIFICATIONS.

Ramna, the 25th August 1931.

Special Senior Scholarships for Muhammadans, 1931.

No. 4261.—The following students are awarded special senior scholarships for Muhammadans on the results of the Intermediate Examinations, 1931, conducted by the Board of Intermediate and Secondary Education, Dacca. The scholarships take effect from the 1st July 1931, and are tenable for three years at the University of Dacca:—

Six Scholarships of Rs. 10 a month each.

Dacca Intermediate College.

1 Muhammaduzzaman.
2 Golam Rabbani.
3 Abdul Hamid.
4 Khan Muhammad Idris Hossain.
5 Abul Fazl Mahtabuddin.

Jagannath Intermediate College.

6 Abu Syed Khan.

Special Senior Scholarships for Muhammadans, 1931.

No. 4265.—The following students are awarded the above scholarships on the results of the Intermediate Examinations, 1931, conducted by the Board of Intermediate and Secondary Education, Dacca. The scholarships take effect from the 1st June 1931, and are tenable for two years at the University of Dacca:—

Two Scholarships of Rs. 10 a month each.

Dacca Intermediate College.

Syed Ahmad Choudhury.
Muhammad Osman Ghani.

Ramna, the 26th August, 1931.

Five Scholarships of Rs. 15 a month each.

No. 4293.—The following students are awarded the above scholarships on the results of the Intermediate Examination in Group "C" conducted by the Board of Intermediate and Secondary Education, Dacca, in 1931. The scholarships take effect from the 1st July 1931, and are tenable for three years at the University of Dacca:—

Dacca Islamic Intermediate College.

1 Sheikh Abdul Hafiz.

Serajganj Islamic Intermediate College.

2 Nurul Islam.
3 Muhammad Yakub Ali.

Dacca Islamic Intermediate College.

4 Shamsuddin Ahmad.
5 Muhammad Abdur Rashid.

A. RAHMAN, *Secretary.*

Board of Apprenticeship Training.

Calcutta, the 29th August 1931.

Apprenticeship Admission Examination—June 1931.

The following candidates are declared to have passed the Admission Examination of the Board of Apprenticeship Training held in June 1931:—

(In order of merit.)

Order of merit.	Name.	Age on 1st June 1931.
	1ST CLASS.	Y. M.
1	Ram Das Mazumdar	.. 16 8
2	Lawrence P. S. Keelan	.. 17 6
3	Sudhansu Bhusan Mitra	.. 18 7
4	John Irvin Middleton	.. 17 4
	2ND CLASS.	
1	Tickran Mansur	.. 18 0
2	Pradyat Kumar Sanyal	.. 18 7
3	Tarak Ranjan De	.. 17 6
4	Darrel George Francis	.. 18 5
5	Indrajit Ghose	.. 18 7
6	Gadadhar Sil	.. 18 11
7	Sudhansu Sekhar Bandhopadhay	.. 18 4
8	Denzil Thomas	.. 18 2
9	Donald E. Wilson	.. 17 5
10	Provakar Banerjee	.. 18 5
11	Sailendra Bhusan Ghosh	.. 18 0
12	Sudhangsu Kumar Mitra	.. 17 8
13	Aphook Hing	.. 17 7
14	Balai Chandra Bhar	.. 17 4
15	Cyril Edmund Gomes	.. 18 3
16	Maurice R. C. Edge	.. 18 0
17	Maurice Charles Curtis	.. 18 4

NOTE.—In accordance with the Board's rules the names of overage candidates, who have passed the examination, are *not* included in this list. In the cases of such overage candidates the result of the examination has been communicated to the firms sending them for the examination.

Calcutta, the 1st September 1931.

The following candidates are declared to have passed the Diploma Examination in Mechanical and Electrical Engineering, Bengal Engineering College, held in July 1931:—

(In order of merit.)

1 Amulya Dhan Deb.
2 Bibhuti Bhusan Ghosh.
3 Sunil Kumar Mitra.
4 Sunil Ranjan Das.
5 Kshitish Chandra Guha Roy.
6 Ranajit Kumar Sen.
7 Gunendra Nath Chatterjee.
8 Benoy Krishna Das.
9 Karunamoy Biswas.
10 Sat Kari Mitra.
11 Ramendra Sunder Mojumdar.

ON SECOND TRIAL.

(In alphabetical order.)

1 Mohini Mohan Ghosh.
2 Sachindra Nath Roy.

The following candidates are declared to have passed the Associateship Examination in Mechanical Engineering, Bengal Engineering College, held in July 1931:—

(In order of merit.)

1 Rakhal Chandra De.
2 Michael Arthur Smith.
3 Nobin Chandra Barooah.

E. J. HOGBEN,

Secy., Board of Apprenticeship Training.

Board of Intermediate and Secondary Education, Dacca.

Dacca, the 14th August 1931.

Intermediate Examination, 1933.

GROUP C.

I. ENGLISH.

Archbold and Chatterjee. English Poetry for Indian Students (Art Press, Calcutta). The following selections, viz.—

William Collins. How sleep the Brave.
William Cowper. The Diverting History of John Gilpin.
William Wordsworth. The Daffodils.
Thomas Moore. Pro Patria Mori.
Lord Byron. On the Castle of Chillon.
Percy Bysshe Shelley. Music when soft voices die.
John Keats. To one who has been long in city pent.
Rupert Brooke. The soldier.
Sarojini Naidu. In the Bazars of Hyderabad.
Rabindranath Tagore. Morning.

D. C. Sharma. Selections from Modern English Prose (U. C. Kapur and Sons, Lahore). The following selections, viz.—

Robert Southey. The death of Nelson.
Lord Macaulay. The impeachment of Warren Hastings.
James Anthony Froude. The youthful Henry VIII.
J. R. Green. Elizabeth.
George Eliot. The death of Maggie and Tom.
Charles Reade. The gallows.
R. D. Blackmore. Harvest.
Mrs. Gaskell. Cranford Society.
Charles Dickens. A Joy ride.
A. W. Kinglake. The dead sea.
Wilkie Collins. The Count and Countess Fosco.
Meadows Taylor. The initiation of a Thug.
R. L. Stevenson. The green donkey-driver.
John Petherick. A Sheikh.
E. V. Lucas. Conjuror and Confederate.
Francis Brett Young. A scene in East Africa.
Philip Guedella. Fez.

H. W. Fowler. King's English (Abridged) (Oxford University Press) (Leaving out Chapters III and IV) is recommended for use by all students.

II. VERNACULAR.

(*Bengali.*)

Muhammad Barkatullah. Parashyaprativa. The following selections, viz., Parashya Sahitya, Fardusi, Sadi and Omar Khayyam.

Rabindranath Tagore. Loka Sahitya.

Rabindranath Tagore. Chayanika. The following pieces only are to be read, viz., Nirjharer Swapnabhanga, Barshar Dine, Ebar Firao More, Padma, Patita, Baisakh, Abirbhab, Kalyani, Siksha, Kunri, Prabasi, Chhutir Dine, Bharat Tirtha, Apaman, Shahjehan, Pratidan.

Saratchandra Chatterjee. Palli Samaj.

Book recommended :—

Mahamahopadhyay Prasanna Vidyaratna. Sahitya Prabesh Vyakarana.

(*Urdu.*)

Poetry.

Jalaluddin Ahmad Jafri. Qand-i-Urdu: Selections from (*i*) Mirza Rafee Sauda; (*ii*) Ibrahim Zauq; (*iii*) Mir Anis; (*iv*) Mirza Dabir; (*v*) Nawab Mirza Khan Dagh; (*vi*) A. H. Hali and (*vii*) Dr. Sir Muhammad Iqbal.

Prose.

Jalaluddin Ahmad Jafri. Qand-i-Urdu: Selections from (*i*) Shamsul Ulema Zukaullah; (*ii*) Sir Syed Ahmad Khan; (*iii*) Muhammad Hossain Azad and (*iv*) Abdul Halim Sharer.

III. ARABIC.

Poetry.

Busiri. Qasidat-ul-Burdah.
Farazdaq. Qasida on Imam Zain-ul-Abedin.
Diwan-i-Hassan. The following selections only:—

Quafiatul Alif, 32 lines, beginning with عفت ذات الا صابع فالجواء

Quafiatul Dal, 9 lines, beginning with اغر عليه للنبوة خاتم

Quafiatul Dal, 6 lines, beginning with والله ربى لا نفارق ما جداً

Quafiatul Dal, 18 lines, beginning with ما بال عينك لا تنام كانما

Quafiatul Meem, 17 lines, beginning with الله اكبر منا تبصر نبية

First 18 lines of the Qasidah, beginning with. اولئك قومى فان تسئلى

Prose.

The Prophet and Companions: Khutab, up to the beginning of the Khutbah of Amir Mu'awiah (selections by A. N. Waheed).
Abul Quasim Zamakh Shari. Maqamat (first ten Maqamat).
Louis. Ilmul Adab (Pages 4-114).

IV. FIQH and USUL.

Ibrahim Halabi. Multaqal Abhur from Kitabun-Nikah up to the end of Kitabus-Sarf (omitting Babu Nikahir-Raqiq, wal-Kafir, Kitabul 'Itq Kitabul-Hudood, Kitabus-Sariqah, Kitabus-Siar, Kitabul-Lian and Babul' Innin).

Sultan Bin Muhammad. Khulasat-ul-Usul—

(*i*) Ar-Rukun-ul-Awal, Ta'riful-Kitab (Al-Khass), Tarifuhu, Hukmuhu, Al-Amr, Hukmuhu, Al-Ada, Al-Qaza, Al-Husn, Al-Qubh, Al-Hasn-le 'Ainihi wal-Mulhaq bihi; Al Hasan le Ghairihi wal Mulhaq bihi; Ta 'rifun-Nahye wa Hukmuhu, Al-Manhiyu 'Anhule 'Ainihi wa le Ghairihi; Hassi yun wa Shary' iun, Ahkamuhu; Al-Mutlaq, Al-Muqayyad; (Al-Amm), Ta 'rifuhu, Hukmuhu, Qasrul-Amm, Takhsisul 'Amm, Hukumuhu Alfazul-'Umoom, Al-Mushtarak, Al-Jam'-ul-Munkar, Az-zahir, An-Nass, Al-Jam'-Mufassar, Al-Muhkam, Al-Khafiq, Al-Mushkal, Al-Mujmal, Al-Mutashabeha; Al-Haqiqat wal-Majaz, As-Sarih, Al-Kenayah, Ad-Dallu be 'Ibarathi wa be isharatihi, wa be Nassihi; (Babul-Bayan) Bayanut-Taqrir, Bayanut-Tafsir, Bayanut-Tagyir, Bayanuz-Zururah, Bayanut-Tabdil wa Aqsamuhu.

(*ii*) Ar-Ruknus-Sani.—Tarifus-Sunnah, Mutawatir, Mash-hoor, Khabarul-Ahad; Sharaitur-Rawi, Al-Kalam, a'lar-Rawi, Inqitaul'l-Hadis A'nin-Nabiy, At-Ta'an, fil-Hadis, Mahall-ul-Khabar, wa Anwau' hu, Fi'luhu 'Alaihis Salam, Taqriruhu, Alwahyu, Sharaiu' man Qablana, Taqlidus-Sahabiy.

(*iii*) Ar-Ruknus-Salis.—Al-Ijmaa', Ruknuhu Ahli-atu man, Yan' aqidu bihi, Shurutuhu, Maratibuhu, Sanaduhu.

(*iv*) Ar-Ruknur-Rabe'.—Al-Qeyas, Ta'rifuhu, Bayanu Hujjiatihi, Shurutuhu, Arkanuhu, Ma'rifatul-I'lalish-Shary'iah, An-Nass, Al-Ijma'u, Al-Munasabah, Al-I'llatul Mjuawizah wal-Mujibah, Al-Mua'razah wat-Tarijih, Mabhasul-Ijtihad.

V. HADIS (INCLUDING USUL-I-HADISI).

Shaikh Waliuddin. Mishkatul Musabih. The first Fasl of every Bab on the following:—

Kitabul Iman.—Kitabul-'Ilm, Kitabul-Taharat, Kitabus Salat, Kitabul-Janaiz, Kitabus-Zakat, Kitabus-Sawm, Kitabul-Manasik (Hajjatul-wid'a only).

Shaikh Abdul Haqq Muhaddis. Usul-i-Hadis. Al-Muqaddimah to Mishkat-ul-Masabiah.

VI. LOGIC.

No text-book is prescribed. The subject is to be studied in accordance with the syllabus. The following books are recommended for guidance:—

1. Molla Najmuddin Katibi. Shamsia.
2. Muhammad Musa. Taisirul Mantiq.
3. Abdullah Yazdi. Sharh-ut-Tahzib.

VII. KORAN and KALAM.

Al-Quran-ul-Karim, Surat-ul-Baqara and Ampara.

For Kalam no text-book is prescribed. The subject is to be studied in accordance with the syllabus. The following book is recommended:—

Molla Ali Qari. Shart-ull-Fiqhul Akbar.

VIII. ISLAMIC HISTORY.

No text-book is prescribed. The subject is to be studied in accordance with the syllabus. The following books are recommended:—

(1) History of the Saracens by Syed Amir Ali.

(2) Tarikhu Abil-Feda, 109-182.

A. RAHMAN, *Secretary*.

The Calcutta Gazette

THURSDAY, SEPTEMBER 10, 1931.

Part II

Advertisements.

Notices.

Advertisements, Notices, etc., intended for insertion in this Part of the Gazette cannot be received after noon of Saturday.

IMPERIAL BANK OF INDIA.

Statement of the affairs of the Imperial Bank of India on the 28th August 1931.

LIABILITIES.

	Rs.	A.	P.
Subscribed Capital ..	11,25,00,000	0	0
Capital paid up ..	5,62,50,000	0	0
Reserve ..	5,42,50,000	0	0
Public Deposits ..	19,59,87,000	0	0
Other Deposits ..	64,82,74,000	0	0
Loans against securities per contra ..	....		
Loans from the Government of India under section 20 of the Paper Currency Act, against Inland bills discounted and purchased per contra ..	....		
Contingent liabilities ..	....		
Sundries ..	1,19,78,000	0	0
	96,67,39,000	0	0

ASSETS.

	Rs.	A.	P.
Government Securities ..	29,80,69,000	0	0
Other authorized securities under the Act ..	2,76,77,000	0	0
Ways and Means Advances to the Government of India ..	....		
Loans ..	9,58,81,000	0	0
Cash Credits ..	26,61,29,000	0	0
Inland bills discounted and purchased ..	2,70,81,000	0	0
Foreign bills discounted and purchased ..	45,52,000	0	0
Bullion ..	....		
Dead stock ..	2,72,93,000	0	0
Liability of constituents for contingent liabilities per contra ..	....		
Sundries ..	38,94,000	0	0
Balances with other Banks ..	3,96,000	0	0
	75,09,72,000	0	0
Cash ..	21,57,67,000	0	0
	96,67,39,000	0	0

The above balance sheet includes :—

	£
Deposits in London ..	874,900
Advances and Investments in London ..	898,800
Cash and balances at other Banks in London ..	30,900

Percentage 25·19.

Bank rate 7 per cent.

OSBORNE A. SMITH,
Managing Governor.

(1844—1)

LAND SALE NOTICES.

Notification A.

NOTICE is hereby given, under sections 6 and 13, Act XI of 1859, that the undermentioned estates and shares of estates in the district of Hooghly will be put up for sale at the office of the Collector of that district on the 24th September 1931, at 12 noon, for arrears of revenue.

When in columns 5, 7 and 9 of the following statement it is stated that only a share is to be sold, it is to be understood that a separate account is kept for that share :—

Tauzi number.	Name of mahal and pargana.	Sadar jama of whole estate.	Whether the whole estate is to be sold.	If only a share is to be sold, specification of such share or shares.	Names of proprietors of property to be sold.	If only a share is to be sold, the sadar jama of such share.	If the whole estate is to be sold, the arrears due from it.	If only a share is to be sold, the arrears due from it.
1	2	3	4	5	6	7	8	9
		Rs. A. P.				Rs. A. P.	Rs. A. P.	Rs. A. P.
37	Hridayrampur, pargana Chowmahs	44,825 0 7	..	12 gandas share ..	Hemendra Lal Ray Chowdhury and others.	1,857 14 0	..	757 14 0
3 47	Sanchitara, pargana Pandua.	47,385 11 11	..	8 annas share of mauzas Jattrasiddhi, Jattrasiddhi *alias* new char, Balikismat Balichora, Kharija Osmanpur, Dumurdaha and char Madhusudanpur; 16 annas share of mauzas Saleswarpur, Haripur, Binodepur, Ekloki, Kismat Ekloki, Jamein Barijhatti, Patul, Khariji Khanpur, Daulatpur, Ramchandrapur Chakran, Kumdhara Mathurkur, Kirtinagore, Payan, Akutipota, Jotekusai, Rampur, Manpara, Ascharyapur, Dakshinpara Mahanad, Kagchipara, Rahimpurpara, Khariji proja of Radhakrishna Neogy, Salukgore, Kantalpara, Ghosepur, Ramanathpur Ramnathpur, Sunea, Duttapati, Serajabad *alias* Mayapur, Duttabati, Sarkerpati, Baluhatty, Baluhatihat Chandni, Bhaskur, Chak Gokulpur, Rat Chandni, Kristojote, Chaltpur, Panchdewli, Depaldighi, Balaldighi, Ramakantopur, Neali, Fatepur, Kristochandrapur, Lakshikantopur, Madanbati, Panchlol, Srimantapur Resena, Rampur *alias* Sahasar Rampur, Dehatti *alias* Sreemukhatti, Paranchapole, Paikpara, Lalitagori, Ramchandrapur, Brindaban Chak, Chongdarbandh, Naricha and Kusaljote.	Abani Nath Mookerjee.	23,764 14 7	..	3,022 8 11
72	Gopalnagore, pargana Jehanabad.	2,017 11 2	..	8 as. 0 g. 2 c. 2 kt. ..	Nalinakshya Mittra and others.	1,519 10 5	..	198 7 9
72B	Ditto ..	2,017 11 2	..	4 as. 3 g. 1 c. 1 kt. ..	Ditto ..	759 13 0	..	99 4 3
93	Srirampur, pargana Habeli.	2,071 1 11	..	7 as. 4 g. ..	Nirode Baran Ray and others.	1,322 2 6	..	28 15 1
127	Selampur Kismat, pargana Selampur.	776 15 6	..	15 as. 12 g. 3 c. 1 kr. 13 til	Surendra Nath Ghosal and others.	759 11 3	..	3 10 0
140	Radhanagore, pargana Khosalpur.	3,101 14 0	Whole	..	Hemendra Sinha and others.	..	103 6 4	..
4082	Kalupukhuria, pargana Jehanabad.	13,518 0 0	..	2 as. 13 g. 1 c. 1 kt. share of mauzas Ghesua and Basantapur; 1 a. 13 g. share of Joykristopur; 15 g. 3 c. 2 dt. share of Ghosepur.	Ratan Krishna Ray and others.	863 13 2	..	64 12 3
4082 B	Ditto ..	13,518 0 0	..	2 as. 13 g. 1 c. 1 kt. share of mauzas Kalupukhuria, Ghesua, Ghosepur, Debkhanda, Basantapur, Mamudpur and kismat Jaykristopur.	Nakur Chandra Ray and others.	2,253 2 6	..	296 4 5
4082 B	Ditto ..	13,518 0 0	..	2 as. 13 g. 1 c. 1 kt. share of mauzas Kalupukhuria, Debkhanda and Mamudpur.	Srimati Giribala Dassi.	544 0 0	..	71 8 9

All other shares than that specified will be excluded from the sale.

Temporarily-settled estates (settled with proprietors for 15 years from 1st April 1922).

2025	Rampur char, pargana Raipur.	858 0 0	Whole	..	Bepin Behari Mazumdar, Receiver to the estate of Brindaban Chandra Thakur of Guptipara.	..	214 8 0	..
2027	Kristobatty new char, pargana Raipur.	2,105 0 0	Do.	..	Ditto ..	..	1,578 12 0	..
2035	Kristobatty char, pargana Raipur.	1,639 0 0	Do.	..	Ditto ..	..	1,229 4 0	..

The estates are being advertised for sale for instalments of revenue which were due on or before the 30th Jaistha 1338 of which the latest date of payment was the 28th June 1931.

Chinsura, the 22nd August 1931.

G. C. MAZUMDAR, *for* Collector.

Notification A.

NOTICE is hereby given, under sections 6 and 13 of Act XI of 1859, that the undermentioned estates and shares of estates in the district of Birbhum will be put up for sale at the office of the Collector of that district on the 26th September 1931, at 12 noon, for arrears of revenue and other demands which by law are realizable as arrears of land revenue.

When in columns 5, 7 and 9 of the following statement it is stated that only a share is to be sold, it is to be understood that a separate account is kept for that share :—

Tauzi number.	Name of mahal and pargana.	Sadar jama of whole estate.	Whether the whole estate is to be sold.	If only a share is to be sold, specification of such share or shares.	Names of proprietors of property to be sold.	If only a share is to be sold, the sadar jama of such share.	If the whole estate is to be sold, the arrears due from it.	If only a share is to be sold, the arrears due from it.
1	2	3	4	5	6	7	8	9
		Rs. A. P.				Rs. A. P.		Rs. A. P.
4	Senbhum, pargana Senbhum.	41,132 10 0	..	16 annas share of mauza Adityapur and 6 others; 7 a. 6 gd. 2 kranti share of mauzas Nachansa, Hirsgaunj chak and Sadipur; 6 a. 13 gd. 1 c. 1 kr. share of Gidhgram; 2 a. 4 gd. 1 c. 2 kr. 1 danti share of Jungle Chowpahari Jungle Kati, Anandabazar; 2 a. 12 gd. 1 c. 1 kr. share of Raipur and 2 a. 18 gd. 3 c. 2½ danti share of mauza Radhanagar *alias* Adampur in residuary share excepting separate account Nos. 1 to 21 of the estate All other shares than that specified will be excluded from the sale.	Sourindra Narayan Sinha and others.	2,017 6 8	..	459 5 11
4	Ditto ..	41,132 10 0	..	8 annas share of mauzas Khirai *alias* Kerai, Chowmondal, Chhatarbandi, Prosadpur and Balnchi chak and Hanara in separate account No. 1. All other shares than that specified will be excluded from the sale.	Pramila Bala Debi and others.	849 0 8	..	27 8 6
4	Ditto ..	41,132 10 0	..	16 annas share of mauzas Udaypur and 54 others; 5 a. 0 gd. 2 c. 2 kranti share of mauzas Jungle Chowpahari Jungle Kati, Anandabazar, Lalagaunj, Nowagram Mal Jungle Chowpahari, Raipur and Radhanagar *alias* Adampur in separate account No. 3. All other shares than that specified will be excluded from the sale.	Subhasini Dasi	15,577 2 6	..	900 0 0
4	Ditto ..	41,132 10 0	..	16 annas share of mauzas Achhalpara and 16 others; 1 a. 15 gd. 2 cara 2 danti share of mauzas Jungle Chowpahari Jungle Kati, Anandabazar, Lalagaunj, Raipur and Radhanagar *alias* Adampur; 4 a. 16 gd. share of Hariharpur *alias* Mukunda in separate account No. 12. All other shares than that specified will be excluded from the sale.	Sarala Bala Sinha.	5,273 0 0	..	465 5 6
4	Ditto ..	41,132 10 0	..	8 annas share of mauzas Khorai *alias* Kerai and 5 others; 1 a. 15 gd. 2 c. 2 danti share of Jungle Chowpahari Jungle Kati, Anandabazar, Lalagaunj, Raipur and Radhanagar *alias* Adampur; 5 a. 2 gd. 2 cara share of Hariharpur *alias* Mukunda and 16 annas share of Maldipur in separate account No. 20. All other shares than that specified will be excluded from the sale.	Atul Chandra Ghosh and others.	1,882 4 4	..	108 1 4
16	Moheswarpur, pargana Senbhum.	12,897 8 7	..	16 annas share of mauzas Binandapur and 5 others; 5 a. 6 gd. 2 c. 2 kr. share of Khadempuskarini and 6 others in residuary share excepting separate account Nos. 1 to 9. All other shares than that specified will be excluded from the sale.	Sourindra Narayan Sinha and others.	700 15 6	..	115 14 7

Tauzi number.	Name of mahal and pargana.	Sadar jama of whole estate.	Whether the whole estate is to be sold	If only a share is to be sold, specification of such share or shares.	Names of proprietors of property to be sold.	If only a share is to be sold, the sadar jama of such share.	If the whole estate is to be sold, the arrears due from it.	If only a share is to be sold, the arrears due from it
1	2	3	4	5	6	7	8	9
		Rs. A. P.				Rs A P	Rs A P.	Rs A. P.
17	Kagza, pargana Moureswar Sabek.	17,174 0 8	..	15 gd. 2 cara 2 danti share of mauzas Amdapara chak and 54 others ; 1 gd. 1 c. 2 kr. 1½ danti share of mauzas Bansra and Bahadurganj in separate account No. 28. All other shares than that specified will be excluded from the sale.	Swet Barani Debi and others.	677 0 4	..	66 14 10
18	Kalikapur Krishnanagar, pargana Jainujal.	6,234 7 0	Whole estate 16 annas. share.	..	Syama Sundari Debi and others.	..	616 12 9	..
19	Kuniara, pargana Ichhapakhuria.	5,695 14 0	..	2 a 2 gd 8 danti share of mauzas Ulkunda and 9 others; 8 a. 17 gd 8 danti share of Golera; 3 a. 15 gd. 3 cara 8 danti share of Gatinathpur and 7 others ; 2 a. 13 gd. 1 c. 2 kr. 2 kag share of Darka nijjote Syamacharan Mukherjee and Sk. Delwar, *i.e.*, Kharija Darka and Mirband ; 10 a. 9 gd 2 c. 5½ danti share of Baharpur ; 5 a. 3 gd. 1 c. 2 kr. 2 kag share of Haripur in residuary share excepting separate account Nos. 1 to 13. All other shares than that specified will be excluded from the sale.	Kalikumar Banerji and others.	1,213 14 4	..	321 4 4
20	Panchpara, pargana Ichhapakhuria	4,062 5 0	..	3 annas share in separate account No. 1. All other shares than that specified will be excluded from the sale.	Mriganayani Debi and others.	761 11 0	..	48 11 3
21	Batta, pargana Jainujal.	10,852 12 0	..	6 annas share of mauzas Ulandi and 10 others, 9 a. 14 gd. share of Gunsima and 11 others in residuary share excepting separate account Nos. 1 to 6. All other shares than that specified will be excluded from the sale.	Harihar Nath Das and others.	3,357 0 7	..	184 0 6
25	Indus, pargana Kutabpur	5,687 2 8	..	2 a. 13 gd. 1 c. 1 kr. share in residuary share excepting separate account Nos. 1 to 7. All other shares than that specified will be excluded from the sale.	Kalikumar Banerji and others.	947 8 0	..	49 11 10
74	Kirtihat, pargana Khargram.	2,222 13 0	..	2 annas share of mauza Kalyanpur; 5 a. 1 g 2 cara 2½ danti 1 dip of Kalsi Kismat ; 4 a. 19 gd. 2½ danti 1 dip of Akuni *alias* Akundi, Keohat, Kirtihat, Kesedanga *alias* Kesia, Gidhila, Gaidharpur and Parbatipur ; 5 a. 4 gd. 3 cara 2½ danti share of Barua *alias* Hatchala, 4 a. 11 gd. 3 c. 6½ danti 1 dip share of Kankhra Kist, Kantadighi, Goalipara, Chandrahat, Jugsara, Tilpara, Nowapara, Fatehjangpur, Banipara, Mirzapur and Sultanpur, 1 a. 19 gd. 3 c. 8½ danti 1½ kara of a danti share of Kesabbati ; 4 a. 1 cara ½ danti 1 dip of Kasiara and Kurumba, 4 a. 3 gd. 3 cara ½ danti of Jokatya and Dongra ; 1 a. 6 gd. 1 cara share of Ramnagar; 8 a. 10 gd. 1 c. 3 kag 2½ danti of Raghabpur, Sukanpur and Subalpur ; 6 a. 7 gd. 3 kag 2½ danti 1 dip of Purano Mobu gram and 4 annas share of Khalil Rahoman in residuary share excepting separate account Nos. 1 to 11. All other shares than that specified will be excluded from the sale.	Ram Ranjan Hati and others.	543 10 2	..	39 1 5

Tauzi number.	Name of mahal and pargana.	Sadar jama of whole estate.	Whether the whole estate is to be sold.	If only a share is to be sold, specification of such share or shares.	Names of proprietors of property to be sold.	If only a share is to be sold, the sadar jama of such share.	If the whole estate is to be sold, the arrears due from it.	If only a share is to be sold, the arrears due from it.
1	2	3	4	5	6	7	8	9
		Rs. A. P.				Rs. A. P.	Rs. A. P.	Rs. A. P.
107	Punur, pargana Akbarsahi.	1,176 13 0	..	7 a. 18 gd. 3 c. share in residuary excepting separate account Nos. 5 and 6. All other shares than that specified will be excluded from the sale.	Danuja Dalani Debi and others.	583 12 10	..	17 10 6
111	Raswan, pargana Barra.	4,173 14 1	..	5 a. 19 gd. 3 cara 1 kr. 1 danti share in residuary excepting separate account Nos. 1 to 6 and 8 to 11. All other shares than that specified will be excluded from the sale.	Maharaja Bahadur Sing and others.	1,562 14 2	..	6 7 1
114	Bongram, pargana Barbaksing.	2,526 4 0	..	3 a. 4 gd. share in residuary excepting separate account Nos. 1 to 10. All other shares than that specified will be excluded from the sale.	Prabhas Chandra Mitra (Sebait).	505 3 11	..	50 7 0
125	Kanutia, pargana Swarupsing.	1,640 0 0	Whole estate 16 annas share.	..	Gobinda Chandra Mazumder and others.	..	162 6 0	..
158	Kadipur, pargana Kutabpur.	851 4 0	Ditto	..	Srish Chandra Choudhury and others.	..	80 4 0	..
172	Majhigram, pargana Khatanga.	3,422 4 0	..	12 annas share in residuary excepting separate account No. 1. All other shares than that specified will be excluded from the sale.	Munshi Zillar Rohoman.	2,566 11 0	..	193 11 0
172	Ditto ..	3,422 4 0	..	4 annas share in separate account No. 1. All other shares than that specified will be excluded from the sale.	Munshi Zillar Rohoman and others.	855 9 0	..	24 2 6
212	Syambati Saspur, pargana Swarupsing.	1,176 13 0	..	11 a. 7 gd. 2 cara 2 danti share in residuary share excepting separate account No. 1. All other shares than that specified will be excluded from the sale.	Bidhu Bhusan Choudhury and others.	836 13 6	..	44 3 10
240	Damdama, pargana Alinagar.	1,482 11 0	..	6 a. 5 gd. share in mauzas Damdama and 10 others in separate account No. 1. All other shares than that specified will be excluded from the sale.	Sudhangsu Bhusan Ray and others.	579 2 10	..	42 10 6
999	Birori, pargana Nowanagar.	632 8 11	Whole estate 16 annas share.	..	Nritya Kali Dasya	..	7 7 10	..
1221	Belhatti, pargana Barbaksing.	2,218 0 7	Ditto	..	General Secretary to the Indian Theosophical Society through Dwarika Nath and Kashinath Talang.	..	24 8 3	..
1269	Huda Paikar, pargana Nowanagar.	2,490 3 0	..	6 annas share in residuary share excepting separate account Nos. 1 to 3. All other shares than that specified will be excluded from the sale.	Bhupendra Kumar Sarkar and others.	933 13 1	..	48 13 2

Suri, the 20th August 1931.

[ILLEGIBLE], *for* Collector.

Notification A.

NOTICE is hereby given, under sections 6 and 13, Act XI of 1859, that the undermentioned estates and shares of estates in the district of Pabna will be put up for sale at the office of the Collector of that district on the 26th September 1931, at 12 noon, for arrears of revenue and other demands which by law are realizable as arrears of land revenue.

When in columns 5, 7 and 9 of the following statement it is stated that only a share is to be sold, it is to be understood that a separate account is kept for that share :—

Tauzi No.	Name of mahal and pargana	Sadar jama of whole estate.	Whether the whole estate is to be sold.	If only a share is to be sold, specification of such share or shares	Names of proprietors of property to be sold.	If only a share is to be sold, the sadar jama of such share.	If the whole estate is to be sold, the arrears due from it.	If only a share is to be sold, the arrears due from it.
1	2	3	4	5	6	7	8	9
		Rs. A. P.				Rs. A. P.	Rs. A. P.	Rs. A. P.
1744	K. Char Suriber, pargana Ishapsahi.	1,323 0 0	Entire 16 as. share of Suriber Char, i.e., share of the estate.	..	Atul Chandra Bose, receiver to the estate of Mathura Nath, Janaki Nath and Jamini Nath Roy Chaudhury.	..	55 2 6	..
1	Dehi Bhadraghat, pargana Ishapsahi.	1,951 8 0	Entire 16 as. share of the estate.	..	Abani Nath Ganguly and others.	..	123 7 6	..
272	K. Gayashbari, pargana Sonabaju.	504 6 0	Entire 16 as. share of the estate.	..	Hemanta Kumar Saha and others.	..	124 12 6	..
175	Taraf Shyampur, pargana Amirabad.	3,156 9 0	..	Residuary share .. 4 as. 19 gd. 2 c. 1 dip share of the estate.	Surendra Krishna Datta and others.	981 13 0	..	183 3 9
175	Ditto ..	3,156 9 0	..	Separate account No. 4 3 as. 8 gd. 1 c. 9 dip share of the estate.	Purna Chandra Chaudhury.	676 7 0	..	54 11 0
161	Newly accreted Char Bhati Raghunathpur, pargana Brahimpur.	740 5 0	Entire 16 as. share of the estate.	..	Biraja Sankar Majumdar and others.	..	15 9 0	..
104	Pargana Islampur, pargana Islampur.	24,323 6 0	..	*Separate account No. 1 8 as. share of the estate.	Puranchand Nahatta and others.	12,163 6 4	..	1,971 8 4
2182	Dehi Kashipur, pargana Mehamanshahi.	3,659 12 0	..	*Separate account No. 1 4 as. share of the estate.	Radhica Mohan Munshi and others.	914 15 0	..	76 5 3
2182	Dehi Kashipur, pargana Mehamanshahi.	3,659 12 0	..	*Separate account No. 5 8 as. share of the estate.	Sachindra Nath Sanyal.	686 3 5	..	57 4 0 Police— 1 6 8
121	Dehi Fulbari, pargana Bajurash Mahabhatpur.	778 6 10	Entire 16 as. share of the estate.	..	Raoshanara Khatun and another.	..	66 12 9	..

*All other shares than that specified will be excluded from the sale.

The above estates are advertised for sale for arrears of land revenue up to kist 30th Jaistha 1338 B. S., the last date of payment of which was 14th Ashar 1338 B. S.

Pabna, the 21st August 1931.

S. BANERJI, Collector.

Notification A.

NOTICE is hereby given, under sections 6 and 13, Act XI of 1859, that the undermentioned estates and shares of estates in the district of Dinajpur will be put up for sale at the office of the Collector of that district on the 26th September 1931, at 12 noon, for arrears of revenue and other demands which by law are realizable as arrears of land revenue.

When in columns 5, 7 and 9 of the following statement it is stated that only a share is to be sold, it is to be understood that a separate account is kept for that share :—

Tauzi No.	Name of mahal and pargana.	Sadar jama of whole estate.	Whether the whole estate is to be sold.	If only a share is to be sold, specification of such share or shares.	Names of proprietors of property to be sold.	If only a share is to be sold, the sadar jama of such share.	If the whole estate is to be sold, the arrears due from it.	If only a share is to be sold, the arrears due from it.
1	2	3	4	5	6	7	8	9
		Rs. A. P.				Rs. A. P.	Rs. A. P.	Rs. A. P.
63	Mahal Tarpa Mathurapur (Mathurapur Tarppey), pargana Tarpa Mathurapur.	7,647 0 9	Yes	..	Khitish Chandra Rai Chaudhuri and others.	..	502 10 8	..
65	Mahal Kholora, pargana Kholora.	18,001 12 5	No	6 as. 10 gds. Residuary share. All other shares, 9 as. 10 gds., shall be excluded from sale.	Girija Ballav Rai Chaudhury.	7,313 3 6	..	868 1 2
65	Ditto ..	18,001 12 5	No	9 as. 10 gds. Separate account No. 2. All other shares, 6 as. 10 gds., shall be excluded from sale.	Nagendra Behari Rai Chaudhury.	10,688 8 11	..	1,285 8 8
66	Mahal Hakandari, pargana Sashbir.	7,543 1 4	Yes	..	Maharaj Bahadur Singh and others.	..	341 8 7	..
76	Mahal Sankarpur, pargana Santosh.	40,329 4 0	No	8 as. Residuary share. All other shares, 8 as., shall be excluded from sale.	Maharaj Bahadur Sing Dugar, Trustee.	20,164 10 1	..	2,010 10 1
76	Ditto ..	40,329 4 0	No	2 as. 10 gds. Separate account No. 1. All other shares, 13 as. 10 gds., shall be excluded from sale.	Sarbamongola Debi	6,301 7 2	..	674 7 2
112	Mahal Palashbari, pargana Salbari.	7,824 10 9	Yes	..	Chaudhury Mahamed Amin and others.	..	317 11 3	..
117	Mahal Tajpur Kismat, pargana Tajpur.	12,613 11 0	Yes	..	Rani Rajnandini Saheba, executrix, and Surendra Nath Rai, executor of late Maharaj Kumar Bonwari Ananda Deb Bahadur's will.	..	(a) 7,656 15 2 (b) 798 11 0 8,455 10 2	..
180	Mahal Tepagaon, pargana Salbari.	6,531 2 9	Yes	..	Chaudhury Mahammed Amin and others.	..	319 14 5	..
182	Mahal Kashba Gobindanagar (Gobindanagar Kashba), pargana Salbari.	6,546 3 0	Yes	..	Ditto ..	..	319 2 6	..
184	Mahal Rajnagar, pargana Rajnagar.	5,191 10 11	Yes	..	Maharaj Bahadur Singh.	..	394 10 11	..
264	Mahal Mirjapur, pargana Gilahabari	6,893 14 4	Yes	..	Kumar Sarat Kumar Rai.	..	708 10 8	..
267	Mahal Bahamankunda, pargana Bahamankunda.	17,018 4 0	No	10 as. Separate account No. 3. All other shares, 6 as., shall be excluded from sale.	Maharaj Kumar Gopal Lal Rai.	10,636 6 6	..	520 9 6
456	Mahal Gangaprasad, pargana Sashbir.	5,931 15 7	Yes	..	Nripendra Chandra Chaudhury and others.	..	619 13 1	..
462	Mahal Safanagar, pargana Kardaha.	7,637 8 6	Yes	..	Sayad Badruddja, and others.	..	636 8 6	..

(a) Arrear land revenue payable before 1st Chaitra, 1337 B. S. (b) Arrear land revenue payable before 1st Ashar, 1338 B. S.

Dinajpur, the 22nd August 1931. L. C. GUHA, Collector.

Notification A.

NOTICE is hereby given, under sections 6 and 13, Act XI of 1859, that the undermentioned estates and shares of estates in the district of Dinajpur will be put up for sale at the office of the Collector of that district on the 26th September 1931, at 12 noon, for arrears of revenue and other demands which by law are realizable as arrears of land revenue.

When in columns 5, 7 and 9 of the following statement it is stated that only a share is to be sold, it is to be understood that a separate account is kept for that share :—

Tauzi No	Name of mahal and pargana	Sadar jama of whole estate.	Whether the whole estate is to be sold	If only a share is to be sold, specification of such share or shares	Names of proprietors of property to be sold	If only a share is to be sold the sadar jama of such share	If the whole estate is to be sold the arrears due from it	If only a share is to be sold the arrears due from it
1	2	3	4	5	6	7	8	9
		Rs A P				Rs A P	Rs A P	Rs A P
32	Mahal Joypur, pargana Deora	1,475 9 11	No	12 as residuary share All other shares, 4 as shall be excluded from sale	Priyanath Maitra	1,106 11 5	..	79 3 5
52	Mahal Durgapur, pargana Kardaha	6,472 5 7	No	2 as 13 gds 1 c 1 kt residuary share All other shares, 13 as 6gds 2 c 2 kt., shall be excluded from sale	Bhabosh Chandra Banerjee and others	1,078 11 8	..	89 11 8
52	Ditto ..	6,472 5 7	No	2 as 13 gds 1 c 1 kt Separate account No 5 All other shares, 13 as 6 gds 2 c 2 kt, shall be excluded from sale	Indumati Debi and others	1,078 11 7	..	90 11 7
59	Mahal Uriapara, pargana Rajnagar	4,625 4 11	No	13 as residuary share All other shares 3 as, shall be excluded from sale	Niyamatulla Chaudhury, mutwalli	3,758 0 11	..	273 0 11
59	Ditto ..	4,625 4 11	No	3 as .. Separate account No 1 All other shares, 13 as shall be excluded from sale	Ditto ..	867 4 0	..	63 4 0
85	Mahal Delwarpur pargana Delwarpur	8,879 2 0	No	5 as 6 gds 2 c 2 kt residuary share All other shares 10 as 13 gds 1 c 1 kt, shall be excluded from sale	Padmabati Dasi and others	2 959 11 4	..	332 5 0
85	Ditto ..	8,879 2 0	No	2 as 13 gds 1 c 1 kt Separate account No 3 All other shares 13 as 6 gds 2 c 2 kt, shall be excluded from sale	Bhaba Bhabini Dasi	1,479 13 8	..	166 13 4
105	Mahal Ghoraband, pargana Delwarpur	5,737 4 6	No	10 as 13 gds 1 c 1 kt. residuary share All other shares, 5 as 6 gds 2 c 2 kt., shall be excluded from sale	Janokinath Majumdar and others	3 824 13 8	..	445 13 8
106	Mahal Surjapur, pargana Salbari	5,478 11 0	No	8 as residuary share All other shares 8 as shall be excluded from sale	Dudhkumari Debya Chaudhurani guardian of minors Binode Behary Rai Chaudhury and others	2,739 5 6	..	235 10 8
121	Mahal Raghubandrapur pargana Sarhatta	2,537 8 8	Yes		Maharaj Bahadur Sing	..	258 8 8	..
124	Mahal Bhalukal, pargana Salbari	565 1 10	Yes	..	Naresh Chandra Mallick and others.	..	68 1 6	..
127	Mahal Pukhari (Pukry), pargana Gilahabari	1,696 12 8	Yes	..	Sailendra Nath Rai and others	..	254 12 8	..
130	Mahal Charkhonda, pargana Gilahabari	1,696 12 6	No	9 as 12 gds 2c. residuary share All other shares, 6 as 7 gds 2 c, shall be excluded from sale	Jadablal Chakraverty and others	1,020 11 6	..	112 5 6
133	Mahal Palashi, pargana Gilahabari	1,696 12 7	No	8 as residuary share All other shares, 8 as, shall be excluded from sale	Bhabesh Chandra Datta Chaudhury and others	848 6 3	..	127 6 3
136	Mahal Chorkai, pargana Sarhatta.	1,702 0 10	Yes	..	Maharaj Bahadur Sing.	..	173 0 10	..

Touzi No.	Name of mahal and pargana.	Sadar jama of whole estate.	Whether the whole estate is to be sold.	If only a share is to be sold, specification of such share or shares.	Names of proprietors of property to be sold.	If only a share is to be sold, the sadar jama of such share.	If the whole estate is to be sold, the arrears due from it.	If only a share is to be sold, the arrears due from it.
1	2	3	4	5	6	7	8	9
		Rs A. P.				Rs. A. P.	Rs. A. P.	Rs. A. P.
137	Mahal Bahula, pargana Bijanagar.	4,832 0 0	No ..	2 as. 13 gds. 1 c. 1 kt. residuary share. All other shares, 13 as. 6 gds. 2c 2 kt., shall be excluded from sale.	Bhabesh Chandra Bandopadhyay and others.	804 15 5	..	80 4 5
137	Ditto ..	4,832 0 0	No ..	2 as. 13 gds 1 c. 1 kt. Separate account No. 5. All other shares, 13 as 6 gds 2 c. 2 kt., shall be excluded from sale.	Indumati Debi and others.	805 11 6	..	86 0 6
161	Mahal Ramdebpur, pargana Phulbari.	3,187 10 0	No .	5 as Separate account No. 1. All other shares, 11 as., shall be excluded from sale.	Mahamed Hussen Talukdar as mutwalli.	996 4 3	..	103 14 3
169	Mahal Gochhatta, pargana Bajitpur.	7,155 8 0	No ..	5 as 6 gds. 2 c. 2 kt. Separate account No. 3. All others hares, 10 as 13 gds 1 c 1 kt , shall be excluded from sale.	Surendra Nrarain Chaudhury.	2,385 2 8	..	248 2 8
178	Mahal Lashkara, pargana Salbari.	3,788 13 10	Yes ..	..	Chaudhury Mahammad Amin and others.	..	137 3 2	..
181	Mahal Galahar, pargana Deora.	1,612 13 0	No ..	6 as. 8 p. residuary share. All other shares, 9 as. 4 pies, shall be excluded from sale.	Hara Chandra Das Deb Barman and others.	672 0 1	..	83 15 10
181	Ditto ..	1,612 13 0	No ..	5 as 4 p Separate account No. 2. All other shares, 10 as 8 p , shall be excluded from sale.	Padma Kamini Debya, guardian of minors Chandra Shekhar Das Deb Barman and others	537 9 8	..	49 9 7
189	Mahal Panchsala, pargana Bihinagar.	4,519 11 0	No ..	8 as. residuary share. All other shares, 8 as., shall be excluded from sale.	Brojo Dulal Dhar and others.	2,259 13 6	..	201 15 2
191	Mahal Shekhpura, pargana Rajnagar.	2,911 14 6	No ..	10 as residuary share. All other shares, 6 as., shall be excluded from sale.	Azimuddin Chaudhury and others.	1,819 15 1	..	160 15 1
197	Mahal Malancha, pargana Gilahabari.	3,349 7 3	Yes ..	..	Mohini Mohon Bandopadhyay and others.	..	197 8 1	..
198	Mahal Inatpur (Enaitpur), pargana Gilahabari.	1,745 3 6	No ..	7 as. 6 gds. 2 c. 2 kt Separate account No. 3. All other shares, 8 as., 13 gds. 1 c. 1 k., shall be excluded from sale.	Barada Kanta Gangopadhyay and others.	79 14 3	..	84 14 0
208	Mahal Chakdapatty (Dapati Chak), pargana Sultanpur.	3,590 3 2	Yes ..	....	Maharaj Bahadur Sing.	..	373 3 2	..
209	Mahal Karai (Korol), pargana Gilahabari.	3,244 1 5	No ..	10 as. 13 gds. 1 c. 1 kt. residuary share. All other shares, 5 as. 6 gds. 2 c. 2 kt., shall be excluded from sale.	Osmanaddin Chaudhury and others.	2,162 11 7	..	241 11 7
219	Mahal Bondanga, pargana Monoshow.	5,377 9 3	No ..	8 as. residuary share .. All other shares, 8 as., shall be excluded from sale.	Brojo Dulal Dhar and others.	2,688 12 7	..	262 11 2
219	Ditto ..	5,377 9 3	No ..	8 as. .. Separate account No. 1. All other shares, 8 as., shall be excluded from sale.	Sourindra Narain Dhar and others.	2,688 12 8	..	262 12 8
227	Mahal Jote Bani (Banijote), pargana Sultanpur.	7,189 11 4	No ..	8 as. residuary share .. All other shares, 8 as., shall be excluded from sale.	Chandra Nath Chatterji.	3,594 13 8	..	372 13 8
227	Ditto ..	7,189 11 4	No ..	8 as .. Separate account No. 1. All other shares, 8 as., shall be excluded from sale.	Surendra Nath Chattopadhyay.	3,594 13 8	..	372 13 8

Tauzi No.	Name of mahal and pargana.	Sadar jama of whole estate.	Whether the whole estate is to be sold.	If only a share is to be sold, specification of such share or shares.	Names of proprietors of property to be sold.	If only a share is to be sold, the sadar jama of such share.	If the whole estate is to be sold, the arrears due from it.	If only a share is to be sold, the arrears due from it.
1	2	3	4	5	6	7	8	9
		Rs. A. P.				Rs. A. P.	Rs. A. P.	Rs. A. P.
236	Mahal Surhar Manikar, pargana Surhar Manikar.	7,317 10 2	No ..	1 a. 6 gds. 2 c. 2 31/2040 kt. Separate account No. 2. All other shares, 14 as. 13 gds. 1 c. 2009/2040 kt., shall be excluded from sale.	Serajuddin Ahmed Chaudhury and others.	1,894 3 3	..	481 8 4
237	Mahal Daulatpur, pargana Rajnagar.	4,660 8 1	No ..	9 as. 7 gds. 2 c. residuary share. All other shares, 6 as. 12 gds. 2 c., shall be excluded from sale.	Niyamatulla Chaudhury, mutwalli.	2,730 12 3	..	202 4 3
237	Ditto ..	4,660 8 1	No ..	2 as. .. Separate account No. 2 All other shares, 14 as., shall be excluded from sale.	Ditto ..	582 9 0	..	43 1 0
237	Ditto ..	4,660 8 1	No ..	4 as. 12 gds. 2 c. .. Separate account No. 5. All other shares, 11 as. 7 gds. 2 c., shall be excluded from sale.	Ditto ..	1,347 2 10	..	99 2 10
238	Mahal Sultanpur, pargana Sultanpur.	1,718 4 10	No ..	14 as. 19 gds. 3 c. 1 kt. 1½ dt. residuary share. All other shares, 1 a. 1 kt. 1½ dt., shall be excluded from sale.	Sailendra Nath Rai and others.	1,610 3 10	..	279 3 10
249	Mahal Haribangsapur, pargana Deora.	1,615 11 5	Yes ..	....	Jadav Lal Chakraverty.	..	168 9 6	..
254	Mahal Shikristapur, pargana Phulbari.	3,474 5 0	No ..	4 as. .. Separate account No. 1. All other shares, 12 as., shall be excluded from sale.	Ashutosh Chakraverty and others.	868 9 3	..	66 15 9
256	Mahal Sindarhatta, pargana Gilahabari.	4,281 5 3	Yes ..	....	Kumar Sarat Kumar Rai.	..	434 5 3	..
263	Mahal Gobindapur, pargana Ghoraghat.	6,796 10 3	No ..	1 a. 4 p. share of Bainagar group of mauzas. Separate account No. 2. All other shares, 14 as. 8 p., of Bainagar group of mauzas shall be excluded from sale.	Shibendra Chandra Ghose and others.	513 2 5	..	(a) 181 1 5 (b) 51 8 4 232 9 9
263	Ditto ..	6,796 10 3	No ..	1 a. 4 p. share of Bainagar group of mauzas. Separate account No. 3. All other shares, 14 as. 8 p., of, Bainagar group of mauzas shall be excluded from sale.	Ditto ..	513 2 5	..	(a) 180 14 5 (b) 51 8 4 232 6 9
267	Mahal Bahamankunda, pargana Bahamankunda.	17,018 4 0	No ..	4 as. 2 gds 2 c. residuary share. All other shares, 11 as. 17 gds. 2 c., shall be excluded from sale.	Kali Kinkar Nag and others.	4,387 8 4	..	(a) 1,268 10 8 (b) 215 5 7 1,484 0 3
267	Ditto ..	17,018 4 0	No ..	1 a. 4 gds. 2 kt. .. Separate account No. 1. All other shares, 14 as. 11 gds. 3 c. 1 kt., shall be excluded from sale.	Mahamed Hossain Talukder, mutwalli.	1,285 3 8	..	63 3 8
271	Mahal Roysali, pargana Khorasi.	4,049 11 8	No ..	6 as. .. Separate account No. 1. All other shares, 10 as. shall be excluded from sale.	Chandra Nath Chattopadhyay and others.	1,743 10 5	..	182 10 5
271	Ditto ..	4,049 11 8	No ..	2 as. 10 gds. .. Separate account No. 4. All other shares, 13 as. 10 gds., shall be excluded from sale.	Kalmuddin Chaudhury and others.	726 8 4	..	(a) 347 5 0 (b) 77 10 10 425 0 4
273	Mahal Barakristopur (Kistopur Bara), pargana Mohoshow.	3,540 3 10	Yes ..	....	Naresh Chandra Mallick and others.	..	359 3 10	..
278	Mahal Debnathpur, pargana Deora.	3,275 10 0	No ..	7 as. 13 gds. 2 c. residuary share. All other shares, 8 as. 6 gds. 2 c., shall be excluded from sale.	Prafullamayee Debi and others.	1,570 7 1	..	130 7 1

(a) Arrear land revenue payable before 1st Chaitra 1337 B. S. (b) Arrear land revenue payable before 1st Asar 1338 B. S.

Tauzi No.	Name of mahal and pargana.	Sadar jama of whole estate.	Whether the whole estate is to be sold.	If only a share is to be sold, specification of such share or shares.	Names of proprietors of property to be sold.	If only a share is to be sold, the sadar jama of such share.	If the whole estate is to be sold, the arrears due from it.	If only a share is to be sold, the arrears due from it.
1	2	3	4	5	6	7	8	9
		Rs. A. P.				Rs. A. P.	Rs. A. P.	Rs. A. P.
320	Mahal Moliapara, pargana Bihinagar.	4,212 12 0	Yes	....	Sherajuddin Ahmed Chaudhury and others.	..	119 8 11	..
332	Mahal Dharmapur, pargana Salbari.	3,176 1 0	No ..	6 as. 6 gds. 3c. 2¼ job . Separate account No. 1. All other shares, 9 as. 13 gds. 2 kt. 2 dt. ¾ job, shall be excluded from sale.	Madhu Sudan Chaudhury.	1,258 3 0	..	128 1 0
332	Ditto ..	3,176 1 0	No ..	4 as. 8 gds. 3 c. 1 kt. 2 dt. 2¾ job. Separate account No. 2. All other shares, 11 as. 11 gds. 1 kt. ¼ job, shall be excluded from sale.	Ditto ..	882 8 3	..	90 1 7
332	Ditto ..	3,176 1 0	No ..	5 as. 4 gds. 1 c. 2 dt. 1 job. Separate account No. 3. All other shares, 10 as. 15 gds. 2 c. 2kt. 2 job, shall be excluded from sale.	Ditto ..	1,035 5 9	..	104 10 9
336	Mahal Gunshi, pargana Sultanpur.	7,746 10 8	No ..	5 as. 6 gds. 2 c. 2 kt. residuary share. All other shares, 10 as. 13 gds. 1 c. 1 kt., shall be excluded from sale.	Narain Kumar Chaudhury and others.	2,582 3 6	..	268 9 7
345	Mahal Raghabendrapur, pargana Fulbari.	3,079 15 0	No ..	12 as. residuary share. All other shares, 4 as., shall be excluded from sale.	Haripada Ghatak and others.	2,310 0 7	..	239 3 9
350	Mahal Basbhanga, pargana Salbari.	1,419 1 0	Yes ..	....	Chandi Prosad Chaudhury.	..	147 1 0	..
356	Mahal Mahadebpur, pargana Bhulhara.	1,619 11 9	Yes ..	....	Joggeswar Sarker and others.	..	60 10 4	..
358	Mahal Ranipur, pargana Rajnagar.	581 4 0	Yes ..	....	Joynul Haq Chaudhury and others.	..	112 0 0	..
404	Mahal Haragobindapur, pargana Gilahabari.	3,349 7 4	No ..	0 as. 10 gds. 1 kt. 2¼ dt. residuary share. All other shares, 9 as. 9 gds. 3 cr. 1 kt. ¾dt., shall be excluded from sale.	Moslev-uddin Chaudhury and others.	1,362 8 11	..	185 0 2
426	Mahal Gopinathpur, pargana Gilahabari.	1,433 14 7	Yes ..	....	Kumar Sarat Kumar Rai.	..	326 12 4	..
445	Mahal Alihat, pargana Alihat.	1,192 0 0	No ..	8 as. Separate account No. 1. All other shares, 8 as., shall be excluded from sale.	Maharaj Kumar Gopal Lal Rai.	596 0 0	..	29 3 4
458	Mahal Parbatipur, pargana Hasla Bangalipur.	1,625 15 0	Yes ..	....	Nripendra Chandra Chaudhury and others.	..	388 1 11	..
469	Mahal Shyampur, pargana Gilahabari.	1,745 3 6	No	5 as. residuary share. All other shares, 11 as., shall be excluded from sale.	Rahimuddin Chaudhury and others.	545 6 1	..	33 11 0
470	Mahal Ramkristopur, pargana Gilahabari.	1,557 12 3	Yes ..	....	Kumar Sarat Kumar Rai.	..	574 9 11	..
471	Mahal Taherkhali, pargana Rajnagar.	729 15 4	No	12 as. residuary share. All other shares, 4 as., shall be excluded from sale.	Haji Mohammed Samiruddin Chaudhury and others.	547 7 6	..	(a) 21 8 11 (b) 58 7 6 80 0 5
491	Mahal Joypur, pargana Bhulhara.	2,770 11 3	No ..	8 as. 3 gds. 3 c. 1 kt. 1½ dt. residuary share. All other shares, 7 as. 16 gds. 1 kt. 1½ dt., shall be excluded from sale.	Neyamatulla Chaudhury.	1,418 13 1	..	183 11 2
492	Mahal Chandgaon, pargana Bhulhara.	1,258 12 10	Yes ..	....	Madanmohan Chaudhury.	..	166 12 5	..

(a) Arrear land revenue payable before 1st Chaitra 1337 B. S. (b) Arrear land revenue payable before 1st Asar 1338 B. S.

Tauzi No.	Name of mahal and pargana.	Sadar jama of whole estate.	Whether the whole estate is to be sold.	If only a share is to be sold, specification of such share or shares.	Names of proprietors of property to be sold.	If only a share is to be sold, the sadar jama of such share.	If the whole estate is to be sold, the arrears due from it.	If only a share is to be sold, the arrears due from it.
1	2	3	4	5	6	7	8	9
		Rs. A. P.				Rs. A. P.	Rs. A. P.	Rs. A. P.
497	Mahal Anjamkhore, pargana Debatta.	1,075 7 0	Yes ..	....	Janakinath Majumder.	..	110 7 0	..
501	Mahal (jote) Ghanesyampur, pargana Sarhatta.	1,292 6 4	Yes ..	....	Maharaj Bahadur Sing.	..	97 6 4	..
510	Mahal Kumruk, pargana Dhanjore.	2,578 11 11	No ..	8 as. residuary share All other shares, 8 as., shall be excluded from sale.	Brajo Dulal Dhar and others.	1,289 5 11	..	143 5 11
510	Mahal Kumruk, pargana Dhanjore.	2,578 11 11	No ..	8 as. .. Separate account No 1. All other shares, 8 as., shall be excluded from sale.	Sonrindranarain Dhar and others.	1,289 6 0	..	144 5 0
608	Mahal Chandmukh, pargana Debikote.	678 0 0	Yes ..	....	Maharaja Jagadish Nath Rai and others.	..	20 2 0	..
823	Mahal Madhabpur, pargana Bhulhara.	1,296 12 3	Yes ..	....	Nagendranath Chaudhury and others.	..	168 12 3	..
825	Mahal Pustampur, pargana Salbari.	523 9 0	Yes ..	....	Nripendra Chandra Chaudhury and others.	..	56 1 7	..
857	Mahal Rezwanulla, pargana Salbari.	1,804 7 0	Yes ..	....	Maulvi Mahamed Rezwanulla Khan.	..	133 7 0	..
858	Mahal Ujalkota, pargana Salbari.	1,624 0 2	Yes ..	....	Kazi Mahammed Rezluddin Abul Ilias and others.	..	57 9 10	..
860	Mahal Beltara, pargana Sontosh.	1,938 14 1	Yes ..	....	Gosto Behary Kar and others.	..	49 14 10	..
861	Mahal Nazirpur, pargana Sontosh.	969 7 1	No ..	13 as. residuary share All other shares, 3 as., shall be excluded from sale.	Monmohon Pal and others.	787 10 9	..	72 7 1
895	Mahal Kashba (mauza), pargana Kardaha.	1,039 11 4	Yes ..	....	Ram Sital Chakravarty and others.	..	108 11 4	..
912	Mahal Chandrai (Chandai), pargana Bhulhara.	2,424 5 10	Yes ..	....	Mahfuz Ali Chaudhury and others.	..	318 5 10	..
918	Mahal Jagannathpur, pargana Deora.	2,250 11 1	Yes ..	....	Trailokya Tarini Shet, guardian of Jashada Nandan Shet, and others.	..	165 2 10	..
952	Toke Kharikadam, pargana Salbari.	1,157 5 1	Yes ..	....	Chaudhury Mahammed Amin and others.	..	44 8 8	..

Dinajpur, the 22nd August 1931.

L. C. GUHA, Collector.

Notification A.

NOTICE is hereby given, under sections 6 and 13, Act XI of 1859, read with section 11, Act VII (B. C.) of 1868, that the undermentioned estates and shares of estates in the district of Tippera will be put up for sale at the office of the Collector of that district on the 25th September 1931, at 12 noon, for arrears of revenue and other demands which by law are realizable as arrears of land revenue.

When in columns 5, 7 and 9 of the following statement it is stated that only a share is to be sold, it is to be understood that a separate account is kept for that share : —

Tauzi No.	Name of tenure and pargana.	Rent of whole tenure.	Whether the whole tenure is to be sold.	If only a share is to be sold, specification of such share or shares.	Names of tenure-holders of property to be sold.	If only a share is to be sold, the rent of such share.	If the whole tenure is to be sold, the arrears due from it.	If only a share is to be sold, the arrears due from it.
1	2	3	4	5	6	7	8	9
		Rs. A. P.				Rs. A. P.	Rs. A. P.	Rs. A. P.
1938	Joar Krishnanagar (taluk Sitaram Roy), pargana Bardakhat.	9,229 11 0	..	Hissya 5 as 6 g. 2 c. 2 kt., khatian No. 2 of Gournagar, khatian No. 2 of Durgarampur, khatian No. 2 of Thanakandi, khatian No. 2 of Gazirkandi. All other shares than that specified will be excluded from the sale.	Sarada Charan Roy Chaudhury and others.	2,164 12 0	..	Rent— 3,159 4 8 Cess— 941 11 3 For instalment up to 24th May 1931.
1938	Ditto ..	9,229 11 0	..	Hissya 5 as. 6 g. 2 c. 2 kt., khatian No. 3 of Krishnanagar, khatian No. 2 of Uttar Lakhipur, khatian No. 2 of Daulatpur. All other shares than that specified will be excluded from the sale.	Radharani Chaudhurany.	2 884 12 0	..	Rent— 823 8 9 Cess nil. For instalment up to 24th May 1931.
1938	Ditto ..	9,229 11 0	..	Hissya 5 as. 6g. 2 c. 2 kt., khatian No. 2 of Krishnanagar, khatian No. 2 of Sitarampur, khatian No. 2 of Dakhin Lakhipur, khatian No. 2 of Asrafpur. All other shares than that specified will be excluded from the sale.	Monomohan Roy Chaudhury.	3,180 3 0	..	Rent— 1,188 14 2 Cess nil. For instalment up to 24th May 1931.
2686	Mauza Auliikote, taluk Mir Ramjan Ali, pargana Bardakhat.	1,901 13 0	Whole	....	Jobeda Khatoon and others.		Rent— 497 15 0 Cess— 25 15 0 For instalment up to Chaitra 1337 B. S.	..
2687	Bangora Dakhin taluk Durlav Rani Deb pargana Bardakhat.	1,445 3 0	Do. ..	....	Upendra Lochan Mazumdar and others.	..	Rent— 120 6 0 Cess— 7 5 0 For instalment up to Chaitra 1337 B.S.	..
2691	Joar Darora, pargana Bardakhat.	2,871 3 0	..	Meadi Patni taluk Hridoy Rani Das, holding No. 47, khatian No. 354 of Darora, khatian No. 444 of Ranimuri, khatian No. 93 of Patuali, khatian No. 8 of Kemtali. All other shares than that specified will be excluded from the sale.	Amrita Sekhar Das Gupta and others.	855 4 0	..	Rent— 213 13 0 Cess— 12 6 6 For instalment up to 24th May 1931.
2074	Joar Dhanapatikhola, pargana Bardakhat.	3,689 4 0	..	Meadi Patni taluk, hissya 4 as., holding No. 1, khatian No. 6 of Dhanapatikhola. All other shares than that specified will be excluded from the sale.	Prakash Chandra Sarkar and others.	890 9 0	..	Rent— 222 0 0 Cess nil. For instalment up to 24th May 1931.
2714	Joar Moheshpur, pargana Bardakhat.	1,265 6 0	Whole	....	Mukul Baja Das and others.	..	Rent— 272 14 8 Cess— 15 10 2 For instalment up to Poush 1337 B.S.	..
2719	Joar Nasaraddi, hissya 8 as., pargana Bardakhat.	607 0 0	Do. ..	....	Durga Ch. Saha and others.	..	Rent— 151 0 0 Cess— 8 0 0 For instalment of June 1931.	..
2727	Mauza Ram Nagar, pargana Bardakhat.	554 0 0	Do. ..	....	Abul Khair Serajaddi Ahamed and others	..	Rent 177 Cess— 14 10 0 For instalment o February 1931.	..
2731	Joar Singula, pargana Bardakhat.	2,021 15 0	Do. ..	....	Kaminikanta Guha.	..	Rent— 1,010 8 0 Cess— 78 15 0 For instalment up to February 1931.	..

Comilla, the 25th August 1931.

N. C. BOSE, *for* Collector.

Notification A.

NOTICE is hereby given, under sections 6 and 13, Act XI of 1859, that the undermentioned estates and shares of estates in the district of Midnapore will be put up for sale at the office of the Collector of that district on the 26th September 1931, at 12 noon, for arrears of revenue of which the latest date of payment was 29th June 1931, and other demands, which by law are realizable as arrears of land revenue.

When in columns 5, 7 and 9 of the following statement it is stated that only a share is to be sold, it is to be understood that a separate account is kept for that share :—

Tauzi No.	Name of mahal and pargana.	Sadar jama of whole estate.	Whether the whole estate is to be sold.	If only a share is to be sold, specification of such share or shares.	Names of proprietors of property to be sold.	If only a share is to be sold, sadar jama of such share.	If the whole estate is to be sold, the arrears due from it.	If only a share is to be sold, the arrears due from it.
1	2	3	4	5	6	7	8	9
		Rs. A. P.				Rs. A. P.	Rs. A. P.	Rs. A. P.
216	Singural, pargana Boraichore.	1,289 5 11	..	Residuary share— 12 annas in each of mauzas Bhatia, Jagannathchak, Narayanchak, Jagatramchak *alias* Jagatraibarh, Mukundachak *alias* Mukundaharichak, Kasichak *alias* Kasigirichak; 16 annas of mauzas Ichanagari and Kalusanapatichak; 7 annas share in mauzas Kuchai, Lakhanchak and Pakhinagari; and 16 annas of mauza Saraki will be sold. All other shares than that specified will be excluded from sale.	Bamacharan Giri and others.	777 13 5	..	57 1 5
276	Bhitorebinode 4 annas share, pargana Toppabalisita.	1,658 14 10	..	Separate account No. 1— 8 annas share of mahal will be sold. All other shares than that specified will be excluded from sale.	Ratnakar Das ..	829 7 5	..	50 2 5
327	Dihi Baranga *alias* De Baranga, etc., pargana Birkul.	3,195 3 8	..	Residuary share— The following shares of the following mauzas will be sold :— 5 a. 15 gd. of mauza Arjuni, 4 a. 12 gd. 2 c. of mauza Akbarpur, 4 annas of mauza Barabatia, 4 annas of mauza Damodarpur, 7 a. 11 gd. 5 kag 13 gd. 1 c. 1 kt. of mauza Baranga, 2 a. 10 gd. of mauza Barangabheri, 11 a. 5 gd. of mauza Bhagirathpur, 3 a. 5 gd. 2 kag 16 til 1 c. of mauza Chandia, 12 a. 10 gd. of mauza Deulbatta, 16 annas of mauza Fatepur, 10 a. 13 gd. 1c. 1kt. of mauza Gobindapur, 4 annas of mauza Ghulichak, 12 a. 3 c. 10 til of mauza Jharpadima, 11 a. 5 gd. of mauza Kabara, 10 a. 13 gd. 1c. 1kt. of mauza Kulbudhi, 12 a. 10 gd. of mauza Hariharpur, 11 a. 6 gd. 2c. 2kt. of mauza Rania, 4 a. 9 gd. 3c. 3 kag 10 til of mauza Akua, 5 a. 8 gd. 1 c. 1 kt. of mauza Bagmari. All other shares than that specified will be excluded from sale.	Pulin Behary Chaudhury and others.	1,289 8 5	..	107 11 8
374	Bhagabanpur *alias* Barh-Bhagabanpur, pargana Bhuiamutha.	1,010 9 5	..	Separate account No. 1— 8 annas share of each of the mauzas Bartanya, Bartanbarh, Binodechak, Bhagabanpurbarh, Saunla and Jogubarh will be sold. All other shares than that specified will be excluded from sale.	Bisseswar Das, self, brother and guardian of Amrit Lal Das, minor and another.	505 4 9	..	55 0 0

Tauzi No.	Name of mahal and pargana.	Sadar jama of whole estate.	Whether the whole estate is to be sold.	If only a share is to be sold, specification of such share or shares	Names of proprietors of property to be sold.	If only a share is to be sold, the sadar jama of such share.	If the whole estate is to be sold, the arrears due from it.	If only a share is to be sold, the arrears due from it.
1	2	3	4	5	6	7	8	9
		Rs. A. P.				Rs. A. P.	Rs. A. P.	Rs. A. P.
478	Kuldaha, pargana Chandrakona.	10,784 7 2	..	Separate account No. 3— 2 a. 13 gd. 1 c 1 kt. share of the mahal will be sold. All other shares than that specified will be excluded from sale.	Sailaja Nath Roy Chowdhury and others.	1,797 6 6	..	2,640 14 7
970	Kishorechak, pargana Kasijora.	606 5 4	Entire ..	....	Bhupati Charan Jana and another.	..	66 2 0	..
2246	Mohar, pargana Sabang.	1,302 1 0	Do. ..	....	Adyaita Charan Maity and others.	..	584 10 0	..
2338	Soulipur, pargana Sabang.	861 13 4	..	Residuary share— 16 as. share of mauzas Binandachak, Bhatbarh, Kerurbarh, Langalkata, Monoharpur, Monoharpur-Khalpar, Gotgerya, Ghasichak, Kakdahara, Kajichak, Salmara-chhoto, Salmara-bara, Soulipur, Gopalbarh, Sadulyapur, Bhanjapur, Markandachak, Birbhanupur-Paschim Chalukuri, Durgaprosadchak, Gopalchak, Narayanbarh, Pakurachak, Raghunathchak, Saliabheri and 4a 10gd. share of mauzas Kalyanpur and Raipur will be sold. All other shares than that specified will be excluded from sale.	Chintamoni Maity and others.	726 12 9	..	8 13 0
2376	Baragarh, pargana Sahapur.	3,196 12 4 including police.	..	Residuary share— 10 annas share of each of the mauzas Baragarh, Debra-kismat and Ramgerya will be sold. All other shares than that specified will be excluded from sale.	Muchiram Maity and others	1,035 2 4 including police.	..	2 14 8

Midnapore, the 2nd September 1931.

[ILLEGIBLE], *for* Collector.

Notification A.

NOTICE is hereby given, under sections 6 and 13, Act XI of 1859, that the undermentioned estates and shares of estates in the district of 24-Parganas will be put up for sale at the office of the Collector of that district on the 23rd September 1931, at 12 noon, for arrears of revenue and other demands which by law are realizable as arrears of land revenue.

When in columns 5, 7 and 9 of the following statement it is stated that only a share is to be sold, it is to be understood that a separate account is kept for that share :—

Tauzi No.	Name of mahal and pargana.	Sadar jama of whole estate.	Whether the whole estate is to be sold.	If only a share is to be sold, specification of such share or shares.	Names of proprietors of property to be sold	If only a share is to be sold, the sadar jama of such share.	If the whole estate is to be sold, the arrears due from it.	If only a share is to be sold, the arrears due from it.
1	2	3	4	5	6	7	8	9
		Rs. A. P.				Rs. A. P.	Rs. A. P.	Rs. A. P.
6 R S.	Mahal Raynagore, pargana Magura.	..	..	16 annas share in all mauzas except in mauzas Pulpara and Jafarpore.	Akhay Chandra Bose.	6,809 3 6	..	1,053 2 4½
36	Mahal Dhapamanpore, pargana Calcutta.	731 12 0	Whole ..	....	Joy Narayan Chandra and others.	..	28 1 2	..
63 R S.	Mahal Bansdroni, pargana Magura.	..	..	9as. 13 gds 4 kag 10 til share of the entire estate.	Satyendra Kumar Sirkar and others.	5,474 15 7	..	266 4 5½
63-1	Ditto ..	..	..	6as. 6gds. 11 kag 10 til 8 are.	Ditto ..	3,588 8 5	..	175 6 4½
107 R. S.	Mahal Akulshi, pargana Magura	..	..	16 annas share of the entire estate except mauzas Nona and Babanpore.	Abhoy Kumar Ray Choudhury.	622 0 8	..	70 15 1
146 R S.	Mahal Jajra, pargana Anarpore.	..	..	16 annas share of 185 mauzas of the entire estate.	Dharani Mohan Ray	20,207 1 9	..	1,088 13 4½
166	Mahal Rajarampore, pargana Hatiaghar	500 10 4	Whole ..	....	Satyendra Kumar Sircar and others.	..	43 14 3½	..
273 R. S.	Mahal Dudlal, pargana Medanmolla.	..	..	8 annas share of the entire estate.	Amolic Nath Dutta and others.	510 9 5½	..	58 5 1½
281	Mahal Kandarpapur, pargana Medanmolla.	593 10 4	Whole ..	....	Banbehari Chatterjee and others	..	252 4 10	.
411	Mahal Dhanyakhola, pargana Magura.	2,503 4 0	Do. ..	....	Gopal Lal Banerji and others.	..	110 10 0	..
603-6	Mahal Balia, pargana Balia	..	..	....	Sailajanath Ray Chaudhury and others	..	1,631 12 4	..
1064-1	Mahal Kharbil Nalua, pargana Hatiaghar.	..	..	5 as. 6 gds. 2 k 2 kr. share of the entire estate.	Dhirendradeb Ray and others.	1,088 3 3	..	128 15 9
1503-1	Mahal Hasanpore, pargana Hatiaghar	..	..	5 as 6 g. 2 k. 2 kr. share of the entire estate.	Ditto ..	2,380 3 5	..	369 5 3
1829	Lot No. 65, pargana Sunderbans	6,191 0 0	Whole ..	....	Port Canning and Land Improvement Co., Ltd	..	773 13 3	..
1386-2	Lot No. 74, pargana Sunderbans.	..	..	2 as. 16 g. 1 k. 1⅓ danti ..	Peary Lal Ghosh and others.	552 1 0	..	34 8 0
1387-2	Lot No. 76, pargana Sunderbans.	..	..	2 as. 16 g. 1 k. 1⅓ danti ..	Ditto ..	739 1 1	..	46 3 0
1457 R. S.	Lot No. 90, pargana Sunderbans.	..	..	11 as. 12 gds. 10 kag 19⅓ til share of the entire estate.	Bepin Behary Sarkar and others.	6,105 2 0	..	383 14 0
2687	Lot No. 11, eastern part, pargana Sunderbans.	3,579 0 0	Whole ..	....	Ram Gopal Das Naskar and others.	..	2,573 0 0	..
2688	Lot No. 11, middle part, pargana Sunderbans.	4,792 0 0	Do. ..	....	Ditto ..	..	3,545 0 0	..
2712	Lot No. 67, south-eastern part, pargana Sunderbans.	4,586 0 0	Do. ..	....	Ananta Deb Sirkar and others.	..	287 0 0	..
2714	Lot No. 11, western part, pargana Sunderbans.	4,420 0 0	Do. ..	....	Ram Gopal Das Naskar and others.	..	3,236 0 0	..
2721-1	Lot No. 16, north-western part, pargana Sunderbans.	..	..	8 annas share of the entire estate.	Annada Prosad Mitra.	2,339 8 0	..	146 0 0

Tauzi No.	Name of mahal and pargana.	Sadar jama of whole estate.	Whether the whole estate is to be sold.	If only a share is to be sold, specification of such share or shares.	Names of proprietors of property to be sold.	If only a share is to be sold, the sadar jama of such share.	If the whole estate is to be sold, the arrears due from it.	If only a share is to be sold, the arrears due from it.
1	2	3	4	5	6	7	8	9
		Rs. A. P.				Rs. A. P.	Rs. A. P.	Rs. A. P.
2731	Lot No. 138, western part, pargana Sunderbans.	5,954 0 0	Whole ..	....	Sunil Kumar Ray Chaudhury.	..	3,726 0 0	..
2823	1st portion of lot No. 111, pargana Sunderbans.	5,241 0 0	Do. ..	....	Pran Krishna Samanta and others.	..	1,965 0 0	..
2853	Lot No 128, 1st portion pargana Sunderbans.	1,125 0 0	Do. ..	....	Dwarika Nath Chakravarty.	..	210 0 0	..
2895	I plot, 9th portion, pargana Sunderbans.	810 0 0	Do. ..	....	Sm. Nistarini Dasi and others.	..	404 15 0	..
2898	I plot, 1st portion, pargana Sunderbans.	979 0 0	Do. ..	....	Ram Gopal Das Nasker.	..	98 0 0	..
2906	Lot No. 122, 2nd portion, pargana Sunderbans.	783 0 0	Do. ..	....	Chandi Charan Laha.	..	157 0 0	..
2923	Lot No. 127, pargana Sunderbans.	3,987 0 0	Do. ..	....	Nafar Chandra Pal Chaudhury.	..	2,342 0 0	..
2924	Lot No. 128, south portion, pargana Sunderbans.	4,576 0 0	Do. ..	....	Ditto ..	..	2,288 0 0	..
2925	E plot, 1st portion, pargana Sunderbans.	1,094 0 0	Do. ..	....	Bhupendra Nath Jana and others.	..	219 0 0	..
2927 R.S.	F plot, 2nd portion, pargana Sunderbans.	..	..	8 annas share of the entire estate.	Satish Chandra Dinda and others.	529 0 0	..	100 0 0
2977	Lot No. 117, 2nd portion, pargana Sunderbans.	943 0 0	Whole ..	....	Chandi Charan Laha.	..	188 0 0	..
2981	Lot No. 139, 4th portion, pargana Sunderbans.	1,105 0 0	Do. ..	....	Hrishikesh Mitra	..	221 0 0	..
2987	Lot No. 150, 1st portion, pargana Sunderbans.	939 0 0	Do. ..	....	Krishna Prasad Ghosh and others.	..	188 0 0	..
2991	Lot No. 150, 3rd portion, pargana Sunderbans.	1,166 0 0	Do. ..	....	Dhirendra Nath Dey.	..	233 0 0	..
2993	Lot No. 162, 1st portion, pargana Sunderbans.	1,285 0 0	Do ..	....	Manindra Nath Bhaduri.	..	885 0 0	..
3014	Lot No. 150, 2nd portion, pargana Sunderbans.	1,040 0 0	Do. ..	....	Sm. Susila Sundari Bose.	..	208 0 0	..
3017	Lot No. 162, 2nd portion, pargana Sunderbans.	1,143 0 0	Do. ..	....	Bhaba Nath Chakraverty and others.	..	19 12 0	..
3162	Mahal Ramchandrapore, pargana Balia.	1,440 0 0	Do. ..	....	Chandi Charan Laha and others.	..	1,193 0 0	..

Alipore, the 5th September 1931.

P. GHOSE, *for* Collector.

Notification A.

NOTICE is hereby given, under sections 6 and 13, Act XI of 1859, that the undermentioned estates and shares of estates in the district of Khulna will be put up for sale at the office of the Collector of that district on the 24th September 1931, at 12 noon, for arrears of revenue and other demands which by law are realizable as arrears of land revenue :—

Touzi No.	Name of mahal and pargana.	Sadar jama of whole estate.	Whether the whole estate is to be sold.	If only a share is to be sold, specification of such share or shares.	Names of proprietors of property to be sold.	If only a share is to be sold, the sadar jama of such share.	If the whole estate is to be sold, the arrears due from it.	If only a share is to be sold, the arrears due from it.
1	2	3	4	5	6	7	8	9
		Rs. A. P.				Rs. A. P.	Rs. A. P.	Rs. A. P.
77	Dhuliapur, pargana Dhuliapur.	..	..	11 annas share* .. Separate account No. 2.	Golap Sundari Devi and others.	12,016 11 5½	..	2,629 3 11
108	Babulia, pargana Buran.	..	..	8 annas share* .. Separate account No. 1.	Sailaja Nath Rai Choudhury and others.	789 5 8	..	292 11 10
132	Sailaja Nath, pargana Buran.	..	..	8 annas share* .. Separate account No. 2.	Ditto ..	3,138 14 4	..	1,460 12 10
130	Girija Nath, pargana Molol.	..	..	8 annas share* .. Separate account No. 1.	Jatindra Nath Rai Choudhury and others.	3,589 2 1	..	1,387 4 10
181	Sarparajpur, pargana Sarparajpur.	647 9 4	Whole	..	Kusum Kumari Mitra.	..	367 8 2	..
949	Haria, pargana Sundarbans.	5,559 0 0	Do. ..	..	Quazi Abdur Rouf and others.	..	173 11 6	..
957	Bazitpur, pargana Bazitpur.	..	..	6 annas share* .. Separate account No. 1.	Hemendra Nath Rai Choudhury and others.	6,554 10 3	..	2,334 10 3
967	Hogla, pargana Hogla.	..	..	3 annas and 4 gandas share*. Separate account No. 3.	Gopal Hari Ghose Choudhury.	1,863 10 4	..	310 1 11
1027	Char pania, pargana Bazitpur	574 0 0	Whole	..	Hari Mohon Ghose and others.	..	36 0 0	..
1077	Mati Lal, pargana Molol.	2,297 3 9½	Do.	..	Murari Mohon Mallik and others.	..	999 9 7	..
1080	Dwijendra, pargana Molol.	4,307 5 1	Do. ..	..	Hemendra Nath Rai Choudhury and others.	..	1,344 3 0	..
1104	Dwijendra Nath, pargana Buran.	3,766 10 10	Do. ..	..	Ditto ..	..	1,344 14 8	..

*All other shares than those specified will be excluded from sale.

Khulna, the 24th August 1931.

E. W. HOLLAND, Collector.

Notice.

PURSUANT to the orders of Government, dated the 29th June 1881, particulars of the undernoted articles, held by the Calcutta Port Commissioners as Receivers of Wrecks, each article being of value exceeding Rs. 100, are published for general information in accordance with the provisions of section 276 of Act XXI of 1923 :—

No. and date in Recovery Register.			Description of article.	Approximate value.	Where and when recovered.	Where lying.
				Rs.		
August 1931 ..	20th ..	3 P.	34 logs (Jarool wood) of various sizes and marks.	2,000	Recovered from the river off Shalimar between the 29th May and 10th July 1931.	Lying on the foreshore at Tuckta Ghat.

C. V. L. NORCOCK, Deputy Conservator.

Port Commissioners' Office, Calcutta, the 20th August 1931.

(1784—3)

In the Court of the District Judge of Hooghly.

MISCELLANEOUS CASE No. 43 OF 1931.

Meerza Reza Hossain of Chinsura, petitioner.

IT is hereby notified for general information that the above petitioner has applied for being appointed Matwalli of the Wakf created by the late Meerza Mahammad Momen for the maintenance of an Imambarah at Meerzapur, Chinsura, and that the 11th day of September 1931 has been fixed for hearing of the said petition. Anyone willing to object to the said appointment must do so on or before that day.

S. SEN, District Judge.

Chinsura, the 21st May 1931. (1158—1—1872)

In the High Court of Judicature at Fort William in Bengal, in Insolvency.

NOTICE OF ADJUDICATION ORDER.

No. 178 OF 1930.

Re Goonamull Purusram, a firm of traders lately carrying on business at No. 7, Lindsay Street, in the town of Calcutta, and also carrying on business at Rangoon in Burma. *Ex parte* the creditor.

Raj Kumar Basu, creditor's solicitor.

ON the 18th day of March 1931, an order was made by the High Court of Judicature at Fort William in Bengal in its insolvency jurisdiction adjudging the abovenamed firm as an insolvent.

NOTE.—All debts due to the estate should be paid to me.

Dated this 29th day of August 1931.

G. M. FALKNER, Official Assignee.

In the High Court of Judicature at Fort William in Bengal, in Insolvency.

NOTICE OF ADJUDICATION ORDER.

No. 188 OF 1931.

Re Nund Kissore Poddar, residing and lately carrying on business as an under-broker at No. 14, Upper Chitpore Road, in the town of Calcutta. *Ex parte* the creditor.

Kanti Chandra Mukherjee, creditor's solicitor.

ON the 12th day of August 1931, an order was made by the High Court of Judicature at Fort William in Bengal in its insolvency jurisdiction adjudging the abovenamed as an insolvent.

NOTE.—All debts due to the estate should be paid to me.

Dated this 29th day of August 1931.

G. M. FALKNER, Official Assignee.

In the High Court of Judicature at Fort William in Bengal, in Insolvency.

NOTICE OF ADJUDICATION ORDER.

No. 213 OF 1931.

Re Joseph Phillip Vida, residing at No. 5, Blockman Street, in the town of Calcutta, an Engineering Supervisor in the Government Central Telegraph Office, Calcutta, *ex parte* the debtor in person.

ON the 25th day of August 1931, an order was made by the High Court of Judicature at Fort William in Bengal in its insolvency jurisdiction adjudging the abovenamed as an insolvent.

NOTE.—All debts due to the estate should be paid to me.

Dated this 2nd day of September 1931.

G. M. FALKNER, Official Assignee.

In the High Court of Judicature at Fort William in Bengal, in Insolvency.

NOTICE OF ADJUDICATION ORDER.

No. 214 OF 1931.

Re Joseph Paul, residing at No. 2, Prinsep Lane, suite No. 7, in the town of Calcutta, a telegraphist in the Central Telegraph Office, Calcutta, *ex parte* the debtor in person.

ON the 27th day of August 1931, an order was made by the High Court of Judicature at Fort William in Bengal in its insolvency jurisdiction adjudging the abovenamed as an insolvent.

NOTE.—All debts due to the estate should be paid to me.

Dated this 31st day of August 1931.

G. M. FALKNER, Official Assignee.

In the Court of the District Judge of Dacca.

INSOLVENCY CASE No. 28 OF 1931.

Abdul Rezak Mia, petitioner.

WHEREAS Abdul Rezak Mia, son of late Abdul Gafur, resident of Basailbhog, police-station Sreenagar, district Dacca, has applied to this Court for being adjudged an insolvent, the 22nd September 1931 next has been fixed for the hearing of the aforesaid petition, and for examination of the petitioner and the creditors.

A. G. R. HENDERSON, District Judge.

Dacca, the 28th August 1931. (1829—1)

In the Court of the District Judge of Dacca.

INSOLVENCY CASE No. 34 OF 1931.

Chinta Haran Ghosh, petitioner.

WHEREAS Chinta Haran Ghosh, son of late Kali Prosad Ghosh, resident of Brahmangaon, police-station Lohajang, district Dacca, residing at present at 50, Kagjitola, police-station Sutrapur, district Dacca, has applied to this Court for being adjudged an insolvent, the 15th September 1931 next has been fixed for the hearing of the aforesaid petition and for examination of the petitioner and the creditors.

A. G. R. HENDERSON, District Judge.

Dacca, the 28th August 1931. (1830—1)

In the Court of the District Judge of Dinajpur.

INSOLVENCY CASE No. 60 OF 1931.

ASARAM SARERA of Rajganj, police-station Kotwali, district Dinajpur, creditor, has applied to this Court that his debtors (1) Kheliram Tashniala, son of late Rup Chand Tashniala, (2) Ramkumar Tashniala, (3) Radhakishen Tashniala and (4) Balchand Tashniala, sons of late Balmukund Tashniala, all proprietors of the Kheliram Balmukund Firm of Kaharole Hat, police-station Kaharole, district Dinajpur, be declared insolvents.

The 18th September 1931 has been fixed for hearing of the case.

J. N. MUKHARJI, *for* District Judge.

Dinajpur, the 3rd September 1931. (1847—1)

NOTICE TO DEBTORS OF THE DATE OF HEARING OF AN INSOLVENCY PETITION.

Section 19 of the Provincial Insolvency Act, V of 1920.

In the Court of the District Judge at Chittagong.

INSOLVENCY APPLICATION No. 28 OF 1931.

WHEREAS (1) Firm Ram Kumar Ramdhan Choudhury, carrying on business in Teribazar, Chittagong, (2) Firm Nabin Chandra Mahajan, carrying on business at Khatunganj, Chittagong, have applied to this Court by a petition, dated 20th day of July 1931, to have Dinabondu Pal, son of Ruhidas Pal, of Putibila, police-station Maheshkhali, Chittagong declared an insolvent under the Provincial Insolvency Act, V of 1920, this is to give notice to the above debtor and all concerned that the Court has fixed the 30th day of September 1931 for the hearing of the aforesaid petition and the examination of the petitioners. If they desire to be represented in the matter they should attend in person or by duly instructed pleader.

J. YOUNIE, District Judge.

Chittagong, the 25th August 1931. (1802—1—1877)

NOTICE TO DEBTORS OF THE DATE OF HEARING OF AN INSOLVENCY PETITION.

Section 19 of the Provincial Insolvency Act, V of 1920.

In the Court of the District Judge at Chittagong.

INSOLVENCY APPLICATION No. 29 OF 1931.

WHEREAS (1) Firm Ram Kumar Ramdhan Choudhury, carrying on business in Teribazar, Chittagong, (2) Firm Nabin Chandra Mahajan, carrying on business at Khatunganj, Chittagong, have applied to this Court by a petition, dated 20th day of July 1931, to have Prafulla Sankar Pal, son of Jagobondhu Pal of Putibila, police-station Maheshkhali, Chittagong, declared an insolvent under the Provincial Insolvency Act, V of 1920, this is to give notice to the said debtor and all concerned that the Court has fixed the 30th day of September 1931 for the hearing of the aforesaid petition and the examination of the petitioners. If they desire to be represented in the matter they should attend in person or by duly instructed pleader.

J. YOUNIE, District Judge.

Chittagong, the 25th August 1931. (1803—1—1878)

NOTICE TO DEBTORS OF THE DATE OF HEARING OF AN INSOLVENCY PETITION.

Section 19 of the Provincial Insolvency Act, V of 1920.

In the Court of the District Judge at Chittagong.

INSOLVENCY APPLICATION No. 30 OF 1931.

WHEREAS Firm Ram Kumar Ramdhan Choudhury, carrying on business at Teribazar, Chittagong, have applied to this Court by a petition, dated 20th day of July 1931, to have Nagendra Chandra Pal, son of Ram Sundar Pal, of Putibila, police-station Maheshkhali, Chittagong, declared an insolvent under the Provincial Insolvency Act, V of 1920, this is to give notice to the said debtor and all concerned that the Court has fixed the 30th day of September 1931 for the hearing of the aforesaid petition and the examination of the petitioners. If they desire to be represented in the matter they should attend in person or by duly instructed pleader.

J. YOUNIE, District Judge.

Chittagong, the 25th August 1931. (1804—1—1879)

NOTICE TO DEBTORS OF THE DATE OF HEARING OF AN INSOLVENCY PETITION.

Section 19 of the Provincial Insolvency Act, V of 1920.

In the Court of the District Judge at Chittagong.

INSOLVENCY APPLICATION No. 31 OF 1931.

WHEREAS Firm Ram Kumar Ramdhan Choudhury, carrying on business at Teribazar, Chittagong, have applied to this Court by a petition, dated 20th day of July 1931, to have Surendra Bijoy Pal, son of Ram Sundar Pal, of Putibila, police-station Maheshkhali, Chittagong, declared an insolvent under the Provincial Insolvency Act, V of 1920, this is to give notice to the said debtor and all concerned that the Court has fixed the 30th day of September 1931 for the hearing of the aforesaid petition and the examination of the petitioners. If they desire to be represented in the matter they should attend in person or by duly instructed pleader.

J. YOUNIE, District Judge.

Chittagong, the 25th August 1931. (1805—1—1880)

NOTICE TO DEBTORS OF THE DATE OF HEARING OF AN INSOLVENCY PETITION.

Section 19 of the Provincial Insolvency Act, V of 1920.

In the Court of the District Judge at Chittagong.

INSOLVENCY APPLICATION No. 32 OF 1931.

WHEREAS Firm Ram Kumar Ramdhan Choudhury, carrying on business at Teribazar, Chittagong, have applied to this Court by a petition, dated 20th day of July 1931, to have Mahendra Bijoy Pal, son of Ram Sundar Pal, of Putibila, police-station Maheshkhali, Chittagong, declared an insolvent under the Provincial Insolvency Act, V of 1920, this is to give notice to the said debtor and all concerned that the Court has fixed the 30th day of September 1931 for the hearing of the aforesaid petition and the examination of the petitioners. If they desire to be represented in the matter they should attend in person or by duly instructed pleader.

J. YOUNIE, District Judge.

Chittagong, the 25th August 1931. (1806—1—1881)

In the Court of the District Judge of Hooghly.

NOTICE is hereby given, under clause (2) of section 12 of the Provincial Insolvency Act, V of 1920, to his creditors that the insolvency petition of Ram Gobinda Sha, son of late Bipat Sha, of Rishra, thana Serampore, district Hooghly, has been admitted by this Court as No. 54 of 1931, and that the 26th September 1931 has been fixed for the hearing thereof.

S. SEN, District Judge.

Chinsura, the 25th August 1931. (1822—1—1874)

In the Court of the District Judge of Hooghly.

NOTICE is hereby given, under clause (2) of section 12 of the Provincial Insolvency Act, V of 1920, to his creditors that the insolvency petition of Chittu Mia, son of late Jumman Mia, at present of Champdani, thana Bhadreswar, district Hooghly, has been admitted by this Court as No. 50 of 1931, and that the 28th September 1931 has been fixed for the hearing thereof.

S. SEN, District Judge.

Chinsura, the 26th August 1931. (1823—1—1875)

In the Court of the District Judge of Hooghly.

NOTICE is hereby given, under clause (2) of section 12 of the Provincial Insolvency Act, V of 1920, to his creditors that the insolvency petition of Sabdar Ali Mallick, son of late Jamui Mallick, of Kumirmara, thana Chanditola, district Hooghly, has been admitted by this Court as No. 56 of 1931 and that the 28th September 1931 has been fixed for the hearing thereof.

S. SEN, District Judge.

Chinsura, the 28th August 1931. (1843—1—1876)

ORDER ANNULLING ADJUDICATION.

Section 43 of the Provincial Insolvency Act, V of 1920.

In the Court of the District Judge of Pabna and Bogra.

INSOLVENCY CASE No. 22 OF 1928.

Re Kudrat Ulla Sardar, son of late Kadam Sardar, of Maliknagar, police-station Sara and district Pabna, insolvent.

COURT'S order for applying for discharge within the period specified having not been complied with, the order of adjudication made on 2nd July 1930 is hereby annulled.

K. C. CHUNDER, District Judge.

Pabna, the 1st September 1931.

In the 4th Court of the Sub-Judge of 24-Parganas.

INSOLVENCY CASE No. 312 OF 1931.

Narendranath Sen of 34, Lansdowne Road, police-station Ballygunge, 24-Parganas, applicant.

To Bijendra Kumar Dutt of 3, Valmuk Street, Lansdowne Road post-office, Calcutta, and others, creditors.

ON the 17th day of August 1931 it was ordered that the matter of the petition of the applicant be heard on the 21st day of September 1931 and that the said applicant do attend to be examined by this Court on that date.

S. N. ROY, Sub-Judge.

Alipore, the 18th August 1931. (1764—1—1836)

In the 4th Court of the Sub-Judge of 24-Parganas.

INSOLVENCY CASE No. 315 OF 1931.

Sivalak Bajpai of Sudder Bazar, Barrackpore, 24-Parganas, applicant.

To Jumman Khan Kabuli, of 24, Tangra Road, 24-Parganas, and another, creditors.

ON the 15th day of August 1931 it was ordered that the matter of the petition of the applicant be heard on the 21st day of September 1931 and that the said applicant do attend to be examined by this Court on that date.

S. N. ROY, Sub-Judge.

Alipore, the 18th August 1931. (1765—1—1837)

In the 4th Court of the Sub-Judge of 24-Parganas.

INSOLVENCY CASE No. 317 OF 1931.

Srinibas Doari *alias* Srinibas Mistry, of Titagarh, 24-Parganas, applicant.

To Firm Lal Khan Esaf Khan, of Titagarh, 24-Parganas, and others, creditors.

ON the 15th day of August 1931 it was ordered that the matter of the petition of the applicant be heard on the 21st day of September 1931 and that the said applicant do attend to be examined by this Court on that date.

S. N. ROY, Sub-Judge.

Alipore, the 18th August 1931. (1766—1—1838)

In the 4th Court of the Sub-Judge of 24-Parganas.

INSOLVENCY CASE No. 320 OF 1931.

Janaki Nath Dey and Bepin Chandra Dey of 134, Raja Rajendra Lal Mitra Road, Beliaghata, 24-Parganas, applicants.

To Tarini Charan Sircar of 57, Clive Street, Calcutta, and others, creditors.

ON the 15th day of August 1931 it was ordered that the matter of the petition of the applicants be heard on the 21st day of September 1931 and that the said applicants do attend to be examined by this Court on that date.

S. N. ROY, Sub-Judge.

Alipore, the 17th August 1931. (1767—1—1839)

In the 4th Court of the Sub-Judge of 24-Parganas.

INSOLVENCY CASE No. 321 OF 1931.

Heramba Kumar Chakrabarty, of Dhakuria Babur Bagan, 24-Parganas, applicant.

To Gagan Chandra Ghosh of 1/1/1, Nilmony Dutta Lane, Calcutta, and another, creditors.

ON the 12th day of August 1931, it was ordered that the matter of the petition of the applicant be heard on the 21st day of September 1931 and that the said applicant do attend to be examined by this Court on that date.

S. N. ROY, Sub-Judge.

Alipore, the 15th August 1931. (1768—1—1840)

In the 4th Court of the Sub-Judge of 24-Parganas.

INSOLVENCY CASE No. 322 OF 1931.

Ghurao Meah of Jagaddal, 24-Parganas, applicant.

To Chunlao Khan Kabuly of Kankinara, 24-Parganas, and others, creditors.

ON the 13th day of August 1931, it was ordered that the matter of the petition of the applicant be heard on the 21st day of September 1931 and that the said applicant do attend to be examined by this Court on that date.

S. N. ROY, Sub-Judge.

Alipore, the 15th August 1931. (1769—1—1841)

In the 4th Court of the Sub-Judge of 24-Parganas.

INSOLVENCY CASE No. 323 OF 1931.

Rabbani Khan of Alamnagore, Budge-Budge, 24-Parganas, applicant.

To Matur Sing Durwan of Chorel, Budge-Budge, 24-Parganas, and others, creditors.

ON the 14th day of August 1931, it was ordered that the matter of the petition of the applicant be heard on the 21st day of September 1931 and that the said applicant do attend to be examined by this Court on that date.

S. N. ROY, Sub-Judge.

Alipore, the 15th August 1931. (1770—1—1842)

In the 4th Court of the Sub-Judge of 24-Parganas.

INSOLVENCY CASE No. 324 OF 1931.

Nagendra Nath Karmakar of 10/6, Rani Sankari Lane, Bhowanipore, 24-Parganas, applicant.

To Gagan Chandra Ghosh of 1/1/1, Nilmony Dutta Lane, Calcutta, and another, creditors.

ON the 12th day of August 1931, it was ordered that the matter of the petition of the applicant be heard on the 21st day of September 1931 and that the said applicant do attend to be examined by this Court on that date.

S. N. ROY, Sub-Judge.

Alipore, the 15th August 1931. (1771—1—1843)

In the 4th Court of the Sub-Judge of 24-Parganas.

INSOLVENCY CASE No. 327 OF 1931.

Gopal Lal Shaw of Tollygunge, Nekaripara, 24-Parganas, applicant.

To Hangsa Lal Roy of Tollygunge 24-Parganas, and others, creditors.

ON the 17th day of August 1931, it was ordered that the matter of the petition of the applicant be heard on the 21st day of September 1931 and that the said applicant do attend to be examined by this Court on that date.

S. N. ROY, Sub-Judge.

Alipore, the 18th August 1931. (1772—1—1844)

ORDER ANNULLING ADJUDICATION.

Section 43 of the Provincial Insolvency Act, V of 1920.

In the 4th Court of the Sub-Judge at Alipore.

INSOLVENCY APPLICATION No. 366 OF 1929.

Lalit Mohan Das, applicant.

WHEREAS Lalit Mohan Das of Nag's Bazar, Dum-Dum, 24 Parganas, does not appear on the date fixed for hearing of his discharge, it is ordered that the order of adjudication, dated 28th January 1930, against the debtor be and the same is hereby annulled.

Dated this 4th day of May 1931.

S. N. ROY, Sub-Judge.

(1773—1—1845)

ORDER ANNULLING ADJUDICATION.

Section 43 of the Provincial Insolvency Act, V of 1920.

In the 4th Court of the Sub-Judge at Alipore.

INSOLVENCY APPLICATION No. 363 OF 1930.

Satish Chandra Ghosh, applicant.

WHEREAS Satish Chandra Ghosh of 5, Hathibagan Road, Entally, 24-Parganas, debtor, does neither appear nor apply for his discharge within the specified time fixed for hearing, it is ordered that the order of adjudication, dated 27th January 1931, against the debtor be and the same is hereby annulled.

Dated this 7th day of August 1931.

S. N. ROY, Sub-Judge.

(1774—1—1846)

ORDER ANNULLING ADJUDICATION.

Section 43 of the Provincial Insolvency Act, V of 1920.

In the 4th Court of the Sub-Judge at Alipore.

INSOLVENCY APPLICATION No. 378 OF 1930.

Surendra Nath Pandit, applicant.

WHEREAS Surendra Nath Pandit of 62, Sambhu Nath Pandit Street, Bhowanipore, 24-Parganas, debtor, does neither appear nor apply for his discharge within the specified time fixed for hearing, it is ordered that the order of adjudication, dated 27th January 1931, against the debtor be and the same is hereby annulled.

Dated this 7th day of August 1931.

S. N. ROY, Sub-Judge.

(1775—1—1847)

NOTICE TO CREDITORS OF APPLICATION FOR DISCHARGE.

Section 41 (*1*) of the Provincial Insolvency Act, V of 1920.

In the 4th Court of the Sub-Judge at Alipore.

INSOLVENCY CASE No. 379 OF 1930

Chattu Bansfore of Dangapara, Kanchrapara, 24-Parganas, applicant.

TAKE notice that the abovenamed insolvent has applied at the Court for his discharge, and that the Court has fixed the 28th day of September 1931, at 11 o'clock, for hearing the application.

Dated this 20th day of August 1931.

S. N. ROY, Sub-Judge.

(1776—1—1848)

NOTICE TO CREDITORS OF APPLICATION FOR DISCHARGE.

Section 41 (*1*) of the Provincial Insolvency Act, V of 1920.

In the 4th Court of the Sub-Judge at Alipore.

INSOLVENCY CASE No. 415 OF 1930.

Basanta Kumar Das, of Shahpore, police-station Behala, 24-Parganas, applicant.

TAKE notice that the abovenamed insolvent has applied at the Court for his discharge, and that the Court has fixed the 28th day of September 1931, at 11 o'clock, for hearing the application.

Dated this 18th day of August 1931.

S. N. ROY, Sub-Judge.

(1777—1—1849)

ORDER OF ADJUDICATION.

Section 27 of the Provincial Insolvency Act, V of 1920.

In the 4th Court of the Sub-Judge at Alipore.

INSOLVENCY APPLICATION No. 99 OF 1931.

PURSUANT to a petition, dated 7th March 1931, filed by Hafiz Ali Khan of Khardah, police-station Khardah, district 24-Parganas, debtor, and on the application of the debtor himself and on reading his petition and hearing his pleader, it is ordered that the debtor be and the said debtor is hereby adjudged insolvent.

It is further ordered that the debtor do apply for his discharge within six months from this date.

Dated this 18th day of August 1931.

S. N. ROY, Sub-Judge.

(1778—1—1850)

ORDER OF ADJUDICATION.

Section 27 of the Provincial Insolvency Act, V of 1920.

In the 4th Court of the Sub-Judge at Alipore.

INSOLVENCY APPLICATION No. 132 OF 1931.

PURSUANT to a petition, dated 7th April 1931, filed by Shaikh Elahi Bux of 3-53, Narikeldanga Main Road, police-station Beliaghata, 24-Parganas, debtor, and on the application of the debtor himself and on reading his petition and hearing his pleader, it is ordered that the debtor be and the said debtor is hereby adjudged insolvent.

It is further ordered that the debtor do apply for his discharge within six months from this date.

Dated this 18th day of August 1931.

S. N. ROY, Sub-Judge.

(1779—1—1851)

ORDER OF ADJUDICATION.

Section 27 of the Provincial Insolvency Act, V of 1920.

In the 4th Court of the Sub-Judge at Alipore.

INSOLVENCY APPLICATION No. 157 OF 1931.

PURSUANT to a petition, dated 21st April 1931, filed by Shaikh Abdul Gani of Ghansbagan, police-station Ballygunge, district 24-Parganas, debtor, and on the application of the debtor himself and on reading his petition and hearing his pleader, it is ordered that the debtor be and the said debtor is hereby adjudged insolvent.

It is further ordered that the debtor do apply for his discharge within six months from this date.

Dated this 18th day of August 1931.

S. N. ROY, Sub-Judge.

(1780—1)

ORDER OF ADJUDICATION.

Section 27 of the Provincial Insolvency Act, V of 1920.

In the 4th Court of the Sub-Judge at Alipore.

INSOLVENCY APPLICATION No. 206 OF 1931.

PURSUANT to a petition, dated 22nd May 1931, filed by A. R. Stuart working as driver, E. B. Railway, debtor, and on the application of the debtor himself and on reading his petition and hearing his pleader, it is ordered that the debtor be and the said debtor is hereby adjudged insolvent.

It is further ordered that the debtor do apply for his discharge within six months from this date.

Dated this 18th day of August 1931.

S. N. ROY, Sub-Judge.

(1781—1—1853)

ORDER OF ADJUDICATION.

Section 27 of the Provincial Insolvency Act, V of 1920.

In the 4th Court of the Sub-Judge at Alipore.

INSOLVENCY APPLICATION No. 220 OF 1931.

PURSUANT to a petition, dated 21st March 1931, filed by Abdul Jabbar of Baga Nawpara, Budge-Budge, 24-Parganas, debtor, and on the application of the debtor himself and on reading his application and hearing his pleader, it is ordered that the debtor be and the said debtor is hereby adjudged insolvent.

It is further ordered that the debtor do apply for his discharge within six months from this date.

Dated this 18th day of August 1931.

S. N. ROY, Sub-Judge.

(1782—1—1854)

ORDER OF ADJUDICATION.

Section 27 of the Provincial Insolvency Act, V of 1920.

In the 4th Court of the Sub-Judge at Alipore.

INSOLVENCY APPLICATION No. 257 OF 1931.

PURSUANT to a petition, dated 22nd June 1931, filed by Abdul Gafur of 40, Watgunge Street, police-station Watgunge, district 24-Parganas, debtor, and on the application of the debtor himself and on reading his petition and hearing his pleader, it is ordered that the debtor be and the said debtor is hereby adjudged insolvent.

It is further ordered that the debtor do apply for his discharge within six months from this date.

Dated this 18th day of August 1931.

S. N. ROY, Sub-Judge.

(1783—1—1855)

In the Court of the District Judge of 24-Parganas.

INSOLVENCY CASE No. 42 of 1931.

Firm Makhanlal Surojmull of 27, Khengraputty, Barra-bazar, Calcutta, creditor, applicant.

To Mohadeb Sarap and Jagadish Sarap, carrying on business under the name and style Nepsidas Mohadeb, at 31-1, Mudiali Road, Tollygunge, 24-Parganas, debtor.

ON the 20th day of August 1931, it was ordered that the matter of the petition of the applicant be heard on the 21st day of September 1931 and that the said applicant do attend to be examined by this Court on that date.

G. G. HOOPER, District Judge.

Alipore, the 24th August 1931. (1790—1—1868)

MR. ABINASH CHANDRA ADHIKARY, M.A., B.L., intends to be enrolled as an Advocate, High Court.

(1695—4—1724)

MR. TARAPADA MUKHERJI, M.A., B.L., intends to be enrolled as an Advocate of the Calcutta High Court.

(1728—4—1769)

MR. SHYAMAPADA MAJUMDAR, M.A., B.L., intends to be enrolled as an Advocate of the Calcutta High Court.

(1702—4—1790)

MR. SACHINDRA NATH ROY CHOWDHURY intends to be enrolled as an Advocate, High Court.

(1813—4—1802)

Professor of Physiology, Medical College, Calcutta.

APPLICATIONS are invited for the above post.

The appointment is for three years in the first instance. Private practice is not allowed.

2. Applicants must have high academic qualifications with teaching experience. They may be members of the Provincial Medical Service or the medical profession generally.

3. Application stating all particulars should reach the Surgeon-General, Bengal, not later than the 14th October 1931.

4. Provincial Medical Service Rs. 650—100/2—1,350 *plus* non-practising allowance of Rs. 150 per mensem less 15 per cent. reduction of pay.

Private Medical Practitioner Rs. 800—50—1,500 per mensem *plus* a non-practising allowance of Rs. 150 per mensem, less 15 per cent. reduction of pay.

5. If a private medical practitioner is selected—

(*a*) his appointment will be on contract for three years;

(*b*) the appointment will be terminated on 6 months' notice on either side;

(*c*) the appointment will not be pensionable but the following Special Provident Fund concession will be allowed.

Personal subscription at 8¼ per cent. of pay and Government contribution at 75 per cent. of subscription credited half yearly. Interest will accumulate at the same rate as in the General Provident Fund.

(*d*) The successful applicant will be required to execute an agreement.

Further information will be obtained by enquiry from the Surgeon-General with the Government of Bengal.

Canvassing will disqualify.

WANTED a temporary Professor of Chemistry for the Presidency College, Calcutta, for one year at present on an initial pay ranging from Rs. 340 to Rs. 500 a month, according to the age of the selected candidate.

Candidates who should be British subjects, not less than 26 years old must possess a first class Master's Degree of an Indian University, or a good Honours Degree or Doctorate of a European or American University with teaching and research experience.

Applications will be received up to the 15th September 1931, by the Assistant Director of Public Instruction, Bengal, Calcutta, from whom further information can be obtained.

THE Bengal and Madras Service Family Pension Fund which is provisionally managed and assisted by Government has for its object the provision of monthly pensions for the maintenance of the widows and children of subscribers and is open, with certain exceptions, to all active and pensioned members of the Uncovenanted service of Government (except those serving under the Government of Bombay), and to Local Fund servants earning pensions from Government. Some of the special features of the fund are—(1) that widowed daughters incapable of remarriage or children labouring under such mental or bodily infirmities as incapacitate them from earning their livelihood or preclude the possibility of marriage (in case of a daughter) are admitted to its benefits; and (2) that subscribers to the Widows' and Daughters' branches are entitled to a refund of 30 per cent. of the premia paid, should the nominee predecease them after five years of admission. The second quinquennial valuation of the Fund has been completed by the actuary to the Government of India, and his report discloses very favourable results. For forms of application and rules of the Fund apply to the Accountant-General, Bengal, Imperial Secretariat Buildings, Calcutta.

Notice to creditors under section 10A of Act IX (B.C.) of 1879.

WHEREAS under sections 7 and 35 of the Court of Wards Act, IX (B.C.) of 1879, as amended up to date, the Court of Wards has assumed charge of the property of Srimati Pramila Bala Devi, Miss Hriday Bala Chowdhury, Miss Sukrity Bala Chowdhury and Miss Suprity Bala Chowdhury.

Notice is hereby given under section 10A of the said Act that all creditors having claims against the said Pramila Bala Devi, Hriday Bala Chowdhury, Sukrity Bala Chowdhury and Suprity Bala Chowdhury or their immovable property are hereby required to submit the same in writing to the Collector of Chittagong at his office at Chittagong within six months from the date of publication of this notice.

Creditors are also hereby warned that claims not submitted as required by this notice, are liable to be deemed to have been duly discharged/ceased to carry interest.

A. H. KEMM, Collector.

Chittagong, the 24th August 1931. (1791—3)

Estate Charles Horne, deceased.

PURSUANT to section 360 of Act XXXIX of 1925 and section 42 of Act XXVIII of 1866, the creditors and all persons interested in the estate of Charles Horne, late of Old Trinity House, Water Lane, Great Tower Street, London, and temporarily of Brookly Hotel, Felixstowe, Suffolk, tea merchant, who died at Pine Cliff Nursing Home, Felixstowe, on the 13th day of December 1930, and Letters of Administration to whose estate were granted by the High Court, Calcutta, on the 3rd day of August 1931, are hereby required to submit particulars of their claims to the undersigned on or before the 12th day of October 1931, after which date the Administrator will distribute the assets, having regard only to the claims of which notice shall then have been received.

ORR, DIGNAM, & CO.,
Solicitors to the Administrator.

32, Dalhousie Square, South, Calcutta, 1st September 1931.

(1839—1—1869)

Currency Notes.

PORTIONS of the following Currency Notes of the Calcutta Circle of issue are stated to have been destroyed and payment of their value has been claimed by the person whose name is shown against the numbers.

Any other person claiming a right to them is warned to communicate at once with the undersigned:

Regd. No.	Note No.	Value. Rs.	Name and address of the claimant.
W.D. 11 of 31-32.	S/64, 444337	100	Kiron Chandra Mukherjee, 1, Ghoshpara Lane, Salkhia, Howrah.
	S/64, 444338	100	
	S/44, 989127	100	

B. C. DUTT, Currency Officer.

Currency Office, Calcutta, the 22nd August 1931.

Currency Note.

A PORTION of the following Currency note of the Calcutta Circle of issue is stated to have been destroyed and payment of its value has been claimed by the person whose name is shown against the number.

Any other person claiming a right to it is warned to communicate at once with the undersigned—

Regd. No.	Note No.	Value.	Name and address of the claimant.
		Rs.	
W.D. 12 of 31-32.	S/19,829928	100	Patel Javerbhai Vaghajibhai c/o Bhagwandas Zaverdas Shah, Sojitra (*via* Petlad), district Baroda.

B. C. DUTT, Currency Officer.

Currency Office, Calcutta, the 27th August 1931.

In the matter of the Indian Companies Act, and

In the matter of N. N. Sen & Co. (Engnrs.), Ltd.

NOTICE is hereby given that a petition for the winding up of the abovenamed Company by the High Court of Judicature at Fort William in Bengal was, on the 31st day of August 1931, presented to the said Court by Messrs. A. K. Mitter & Co., creditors of the said Company, and that the said petition is directed to be heard before the Court on the 30th November 1931; and any creditor or contributory of the said Company desirous of opposing an order for the winding up of the said Company under the above Act should appear at the time of the hearing by himself or his attorney or advocate for that purpose; and a copy of the petition will be furnished to any creditor or contributory of the said Company requiring the same by the undersigned on payment of the prescribed charge for the same.

DUTT & SEN,

Attorneys for the petitioners.

6, Old Post Office Street, Calcutta, the 31st August 1931.

NOTE.—Rule 41 provides that any person who intends to appear on the hearing of the said petition must serve on or send by post to the abovenamed, notice in writing of his intention so to do. The notice must state the name and address of the person, or, if a firm, the name and address of the firm, and must be served, or, if posted, must be sent by post in sufficient time to reach the abovenamed not later than two clear days before the 30th November 1931.

(1835—1—1873)

In the matter of the Indian Companies Act, 1913, and

In the matter of the Fraserpet Fibre Company, Limited.

NOTICE is hereby given that at Extraordinary General Meetings of the abovenamed Company duly convened and held at its Registered Office at Norton Buildings, Old Court House Corner, Calcutta, on the 11th day of August 1931 and the 28th day of August 1931, the following special resolution was duly passed and confirmed, namely :—

"That the Company be wound up voluntarily and that Mr. C. H. Holmes of Holmes, Wilson & Co., Ltd., of Norton Buildings, Old Court House Corner, Calcutta, be appointed liquidator for the purpose of such winding up."

For Holmes Wilson & Co., Ltd.,

CHARLES H. HOLMES, Director,
Managing Agents.

Calcutta, the 31st August 1931. (1841—1—1871)

In the matter of the Indian Companies Act, 1913, and

In the matter of the Fraserpet Fibre Co., Ltd. (in voluntary liquidation).

NOTICE is hereby given, pursuant to section 209 of the Indian Companies Act, 1913, that a meeting of creditors of the abovenamed Company will be held at the Company's registered office at Norton Buildings, Old Court House Corner, Calcutta, at 3-30 p. m., on the 11th day of September 1931.

CHARLES H. HOLMES, Liquidator.

Calcutta, the 31st August 1931. (1840—1—1870)

In the matter of the Indian Companies Act, VII of 1913, and

In the matter of the West Jambad Colliery, Limited (in liquidation).

PURSUANT to section 217 of the Indian Companies Act notice is hereby given that a general meeting of the shareholders of the above Company will be held at No. 6, Church Lane, Calcutta, on Monday, the 12th October 1931, at 12 noon, when the liquidator will lay before the meeting an account of the winding up, showing how the same has been conducted and how the property of the Company has been disposed of, and for considering and passing such resolution as may be thought fit regarding the disposal of the books.

R. RAY, Liquidator.

Calcutta, the 29th August 1931. (1842—1—1882)

Imperial Library.

(Secretariat Buildings, 6, Esplanade East, Calcutta.)
Open on—

Weekdays and Saturdays from 10 A.M. to 7 P.M.
Sundays and Gazetted holidays from 2 P.M. to 5 P.M.

THE Imperial Library is also a Lending Library. It is free to all except children. There is no subscription to pay.

K. M. ASADULLAH, Librarian.

CINCHONA FACTORY PRODUCTS.

By order of the Government of Bengal Cinchona Factory Products as manufactured and packed at the Cinchona Factory, Mungpoo, Darjeeling district, will be sold and distributed by the Superintendent of the **Presidency Jail**, *in original packages* as received from the Mungpoo Factory, at the rates herein noted **from the 1st May 1926** :—

Quinine Sulphate.

For 60 lbs. and upwards at a time	..	Rs. 18 per lb.
For 6 lbs. and over but less than 60 lbs. at a time	..	„ 19 „
For any quantity less than 6 lbs.	..	„ 20 „

Quinine Hydrochloride.

For 60 lbs. and upwards at a time	..	Rs. 23 per lb.
For 6 lbs. and over but less than 60 lbs. at a time	..	„ 24 „
For any quantity less than 6 lbs.	..	„ 25 „

Quinine Di-Hydrochloride.

For 60 lbs. and upwards at a time	..	Rs. 25 per lb.
For 6 lbs. and over but less than 60 lbs. at a time	..	„ 26 „
For any quantity less than 6 lbs.	..	„ 27 „

Quinidine Sulphate.

For 60 lbs. and upwards at a time	..	Rs. 20 per lb.
For 6 lbs. and over but less than 60 lbs. at a time	..	„ 21 „
For any quantity less than 6 lbs.	..	„ 22 „

Cinchonidine Sulphate.

For 60 lbs. and upwards at a time	..	Rs. 25 per lb.
For 6 lbs. and over but less than 60 lbs. at a time	..	„ 26 „
For any quantity less than 6 lbs.	..	„ 27 „

Cinchonine Sulphate.

For 60 lbs. and upwards at a time	..	Rs. 12 per lb.
For 6 lbs. and over but less than 60 lbs. at a time	..	„ 13 „
For any quantity less than 6 lbs.	..	„ 14 „

Cinchona Febrifuge (Powder).

For 60 lbs. and upwards at a time	..	Rs. 9 per lb.
For 6 lbs. and over but less than 60 lbs. at a time	..	„ 9 „
For any quantity less than 6 lbs.	..	„ 10 „

Cinchona Febrifuge (Tablets).

For 60 lbs. and upwards at a time .. Rs. 10 per lb.
For 6 lbs. and over but less than 60 lbs. at a time .. .. .. „ 10 „
For any quantity less than 6 lbs. .. „ 11 „

Quinoidine (Tablets).

For 60 lbs. and upwards at a time .. Rs. 5 per lb.
For 6 lbs. and over but less than 60 lbs. at a time .. .. .. „ 5 „
For any quantity less than 6 lbs. .. „ 6 „

Quinoidine (in Mass).

For 60 lbs. and upwards at a time .. Rs. 4 per lb.
For 6 lbs. and over but less than 60 lbs. at a time .. .. .. „ 4 „
For any quantity less than 6 lbs. .. „ 5 „

Cinchona Bark (in 50 pound original bags).

Per bag .. .. .. Rs 25.

Quinine Tablets — per box of 200 tablets each. Rs. 2-8 (Bengal) Rs. 3 (outside Bengal).
Rs. 15-8-0 per lb.

Transit charges extra in every case.

Quinine Sulphate is for sale to Government Institutions and Missionaries only. It is not for sale to Private Firms or the General Public.

Cinchona Febrifuge in Powder and Tablet form (when in stock) is for sale to Government Institutions, Missionaries and the General Public.

Quinine Sulphate will be supplied to Hospitals and Dispensaries of this Presidency only at the wholesale rate of Rs. 18 per lb., irrespective of quantities. For all other purchasers the rates given above will apply.

Five and ten boxes of Quinine Tablets are sold to the public at the concession rates which will be intimated on application.

Provinces other than Bengal, Bihar and Orissa and Assam will get their supplies of Sulph. Quinine from the Director, Botanical Survey of India, Sibpur, Howrah.

Local sale at the jail gate from 10 to 12 noon.

The system of payment is by—*Cash in advance*—by "*Treasury Challans*," which should accompany the order or indent.

In cases where this is not possible, payment should be made by "*Remittance Transfer Receipts*" or crossed "*Cheques.*"

Indents unaccompanied by cash in advance will be sent Value Payable Post. Credit sale is not allowed except under special circumstances.

In the case of *Government officers* payments will be recovered by *Book Transfer*, i.e., *Countersigned Invoices*, in the event of *Cash* not accompanying the indent by "*Treasury Challans*," *Remittance Transfer Receipt* or *Cheque.*

2. Price and postage must accompany the price of the drug (when the drug is required by post).

The name of the Railway and Steamer Station or Post Office must be written distinctly when the parcels are required by Rail, Steamer or by Post. Railway parcels are sent by passenger train only.

A scale of postage is given below.

	1 oz.	2 oz.	4 ozs.	½ lb.	¾ lb.	1 lb.
	As.	As.	As.	As.	As.	Rs. A.
Quinine Sulph. ..	..	..	6	6	10	0 10
Cinchona Feb. ..	..	..	6	6	10	0 10
Cinchona Feb. Tablets	..	..	6	6	10	0 10
Quinoidin Tablets ..	..	..	..	..	..	1 2
Quinine Hydrochlor. ..	4	4	6	6	..	0 10
Quinine Di-hydrochlor.	4	4	6	6	..	0 10
Quinine Tablets ..	..	..	6	6	10	0 10

	1¼ lb.	2 lb.	3 lb.	4 lb.	5 lb.	6 lb.
	Rs. A.	Rs. A.	Rs. A.	Rs. A.	Rs. A.	Rs. A.
Quinine Sulph. ..	0 14	1 2	1 6	1 14	2 6	2 14
Cinchona Feb. ..	0 14	0 14	1 6	1 10	1 14	2 6
Cinchona Feb. Tablets	1 2	1 2	1 10	1 14	2 6	2 14
Quinoidine Tablets ..	..	2 2	3 2	..	..	..
Quinine Hydrochlor. ..	1 0	0 14	1 6	1 10	..	..
Quinine Di-hydrochlor.	1 0	1 2	1 12	2 4	..	..
Quinine Tablets ..	0 14	0 14	1 6	1 10	1 14	2 2

Two different drugs are not packed in the same parcel and postage must be paid separately for each kind.

N.B.—Postage stamps are not accepted as revenue.

Government reserve the right to alter the price without notice.

Registered No. C207 *No. 37 of 1931*

The Calcutta Gazette

THURSDAY, SEPTEMBER 10, 1931.

CONTENTS:

	PAGE.		PAGE.
Statement under the Cotton Ginning and Pressing Factories Act, 1925 ..	1143	Weather and Crop Report for the week ending 2nd September 1931	1151—1154
Return of Vital Statistics for the month of February 1931	1144—1149	Statement showing the daily gauge-readings of certain rivers for the week ending 27th August 1931	1155—1161
Statements of weekly gauge readings of certain rivers in Bengal	1150 & 1162	Final Forecast of the Jute Crop, 1931 ..	1163—1174

Supplement.

Official Papers.

FORM C—BENGAL.

STATEMENT OF COTTON PRESSED IN THE BENGAL PRESIDENCY FOR THE WEEK ENDING 26th AUGUST 1931.

[Section 5(2) of the Cotton Ginning and Pressing Factories Act, 1925.]

Name of Division or block.	Number of bales pressed.				District included in the block.
	During the week.	During the corresponding week, last year.	Since 1st September 1930 (the date prescribed by the Local Government as the commencement of the season).	During the corresponding period, last year.	
The Bengal Presidency	777 or 768·47 bales of 400 lbs. each.	76	35,146	33,286	All districts in the Presidency.

J. B. McBRIDE,

Chief Inspector of Factories, Bengal (offg.).

Vital Statistics for the month of February 1931 of the

Districts.	No.	Towns.	Population under registration according to census of 1921.			Births registered.		Deaths							
			Male.	Female.	Total.	Number registered (excluding still-births).	Still-born number registered.	Cholera.	Small-pox.	Plague.	Malaria.	Enteric fever.	Measles.	Relapsing fever.	Kala-azar.
Burdwan ..	1	Burdwan	19,583	15,033	34,616	61	..	..	1	..	9	1	..	..	..
	2	Raniganj	8,040	6,496	14,536	39	2	..	..	..	2	..	..	..	..
	3	Asansol	15,464	11,035	26,499	28	..	..	..	..	..	..	..	..	..
Bankura ..	4	Bankura	13,523	11,889	25,412	74	..	..	1	..	..	..	..	..	..
	5	Vishnupur	9,786	9,562	19,398	46	..	..	55	..	11	..	..	..	..
	6	Sonamukhi	5,140	5,504	10,644	26	..	..	14	..	3	..	..	..	..
Midnapur ..	7	Midnapur	15,724	13,241	28,965	54	..	..	..	..	..	..	..	..	..
	8	Ghatal ..	5,655	5,115	10,770	37	1	..	1	..	..	..	..	..	..
Hooghly ..	9	Hooghly-Chinsura.	16,723	13,215	29,938	73	..	..	8	..	1	..	1	..	1
	10	Serampur	20,210	12,987	33,197	80	..	4	3	..	1	1	1	..	..
	11	Rishra-Konnagar.	15,030	8,229	23,259	38	..	1	32	..	..	..	..	..	..
	12	Baidyabati	9,174	7,297	16,471	49	..	4	2	..	..	..	..	..	..
	13	Bhadreswar	14,487	7,594	22,081	32	..	..	..	..	..	..	..	..	..
	14	Champdani	17,193	7,459	24,652	46	..	..	..	..	..	..	..	..	..
Howrah ..	15	Howrah	128,472	66,829	195,301	386	21	17	187	..	1	11	4	..	2
	16	Bally ..	15,264	7,945	23,209	30	..	1	..	..	..	1	..	..	1
24-Parganas	17	South Suburban.	19,083	14,262	33,345	96	1	4	..	..	3	..	..	..	1
	18	Tollyganj	13,326	8,311	21,637	46	..	2	1	..	..	..	..	..	..
	19	Budge-Budge.	17,883	7,840	25,723	11	..	2	..	..	..	..	..	..	..
	20	Baranagar	19,989	12,095	32,084	68	3	8	..	..	2	..	..	..	..
	21	Kamarhati	14,965	8,053	23,018	29	..	..	1	..	..	..	..	..	..
	22	Rajpur ..	5,760	5,652	11,412	32	2	..	..	..	..	..	..	..	..
	23	South Dum-Dum.	8,736	5,294	14,030	41	..	6	2	..	..	..	1	..	..
	24	Barrackpur	14,877	7,583	22,460	17	..	..	..	..	..	..	..	..	..
	25	Panihati	6,148	4,013	10,161	38	..	2	1	..	..	..	..	..	..
	26	North Barrackpur.	9,452	5,981	15,433	37	..	1	1	..	1	..	..	..	..
	27	Titagarh	36,533	15,918	52,451	66	1	..	..	..	..	..	..	..	..
	28	Garulia ..	9,077	4,019	13,096	8	..	..	..	..	..	..	..	..	..
	29	Naihati	15,464	7,822	23,286	27	..	1	6	..	2	..	..	..	..
	30	Kanchrapara.	7,182	3,150	10,332	32	..	..	..	..	..	..	..	..	..
	31	Bhatpara	45,723	19,886	65,609	101	3	..	7	..	3	2	1	..	..
	32	Basirhat	10,162	9,105	19,267	91	..	2	..	..	3	1	..	..	..
	33	Baduria	7,434	6,623	14,057	30	..	4	1	..	..	..	..	..	1
Calcutta ..	34	Calcutta ..	724,248	353,016	1,077,264	1,839	100	95	166	..	44	48	14	..	26
Nadia ..	35	Krishnagar	11,277	10,932	22,209	25	..	..	..	..	..	..	..	..	..
	36	Nabadwip	7,291	8,293	15,584	23	..	7	1	..	..	..	..	..	..
	37	Santipur	11,342	13,450	24,792	51	..	1	1	..	15	..	..	..	..

towns with a population of 10,000 and over in Bengal.

registered

Other fevers	Dysentery.	Diarrhœa.	Influenza.	Pneumonia.	Phthisis	Other respiratory diseases.	Injuries including suicide	Deaths from child-birth.	Other causes.	Total of all causes			Total of corresponding month of previous year.			No	Towns.
										Male	Female	Total	Male	Female.	Total		
..	4	5	..	10	2	8	.	2	5	16	26	42	25	24	49	1	Burdwan
2	1	..	..	1	1	1	1	1	9	7	12	19	17	17	34	2	Raniganj
..	..	..	..	2	1	..	3	1	13	8	12	20	23	22	45	3	Asansol
2	1	4	..	1	..	2	1	..	18	15	15	30	9	15	24	4	Bankura.
3	..	4	..	2	..	2	..	1	8	43	43	86	20	23	43	5	Vishnupur.
2	..	2	..	3	..	2	..	1	15	21	21	42	11	15	26	6	Sonamukhi.
3	1	2	..	5	1	..	..	.	10	11	11	22	25	19	44	7	Midnapur.
7	..	3	..	5	..	..	1	..	6	15	10	25	14	11	25	8	Ghatal
5	1	4	..	9	..	..	1	3	8	21	21	42	44	22	66	9	Hooghly-Chinsura
5	4	4	..	2	3	3	1	..	10	24	18	42	18	19	37	10	Serampur.
4	..	2	..	3	1	1	.	..	7	32	19	51	8	6	14	11	Rishra-Konnagar
1	3	2	..	2	1	1	..	..	4	10	10	20	7	7	14	12	Baidyabati.
2	..	5	..	..	..	2	2	..	13	9	15	24	18	16	34	13	Bhadreswar.
..	1	..	..	2	..	2	..	..	11	11	5	16	6	9	15	14	Champdani.
4	63	32	..	113	22	55	12	1	129	331	322	653	302	211	513	15	Howrah
4	2	3	..	5	..	4	..	..	6	12	15	27	10	8	18	16	Bally.
5	7	7	..	3	3	1	1	..	16	32	19	51	26	28	54	17	South Suburban.
3	3	..	..	2	1	..	..	..	1	9	4	13	18	17	35	18	Tollygunj
6	3	4	..	..	1	2	..	..	5	15	8	23	29	18	47	19	Budge-Budge
8	5	2	..	2	2	3	..	1	17	20	30	50	25	35	60	20	Baranagar.
5	3	..	..	..	5	4	1	..	4	18	5	23	22	11	33	21	Kamarhati.
1	2	2	..	4	..	1	1	.	3	6	8	14	5	13	18	22	Rajpur
1	4	..	..	2	2	4	.	..	6	19	9	28	10	8	18	23	South Dum-Dum.
2	.	..	1	1	..	..	2	..	1	3	4	7	5	8	13	24	Barrackpur.
1	2	3	..	2	..	1	..	..	5	9	8	17	10	6	16	25	Panihati
..	5	..	..	2	..	1	..	..	2	8	5	13	6	12	18	26	North Barrackpur.
39	..	1	..	..	..	..	1	..	8	29	15	44	104	71	175	27	Titagarh.
..	..	..	..	..	..	..	..	..	1	1	..	1	3	5		28	Garulia.
1	1	..	..	..	2	..	..	..	4	8	9	17	7	9	16	29	Naihati
7	..	1	..	1	..	2	..	..	..	7	4	11	8	7	15	30	Kanchrapara
33	2	9	..	6	1	2	1	1	8	43	33	76	31	14	45	31	Bhatpara.
4	3	..	..	8	2	..	1	1	9	17	17	34	22	15	37	32	Basirhat.
6	3	..	..	..	..	..	..	..	..	9	6	15	4	9	13	33	Baduria.
114	120	98	20	336	213	235	60	4	852	1,389	1,056	445	1,541	1,180	2,721	34	Calcutta.
6	..	..	..	..	..	3	..	..	6	5	10	15	7	13	20	35	Krishnagar
6	..	1	..	2	..	..	1	..	8	10	16	26	7	11	18	36	Nabadwip.
5	..	2	..	7	2	2	1	..	11	25	22	47	26	29	55	37	Santipur

Vital Statistics for the month of February 1931 of the

Districts.	No.	Towns.	Population under registration according to census of 1921.			Births registered.		Deaths							
			Male.	Female.	Total.	Number registered (excluding still-births).	Still-born number registered.	Cholera.	Small-pox.	Plague.	Malaria.	Enteric fever.	Measles.	Relapsing fever.	Kala-azar.
Murshidabad	38	Berhampur	14,719	11,951	26,670	37	1	..	..	..	4	3	..		..
	39	Murshidabad	5,401	5,268	10,669	13	3	..	..	..	..	..	..	..	..
	40	Jiaganj-Azimganj.	5,676	5,555	11,231	10	1	5	..	..	7	..	..	..	..
	41	Kandi ..	5,903	5,884	11,787	25	..	..	..	..	..	..	..	..	1
	42	Jangipur	5,167	5,572	10,739	40	1	..	..	..	..	..	..	..	1
Jessore ..	43	Jessore ..	6,410	3,720	10,130	10	..	..	..	..	1	..	..	..	..
Khulna ..	44	Khulna ..	10,235	5,814	16,049	18	..	6	1	..	..	..	..	..	..
	45	Satkhira ..	5,548	4,751	10,299	37	..	12	..	..	..	..	..	..	1
Rajshahi ..	46	Rajshahi	13,831	10,767	24,598	56	..	..	..	..	1	1	..	..	2
Dinajpur ..	47	Dinajpur	10,973	7,052	18,025	13	..	..	..	..	3	..	..	..	..
Jalpaiguri	48	Jalpaiguri	8,965	5,555	14,520	33	..	..	..	..	3	..	..	..	..
Darjeeling	49	Darjeeling	12,877	9,381	22,258	52	2	..	..	..	..	..	..	..	..
Rangpur ..	50	Rangpur	12,059	7,017	19,076	18	..	..	..	..	1	..	..	..	1
Bogra ..	51	Bogra ..	7,257	5,065	12,322	17	..	..	..	..	.	..	..	..	..
Pabna ..	52	Pabna ..	10,352	8,991	19,343	13	..	..	..	..	..	..	..	..	..
	53	Sirajganj	13,756	11,762	25,518	43	..	..	..	..	1	..	..	..	3
Malda ..	54	English Bazar.	7,869	6,188	14,057	26	..	..	..	..	8	..	..	..	..
	55	Nawabganj	6,081	6,552	12,633	63	1	..	..	..	..	..	..	..	1
Dacca ..	56	Dacca ..	67,333	52,117	119,450	357	17	6	1	..	..	3	..	..	12
	57	Narayanganj.	19,442	11,160	30,602	115	3	4	..	..	..	..	..	..	..
Mymensingh	58	Mymensingh	16,597	8,690	25,287	44	2	..	..	..	..	..	..	..	..
	59	Jamalpur	12,566	10,547	23,113	94	..	..	..	..	..	..	..	..	3
	60	Sherpur ..	9,768	8,045	17,813	79	1	..	..	..	1	..	..	..	1
	61	Kishorganj	10,600	8,018	19,518	26	..	..	..	..	..	..	..	..	..
	62	Bajitpur ..	5,946	5,622	11,568	26	..	..	..	..	..	..	..	..	..
	63	Tangail ..	7,542	6,763	14,305	17	1	..	..	..	..	..	..	..	1
Faridpur ..	64	Faridpur	8,772	5,731	14,503	31	..	..	..	..	4	..	..	..	..
	65	Madaripur	14,309	10,988	25,297	79	..	3	..	..	..	1	1	..	..
Bakarganj	66	Barisal ..	17,584	9,160	26,744	46	..	5	..	..	..	..	..	..	..
	67	Pirojpur ..	7,515	6,326	13,841	52	..	1	..	..	..	..	1	..	..
Chittagong	68	Chittagong	24,117	11,913	36,030	81	1	7	..	..	..	..	..	..	..
Tippera ..	69	Comilla ..	15,533	10,381	25,914	26	1	..	..	..	..	..	..	..	1
	70	Brahmanbaria.	12,367	11,047	23,414	112	..	..	..	..	..	..	..	..	..
	71	Chandpur	10,636	4,482	15,118	22	..	1	..	..	2	..	..	..	..
		Total of month.	1,769,876	1,049,372	2,818,748	5,539	160	212	494	..	137	73	24	..	60
		Total of corresponding month of previous year ..	..	..	..	4,741	176	252	314	..	192	55	28	17	69
		Increase + or decrease −	..	..	..	+798	−7	−40	+180	..	−55	+13	−4	−17	−9

Remarks.—1. The above table is compiled from returns collected by the municipalities and submitted to the Director of Public Health by the approximate to the actual in a proportion of cases and in a few instances are obviously incomplete.

2. The vital statistics of municipalities with a population of less than 10,000 have been excluded from this statement and 1918.

3. The birth and death ratios per mile per annum have been omitted from this statement according to Government of India

CALCUTTA, *the 25th August 1931.*

towns with a population of 10,000 and over in Bengal.

registered.

Other fevers.	Dysentery.	Diarrhœa.	Influenza.	Pneumonia.	Phthisis.	Other respiratory diseases.	Injuries including suicide.	Deaths from child-birth.	Other causes.	Total of all causes.			Total of corresponding month of previous year.			No.	Towns.
										Male.	Female.	Total.	Male.	Female.	Total.		
10	7	..	..	3	2	3	1	..	12	25	20	45	29	27	56	38	Berhampur.
..	..	..	..	1	..	..	..	..	1	6	5	11	7	12	19	39	Murshidabad.
..	2	..	..	3	..	..	..	1	3	8	13	21	12	7	19	40	Jiaganj-Azimganj.
2	2	..	..	1	..	2	..	..	7	8	7	15	11	7	18	41	Kandi.
15	1	..	..	1	..	..	..	..	..	8	10	18	5	6	11	42	Jangipur.
..	1	..	..	4	1	..	..	..	5	7	5	12	11	7	18	43	Jessore.
10	..	..	..	..	..	..	2	..	..	9	10	19	12	8	20	44	Khulna.
5	1	..	..	4	1	..	..	1	8	16	17	33	8	6	14	45	Satkhira.
5	3	1	..	2	1	1	1	..	11	19	10	29	20	14	34	46	Rajshahi.
3	..	..	..	3	..	..	..	..	5	9	5	14	11	13	24	47	Dinajpur.
..	2	..	..	..	1	1	1	..	3	8	3	11	11	4	15	48	Jalpaiguri.
4	..	1	..	6	4	..	1	..	15	15	16	31	22	11	33	49	Darjeeling.
2	..	..	..	1	1	..	..	..	6	11	1	12	9	2	11	50	Rangpur.
2	..	..	..	..	1	..	..	..	4	5	2	7	3	..	3	51	Bogra.
4	..	..	..	..	..	..	..	..	3	5	2	7	12	5	17	52	Pabna.
13	3	..	..	..	..	..	4	..	7	21	10	31	16	14	30	53	Sirajganj.
..	1	1	..	3	..	..	..	1	4	7	11	18	12	7	19	54	English Bazar.
13	4	3	..	1	..	..	..	..	20	22	20	42	18	17	35	55	Nawabganj.
7	18	9	..	23	5	33	11	1	97	123	103	226	125	110	235	56	Dacca.
16	1	..	..	..	1	1	..	1	35	26	33	59	40	41	81	57	Narayanganj.
14	..	2	..	2	2	2	2	..	15	20	19	39	17	10	27	58	Mymensingh.
6	2	..	..	1	..	..	4	4	11	12	19	31	9	8	17	59	Jamalpur.
5	..	..	..	..	..	2	..	..	13	18	4	22	7	9	16	60	Sherpur.
4	..	2	..	..	..	4	..	..	3	10	3	13	10	5	15	61	Kishorganj.
2	..	..	..	..	..	..	..	2	3	3	4	7	3	4	7	62	Bajitpur.
4	1	..	..	..	..	1	..	..	2	5	4	9	17	12	29	63	Tangail.
..	..	..	..	2	..	1	..	..	2	5	4	9	9	6	15	64	Faridpur.
4	3	..	..	..	..	..	..	..	8	9	11	20	12	7	19	65	Madaripur.
11	4	1	..	3	1	..	..	..	10	18	17	35	16	15	31	66	Barisal.
6	1	..	..	..	..	..	3	..	3	9	6	15	7	7	14	67	Pirojpur.
9	2	..	..	2	1	..	..	1	24	24	22	46	26	18	44	68	Chittagong.
1	1	..	..	1	..	..	1	..	4	5	4	9	10	7	17	69	Comilla.
5	2	2	..	..	..	..	..	1	24	17	17	34	11	18	29	70	Brahmanbaria.
..	2	1	..	..	..	..	..	..	6	9	3	12	4	7	11	71	Chandpur.
488	308	225	21	610	288	390	123	30	1,610	2,700	2,393	5,093	..	..	..		
680	310	291	42	571	281	557	125	29	1,626	3,025	2,414	5,439	..	..	..		
−192	−2	−66	−21	+39	+7	−167	−2	+1	−16	−235	−111	−346	..	..	..		

District Health Officers. Taken as a whole, the statement possesses a relative value, although the figures for individual towns probably only

incorporated in the returns for districts as ordered in Government of Bengal, Municipal Department, letter No. 118 San., dated the 8th February

Education Department, letter No. 93, dated the 26th March 1918.

R. B. KHAMBATA, M.R.C.S. (Eng.), L.R.C.P. (Lond.), D.P.H. (Camb.),
Director of Public Health, Bengal, (offg.).

Vital Statistics for the month of February 1931 of the

Division.	No.	Districts.	Population under registration according to census of 1921.			Births registered.		Deaths							
			Male.	Female.	Total.	Number registered (excluding still-births).	Still born number registered.	Cholera.	Small-pox.	Plague.	Malaria.	Enteric fever.	Measles.	Relapsing fever.	Kala-azar.
Burdwan ..	1	Burdwan..	689,282	673,993	1,363,275	3,873	26	74	49	..	919	8	1	3	19
	2	Birbhum	422,986	424,584	847,570	2,906	32	5	11	..	708	16	20	2	..
	3	Bankura	480,935	483,552	964,487	2,920	12	52	46		854	5	2	10	7
	4	Midnapore	1,318,273	1,308,652	2,626,925	7,565	209	516	50	..	1,672	42	13	..	2
	5	Hooghly ..	468,451	462,093	930,544	2,250	1	72	38	..	633	40	1	3	3
	6	Howrah ..	391,415	387,478	778,893	1 902	23	80	32	..	90	14	2	49	8
Presidency	7	24-Parganas	1,062,266	989,125	2,051,391	4,833	23	642	32	..	396	38	2	40	64
	8	Nadia ..	731,335	693,552	1,424,887	4,580	69	48	11	..	2,743	2	1	6	12
	9	Murshida-bad.	591,676	599,742	1,191,418	4,683	149	31	24	..	1,423	5	1	3	3
	10	Jessore ..	887,182	824,898	1,712,080	3,424	128	95	17	..	2,040	3	34	1	21
	11	Khulna ..	741,741	684,945	1,426,686	4,366	126	108	3	..	670	27	4	16	27
Rajshahi ..	12	Rajshahi	753,539	711,538	1,465,077	3,940	224	146	..	..	2,233	8	3	2	23
	13	Dinajpur	885,427	801,901	1,687,328	4,701	97	16	12	..	1,418	139	55	33	73
	14	Jalpaiguri	494,432	427,317	921,749	2,644	135	1	..	..	657	3	..	2	3
	15	Darjeeling	136,217	124,273	260,490	855	46	1	..	..	184	6	..	..	5
	16	Rangpur	1,304,781	1,183,997	2,488,778	6,881	330	64	92	..	1,813	214	28	150	43
	17	Bogra ..	521,470	504,814	1,026,284	2,760	143	59	3	..	567	7	10	2	20
	18	Pabna ..	682,594	662,039	1,344,633	3,750	149	148	.. 5	..	1,472	9	2	9	9
	19	Malda ..	478,872	480,103	958,975	2,686	26	2	2	..	1,885	14	..	..	17
Dacca ..	20	Dacca ..	1,485,445	1,490,470	2,975,915	8,190	275	478	105	..	654	55	6	1	46
	21	Mymensingh	2,447,431	2,278,695	4,726,126	11,653	493	806	51	..	834	73	30	58	52
	22	Faridpur	1,124,661	1,085,397	2,210,058	5,880	170	333	28	..	1,397	22	9	14	47
	23	Bakarganj	1,318,064	1,265,107	2,583,171	9,155	208	411	3	..	15	..	..	..	9
Chittagong	24	Chittagong	753,765	821,627	1,575,392	4,640	230	32	30	..	274	24	11	22	31
	25	Noakhali	738,722	734,064	1,472,786	7,161	371	103	13	..	188	55	7	43	53
	26	Tippera ..	1,307,598	1,311,029	2,678,627	7,842	263	391	23	..	214	41	1	45	137
	27	Chittagong Hill Tracts.	..	..	..	..	..	..	..	..	..	..	..	..	Not
		Total of month for Bengal.	22,288,560	21,414,985	43,703,545	126,040	3,967	4,714	675	..	25,953	870	243	514	734
		Total of corresponding month of previous year.	..	..	..	105,326	3,954	4,844	689	..	27,931	724	208	265	813
		Increase + or decrease —.	..	..	..	+20,714	+13	−130	−14	..	−1,978	+146	+35	+249	−79

Remarks.—1. The above table is compiled from returns collected by the Subdivisional Officers and submitted to the Director of
individual districts probably only approximate to the actual.
2. The vital statistics of municipalities with a population of less than 10,000 have been included in this statement with
3. Divisional totals and the birth and death ratios per mille per annum have been omitted from this statement according

CALCUTTA, *the 25th August 1931.*

districts excluding towns with a population of 10,000 and over in Bengal.

registered.

Other fevers.	Dysentery.	Diarrhœa.	Influenza.	Pneumonia.	Phthisis.	Other respiratory diseases.	Injuries including suicide.	Deaths from child-birth.	Other causes.	Total of all causes.			Total of corresponding month of previous year.			No.	Districts.
										Male.	Female.	Total.	Male.	Female.	Total.		
1,103	33	73	10	109	44	37	49	16	284	1,528	1,303	2,831	1,433	1,326	2,759	1	Burdwan.
647	24	16	..	54	10	65	18	8	182	920	866	1,786	894	842	1,736	2	Birbhum.
574	40	118	7	92	36	48	24	15	367	1,182	1,115	2,297	960	841	1,801	3	Bankura.
1,691	232	184	5	297	100	47	69	61	1,165	3,158	2,988	6,146	3,149	2,908	6,057	4	Midnapore.
320	25	87	2	110	37	39	23	18	189	804	836	1,640	822	831	1,653	5	Hooghly.
251	36	149	7	62	53	43	40	2	196	630	484	1,114	730	719	1,449	6	Howrah.
982	63	78	14	102	39	57	38	14	541	1,608	1,534	3,142	2,187	2,095	4,282	7	24-Parganas.
496	22	9	5	73	26	26	46	13	449	2,080	1,908	3,988	2,255	1,971	4,226	8	Nadia.
641	11	8	..	30	8	8	22	17	483	1,499	1,219	2,718	1,500	1,272	2,772	9	Murshidabad.
465	28	13	3	57	15	24	28	20	308	1,642	1,530	3,172	2,390	2,207	4,597	10	Jessore.
426	23	18	8	33	21	28	45	26	505	1,088	950	1,988	1,146	1,101	2,247	11	Khulna.
336	5	8	2	8	3	10	30	26	331	1,686	1,488	3,174	1,948	1,822	3,770	12	Rajshahi.
880	66	57	96	146	62	65	119	77	56	1,803	1,567	3,370	1,790	1,597	3,387	13	Dinajpur.
234	28	24	14	139	38	25	14	49	255	777	709	1,486	1,109	992	2,101	14	Jalpaiguri.
150	9	2	1	18	26	9	5	6	91	282	231	513	354	258	612	15	Darjeeling.
1,764	62	29	4	131	22	123	27	66	162	2,306	2,488	4,794	1,941	1,752	3,693	16	Rangpur.
490	4	7	9	6	17	9	10	13	136	697	672	1,369	673	623	1,296	17	Bogra.
561	12	5	9	25	21	15	22	25	222	1,320	1,251	2,571	1,606	1,701	3,307	18	Pabna.
194	3	..	..	8	3	3	14	10	194	1,246	1,103	2,349	1,249	1,217	2,466	19	Malda.
1,946	172	69	7	45	35	58	40	56	980	2,486	2,317	4,753	2,411	2,428	4,839	20	Dacca.
3,152	64	36	38	37	48	80	47	48	1,117	3,254	3,317	6,571	3,153	3,130	6,283	21	Mymensingh.
1,173	96	54	10	50	39	70	28	41	588	2,132	1,862	3,994	2,082	2,020	4,102	22	Faridpur.
2,739	54	19	4	12	7	13	42	27	1,676	2,565	2,466	5,031	1,917	1,803	3,720	23	Bakarganj.
1,847	20	27	5	43	5	11	39	31	222	1,394	1,290	2,684	1,334	1,102	2,436	24	Chittagong.
1,107	85	70	24	60	22	92	48	69	528	1,227	1,340	2,567	1,210	1,108	2,318	25	Noakhali.
1,557	117	58	4	20	22	18	12	23	727	1,714	1,696	3,410	1,920	1,872	3,792	26	Tippera.
																27	Chittagong Hill Tracts.

under registration.

25,726	1,344	1,218	288	1,767	759	1,023	899	777	11,954	41,028	38,430	79,458	..	..	..	
27,012	1,234	1,224	246	1,910	727	1,035	768	682	11,389	42,163	39,538	81,701	..	..	..	
−1,286	+110	−6	+42	−143	+32	−12	+131	+95	+565	−1,135	−1,108	−2,243	..	..	..	

Public Health by the District Health Officers. Taken as a whole, the statement possesses a relative value, although the figures for those of the respective districts as ordered in Government of Bengal, Municipal Department letter No. 118 San., dated the 8th February 1918. to Government of India, Education Department letter No. 93, dated the 26th March 1918.

R. B. KHAMBATA, M.R.C.S. (Eng.), L.R.C.P. (Lond.), D.P.H. (Camb.),

Director of Public Health, Bengal (offg.).

Statement showing the gauge readings at Dacca Waterworks on the river Buriganga for the week ending 29th August 1931.

Date.	At highest water.		At lowest water.		Commencement of—		Remarks.	
	Time.	Reading.	Time.	Reading	Ebb tide	Flow tide	At 7 a.m.	At 5 p.m.
1931.								
23rd August ..							20·6	20·4
24th „ ..							20·2	20·1
25th „ ..							20·0	19·9
26th „ ..	Tide is not perceptible.						19·7	19·6
27th „ ..							19·5	19·4
28th „ ..							19·3	19·2
29th „ ..							19·05	18·95

B. M. on settling tank 39·49 O. M. S. L. Zero is at O. M. S. L.

Notable high and low water-levels of previous years.

		Taken at high tide.				Taken at low tide.
27th August	1906 ..	70·5		23rd February	1907 ..	51·06
5th September	1909 ..	66·86		13th „	1908 ..	51·06
10th August	1910 ..	69·86		12th March	1912 ..	51·06
1st „	1911 ..	68·46		6th „	1914 ..	50·60
13th „	1912 ..	67·16		22nd February	1915 ..	50·30
31st „	1915 ..	69·7		15th „	1916 ..	50·60
8th „	1916 ..	68·1		3rd March	1917 ..	51·0
12th „	1917 ..	67·1		21st February	1918 ..	51·40
13th „	1918 ..	69·12		26th „	1919 ..	50·4
2nd „	1919 ..	66·8		18th „	1920 ..	50·9
8th September	1920 ..	66·9		19th „	1921 ..	50·9
28th July	1921 ..	68·4		8th March	1922 ..	51·05
10th August	1922 ..	68·00		14th „	1923 ..	50·8
31st July	1923 ..	66·15		16th February	1924 ..	50·50
29th August	1924 ..	68·82		5th March	1925 ..	50·9
8th September	1925 ..	68·52		9th February	1926 ..	2·2
15th August	1926 ..	19·6		27th „	1927 ..	2·10
17th September	1927 ..	18·70		16th „	1928 ..	2·2
22nd August	1928 ..	20·0		21st „	1929 ..	2·0
13th July	1929 ..	17·8		24th „	1930 ..	2·3
12th September	1930 ..	18·65				

N. B.—Zero of the gauge at Dacca Waterworks prior to 11 a.m. on the 8th January 1926= −48·51 with reference to P. W. D. datum.
Zero of the gauge at Dacca Waterworks since 11 a.m. on the 8th January 1926=0·00 with reference to P. W D datum.

W. R. ROBSON, *Executive Engineer,*
Khulna Division

KHULNA, *the 5th September 1931.*

DISTRICT REPORTS ON WEATHER AND CROPS.

For the week ending on the 2nd September 1931.

Summary.—During the week rainfall was generally light to moderate and its effect was beneficial to standing crops Transplantation of winter paddy seedlings is progressing favourably. Cutting, steeping and washing of jute are also going on. The prospects of standing crops are generally good except in the flood affected areas Distress continues in parts of Nadia, Rangpur and Bogra 5,258 persons were gratuitously relieved in Gaibandha and Kurigram subdivisions of Rangpur. Relief measures are also being continued in other places. The average price of common rice for the province fell by 0·12 per cent. as compared with that of the previous week.

Serial No.	District and subdivision.	Rainfall.	Price of common rice, in seers, per rupee.		Character of the weather, condition of crops, etc
			This week	Previous week	
1	2	3	4	5	6
		Inches.			
1	24-Parganas ..	1·60	9½	9⅝	Weather seasonable. Fodder and water are sufficient Harvesting of jute continues
	Diamond Harbour.	2·97	10½	10½	
	Barrackpore ..	3·00	8	8½	
	Baraset ..	1·16	9	9	
	Basirhat ..	3·27	9	9	
2	Nadia ..	1·80	9½	9½	Weather seasonable Stock of rice is sufficient. Gratuitous relief continues in Kushtia and Chuadanga subdivisions Fodder and water are sufficient.
	Kushtia ..	1·05	10	10	
	Meherpur ..	1·10	8 3/16	8 13/16	
	Chuadanga ..	0·51	10	10	
	Ranaghat ..	0·91	10	10	
3	Murshidabad ..	1·22	10½	10½	Weather hot and cloudy More rain is wanted. Prospects of crops are favourable. Cattle-disease is reported from thanas Raghunathganj and Suti in Jangipur subdivision Fodder and water are sufficient. Harvesting of jute continues in Lalbagh and Jangipur subdivisions.
	Lalbagh ..	0·73	10½	10½	
	Jangipur ..	0·55	11	10½	
	Kandi ..	1·12	12	12	
4	Jessore ..	0·87	9	9	Weather seasonable. Harvesting of *aus* paddy is going on. Fodder and water are sufficient.
	Jhenidah ..	0·63	10	10	
	Magura ..	0·50	10	10	
	Narail ..	1·50	9½	9½	
	Bongaon ..	1·65	9½	9½	
5	Khulna ..	1·86	11	11	Weather seasonable; its effects on crops are good Cattle-disease is reported from thanas Syamnagar and Satkhira. Fodder and water are sufficient. Export and import of rice continue slowly.
	Satkhira ..	1·12	10	10	
	Bagerhat ..	0·33	8½	8½	

Serial No.	District and subdivision.	Rainfall.	Price of common rice, in seers, per rupee.		Character of the weather, condition of crops, etc.
			This week.	Previous week.	
1	2	3	4	5	6
		Inches.			
6	Burdwan ..	0·52	10	10	Weather seasonable. Fodder and water are sufficient.
	Asansol ..	1·50	9	9	
	Katwa ..	2·20	11	11	
	Kalna ..	0·82	10½	10½	
7	Birbhum ..	0·90	12¾	12¾	Weather hot and cloudy. Fodder and water are sufficient.
	Rampurhat ..	0·11	11½	11	
8	Bankura ..	1·17	11	11	Weather seasonable. Prospects of standing crops are good. Fodder and water are sufficient.
	Vishnupur ..	1·40	12	11¾	
9	Midnapore ..	2·09	12⅝	12 1/16	Weather seasonable. Fodder and water are sufficient.
	Contai ..	2·16	13	12	
	Tamluk ..	Nil	10½	10½	
	Ghatal ..	1·21	12½	12⅝	
	Jhargram ..	1·65	11¾	11¾	
10	Hooghly ..	2·25	9½	9½	Weather seasonable. Fodder is sufficient. Transplantation of *aman* paddy continues.
	Serampore ..	1·24	9½	9½	
	Arambagh ..	(*n*)	(*n*)	13½	
11	Howrah ..	1·88	10	8	Weather seasonable and beneficial to standing crops. No export or import. Fodder and water are sufficient.
	Uluberia ..	1·72	11½	11	
12	Rajshahi (Rampur-Boalia).	1·21	10	9	Weather sultry. Fodder is insufficient in Gurudaspur and Singra thanas. Cattle-disease is reported from Gurudaspur thana. Transplantation of *aman* paddy is going on. Twelve annas jute crop is harvested.
	Naogaon ..	0·04	10½	10½	
	Nator ..	1·52	9⅜	8½	
13	Dinajpur ..	0·10	10	10	Weather seasonable; its effects on agricultural operations are favourable. Prospects of standing crops are fair. More rain needed. Fodder and water are sufficient.
	Thakurgaon ..	0·18	11	11	
	Balurghat ..	0·03	12	12	
14	Jalpaiguri ..	1·65	7	6	Weather favourable on agricultural operations. Prospects of standing crops are fair. Fodder and water are sufficient.
	Alipur ..	0·90	6½	6½	
15	Darjeeling ..	0·56	7	7	Marua and paddy are growing. Potatoes and maize are being harvested. Fodder and water are sufficient.
	Kurseong ..	4·09	7	7	
	Siliguri ..	1·66	10	9	
	Kalimpong ..	(*n*)	(*n*)	(*n*)	

(*n*) Not reported.

Serial No.	District and subdivision	Rainfall.	Price of common rice, in seers, per rupee		Character of the weather, condition of crops, etc.
			This week.	Previous week.	
1	2	3	4	5	6
		Inches.			
16	Rangpur ..	1·24	9	9	Weather hot and cloudy Prospects of crops are unsatisfactory Transplantation of *aman* paddy is going on. Harvesting of jute still continues Fodder is insufficient in flooded areas Water sufficient 5,258 persons received gratuitous relief in Gaibandha and Kurigram subdivisions.
	Nilphamari ..	0·32	9½	10	
	Kurigram ..	0·06	10	9½	
	Gaibandha ..	0·22	9	9	
17	Bogra ..	0·74	10½	10½	Flood water is fully subsiding Distribution of agricultural loans and gratuitous relief is going on at centres. Transplantation of *aman* crop has commenced at places. Harvesting of *aus* crop and steeping of jute continue.
18	Pabna ..	0·53	9½	9½	Export and import are normal Prices are steady. Fodder is insufficient Prospects of crops are gloomy.
	Sirajganj ..	(*n*)	(*n*)	9½	
19	Malda ..	1·92	11	11	Weather seasonable. Prospects of standing crops are good Transplantation of paddy continues. Fodder and water are sufficient.
20	Cooch Behar ..	1·49	9⅜	9⅜	Weather seasonable Cutting, steeping and washing of jute are continuing. About 5½ annas crop is harvested. Fodder is sufficient. Cattle-disease is reported from Mathabhanga police-station.
21	Dacca ..	1·07	9½	9½	Rainfall at North Sadar (Kapasia) 0·24. Weather seasonable Condition of standing crops is almost satisfactory. Ten annas crop is harvested. Fodder is insufficient.
	Manikganj ..	(*n*)	(*n*)	9	
	Narayanganj	0·17	8½	8½	
	Munshiganj ..	Nil	10	10	
22	Mymensingh ..	0·04	9	9	Weather seasonable Prospects of standing crops are fair Fodder is now available.
	Jamalpur ..	Nil	9½	9½	
	Tangail ..	0·40	9	9	
	Netrakona ..	1·82	10	10	
	Kishorganj ..	1 65	9	9	

(*n*) Not reported.

Serial No.	District and subdivision.	Rainfall.	Price of common rice, in seers, per rupee.		Character of the weather, condition of crops, etc.
			This week.	Previous week.	
1	2	3	4	5	6
		Inches.			
23	Faridpur ..	0·71	9½	9½	Weather seasonable. Its effects are not favourable. No import or export. Fodder insufficient. Water ample.
	Goalundo (Rajbari).	0·77	10½	9	
	Madaripur ..	0·50	9½	9	
	Gopalganj (*a*)	1·65	9	9	
24	Bakarganj (Barisal).	0·35	9½	9⅜	Weather seasonable. Fodder and water are sufficient.
	Pirojpur ..	(*n*)	(*n*)	9⅜	
	Patuakhali ..	2·42	8¾	9½	
	Dakshin Shabaspur (Bhola).	0·56	9	9	
25	Chittagong ..	0·69	10 11*	10 11½*	Weather seasonable. Prospects of standing crops fair. Transplantation of *aman* paddy crop continues. Cattle-disease is reported from Cox's Bazar subdivision. Fodder and water are sufficient. *Panga* salt sells at 16 seers per rupee at Sadar and at 13 seers per rupee at Cox's Bazar.
	Cox's Bazar ..	0·53	12	11	
26	Tippera (Comilla).	1·15	8	8	Prospects of crops are fair.
	Brahmanbaria	0·38	10	10	
	Chandpur ..	0·53	9½	9½	
27	Noakhali ..	4·31	9	10	Weather seasonable.
	Feni ..	0·53	11	12	
28	Chittagong Hill Tracts.	4·91	11	12	Weather seasonable.
29	Tripura State ..	0·68	8	8¾	Weather seasonable. Rinderpest exists at Sabroom. Cleansed cotton sells at Rs. 5 to Rs. 12⅝ per maund and jute at Rs. 3 to Rs. 5 per maund.

(*n*) Not reported. * Burma rice.

(*a*) The rainfall at Haridaspur, which is very near to Gopalganj, is not shown here.

DACCA, *the 5th September 1931.* J. C. ROY, for *Director of Agriculture, Bengal.*

Statement showing the daily gauge readings of certain rivers at the stations named below for the 21st August 1931.

Name of river and place where readings are taken.	Hour.	Reading on gauge.	Value of zero referred to P. W. D. datum.	Height above P. W. D. datum.	Compared with previous day's height.		Height above P. W. D. datum on same date in—	
					Rise.	Fall.	1930.	1929.
Ganges .. Monghyr ..	6 a.m. ..	124·00′	0·00′	124·00′	..	..	126·10′	124·50′
Ganges .. Rajmahal ..	6 „ ..	83·45′	0·00′	83·45′	..	..	85·30′	83·00′
Ganges .. Goalundo ..	8-24 „ ..	29·10′	1·409′	30·509′	..	..	26·009′	25·909′
Bhagirathi .. Swarupganj ..	8 a.m. ..	27·33′	0·00′	27·33′	..	..	27·20′	26·47′
Brahmaputra .. Dibrugarh ..	8 a.m. ..	30·90′	302·70′	333·60′	..	0·50′	335·50′	333·06′
Brahmaputra .. Gauhati ..	....	23·20′	136·958′	160·158′	..	..	158·058′	155·258′
Brahmaputra .. Serajganj ..	12-24 p.m. ..	40·60′	1·509′	42·109′	..	0·20′	39·309′	38·909′
Dhaleswari .. Sabhar ..	7 a.m. ..	24·20′	0·00′	24·20′	..	0·20′	20·10′	20·60′
Meghna .. Fenchuganj ..	7 a.m. ..	27·80′	1·509′	29·309′	..	0·15′	28·009′	29·259′
Meghna .. Bhairab Bazar ..	6-24 „ ..	20·17′	1·61′	21·78′	..	0·04′	19·78′	19·44′
Meghna .. Chandpur ..	11-9 „ ..	12·83′	1·61′	14·44′	..	0·17′	11·94′	12·61′
Lakhya .. Narayanganj ..	7 a.m. ..	25·67′	—5·59′	20·08′	..	..	16·24′	16·74′
Madaripur Bil Route .. Takerhat ..	....	16·05′	0·00′	16·05′	..	0·05′	12·25′	12·70′
Damodar .. Edilpur ..	6 a.m. ..	14·17′	92·58′	106·75′	..	..	99·41′	104·25′

Statement showing the daily gauge readings of certain rivers at the stations named below for the 22nd August 1931.

Name of river and place where readings are taken.	Hour.	Reading on gauge.	Value of zero referred to P.W.D. datum.	Height above P. W. D. datum.	Compared with previous day's height.		Height above P. W. D. datum on same date in—	
					Rise.	Fall.	1930.	1929.
Ganges .. Monghyr ..	6 a.m. ..	123·80′	0·00′	123·80′	..	0·20′	126·00′	125·00′
Ganges .. Rajmahal ..	6 „ ..	83·25′	0·00′	83·25′	..	0·20′	85·30′	83·20′
Ganges .. Goalundo ..	8-24 „ ..	28·60′	1·409′	30·009′	..	0·50′	26·109′	25·909′
Bhagirathi .. Swarupganj ..	6 p.m. ..	27·42′	0·00′	27·42′	0·09′	..	27·21′	26·19′
Brahmaputra .. Dibrugarh ..	8 a.m.	30·60′	302·70′	333·300′	..	0·30′	335·30′	332·86′
Brahmaputra .. Gauhati ..	....	22·70′	136·958′	159·658′	..	0·50′	158·258′	155·258′
Brahmaputra .. Serajganj ..	12-24 p.m. ..	40·30′	1·509′	41·809′	..	0·30′	39·609′	38·709′
Dhaleswari .. Sabhar ..	7 a.m. ..	24·10′	0·00′	24·10′	..	0·10′	20·20′	20·70′
Meghna .. Fenchuganj ..	7 a.m. ..	27·80′	1·509′	29·309′	..	0·15′	27·959′	29·509′
Meghna .. Bhairab Bazar ..	6-24 „ ..	20·17′	1·61′	21·78′	..	0·04′	19·78′	19·44′
Meghna .. Chandpur ..	11-59 „ ..	12·67′	1·61′	14·28′	..	0·17′	12·28′	12·61′
Lakhya .. Narayanganj ..	7 a.m. ..	25·33′	–5·59′	19·74′	..	0·34′	16·53′	..
Madaripur Bil Route .. Takerhat ..	10-24 a.m. ..	16·00′	0·00′	16·00′	..	0·05′	12·30′	12·80′
Damodar .. Edilpur ..	6 a.m. ..	11·92′	92·58′	104·50′	..	2·25′	99·08′	101·83′

Statement showing the daily gauge readings of certain rivers at the stations named below for the 23rd August 1931.

Name of river and place where readings are taken.	Hour.	Reading on gauge.	Value of zero referred to P. W. D. datum.	Height above P.W.D. datum.	Compared with previous day's height.		Height above P. W. D. datum on same date in—	
					Rise.	Fall.	1930.	1929.
Ganges .. Monghyr ..	6 a.m. ..	123·70′	0·00′	123·70′	..	0·10′	125·50′	120·20′
Ganges .. Rajmahal ..	6 „ ..	82·85′	0·00′	82·85′	..	0·40′	85·20′	83·60′
Ganges .. Goalundo ..	8-24 „ ..	28·40′	1·409′	29·809′	..	0·20′	26·209′	26·009′
Bhagirathi .. Swarupganj ..	6 p.m. ..	27·48′	0·00′	27·48′	0·06′	..	27·30′	25·90′
Brahmaputra .. Dibrugarh ..	8 a.m. ..	30·10′	302·70′	332·80′	..	0·50′	336·60′	332·66′
Brahmaputra .. Gauhati ..	....	22·30′	136·958′	159·258′	..	0·40′	158·358′	155·158′
Brahmaputra .. Serajganj ..	12-24 p.m. ..	40·10′	1·509′	41·609′	..	0·20′	39·609′	38·409′
Dhaleswari .. Sabhar ..	7 a.m. ..	23·90′	0·00′	23·90′	..	0·20′	20·30′	20·70′
Meghna .. Fenchuganj ..	7 a.m. ..	27·30′	1·509′	28·809′	..	0·30′	27·909′	29·559′
Meghna .. Bhairab Bazar ..	6-24 „ ..	19·75′	1·61′	21·36′	..	0·42′	19·78′	19·44′
Meghna .. Chandpur ..	12-44 p.m. ..	12·42′	1·61′	14·03′	..	0·25′	12·86′	13·36′
Lakhya .. Narayanganj ..	7 a.m. ..	25·17′	−5·59′	19·58′	..	0·16′	16·62′	17·49′
Madaripur Bil Route .. Takerhat ..	10-31 a.m. ..	15·85′	0·00′	15·85′	..	0·15′	12·55′	12·90′
Damodar .. Edilpur ..	6 a.m. ..	10·75′	92·58′	103·33′	..	1·17′	102·41′	100·58′

Statement showing the daily gauge readings of certain rivers at the stations named below for the 24th August 1931.

Name of river and place where readings are taken.	Hour.	Reading on gauge.	Value of zero referred to P. W. D. datum	Height above P. W. D. datum.	Compared with previous day's height		Height above P. W. D. datum on same date in—	
					Rise.	Fall	1930	1929.
Ganges .. Monghyr	6 a.m ..	124·60′	0·00	124 60′	0·90′	..	124·60′	125·20′
Ganges .. Rajmahal	6 „ ..	82·90′	0·00′	82·90′	0·05′	..	85·00	83·70′
Ganges .. Goalundo	8-24 „ ..	28·40′	1·409′	29·809′	Steady		26·409′	26·209′
Bhagirathi .. Swarupganj	7 a.m ..	27·40′	0·00′	27·40′	..	0·08′	27·31	25·84′
Brahmaputra .. Dibrugarh	8 a.m. ..	30·00′	302·70′	332·70′	..	0·10′	339·10′	332·46′
Brahmaputra .. Gauhati	.... ..	21·50′	136·958′	158·458′	..	0·80′	159·158′	154·358′
Brahmaputra .. Serajganj	12-24 p.m. ..	39·80	1·509	41·309	..	0·30′	39·609′	37·209′
Dhaleswari .. Sabhar	7 a.m. ..	23·60′	0·00′	23·60′	..	0·30′	20·40	20·80′
Meghna .. Fenchuganj	7 a m. ..	27·83	1·509′	28·609′	..	0·20′	27·859′	29·659′
Meghna .. Bhairab Bazar	6-24 „ ..	19·67′	1·61′	21·28	..	0·08′	20·03′	19·44′
Meghna .. Chandpur	1-29 p m. ..	12·33′	1·61′	13·94′	..	0·08′	13·11′	13·94′
Lakhya .. Narayanganj	7 a.m. ..	24·96	—5·59′	19·37′	..	0·21′	16·83′	17·53′
Madaripur Bil Route .. Takerhat	10-37 a m. ..	15·65′	0·00′	15·65′	..	0·20′	12·60′	13·20′
Damodar .. Edilpur	6 a.m. ..	9·08′	92·58′	101·66′	..	1·67′	101·91′	99·59′

Statement showing the daily gauge readings of certain rivers at the stations named below for the 25th August 1931.

Name of river and place where readings are taken.	Hour.	Reading on gauge.	Value of zero referred to P. W. D. datum.	Height above P. W. D. datum.	Compared with previous day's height.		Height above P. W. D. datum on same date in—	
					Rise.	Fall.	1930.	1929.
Ganges .. Monghyr ..	6 a.m. ..	125·00′	0·00′	125·00′	0·40′	..	123·80′	125·00′
Ganges .. Rajmahal ..	6 „ ..	83·25′	0·00′	83·25′	0·35′	..	84·50′	83·80′
Ganges .. Goalundo ..	8-24 „ ..	28·20′	1·409′	29·609′	..	0·20′	26·309′	26·209′
Bhagirathi .. Swarupganj ...	6 p.m. ..	27·29′	0·00′	27·29′	..	0·11′	27·74′	25·76′
Brahmaputra .. Dibrugarh ..	8 a.m. ..	30·50′	302·70′	333 20′	0·50′	..	338·10′	332·66′
Brahmaputra .. Gauhati ..	....	20·70′	136·958′	157 658′	..	0·80′	160·058′	153·958′
Brahmaputra .. Serajganj ..	12-24 p.m. ..	39·60′	1·509′	41·109′	..	0·29′	39·709′	38·009′
Dhaleswari .. Sabhar ..	7 a.m. ..	23·30′	0·00′	23·30′	..	0·30′	20·50′	20·80′
Meghna .. Fenchuganj ..	7 a.m. ..	27·83′	1·509′	28·609′	Steady.		27·809′	29·759′
Meghna .. Bhairab Bazar ..	6-24 „ ..	19·58′	1·61′	21·19′	..	0·08′	20·19′	19·36′
Meghna .. Chandpur ..	2-14 p.m. ..	12·42′	1·61′	14·03′	0·08′	..	13 44′	13·61′
Lakhya .. Narayanganj ..	7 a.m. ..	24·80′	−5·59′	19·21′	..	0·16′	17·03′	17·41′
Madaripur Bil Route .. Takerhat ..	2-24 p.m. ..	15·55′	0·00′	15·55′	..	0·10′	12·70′	13·50′
Damodar .. Edilpur ..	6 a.m. ..	7·42′	92·58′	100·00′	..	1·66′	100·41′	100·83′

Statement showing the daily gauge readings of certain rivers at the stations named below for the 26th August 1931.

Name of river and place where readings are taken.	Hour.	Reading on gauge.	Value of zero referred to P. W. D. datum.	Height above P. W. D. datum.	Compared with previous day's height.		Height above P. W. D. datum on same date in—	
					Rise.	Fall.	1930.	1929.
Ganges .. Monghyr ..	6 a.m.	124·60′	0·00′	124·60′	..	0·40′	123·00′	..
Ganges .. Rajmahal ..	6 „ ..	83·65′	0·00′	83·65′	0·40′	..	83·70′	83·80′
Ganges .. Goalundo ..	8-24 „ ..	28·00′	1·409′	29·409′	0·20′	..	26·409′	26·209′
Bhagirathi .. Swarupganj ..	7 a.m. ..	27·23′	0·00′	27·23′	..	0·06′	27·94′	25·75′
Brahmaputra .. Dibrugarh ..	8 a.m. ..	29·80′	302·70′	332·50′	..	0·70′	337·90′	333·36′
Brahmaputra .. Gauhati ..	....	20·40′	136·958′	157·358′	..	0·30′	160·258′	153·558′
Brahmaputra .. Serajganj ..	12-24 p.m.	39·30′	1·509′	40·809′	..	0·30′	..	37·809′
Dhaleswari .. Sabhar ..	7 a.m. ..	23·10′	0·00′	23·10′	..	0·20′	20·60′	20·70′
Meghna .. Fenchuganj ..	7 a.m. ..	27·00′	1·509′	28·509′	..	0·10′	27·759′	29·759′
Meghna .. Bhairab Bazar ..	6-24 „ ..	19·50′	1·61′	21·11′	..	0·08′	20·28′	19·28′
Meghna .. Chandpur ..	4-14 p.m. ..	12·42′	1·61′	14·03′	Steady.		13·44′	13·36′
Lakhya .. Narayanganj ..	7 a.m. ..	24·71′	−5·59′	19·12′	..	0·09′	17·24′	17·12′
Madaripur Bil Route .. Takerhat ..	2-45 p.m. ..	15·35′	0·00′	15·35′	..	0·20′	13·00′	13·50′
Damodar .. Edilpur ..	6 a.m. ..	6·58′	92·58′	99·16′	..	0·84′	99·58′	104·83

Statement showing the daily gauge readings of certain rivers at the stations named below for the 27th August 1931.

Name of river and place where readings are taken.	Hour.	Reading on gauge.	Value of zero referred to P. W. D. datum.	Height above P. W. D. datum.	Compared with Previous day's height.		Height above P. W. D. datum on same date in—	
					Rise.	Fall.	1930.	1929.
Ganges .. Monghyr	6 a.m. ..	123·40′	0·00′	123·40′	..	1·20′	122·60′	124·00′
Ganges .. Rajmahal	6 „ ..	83·60′	0·00′	83·60′	..	0·05′	83·80′	83·60′
Ganges .. Goalundo	8-24 „ ..	27·80′	1·409′	29·209′	..	0·20′	26·409′	26·009′
Bhagirathi .. Swarupganj	8 a.m. ..	27·22′	0·00′	27·22′	..	0·01′	28·03′	25·86′
Brahmaputra .. Dibrugarh	8 a.m. ..	29·60′	302·70′	332·30′	..	0·20′	338·60′	333·86′
Brahmaputra .. Gauhati	....	19·90′	136·958′	156·858′	..	0·50′	160·658′	152·958′
Brahmaputra .. Serajganj	12-24 p.m. ..	39·00′	1·509′	40·509′	..	0·30′	40·209′	37·609′
Dhaleswari .. Sabhar	7 a.m. ..	22·80′	0·00′	22·80′	..	0·30′	20·70′	20·60′
Meghna .. Fenchuganj	7 a.m. ..	26·80′	1·509′	28·309′	..	0·20′	27·709′	29·609′
Meghna .. Bhairab Bazar	6-24 „ ..	19·42′	1·61′	21·03′	..	0·08′	20·32′	19·19′
Meghna .. Chandpur	5-24 „ ..	12·17′	1·61′	13·78′	..	0·25′	13·53′	13·19′
Lakhya .. Narayanganj	7 a.m. ..	24·58′	−5·59′	18·99′	..	0·13′	17·41′	16·78′
Madaripur Bil Route .. Takerhat	2-51 p.m. ..	15·20′	0·00′	15·20′	..	0·15′	13·15′	13·35′
Damodar .. Edilpur	6 a.m. ..	6·00′	92·58′	98·58′	..	0·58′	98·91′	103·41′

Statement of weekly gauge readings on the river Ganges at Rampur Boalia for the week ending the 29th August 1931.

Date.	Hour.	Height of surface above zero of gauge.	Height of surface above P.W.D. datum.	Height of surface above P. W. D. datum on the same date last year.	Remarks.
1931.					
23rd August ..	7 a.m.	....	60·00	60·30	The value of zero of gauge =0·00 P. W. D.
24th „ ..	7 „	....	59·80	60·40	
25th „ ..	7 „	....	59·75	60·20	
26th „ ..	7 „	....	60·00	59·75	Zero of gauge referred to B. M. on Rajshahi College step; value 64·73.
27th „ ..	7 „	....	60·10	59·30	
28th „ ..	7 „	....	59·95	58·90	
29th „ ..	7 „	....	59·25	58·35	

Highest recorded level on 26-8-1879=64·24.
Lowest recorded level on 25-4-1884=32·62.

P. C. BASU, *Subdivisional officer,*
Irrigation Department, Rajshahi.

RAMPUR BOALIA, *the 29th August 1931.*

FINAL FORECAST OF THE JUTE CROP, 1931.

Consolidated statement for Bengal, Bihar and Orissa and Assam.

Area.—The revised estimated area for the three provinces is 1,858,100 acres, a decrease of 1,634,200 acres as compared with the revised final forecast for 1930. The decrease as compared with the acreage in the Preliminary Forecast for 1931 is due to reduction after revision in the Bengal and Assam estimates.

Yield.—It is estimated that this crop will yield 5,559,900 bales of jute, reducing last year's total (revised) by 5,694,900 bales.

The consolidated returns are as follows:—

Province.	Area in acres.			Yield in bales.		
	1930.	1931.	Difference.	1930.	1931.	Difference.
Bengal (including Cooch Behar and Tripura States).	3,062,300	1,613,700*	—1,448,600	9,966,000	5,002,700	—4,963,300
Bihar and Orissa ..	238,000	148,800	—89,200	670,000†	367,200†	—302,800
Assam	192,000*	95,600*	—96,400	618,800*	190,000	—428,800
Total ..	3,492,300*	1,858,100*	—1,634,200	11,254,800*	5,559,900	—5,694,900

* Revised. † Including Nepal.

The Departmental Final Forecasts for the three provinces are appended.

ROBERT S. FINLOW,
Director of Agriculture, Bengal.

CAMP CALCUTTA,
The 9th September 1931.

APPENDIX.

Abstract statement of estimated acreage and outturn of the jute crop, 1931.

(For Bengal, Bihar and Orissa and Assam consolidated.)

Acreage								Outturn in bales							
Of current year's crop	Of previous year's crop	Average of five preceding years (viz., 1925—1929)	Average of ten preceding years (viz., 1920—1929)	Percentage by which column 1 exceeds (+) or falls short of (−) area in			Estimated yield of current year	Yield of previous year according to—		Average of five preceding years (viz., 1925—1929)	Average of ten preceding years (viz., 1920—1929)	Percentage by which column 8 exceeds (+) or falls short of (−) outturn in—			
				Column 2	Column 3	Column 4		Crop forecast	Trade statistics			Column 9(a)	Column 9(b)	Column 10	Column 11
1	2	3	4	5	6	7	8	9(a)	9(b)	10	11	12	13	14	15
1,858,100*	1,492,400*	3,379,100	2,828,000	−46·8	−45	34·4	5,550,000	11,254,800*	9,659,746	10,353,400	8,391,700	−50·6	−42·4	−46·3	−33·9

*Revised

DEPARTMENT OF AGRICULTURE, BENGAL.

Final Forecast of the Jute Crop of Bengal, 1931.

[NOTE.—On an average of the five years ending 1929-30, the area under jute in Bengal, to which this forecast relates, represents some 86·3 per cent. of the total area under jute in British India.]

Season.—Sowings were carried out in favourable circumstances generally. Afterwards excessive rain in May did damage in Netrakona and Kishoreganj subdivisions of Mymensingh. Elsewhere conditions remained suitable and the crop made good progress. In the end of July the Brahmaputra came down in record flood and did some damage in riparian areas. Little serious outright loss appears to have taken place, except in the *bhil* tract in Pabna; but some damage also took place in Bogra, and to a smaller extent in Faridpur, Dacca and Mymensingh.

The river has now receded to normal.

Condition of the crop.—Except in the tracts mentioned, the crop is well grown. Owing to rise and fall of water in the flood areas, increased root and poor quality may result.

Area of the crop.—The area under jute is 1,613,700 acres as compared with 3,062,300 acres in 1930.

Outturn.—As in previous years, the percentage figures are calculated on the basis of divisional normals which remain as follows:—

	Bales per acre.
Dacca and Chittagong Divisions	... 3·7
Rajshahi Division	... 3·5
Presidency and Burdwan Divisions	... 3·2

The total outturn of the crop is estimated at 5,002,700 bales as compared with 9,966,000 bales last year.

ROBERT S. FINLOW,
Director of Agriculture, Bengal.

CAMP CALCUTTA,
The 9th September 1931.

APPENDIX I.

Final forecast of the jute crop of Bengal, 1931.

District.	Estimated area under jute, in acres.		Estimated outturn as a percentage of the normal yield per unit of area.		Estimated total yield, in bales of 400 lbs.		Date by which harvesting generally commenced and whether that date was early, normal or late.	Remarks by District Officers
	Last year.	This year.	Last year.	This year.	Last year.	This year.		
1	2	3	4	5	6	7	8	9
	Acres.	Acres			Bales.	Bales.		
24-Parganas ..	60,000	45,000	98·75	100	218,000	144,000	Middle of August ..	The decrease in area is due to low prices and to propaganda against jute cultivation
Nadia ..	56,000	30,000	74	100	133,000	96,000	August in Ranaghat and Kushtia. Elsewhere not yet begun.	The present condition of the crop is good.
Murshidabad ..	33,000	14,000	65 8	100	69,000	44,000	Not yet begun ..	The condition of the crop s satisfactory.
Jessore ..	103,000	40,000	101 9	100	336,000	147,000	Middle of August ..	The condition of the crop is normal.
Khulna ..	35,000	21,000	100·2	101	119,000	68,000	Middle of August in respect of capsularis	
Burdwan ..	3,000	2,000	93·7	93·7	9,000	6,000	End of August. Normal.	The condition of the crop is satisfactory
Midnapore ..	8,000	4,000	94	100	24,000	13,000	Will commence in the beginning of September.	
Hooghly ..	29,000	20,000	96	107·8	89,000	69,000	End of August Late.	Weather conditions were favourable. The condition of the crop is very satisfactory.
Howrah ..	7,000	4,000	93 7	100	21,000	13,000	End of August. Late.	The condition of the crop is normal.
Rajshahi ..	85,000	68,000	78 5	92 9	231,000	221,000	Latter part of July. Normal.	Slight damage has been done by flood in the *bâil* tract in Natore subdivision and to a less extent in Naogaon subdivision. Apart from this, the crop is excellent
Dinajpur ..	73,000	41,000	97·7	91·42	250,000	131,000	By the first week of August. A little late.	
Jalpaiguri ..	42,000	20,000	85·7	78·9	126,000	72,000	First week of August	There has been slight damage owing to heavy rains at the time of weeding.
Darjeeling ..	4,000	2,000	92 9	93	13,000	6,500	August. Normal ..	The crop is satisfactory.
Rangpur ..	320,000	180,000	94 3	99 14	1,056,000	626,000	July to latter part of August	Excepting in the flooded tract where slight damage has occurred, the crop is exceptionally well grown.
Bogra ..	103,000	60,000	92	80 8	332,000	170,000	Middle of July. Normal.	Excepting in the flooded tracts, where small damage has taken place, the crop is satisfactory.
Pabna ..	155,000	45,400*	85 7	74·3	465,000	118,000	July ..	Considerable damage s reported in the *bâil* tract in the Sirajganj subdivision. In the highland tract the crop is good.
Malda ..	38,000	16,000	37·7	98·3	50,000	55,000	....	
Dacca ..	378,000	215,000	94·6	86·5	1,323,000	688,000	....	Flood has damaged the crop to some extent in riparian areas.
Mymensingh ..	749,000	415,000	90 3	81·08	2,500,000	1,245,000	....	Owing to excessive rain in May some damage has been caused to crops in the Netrakona and Kishoreganj subdivisions. Damage due to flood up to one and a half annas has also occurred in the riparian tracts.
Faridpur ..	314,000	144,000	95	79·2	1,099,000	422,000	....	Weather condition s favourable on the whole, excepting in *bâil* tracts. Slight damage has also been caused by flood in riparian tracts.
Bakarganj ..	52,000	30,000*	100·8	92·7	194,000	103,000	....	The crop is satisfactory.
Chittagong ..	300	300	89·2	108	1,000	1,200	....	

*Revised.

District.	Estimated area under jute, in acres.		Estimated return as a percentage of the normal yield per unit of area.		Estimated total yield, in bales of 400 lbs.		Date by which har vesting generally commenced and whether that date was early, normal or late.	Remarks by District Officers
	Last year.	This year.	Last year.	This year.	Last year.	This year.		
1	2	3	4	5	6	7	8	9
	Acres.	Acres.			Bales.	Bales.		
Tippera ..	308,000	140,000	88·1	83·8	1,004,000	438,000	.. ..	The reduction in area is due to the heavy fall in the market price. The crop is not first class because rain was irregular; insufficient at the time of sowing and heavy later on.
[illegible]naili ..	64,000	28,000	92·2	83	218,000	80,000		The decrease in area is due to low price of jute and to propaganda for restriction of jute cultivation and the fall in the percentage of outturn is due to floods.
Total for Bengal	3,028,300	1,596,700	..	..	9,883,000	4,082,700		
Cooch Behar ..	31,000	16,000	73·7	30	80,000	17,000		Decrease in area is due to the abnormally low price of jute last year. Decrease in yield is due to unseasonable rain at sowing and weeding time.
Tripura State ..	3,000	1,000	..	81	3,000	3,000		Decrease in area is due to unfavourable sale price of jute last year, together with a State tax on export. Rainfall is irregular this year. Crop is not very good.
Grand Total ..	3,062,300	1,613,700	..	..	9,966,000	5,002 700		

APPENDIX II.

Statement showing the rainfall (in inches) in July and August each year from 1928 to 1931.

District.	Rainfall in July.					Rainfall in August.				
	1928.	1929.	1930.	1931.	Normal.	1928.	1929.	1930.	1931†.	Normal.
	Inches.	Inches.	Inches.	Inches.	Inches.	Inches.	Inches.	Inches.	Inches.	Inches.
24 Parganas	19 52	14 25	18·42	17·10	13·06	18·15	10·79	13·63	8 77	12·63
Nadia	12·70	13·87	16 80	10·81	9 97	13·39	6·21	15·64	12 99	10·19
Murshidabad	12 95	7 52	16·38	12·76	10·81	8·97	6 43	9 31	3·54	11 16
Jessore	14·81	14 18	16·00	16 04	11 08	9·07	8 63	18 53	7·55	10 75
Khulna	19·94	18·85	19·13	15·70	14·77	14 60	11·25	13·26	18·48	13·12
Burdwan	16·66	14 94	16 11	14·64	11·00	9·06	9 84	11 81	16·17	11·62
Midnapore	20·55	17·89	15·45	12·97	11·54	15·97	15·38	11·34	6·73	11·42
Hooghly	17·49	13 46	21·06	13 24	11·84	16·78	8·87	11 40	14·09	11·41
Howrah	18·70	13·95	23·77	14·04	12 59	21·31	15·67	9 00	9·81	12·13
Rajshahi .. .	18·31	10·96	14·71	12·08	11 02	18·88	6·00	9 26	11·56	10·75
Dinajpur	18·87	11·09	11·14	19·57	16·21	15·52	7·81	16·04	6 62	14·62
Jalpaiguri	36·15	30·53	11·42	38·21	34·81	32·95	20·06	20 26	29·54	28·23
Darjeeling .. .	29·98	28·77	25·16	39·50	31·45	25·12	26 14	27·29	16·36	25·84
Rangpur	22·92	12 16	9·69	24 32	15·25	16·10	7·33	20 51	11 55	13 48
Bogra	15·49	9·82	11 71	16·83	12·07	10·86	6·20	9·38	14 60	11·54
Pabna	12·63	10·52	16·82	12·71	10·57	13·09	6·82	14 24	11·00	11·23
Malda	15·36	14·63	14·74	16·09	12·10	15·36	11·07	11·79	3·90	11·58
Dacca	11·50	10·72	14·89	13·75	13·27	15·54	10·15	12·26	11·29	12·78
Mymensingh	14 94	10·48	13·48	20·74	16·70	15 18	13·44	12·57	11·20	17·09
Faridpur	14·07	13·75	17·59	13·54	12·85	10·62	9·67	16·91	8·76	12·98
Bakarganj	20·33	25·46	29 12	25·27	18·41	12·21	21·36	17·70	18 07	16·64
Chittagong	19·27	26·34	32·86	37·80	26·42	20·27	11·92	19·84	15·79	23·18
Tippera	17·87	12·89	11 14	18·37	13·75	16·63	13·03	11·86	9·65	14·90
Noakhali	24·88	18 09	23 79	27·18	23·55	20·10	16·58	16 39	15·58	23·48
Cooch Behar	34·59	23·39	9·84	41·53	25·46	30·32	9·82	17 93	13·15	21·28
Tripura State	12·55	8·82	10·41	14·97	12·10	17·31	15·40	(*)	7·65	11·79

NOTE.—The figures given above are the averages for all the rain registering stations in each district

(*) Not reported.

† Relates to headquarters stations only.

DEPARTMENT OF AGRICULTURE, BIHAR AND ORISSA.

Final Forecast of the Jute Crop of Bihar and Orissa, 1931.

[NOTE.—On an average of the five years ending 1929-30, the area under jute, to which the Bihar and Orissa forecast relates, represents about 7·6 per cent. of the total area under jute in British India.]

Acreage.—The final district returns of the eight jute-growing districts of the province show an area under jute of 147,500 acres. But these estimates have proved to be very low, and I have no reason to alter the estimate made in the preliminary forecast, viz., 148,800 acres. Last year's estimate of the area under the crop was 238,000 acres.

Weather conditions.—In March light showers fell in the jute districts. The fall was above the normal in Champaran, Darbhanga, Bhagalpur, the Santal Parganas, Balasore, normal in Purnea, and below the normal in the remaining two jute districts. In April and May light rain fell in all the jute districts. The fall was below the normal everywhere. In June rain fell in all the jute districts. The fall was below the normal everywhere. In July rain fell in all the districts. The fall was above the normal in Champaran, Muzaffarpur, Darbhanga, Bhagalpur, Purnea and the Santal Parganas, and below the normal in the remaining two jute districts. In August rain fell in all the districts; the fall during the first fortnight was light to moderate, but during the later period it was heavy in Cuttack and Balasore and light to moderate elsewhere. The weather conditions are reported to have not been favourable in the most important jute district of Purnea and also in Balasore, Darbhanga and the Santal Parganas and fair in the remaining jute districts.

Outturn.—In the important jute districts of Purnea and Cuttack the outturn of the crop has been estimated at 50 and 82 per cent. of the normal respectively. Champaran reports a normal crop, i.e., 100 per cent., Muzaffarpur. Darbhanga, Bhagalpur, the Santal Parganas and Balasore report 75, 68, 60, 65 and 60 per cent., respectively.

On the basis of the area and percentage outturn reported by the District Officers the average condition of this year's crop for the province comes to 55 per cent. against 58 per cent. last year. But in my opinion, this is an underestimate, and the condition factor will not be less than 60 per cent. of the normal. Recent enquiries about the normal outturn per acre show that the normal outturn per acre is $3\frac{1}{3}$ bales, and on this basis the gross outturn on 148,800 acres estimated to be under jute in this province comes to 342,200 bales against 620,000 bales last year. The import of jute from Nepal estimated at 25,000 bales brings the total of the province to 367,200 bales.

G. S. HENDERSON,

Director of Agriculture, Bihar and Orissa.

CAMP RANCHI,

The 28th August 1931.

APPENDIX I.

Final forecast of the jute crop of Bihar and Orissa for 1931.

Division	District	Total area of the district	Estimated total area under cultivation.	Estimated normal area under jute (The figure has been arrived at by taking the average of ten years immediately preceding the year to which this forecast relates.)	Estimated area under jute		Estimated outturn as a percentage of normal yield per unit of area		Estimated total yield.		Date by which harvesting generally commenced and whether that date was early, normal or late.	Remarks by District Officers
					Last year, 1930	This year, 1931.	Last year, 1930	This year, 1931	Last year, 1930.	This year, 1931		
1	2	3	4	5	6	7	8	9	10	11	12	13
		Acres	Acres	Acres	Acres	Acres			Bales.	Bales.		
Tirhut ..	Champaran ..	2,263,194	1,430,200	2,700	7,676	2,500	100	100	25,561	7,500	Not yet commenced ..	The weather and rainfall have been favourable for the growth of the crop A normal outturn is expected. No change in area since the submission of the preliminary forecast.
	Muzaffarpur ..	1,934,630	1,627,000	2,500	4,000	4,000	75	75	9,990	9,000	Not yet begun .	The condition of the crop is good.
	Darbhanga ..	2,142.720	1.677,800	1,600	1,236	312	75	68	3,086	636	By middle of September	The weather and rainfall have not been favourable. The prospect of the crop is fair in Samastipur and Madhubani subdivisions The decrease in area shown in column 7 as compared with that of the first forecast is due to the fact that the entire area (909) acres under jute cultivation in Sadar subdivision has been damaged by floods.
Bhagalpur ..	Bhagalpur ..	2,661,120	1,684,100	2,600	4,305	2,075	81	60	11,623	3,735	August (normal) ..	The decrease in area sown is due to fall in prices of jute
	Purnea ..	3,196,160	1,694,400	175,400	140,000	120,000	50	50	233,100	199,800	End of July (late) ..	The weather and rainfall were not favourable for the growth of the crop. The sowing was late at places for want of timely rainfall while at others it was normal where the crop was sown in low lands. The decrease in area under the crop is due to slump in jute and want of timely rains The recent rains benefited the crop and consequently the outturn is expected to be the same as last year. The harvesting, steeping and washing of jute are in progress.
	Santal Parganas ..	3,500,800	1,717,900	1,000	750	500	60	65	1,500	975	Not yet commenced (late)	The climatic condition having been not very favourable at the outset, the outturn is expected to be fair.
Orissa ..	Cuttack ..	2,338,560	1,223 500	17,900	18,200	15,700	91	82	55,151	38,622	Second week of August (normal)	The increase in area as compared with first forecast is due to the fact that sowing was not completed when the forecast was submitted.
	Balasore ..	1,234,400	932,200	2 600	2,800	2 400	80	60	7,459	4,320	Not yet begun ..	The area sown in the first forecast has been reduced owing to low price of jute and late rainfall in the district as sowings could not be made at places. The general prospect is fair
	Total ..	19,371,584	11,987,100	206,300	(a) 178,967 or in round numbers 179,000	(b) 147,487 or in round numbers 147,500	58	55	(c) 847,470	(d) 264 588		

(a) Revised to 238,000 acres (b) Revised to 146,600 acres. (c) Revised to 620,000 bales (d) Revised to 242.200 bales.

APPENDIX II.

Abstract statement of estimated acreage and outturn of the jute crop, 1931.

Province.	Acreage.							Outturn in bales of 400 lbs.							
	Of current year's crop.	Of previous year's crop.	Average of five preceding years (viz., 1925—1929).	Average of ten preceding years (viz., 1920—1929).	Percentage by which column 2 exceeds (+) or falls short of (−) area in—			Estimated yield of current year.	Yield of previous year.		Average of five preceding years (viz., 1925—1929).	Average of ten preceding years (viz., 1920—1929).	Percentage by which column 9 exceeds (+) or falls short of (−) outturn in—			
					Column 3.	Column 4.	Column 5.		Crop forecast.	Trade statistics.			Column 10.	Column 11.	Column 12.	Column 13.
1	2	3	4	5	6	7	8	9	10	11	12	13	14	15	16	17
Bihar and Orissa	148,800	238,000	257,200	220,300	−37·48	−42·15	−33·25	* 367,200	* 670,000	..	706,500	545,300	−45·19	..	−48·03	−32·66

*Including Nepal.

APPENDIX III.

Name of district.	Rainfall in July.				Rainfall in August.				Normal rainfall.	
	1928.	1929.	1930.	1931.	1928.	1929.	1930.	1931.*	July.	August.
1	2	3	4	5	6	7	8	9	10	11
	Inches.	Inches.	Inches.	Inches.	Inches.	Inches.	Inches.	Inches.	Inches.	Inches.
Champaran	20·50	10·80	10·99	22·15	13·55	11·76	5·64	3·69	14·47	13·85
Muzaffarpur	14·65	10·81	8·93	18·01	15·15	10·18	5·56	2·80	11·77	11·89
Darbhanga	15·80	10·55	9·45	21·79	16·13	8·89	11·46	1·74	12·22	12·55
Bhagalpur	16·11	14·22	11·37	20·21	13·08	8·06	9·09	4·48	12·24	11·71
Purnea	18·36	13·08	9·86	20·16	13·08	7·51	11·25	12·37	16·90	14·97
Santal Parganas	15·52	12·61	15·10	16·48	9·54	10·71	9·11	9·59	12·69	12·00
Cuttack	18·31	14·72	12·58	9·25	13·86	15·89	9·53	6·18	12·20	12·08
Balasore	17·26	15·24	12·25	9·63	13·66	13·34	9·87	6·75	11·18	11·51

*Figures relate to headquarters stations only up to 17th August.

DEPARTMENT OF AGRICULTURE, ASSAM.

Final Forecast of Jute Crop of Assam, 1931.

[NOTE.—On the average of the five years ending 1929-30, the area under jute in Assam represents 5·0 per cent. of the total area under jute in British India.]

Season.—As already stated in the preliminary forecast, the weather in the beginning of the season was generally unfavourable for the cultivation and growth of the crop. The conditions somewhat improved later on, but on the whole the general effect of the season has been unfavourable to the crop. Some damage by flood has been reported from the Assam Valley districts, while in Sylhet incessant rain after sowing caused considerable areas of the crop to be abandoned.

2. Area.—As estimated by the Deputy Commissioners, the area under jute is 95,600 acres compared with last year's actual of 192,000 acres, and this year's preliminary forecast of 100,500 acres. Area reported in the preliminary forecast has been revised in four districts.

3. Outturn.—The outturn has been estimated to be 57 per cent. of the normal per acre, against 72 per cent. (revised) of last year. Taking 3·5 bales of 400 lbs. each of jute fibre as the normal yield per acre, the total produce of the crop in this province this year comes to 189,900 bales against 618,800 bales (revised) of last year, or a decrease of 69 per cent.

A. G. BIRT,

Director of Agriculture, Assam.

SHILLONG,

The 27th August 1931.

APPENDIX I.

Final forecast of the jute crop of Assam, 1931.

Districts.	Estimated normal area under jute.	Estimated area under jute.		Estimated outturn as a percentage of the normal yield per unit of area.		Estimated total yield in bales of 400 lbs. each.		Date by which the harvesting of the crop was commenced this year and whether that date was early, normal or late.	Remarks by Deputy Commissioners.
		Last year (actual).	This year.	Last year.	This year.	Last year.*	This year.		
1	2	3	4	5	6	7	8	9	10
	Acres.	Acres.	Acres.			Bales.	Bales.		
Cachar ..	300	200	200	65	60	500	400	Middle of August. Normal.	The weather was not favourable in the beginning of the season owing to incessant rainfall but it improved later. Insects also caused some damage to the crop.
Sylhet ..	20,000	19,800	5,000	54	38	37,400	6,600	July. Normal ..	The large decrease in area is due to the abnormally low price of jute last year. The area reported in the preliminary forecast has been greatly reduced, much of the area sown having been subsequently abandoned owing to unfavourable weather which is also responsible for the low estimated outturn.
Goalpara ..	60,000	(a) 63,300	35,200	100	45	221,500	55,600	End of July. Late.	The decrease in area is due partly to unfavourable weather and partly to the low price of jute. The weather on the whole has been unfavourable for the crop which has also been damaged by floods in low-lying areas. Hailstorms also caused some damage.
Kamrup ..	15,000	27,100	15,000	90	54	85,400	28,300	First week of August. Normal.	Unfavourable weather at the sowing time and the unusually low price of jute account for the decrease in area. The weather was generally unfavourable throughout the season for the cultivation and growth of the crop. Floods also did some damage.
Darrang ..	12,600	18,600	13,700	95	75	61,900	36,000	July. Early ..	The low price of jute and unfavourable weather in the beginning of the season are responsible for the decrease in area. The weather from June to middle of July was favourable but heavy rains and the flood in the latter part of July caused some damage to the crop in low-lying areas.
Nowgong ..	40,000	56,600	20,400	95	65	188,200	46,400	Beginning of July. Early.	The decrease in area is due to the extremely low price of jute. The weather has not been generally favourable during the season, and in the last part of July the crop was damaged by floods. Insects also caused some damage.
Sibsagar ..	300	400	300	100	80	1,400	800	Middle of August. Normal.	The decrease in area is due to unfavourable weather at sowing time. Weather subsequently became more favourable, but some damage by flood is reported.
Lakhimpur ..	200	1,100	900	88	75	5,800	2,400	August. Normal	The decrease in area is due to the low price of jute. The weather on the whole was favourable but flood has caused some damage to the crop.
Garo Hills (plains)	3,300	4,900	4,800	90	80	15,700	13,400	Middle of July. Normal.	The decrease in area is due to dullness of the jute market. The weather was generally favourable for the crop.
Total	151,700	192,000	95,600	72†	57	618,800	189,900		

(a) The area has been revised by the Deputy Commissioner after the issue of the preliminary forecast.

*On the basis of the actual areas.

†Revised on the basis of the actual area.

APPENDIX II.

Abstract statement of estimated acreage and outturn of the jute crop, 1931.

Province.	Acreage.							Outturn in bales of 400 lbs. each.						
	Of current year's crop.	Of previous year's crop.	Average of five preceding years (viz., 1925—1929).	Average of ten preceding years (viz., 1920—1929).	Percentage by which column 2 exceeds (+) or falls short of (−) area in—			Estimated yield of current year.	Yield of previous year according to crop statistics.*	Average yield of five preceding years (viz., 1925—1929).	Average yield of ten preceding years (viz., 1920—1929).	Percentage by which column 9 exceeds (+) or falls short of (−) outturn in—		
					Column 3.	Column 4.	Column 5.					Column 10.	Column 11.	Column 12.
1	2	3	4	5	6	7	8	9	10	11	12	13	14	15
Assam ..	95,600*	192,000*	168,000	135,100	−50	−43	−29	189,900	618,800*	315,000	364,600	−69	−39	−48

*On the basis of the actual area.

APPENDIX III.

Statement of rainfall in July and August, 1928-1931.

District.	Rainfall in July.				Rainfall in August.			
	1928.	1929.	1930.	1931.	1928.	1929.	1930.	1931.*
1	2	3	4	5	6	7	8	9
	Inches.	Inches.	Inches.	Inches.	Inches.	Inches.	Inches.	Inches.
Cachar	17·11	11·51	14·82	22·76	23·66	18·72	14·66	6·96
Sylhet	16·45	12·90	12·75	16·43	21·53	21·87	14·54	8·04
Goalpara	27·11	17·80	8·64	28·47	26·19	9·01	18·25	5·05
Kamrup	10·59	12·27	11·03	26·95	15·60	10·77	16·17	9·63
Darrang	9·08	14·40	11·66	21·35	11·58	12·47	14·21	4·77
Nowgong	9·96	10·13	15·32	18·87	10·80	8·77	13·10	12·99
Sibsagar	12·83	28·67	9·23	16·61	15·23	11·18	16·42	9·64
Lakhimpur	18·27	20·69	13·76	27·03	20·78	15·19	23·03	11·45
Garo Hills (plains)	25·13	11·40	12·42	35·55	13·64	13·67	20·20	13·66

*The figures for August 1931 are only approximate and represent he rainfall up to 21st only being taken from weather and crop report.

Printed at the Bengal Government Press, Alipore, and published by the Bengal Secretariat Book Depot, Writers' Buildings, in the City of Calcutta, on the 10th September 1931.

Registered No. C207 *No. 38 of 1931*

The Calcutta Gazette

THURSDAY, SEPTEMBER 17, 1931.

CONTENTS:

	PAGE.
PART I.—Orders and Notifications by the Governor of Bengal, the Government of Bengal, the High Court, Government Treasury, etc.	1093—1136
PART IA.—Orders and Notifications by the Government of India republished for general information	239—274
PART IB.—Educational Notices ..	901—913
PART II.—Advertisements	861—879
PART III.—Acts of the Bengal Legislative Council	*Nil*
PART IV.—Bills introduced in the Bengal Legislative Council, Reports of Select Committees presented or to be presented to that Council, and Bills published before introduction in that Council ..	*Nil*
PART V.—Acts of the Indian Legislature assented to by the Governor General and Ordinances promulgated under section 72 of the Government of India Act ..	*Nil*
PART VI.—Bills introduced in the Council of State and Legislative Assembly, Reports of Select Committees presented to the Council and Assembly and Bills published under Rule 18 of the Indian Legislative Rules	*Nil*
SUPPLEMENT No. 38—	
Cotton Ginning and Pressing—River water-levels—Return of Vital Statistics—Weekly Vital Statistics—Irrigation area leased—Weekly Weather and Crop Report—Prices current—Daily gauge-readings—Weekly gauge-readings—Corporation of Calcutta Notice	1175—1202
Abstract of audited accounts of the University of Dacca for 1928-29 and 1929-30	1203—1204

Part I

Orders and Notifications by the Governor of Bengal, the Government of Bengal, the High Court, Government Treasury, etc.

ORDERS BY THE GOVERNMENT OF BENGAL.

No. 8259A.

Appointments and Transfers.

GENERAL.

Birbhum.—No. 1372A.D.—7th September 1931.—Khan Sahib Muhammad Raziuddin Ali, Deputy Magistrate and Deputy Collector, Birbhum, is appointed temporarily to have charge of the Sadar subdivision of that district.

Mymensingh-Dacca Divn.—No. 1375A.D.—7th September 1931.—Mr. Harold Graham, I.C.S., Magistrate and Collector, Mymensingh, is appointed temporarily to act as Commissioner of the Dacca Division.

Mymensingh.—No. 1378A.D.—7th September 1931.—Mr. Suresh Chandra Ghatak, Additional District Magistrate, Mymensingh, is appointed temporarily to be Magistrate and Collector of that district.

Birbhum-Mymensingh.— No. 1380A.D.— 7th September 1931.—In exercise of the powers conferred by sub-section (*2*) of section 10 of the Code of Criminal Procedure, 1898 (Act V of 1898), the Governor in Council is pleased to appoint Babu Srimanta Kumar Das Gupta, M.B.E., Deputy Magistrate and Deputy Collector, Birbhum, to act temporarily as Additional District Magistrate, Mymensingh, and to direct that he shall have, during the period he is so employed, all the powers of a District Magistrate under the said Code and under all other laws in force in that district.

Birbhum. — No. 1385A.D. — 7th September 1931.—Babu Kumaresh Ray, Deputy Magistrate and Deputy Collector, on leave, is posted to the headquarters station of the Birbhum district.

Jalpaiguri - Bakarganj. — No. 1388A.D.— 7th September 1931.—Mr. R. L. Walker, I.C.S., officiating Deputy Commissioner, Jalpaiguri, is appointed temporarily to act as Magistrate and Collector, Bakarganj.

Jalpaiguri.—No. 1392A.D. — 7th September 1931.—Babu Chittaranjan Mukharji, Deputy Magistrate and Deputy Collector, Jalpaiguri, is appointed temporarily to act as Deputy Commissioner of that district.

Jalpaiguri.—No. 1394A.D. — 7th September 1931.—Babu Bishnupada Bhattacharji, Deputy Magistrate and Deputy Collector, Jalpaiguri, is appointed temporarily to have charge of the Sadar subdivision of that district.

Malda-Calcutta.—No. 1417A.D.—8th September 1931.—Mr. N. V. H. Symons, I.C.S., officiating Magistrate and Collector, Malda, is appointed to act, until further orders, as Secretary to the Board of Revenue, Bengal.

Dacca-Malda.—No. 1422A.D. — 8th September 1931.—Rai Rebati Mohan Chakrabatti Bahadur, Additional District Magistrate, Dacca, is appointed to be Magistrate and Collector, Malda.

24-Parganas.—No. 1426A.D.—9th September 1931.—The Hon'ble Mr. Justice D. C. Patterson, I.C.S., is appointed temporarily to be Additional District and Sessions Judge of the 24-Parganas.

Burdwan Divn.—No. 8115A.—9th September 1931.—Babu Sharat Chandra Guha, Sub-Deputy Collector, on leave, is posted to the Burdwan Division.

Rajshahi Divn.—No. 8118A.—9th September 1931.—Babu Saileswar Sinha Ray, Sub-Deputy Collector, on leave, is posted to the Rajshahi Division.

Dacca Divn.—No. 8121A.—9th September 1931.—Maulvi Salehuddin Ahmad, Sub-Deputy Collector, on leave, is posted temporarily to the Dacca Division.

POLICE.

Hooghly.—No. 8039A. — 8th September 1931.—Rai Satish Chandra Banarji Bahadur, O.B.E., Deputy Superintendent of Police, on leave, is posted to the headquarters station of the Hooghly district.

Hooghly-Bakarganj. — No. 8040A. — 8th September 1931.—Babu Surendra Nath Sen, officiating Deputy Superintendent of Police, Hooghly, is transferred temporarily to the headquarters station of the Bakarganj district.

ECCLESIASTICAL.

No. 8016A.—8th September 1931.—The services of the Reverend H. F. F. Williams, a Chaplain on the Indian Ecclesiastical Establishment, are placed at the disposal of the Government of the Punjab, with effect from the 12th November 1931, or any subsequent date on which he may be relieved of his duties.

No. 8181 A.—11th September 1931.—The orders contained in Government notifications Nos. 338 A.D., dated the 22nd June 1897, and 133 A., dated the 26th April 1892, granting licenses under sections 6 and 9 of the Indian Christian Marriage Act, XV of 1872, to the Reverend Herbert Anderson and appointing him a Registrar of Births and Deaths under Act VI of 1886 are cancelled.

Confirmation.

GENERAL.

No. 8211 A.—12th September 1931.—The officers, named below, are appointed substantively to the grade of Magistrates and Collectors with effect from the dates mentioned opposite their names:—

Mr. Hubert Graham, I.C.S.—23rd March 1931.

Mr. H. S. E. Stevens, I.C.S.—21st June 1931.

Promotions and confirmations.

POLICE.

No. 8207 A.—12th September 1931.—Mr. C. G. Grassby, Assistant Superintendent of Police, is promoted to the superior scale of the Indian Police Service, with effect from the 25th August 1931, *vice* Mr. T. Clear, retired.

Leave.

GENERAL.

Rangpur.—No. 1366A.D.—7th September 1931.—Maulvi Ahmad Meah, Deputy Magistrate and Deputy Collector, Rangpur, is allowed leave on average pay, under rule 81 (*b*) (*ii*) of the Fundamental Rules, up to the 14th October 1931, with effect from the date on which he may be relieved.

24-Parganas.—No. 1369A.D.—7th September 1931.—Maulvi Waliul Islam, Deputy Magistrate and Deputy Collector, 24-Parganas, is allowed leave on average pay for thirteen days, under rule 81 (*b*) (*ii*) of the Fundamental Rules, with effect from the 2nd October 1931.

No. 7988A.—7th September 1931.—Babu Bhujendra Nath Mukharji, Deputy Magistrate and Deputy Collector, is allowed leave on average pay for one month, under the proviso to rule 81 (*b*) (*ii*) of the Fundamental Rules, in extension of the leave granted to him under the orders of the 27th March 1931

No. 7992A.—7th September 1931.—Mr H. P. V Townend, I.C.S., has been granted by the High Commissioner for India an extension of leave on half average pay, on medical certificate, for six months.

Pabna.—No. 8006A.—7th September 1931. —Maulvi Abu Muhammad Nasiruddin, Deputy Magistrate and Deputy Collector, Pabna, is allowed leave on average pay for three months, under the proviso to rule 81 (*b*) (*ii*) of the Fundamental Rules, with effect from the 28th July 1931

Calcutta.—No 1412A.D —8th September 1931.—Mr. D. MacPherson, I.C.S., Secretary to the Board of Revenue, Bengal, is allowed leave for twelve months, viz., leave on average pay for eight months, under rule 81 (*b*) (*i*) of the Fundamental Rules, with effect from the 27th October 1931, and leave on half average pay for the remaining period, under rule 81 (*d*) of those rules.

Dinajpur.—No. 8013A. — 8th September 1931.—Babu Subodh Kumar Ghosh, Deputy Magistrate and Deputy Collector, Dinajpur, is allowed leave on average pay for nineteen days, under rule 81 (*b*) (*ii*) of the Fundamental Rules, with effect from the 27th October 1931.

Rangpur.—No. 8192 A.—11th September 1931.—In supersession of the orders of the 2nd March 1931, Maulvi Mahmood Ahmad, Deputy Magistrate and Deputy Collector, Rangpur, is allowed leave on average pay for four months, under rule 81 (*b*) (*ii*) of the Fundamental Rules, with effect from the 10th March 1931.

Hooghly.—No. 1457 A.D.—12th September 1931.—In modification of the orders contained in notification No. 7619 A., dated the 22nd August 1931, Mr. A. S. Larkin, I.C.S., Magistrate and Collector, Hooghly, is allowed leave on average pay for twenty-six days, under rule 81 (*b*) (*i*) of the Fundamental Rules, with effect from the 8th September 1931.

24-Parganas.—No. 1461 A.D.—12th September 1931.—Mr. Jatindra Nath Talukdar, I.C.S., officiating Additional District and Sessions Judge, 24-Parganas, is allowed leave on average pay from the 11th October to the 12th November 1931, inclusive, under rule 81 (*b*) (*ii*) of the Fundamental Rules.

Mymensingh.—No. 8202 A.—12th September 1931.—In modification of the orders of the 7th August 1931, Babu Hem Chandra Sen, Sub-Deputy Collector, Mymensingh, is allowed leave on average pay for one month, with effect from the 15th September 1931.

Nadia.—No. 8215 A.—14th September 1931. —Mr. Alexander Jitendra Lal Mittet, Deputy Magistrate and Deputy Collector, Nadia, is allowed leave on average pay, under rule 81 (*b*) (*ii*) of the Fundamental Rules, from the 27th October to the 7th November 1931, inclusive.

POLICE.

Bakarganj.—No. 8142A —9th September 1931 —Rai Satish Chandra Banarji Bahadur, O.B.E., Deputy Superintendent of Police, Bakarganj, is allowed leave on average pay for twenty-six days, under rule 81 (*b*) (*ii*) of the Fundamental Rules, with effect from the 10th August 1931.

R. N. REID,

Chief Secy to the Govt. of Bengal (offg.).

NOTIFICATION.

No 8041A.—9th September 1931.—In exercise of the powers conferred by rule 9 of the Bengal Electoral Rules, the Governor in Council is pleased to direct that the following further amendments shall be made in the Bengal Electoral Regulations published with notification No. 1627A.R , dated the 11th August 1923, namely:—

1. In clause (*l*) of Regulation XIA of the said regulations for the words "The registering authority shall" the following shall be substituted, namely:—

"The registering authority, or in any case where the registering authority is a Commissioner of a Division or the Member, Board of Revenue, his agent employed under Regulation VI, shall"

2 In Regulation XVII of the said regulations for the words "to the registering authority, who" the words "to the registering authority and to the agent, if any, employed under Regulation VI, and such registering authority or agent" shall be substituted

R. N. REID,

Chief Secy. to the Govt. of Bengal (offg.).

POLITICAL DEPARTMENT.

Political.

NOTIFICATIONS.

No. 15184P —9th September 1931.—In exercise of the power conferred by section 99A of the Code of Criminal Procedure, 1898 (Act V of 1898), the Governor in Council hereby declares to be forfeited to His Majesty all copies, wherever found, of a pamphlet in Hindi entitled "Jazbaye Watan" compiled by one Pannalal Guzrati and printed at the Krishnarjun Press, 2, Daihatta Street, Calcutta, on the ground that the said pamphlet contains matter which brings or attempts to bring into hatred or contempt and excites or attempts to excite disaffection towards the Government established by law in British India, the publication of which is punishable under section 124A of the Indian Penal Code.

No. 15507P.—14th September 1931.—In exercise of the power conferred by section 99A of the Code of Criminal Procedure, 1898 (Act V of 1898), the Governor in Council hereby declares to be forfeited to His Majesty all copies, wherever found, of the leaflet in Bengali entitled "Kalo Engraj dubuk Shadar raktete," commencing with the words "Ajo Bharater Se din kothai" and ending with the words "Bolshevik Bharatiya Raktabahini," on the ground that the said leaflet contains matter which brings or attempts to bring into hatred or contempt and excites or attempts to excite disaffection towards the Government established by law in British India, the publication of which is punishable under section 124A of the Indian Penal Code.

No. 15568P.—14th September 1931.—In exercise of the power conferred by section 99A of the Code of Criminal Procedure, 1898 (Act V of 1898), the Governor in Council hereby declares to be forfeited to His Majesty all copies, wherever found, of a Bengali book entitled "Swaraj Sangit" by Protap Chandra Maity, printed by A. C. Maiti at the Domadar Printing Works, 104, Amherst Street, Calcutta, and published by the same person from 208/2G, Cornwallis Street, Calcutta, on the ground that the said book contains matter which brings or attempts to bring into hatred or contempt and excites or attempts to excite disaffection towards the Government established by law in British India, the publication of which is punishable under section 124A of the Indian Penal Code.

No. 15753P.—15th September 1931.—In exercise of the power conferred by section 99A of the Code of Criminal Procedure, 1898 (Act V of 1898), the Governor in Council hereby declares to be forfeited to His Majesty all copies, wherever found, of a book in Bengali entitled "Kaler Bheri" by Bijoy Lal Chatterjee of 17, Bhim Ghose Lane, Calcutta, printed by Sachindra Ranjan Das of the Singha Printing Works, 34/1B, Badurbagan Street, Calcutta, on the ground that the said book contains matter which brings or attempts to bring into hatred or contempt and excites or attempts to excite disaffection towards the Government established by law in British India, the publication of which is punishable under section 124A of the Indian Penal Code.

R. N. REID,

Chief Secy. to the Govt. of Bengal (offg.).

POLICE DEPARTMENT.

NOTIFICATIONS.

Bogra.—No. 4036Pl.—9th September 1931.—In exercise of the power conferred by section 4 (*l*) (*s*) of the Code of Criminal Procedure, 1898 (Act V of 1898), and in modification of all previous notifications published in the *Calcutta Gazette* relating to the area included in the Sariakandi police-station in the district of Bogra and to the boundaries of that area, the Governor in Council is pleased to declare that the village specified in the following schedule, which has hitherto been included in that police-station, shall be included in the police-station Gabtali in the same district:—

Schedule.

Name of village.	General jurisdiction list number of police-station Sariakandi.	Remarks.
Telihata ..	56	Recorded in the revenue survey as mauza Pahani Masindi or Talita bearing jurisdiction list No. 139 of police-station Sariakandi.

Chittagong.—No. 4057Pl.—11th September 1931.—In exercise of the power conferred by section 4 (*l*) (*s*) of the Code of Criminal Procedure, 1898 (Act V of 1898), and in supersession of all previous notifications published in the *Calcutta Gazette* relating to the area included in the Ukhia police-station, in the district of Chittagong, and to the boundaries of that area, the Governor in Council is pleased to declare that the said police-station shall include the villages specified in the following schedule, namely:—

Schedule.

Names of villages.	Jurisdiction list No.
Jaliapalong ...	1
Inani ...	2
Reserve Ukhiarghat ...	3
Rumkhapalong ...	4
Marichapalong ...	5
Paglirbil ...	6
Haladiapalong ...	7
Ratnapalong ...	8
Rajapalong ...	9
Uhalapalong ...	10
Ukhia ...	11
Ukhiarghat ...	12
Palong Khali ...	13

Chittagong.—No. 4058Pl.—11th September 1931.—In exercise of the power conferred by section 4 (*l*) (*s*) of the Code of Criminal Procedure, 1898 (Act V of 1898), and in supersession of all previous notifications published in the *Calcutta Gazette* relating to the area included in the Teknaf police-station, in the district of Chittagong, and to the boundaries of that area, the Governor in Council is pleased to declare that the said police-station shall include the villages specified in the following schedule, namely:—

Schedule.

Names of villages.	Jurisdiction list No.
Silkhali ...	1
Reserve Uttar Nhila ...	2
Uttar Nhila ...	3
Madhya Nhila ...	4
Dakshin Nhila ...	5
Reserve Teknaf ...	6
Baradeil ...	7
Lengurbil ...	8
Teknaf ...	9
Sabrang ...	10
Sahaparidwip ...	11
Jinjiradwip ...	12

R. N. REID,

Chief Secy. to the Govt. of Bengal (offg.).

JUDICIAL DEPARTMENT.

No. 8260A.

Powers.

Faridpur - Khulna - Bankura - 24-Parganas-Burdwan.—No. 1401A.D. — 7th September 1931.—The officers, named below, are vested with the powers of an Assistant Sessions Judge:—

Babu Rebati Mohan Goswami, Subordinate Judge, Faridpur.

Babu Hira Lal Mukharji, Subordinate Judge, Khulna.

Babu Narendra Kumar Mukharji, Subordinate Judge, Bankura.

Babu Kshirada Ranjan Dhar, Subordinate Judge, 24-Parganas.

Babu Jyotish Chandra Neogi, Subordinate Judge, Asansol, Burdwan.

Dacca.—No. 1433A.D. — 9th September 1931.—In exercise of the power conferred by section 10 of the Eastern Frontier Rifles (Bengal Battalion) Act, II of 1920, the Governor in Council is pleased to invest Captain J. K. Jones, Assistant Commandant, Eastern Frontier Rifles (Bengal Battalion), with the powers of a Magistrate of the third class under the Code of Criminal Procedure, 1898, for the purpose of enquiring into or trying any offence committed by a rifleman of the Eastern Frontier Rifles, and punishable under Act V of 1861, or the Eastern Frontier Rifles (Bengal Battalion) Act, II of 1920, and any offence committed by a rifleman against the person or property of another rifleman and punishable under any sections of the Indian Penal Code or of any other Act in force in Bengal.

Dacca.—No. 1435A.D. — 9th September 1931.—In exercise of the power conferred by sub-section (2) of section 190 of the Code of Criminal Procedure, 1898 (Act V of 1898), the Governor in Council is pleased to empower Captain J. K. Jones, Assistant Commandant, Eastern Frontier Rifles (Bengal Battalion), holding powers of a Magistrate of the third class, to take cognizance, under sub-section (1), clause (*a*) or clause (*b*) of the said section, of offences under the Eastern Frontier Rifles (Bengal Battalion) Act, 1920 (Bengal Act II of 1920).

Bakarganj.—No. 8196 A.—11th September 1931.— Babu Mohini Mohan Chakrabatti, Sub-Deputy Magistrate, Bakarganj, is vested with the powers of a Magistrate of the second class.

Jalpaiguri.—No. 8198 A.—11th September 1931.—Babu Bhupendra Kumar Adhikari, Deputy Magistrate, on probation, Jalpaiguri, is vested with the powers of a Magistrate of the second class.

R. N. REID,
Chief Secy. to the Govt. of Bengal (offg.).

Appointments and Transfers.

24-Parganas.—No. 6546J.—3rd September 1931.—In exercise of the powers conferred by sections 14 and 15 and the proviso to section 357 of the Code of Criminal Procedure, 1898 (Act V of 1898), the Governor in Council is pleased—

(*a*) to confer upon each of the gentlemen named below the powers of a Magistrate of the third class, in the district of the 24-Parganas, for a period of three years from the 14th October 1931,

(*b*) to direct him to sit as a member of the Gobardanga bench in the said district, and

(*c*) to direct him to take down evidence in the English language—

Babu Jagat Prasanna Mukharji
Babu Pramatha Nath Datta

Mymensingh-Birbhum. — No. 6551J.—5th September 1931.—Babu Brajendra Lal Sarkar, who last acted as a munsif at Kishoreganj, in the district of Mymensingh, is appointed to act as a munsif in the district of Birbhum, to be ordinarily stationed at Dubrajpur, during the absence, on leave, of Babu Narayan Chandra Basu, or until further orders.

Burdwan.—No. 6553J. — 5th September 1931.—In exercise of the powers conferred by sections 14 and 15 and the proviso to section 357 of the Code of Criminal Procedure, 1898 (Act V of 1898), the Governor in Council is pleased—

(*a*) to confer upon Dr. Mohammad Nazem the powers of a Magistrate of the second class, in the district of Burdwan, for a period of three years from the date of this notification, in respect to such cases as may be made over to him within the limits of the Sadar subdivision of the said district,

(*b*) to direct that he shall, in addition to sitting singly, sit as a member of the Sadar bench in the said district, and

(*c*) to direct him to take down evidence in the English language.

24-Parganas-Nadia-Rajshahi-Malda. — No. 6556J.—5th September 1931.—Babu Daibaki Lal Sen Gupta, Subordinate Judge and Assistant Sessions Judge, 24-Parganas, is appointed to be Additional Subordinate Judge and Assistant Sessions Judge of Nadia, *vice* Maulvi Hasibuddin Ahmad, appointed to act as Additional District and Sessions Judge, Rajshahi and Malda.

24-Parganas.—No. 6558J.—5th September 1931.—Babu Basanta Kumar Ray, munsif of Alipore, in the district of the 24-Parganas, is appointed to act as Subordinate Judge of the 24-Parganas, *vice* Babu Daibaki Lal Sen Gupta.

Dinajpur-24-Parganas. — No. 6560J.—5th September 1931.—Babu Manmatha Nath Ray, who last acted as a munsif of Balurghat, in the district of Dinajpur, is appointed to act as a munsif in the district of the 24-Parganas, to be ordinarily stationed at Alipore, *vice* Babu Basanta Kumar Ray.

Bankura-Burdwan.—No. 6562J.—5th September 1931.—Babu Jyotish Chandra Neogi, Additional Subordinate Judge of Bankura, is appointed to be Subordinate Judge of Asansol, in the district of Burdwan, *vice* Babu Akshay Kumar Chakrabatti, appointed to act as Additional District and Sessions Judge, Burdwan.

Dacca-Bankura.—No. 6564J.—5th September 1931.—Babu Durga Prasanna Pal, munsif of Narayanganj, in the district of Dacca, is appointed to act, until further orders, as Additional Subordinate Judge of Bankura, *vice* Babu Jyotish Chandra Neogi.

Dacca.—No. 6566J.—5th September 1931.—Babu Bimal Kumar Bhattacharji, officiating munsif of Manikganj, in the district of Dacca, is appointed to act, until further orders, as a munsif in the same district, to be ordinarily stationed at Narayanganj, *vice* Babu Durga Prasanna Pal.

Faridpur-Dacca.—No. 6568J. — 5th September 1931.—Maulvi Amiruddin Sarkar, who last acted as additional munsif of Faridpur and Madaripur at Madaripur, is appointed to act, until further orders, as a munsif in the District of Dacca, to be ordinarily stationed at Manikganj.

24-Parganas.—No. 6593J.—8th September 1931.—In exercise of the powers conferred by sections 14 and 15 and the proviso to section 357 of the Code of Criminal Procedure, 1898 (Act V of 1898), the Governor in Council is pleased—

(*a*) to confer upon Babu Sudhir Ranjan Ray the powers of a Magistrate of the third class, in the district of the 24-Parganas, for a period of three years from the date of this notification,

(*b*) to direct him to sit as a member of the Kanchrapara bench in the said district, and

(*c*) to direct him to take down evidence in the English language.

Bakarganj.—No. 6634J. — 10th September 1931.—In exercise of the powers conferred by sections 14 and 15 and the proviso to section 357 of the Code of Criminal Procedure, 1898 (Act V of 1898), the Governor in Council is pleased—

(*a*) to confer upon Babu Dhirendra Nath Ray Chaudhuri the powers of a Magistrate of the third class, in the district of Bakarganj, for a period of three years from the 9th October 1931,

(*b*) to direct him to sit as a member of the Sadar bench in the said district, and

(*c*) to direct him to take down evidence in the English language.

Darjeeling.—No. 6651 J.—10th September 1931.—In exercise of the powers conferred by sections 14 and 15 and the proviso to section 357 of the Code of Criminal Procedure, 1898 (Act V of 1898), the Governor in Council is pleased—

(*a*) to confer upon Sardar Bahadur Sonam Wangfel Laden La, C.B.E., the powers of a Magistrate of the second class, in the district of Darjeeling, for a period of three years from the date of this notification, in respect to such cases as may be made over to him within the limits of the Sadar subdivision of the said district,

(*b*) to direct that he shall, in addition to sitting singly, sit as a member of the Sadar bench in the said district, and

(*c*) to direct him to take down evidence in the English language.

Burdwan. — No. 6653J. — 10th September 1931.—In exercise of the powers conferred by sections 14 and 15 of the Code of Criminal Procedure, 1898 (Act V of 1898), the Governor in Council is pleased—

(*a*) to confer upon Babu Ajit Kumar Mukharji the powers of a Magistrate of the third class, in the district of Burdwan, for a period of three years from the date of this notification, and

(*b*) to direct him to sit as a member of the Kalna bench in the said district.

Malda.—No. 6655J.—10th September 1931.—In exercise of the powers conferred by sections 14 and 15 of the Code of Criminal Procedure, 1898 (Act V of 1898), the Governor in Council is pleased—

(*a*) to confer upon Babu Girija Kanta Das the powers of a Magistrate of the third class, in the district of Malda, for a period of three years from the date of this notification, and

(*b*) to direct him to sit as a member of the Old Malda bench in the said district.

24-Parganas-Jessore. — No. 6661J.—10th September 1931.—Babu Ramani Ranjan Biswas, who last acted as a munsif at Alipore, in the district of the 24-Parganas, is appointed to act as a munsif in the district of Jessore, to be ordinarily stationed at Bongaon, during the absence, on leave, of Mr. Santi Priya Basu.

Leave.

Birbhum.—No. 6636J.—24th August 1931.—Babu Narayan Chandra Basu, munsif of Dubrajpur, in the district of Birbhum, is allowed leave for the period from the 2nd September to the 10th October 1931, viz., privilege leave on full pay for fifteen days, under the amendment to article 271 of the Civil Service Regulations, and privilege leave on half pay for the remaining period, under article 271 of those regulations. He is also permitted to affix the civil court vacation of 1931 to the leave, under article 278 of the regulations.

Bogra.—No. 6637J.—26th August 1931.—Babu Raman Chandra Banarji, munsif, acting as Subordinate Judge of Bogra, is allowed leave on average pay for three days, under rules 81 (*b*) (*ii*) and 82 (*b*) of the Fundamental Rules, with effect from the 7th September 1931.

Tippera.—No. 6638J.—26th August 1931.—Babu Manmohan Banarji, munsif, acting as Additional Subordinate Judge of Tippera, is allowed leave on average pay for the period from the 1st September to the 10th October 1931, under rules 81 (*b*) (*ii*) and 82 (*b*) of the Fundamental Rules, and is also permitted to affix thereto the civil court vacation of 1931, under rule 82 (*d*) of those rules.

24-Parganas.—No. 6639J. — 26th August 1931.—Babu Mahima Ranjan Mitra, munsif of Basirhat, in the district of the 24-Parganas, is allowed leave on average pay for one month and eleven days, under rules 81 (*b*) (*ii*) and 82 (*b*) of the Fundamental Rules, with effect from the 13th November 1931, and is also permitted to prefix thereto the civil court vacation of 1931, under rule 82 (*d*) of those rules.

Tippera.—No. 6640J.—27th August 1931.—Babu Sudhangshu Chandra Ghosh, munsif of Comilla, in the district of Tippera, is allowed leave on average pay for one month and eleven days, under rules 81 (*b*) (*ii*) and 82 (*b*) of the Fundamental Rules, with effect from the 13th November 1931, and is also permitted to prefix thereto the civil court vacation of 1931, under rule 82 (*d*) of those rules.

Midnapore.—No. 6641J. — 27th August 1931.—Babu Harendra Nath Banarji, munsif of Jhargram, in the district of Midnapore, is allowed leave on average pay for one month, under rules 81 (*b*) (*ii*) and 82 (*b*) of the Fundamental Rules, in extension of the leave granted to him under the orders of the 14th July 1931.

Promotions and Confirmations.

No. 6604J.—9th September 1931.—The following promotions and confirmations are sanctioned in the Bengal Civil Service (Judicial):—

To be promoted to the selection grade on Rs. 1,200.

Mr. Khagendra Nath Dutta, a Subordinate Judge in the selection grade on Rs. 1,000 (since confirmed as a District Judge), with effect from the 11th April 1931, *vice* Mr. Ram Chandra Ghosh, confirmed as a District Judge.

Babu Lalit Mohan Basu, officiating Additional District and Sessions Judge, Bogra, a Subordinate Judge in the selection grade on Rs. 1,000, with effect from the 16th May 1931, *vice* Mr. Khagendra Nath Datta, confirmed as District Judge.

Babu Shib Charan Sil, Small Cause Court Judge, Dacca and Munshiganj, a Subordinate Judge in the selection grade on Rs. 1,000, with effect from the 15th June 1931, *vice* Babu Kunja Bihari Ballav, retired.

To be promoted to the selection grade on Rs. 1,000.

Babu Kunja Bihari Ghosh, officiating Additional District and Sessions Judge, Sylhet and Cachar, a Subordinate Judge below the selection grades, with effect from the 11th April 1931, *vice* Mr. Khagendra Nath Datta, promoted.

Babu Ram Dulal Deb, a Subordinate Judge, Howrah, below the selection grades, with effect from the 16th May 1931, *vice* Babu Lalit Mohan Basu, promoted.

Babu Gaur Krishna Basu, officiating Additional District and Sessions Judge, Faridpur, a Subordinate Judge below the selection grades, with effect from the 15th June 1931, *vice* Babu Sib Charan Sil, promoted.

Babu Jatindra Nath Mukharji, officiating Additional District and Sessions Judge, Dinajpur, a Subordinate Judge below the selection grades, with effect from the 19th June 1931, *vice* Mr. Hari Jiban Banarji, confirmed as a District Judge.

Maulvi Lutfur Rahman, officiating Additional District and Sessions Judge, Mymensingh, a Subordinate Judge below the selection grades, with effect from the 1st July 1931, *vice* Mr. Ashutosh Roy, confirmed as District Judge.

To be confirmed in the grade of Subordinate Judges below the selection grades.

Babu Surendra Nath Ray, officiating Subordinate Judge, 24-Parganas, with effect from the 11th April 1931, *vice* Babu Kunja Bihari Ghosh, promoted.

He is also confirmed in his present appointment.

Babu Manaranjan Ray, officiating Subordinate Judge, Mymensingh, with effect from the 16th May 1931, *vice* Babu Ram Dulal Deb, promoted.

He is also confirmed in his present appointment.

Babu Atul Chandra Ganguli, officiating Subordinate Judge, Birbhum, with effect from the 15th June 1931, *vice* Babu Gaur Krishna Basu, promoted.

He is also confirmed in his present appointment.

Babu Upendra Chandra Ghosh, officiating Second Additional Subordinate Judge, Sylhet and Cachar, with effect from the 19th June 1931, *vice* Babu Jatindra Nath Mukharji, promoted.

Babu Birendra Chandra Sen Gupta, officiating Second Additional Subordinate Judge, Chittagong, with effect from the 1st July 1931, *vice* Maulvi Lutfur Rahman, promoted.

To be confirmed in the grade of munsifs.

Babu Manindra Mohan Bhattacharji, officiating munsif, Malda, Rajshahi and Malda with effect from the 10th January 1931, *vice* Babu Rajendra Kumar Gupta, confirmed as a Subordinate Judge.

He is also confirmed in his present appointment.

This cancels so much of this department notification No. 6112J., dated the 1st September 1931, as concerns this officer.

Maulvi Hedayetullah, officiating munsif, Khatra, Bankura, with effect from the 16th March 1931, *vice* Babu Madhu Sudan Ray, confirmed as Subordinate Judge.

He is also confirmed in his present appointment.

This cancels so much of this department notification No. 6112J., dated the 1st September 1931, as concerns this officer.

Maulvi Abdul Maleque, officiating munsif, North Raojan, Chittagong, with effect from the 20th March 1931, *vice* Babu Bhujagendra Mustaphi, confirmed as Subordinate Judge.

He is also confirmed in his present appointment.

This cancels so much of this department notification No. 6112J., dated the 1st September 1931, as concerns this officer.

Babu Subodh Chandra Mukharji, officiating munsif, Bagerhat, Khulna, with effect from the 11th April 1931, *vice* Babu Surendra Nath Ray, confirmed as a Subordinate Judge.

He is also confirmed in his present appointment.

Babu Rajkumar Datta, officiating munsif, Sudharam, Noakhali, with effect from the 16th May 1931, *vice* Babu Manaranjan Ray, confirmed as Subordinate Judge.

He is also confirmed in his present appointment.

Babu Matilal Das, officiating munsif, Patuakhali, Bakarganj, with effect from the 19th June 1931, *vice* Babu Upendra Chandra Ghosh, confirmed as Subordinate Judge.

He is also confirmed in his present appointment.

Babu Gauripada Mukharji, officiating munsif, Kurigram, Rangpur, with effect from the 1st July 1931, *vice* Babu Birendra Chandra Sen Gupta, confirmed as Subordinate Judge.

He is also confirmed in his present appointment.

Babu Abani Bhushan Ganguli, officiating munsif, Satkania, Chittagong, with effect from the 12th July 1931, *vice* Babu Suresh Chandra Chakrabatti, deceased.

He is also confirmed in his present appointment.

Babu Kali Narayan Bhattacharji, officiating munsif, Chikandi, Faridpur, with effect from the 21st July 1931, *vice* Babu Hira Lal Das Gupta, deceased.

He is also confirmed in his present appointment.

J. W. NELSON,
Secy. to the Govt. of Bengal.

LOCAL SELF-GOVERNMENT DEPARTMENT.

NOTIFICATIONS.

Minister-in-charge: The Hon'ble Mr. Bijoy Prasad Singh Roy.

Jalpaiguri.—No. 3546M.—7th September 1931.—In exercise of the power conferred by clause (*a*) of section 59 of the Bengal Municipal Act, 1884 (Bengal Act III of 1884), the Government of Bengal (Ministry of Local Self-Government) are pleased to approve the resolution passed by the Commissioners of the Jalpaiguri Municipality under section 23 of that Act, electing Maulvi Abdus Sattar, B.L., to be their Chairman.

Burdwan.—No. 3591M. — 9th September 1931.—In exercise of the power conferred by section 351 of the Bengal Municipal Act, 1884 (Bengal Act III of 1884), the Government of Bengal (Ministry of Local Self-Government) are pleased to confirm the by-laws framed by the Commissioners of the Kalna Municipality in the district of Burdwan under section 350 of the said Act and published for information with notification No. 2159M., dated the 11th June 1931.

Calcutta.—No. 3593M. — 9th September 1931.—In exercise of the power conferred by clause (*c*) of sub-section (*1*) of section 3 of the Calcutta Suppression of Immoral Traffic Act, 1923 (Bengal Act XIII of 1923), and upon the recommendation of the Corporation of Calcutta, the Government of Bengal (Ministry of Local Self-Government) are pleased to declare Madan Pal Lane and Ketuakhoti Road in Calcutta to be main thoroughfares for the purposes of that clause.

Khulna.—No. 3647M. — 10th September 1931.—In exercise of the power conferred by clause (*a*) of section 59 of the Bengal Municipal Act, 1884 (Bengal Act III of 1884), the Government of Bengal (Ministry of Local Self-Government) are pleased to approve the resolution passed by the Commissioners of the Debhatta Municipality in the district of Khulna under section 23 of that Act, electing Babu Phani Bhusan Mondal to be their Chairman.

Mymensingh.—No. 3687L.S.-G. — 11th September 1931.—In exercise of the power conferred by clauses (*a*) and (*b*) of section 31 of Cattle Tresspass Act, 1871 (Act I of 1871), and in modification of the orders contained in clauses (*a*) and (*b*) of notification No. 317J.-T.M., dated the 16th August 1913, and in clauses (*a*) and (*b*) of notification No. 1428-L.S.-G., dated the 18th May 1914, the Government of Bengal (Ministry of Local Self-Government) are pleased to—

(*i*) transfer to the union boards in the district of Mymensingh, named below, all the functions of the Magistrate of that district, under Chapters II and III of the said Act, I of 1871, in respect of all pounds within the local areas, subject, respectively, to the jurisdiction of the said union boards and

(*ii*) direct that the whole of the surplus accruing under section 18 of the said Act, I of 1871, in the areas under the jurisdiction of the union boards in the district of Mymensingh, named below, shall be placed to the credit of the union funds, respectively, constituted for the said union boards—

District Mymensingh, subdivision Netrakona.
Police-station Barhatta.

Union boards Baushi, Sahata, Barhatta, Asma, Chhiram and Sindha.

Police-station Atpara.

Union boards Sarmaisa, Sunai, Loneswar, Teligati and Duaz.

Medical.

Minister-in-charge: The Hon'ble Mr. Bijoy Prasad Singh Roy.

Bakarganj.—No. 2769Medl.—7th September 1931.—Major T. H. Thomas, I.M.S., Civil Surgeon, Bakarganj, is provisionally granted leave on average pay for seven months, under rule 81 (*b*) (*i*) of the Fundamental Rules, with effect from the 12th September 1931.

Calcutta-Bakarganj.—No. 2770Medl. — 7th September 1931.—Major H. E. Murray, I.M.S., on relief from his duties as officiating Surgeon-Superintendent, Presidency General Hospital, Calcutta, is appointed as Civil Surgeon, Bakarganj, *vice* Major T. H. Thomas, I.M.S.

Calcutta.—No. 2772Medl.—7th September 1931.—Dr. Durga Pada Ghosh, Surgical Registrar, Medical College Hospital, Calcutta, is granted leave on average pay out of India and Ceylon, under rule 81 (*b*) (*ii*) of the Fundamental Rules, for the period from the 15th September 1931 to the 28th March 1932.

Chittagong.—No. 2750Medl.—3rd September 1931.—Assistant Surgeon Dr. Jogendra Nath Basu of the General Hospital, Chittagong, and Teacher of Materia Medica, Chittagong Medical School, is allowed leave on average pay for two months, under rule 81 (*b*) (*ii*) of the Fundamental Rules, with effect from the date of relief.

Tippera-Chittagong.—No. 2751Medl.—3rd September 1931.—Assistant Surgeon Dr. Keshab Chandra Sen Gupta of Brahmanberia subdivision and dispensary is posted temporarily to the General Hospital, Chittagong, and as Teacher of Materia Medica, Chittagong Medical School, *vice* Dr. Jogendra Nath Basu.

Calcutta.—No. 2806Medl.—9th September 1931.—Mr. K. S. Mitra, Secretary, Medical College Hospitals, Calcutta, is granted leave on full pay for one month and fourteen days, under Fundamental Rule 103 and Subsidiary Rule 275 (*a*), with effect from the 1st September 1931.

Calcutta.—No. 2807Medl.—9th September 1931.—Mr. Surendra Nath Chakravarty, Secretary, Medical College, Calcutta, is appointed to act as Secretary, Medical College Hospitals, in addition to his own duties, without allowance, *vice* Mr. K. S. Mitra, on leave.

Calcutta.—No. 303 T.Medl.—9th September 1931.—First Class Military Assistant Surgeon M. J. Nicholas is appointed on a provisional basis as Superintendent, Pasteur Institute, Calcutta, with effect from the 14th September 1931, *vice* Major E. C. R. Fox, I.M.D., retired.

Public Health.

NOTIFICATIONS.

Minister-in-charge: The Hon'ble Mr. Bijoy Prasad Singh Roy.

Khulna.—No. 2044P.H. —7th September 1931.—In exercise of the power conferred by section 290 of the Bengal Municipal Act, 1884 (Bengal Act III of 1884), the Government of Bengal (Ministry of Public Health) are pleased to add the following rule to the rules published under notification No. 602-P.H., dated the 25th February 1931, subject to which the Commissioners of the Khulna Municipality may allow communication pipes to be laid from the service-pipes of the Commissioners for the purpose of leading water to holdings within the municipality for domestic purposes only:—

Rule.

22. Rules 1 (so far as it relates to addition and alteration to an existing water-supply), 14, 15, 16, 17 and 19 shall apply to the connections given before the issue of these rules.

Rangpur.—No. 2098P.H.—10th September 1931.—In exercise of the power conferred by sub-section (*1*) of section 349D of the Bengal Municipal Act, 1884 (as amended by Bengal Act II of 1914), the Government of Bengal (Ministry of Public Health) are pleased to direct that the Commissioners of the Rangpur Municipality in the district of Rangpur, shall appoint one 2nd Class Health Officer and one 2nd Class Sanitary Inspector.

II. This cancels so much of paragraph 11 of notification No. 82T.San., dated the 4th October 1915, as relates to the Rangpur Municipality.

No. 2101P.H.—10th September 1931.—Under rule 7 of the Local Authorities' Loan Rules, 1915, as subsequently amended, it is hereby notified for general information that the Government of Bengal (Ministry of Public Health) intend to sanction the following application from the Commissioners of the Narayanganj Municipality for a loan of Rs. 28,000 from Government bearing interest at the rate of 6½ per cent. per annum and repayable in forty half-yearly instalments of Rs. 1,260-12-6 each for the extension of their waterworks scheme to the municipal area on the east bank of the river Lakshya, unless good reasons are shown to the contrary within one month from the date of publication of this notification within the municipality.

Application from the Commissioners of the Narayanganj Municipality for a loan of Rs. 32,500.

bank of the river Lakhiya at an estimated cost of Rs. 2,07,500.

for 1931-32.

Municipal Fund

as amended by Act III of 1886

years

per annum

instalment.

1931.

commencing from 1st December 1932 till the loan is paid off

Receipt of loan. (a)	(b)	(c)	(d)	(e)	Repayment of loan. (f)	(g)
5 The period for which the loan is required.	6 The rate of interest at which it is proposed to borrow.	7 The number of instalments in which it is proposed that the loan should be taken.	8 The amount of each instalment.	9 The date proposed for receiving each.	10 The number of instalments in which the loan is repayable and the date of payment thereof.	11 Amount of each instalment.

1 The work or works for which the loan is required and the estimate of the cost thereof.

12 Sources from which the revenue is derived.

13 Amounts for— 1928-29. Rs.

14 Amounts for— 1929-30. Rs.

15 Amounts for— 1930-31. Rs.

16 Objects for which the expenditure is incurred.

17 Amounts for— 1928-29. Rs.

18 Amounts for— 1929-30. Rs.

19 Amounts for— 1930-31. Rs.

20 Improvement of the existing water-supply on the west side.

12	13	14	15	16	17	18	19	20
Financial position of the local body. Revenue (details of the preceding 3 years). (a) Municipal rates and taxes—				Expenditure (details of the preceding 3 years). 1. General administration and collection charges.	Rs. 10,274	Rs. 11,316	Rs. 10,092	
(i) Tax on holdings or persons.	61,001	65,363	63,301	2. Public safety	3,960	5,595	11,004	
(2) Water rate ..	44,603	48,495	46,142	3. Public health and convenience (excluding capital outlay on water-supply or drainage, the cost of constructing new roads and buildings and special expenditure met out of non-recurring grants for donations)—				
(3) Latrine fees ..	35,587	37,625	35,389	(i) Water-supply (establishment and repairs)	22,739	21,441	15,643	
(4) Lighting rate ..	..	..	..	(ii) Drainage (establishment and repairs)	2,828	2,763	4,271	
(5) Tax on animals and vehicles.	416	463	363	(iii) Conservancy, etc. (heads 3 to 13 in account form No. 1).	56,613	64,919	62,753	
(6) Tax on professions and trades.	467	511	591	(iv) Public Works (establishment, repairs and tools and plant).	36,560	36,124	40,020	
(b) Realisation under special Acts.	1,207	677	1,026	4. Public instruction	10,541	14,077	15,623	
(c) Revenue derived from municipal property and powers apart from taxation (excluding sale-proceeds of land).	16,915	17,964	17,843	5. Contributions (recurring)	..	..	..	

The normal surplus which may be expected in future, (i.e., difference between the average ordinary expenditure calculated on the figures in columns 13 to 15 and 17 to 19 respectively.

The Waterworks Extension Scheme for the Narayanganj municipal area on the east	Rs. 28,000	The Narayanganj	Bengal Municipal Act of 1884.	Twenty	6¾ per cent.	In one	Rs. 28,000	1st December	Forty half-yearly instalments payable on 1st December and 1st June every year	Rs. 1,260-12-6.	(d) Grants and contributions (recurring).	..	..	..	6. Miscellaneous (individual items exceeding Rs. 1,000 to be detailed in the remarks column).	9,808	14,382	12,510	Rs. 576, besides Rs. 40,000 kept in fixed deposit with the Imperial Bank for
											(e) Miscellaneous (details of individual items exceeding Rs. 1,000 to be furnished in the remarks column).	2,468	3,154	5,097	7. Repayment of loan	1,576	1,639	5,556	
															(X) Total ordinary expenditure ..	1,54,908	1,72,256	1,78,277	
											Total ordinary income ..	1,62,664	1,74,252	1,70,252	8. Extraordinary and debt excluding repayment of loan.	4,658	1,30,153	81,937	
											(f) Extraordinary and debt	6,016	90,614	13,808	9. (i) Capital outlay on—				
															(a) Water-supply	35,000	..	100	
											(g) Receipts of abnormal character—				(b) Drainage	..	..	3,535	
											(1) Sale-proceeds of lands	402	273	196	(c) Buildings and roads (new works)	403	..	145	
											(2) Grants and contributions (non-recurring or special).	35,599	54,855	3,972	(ii) Other expenditure from special grants or donations.	.		..	
											(3) Other items ..	10,806	7,533	6,355	(Y) Total of (i) and (ii) ..	35,403	..	3,780	
															Deduct expenditure out of loans, special grants or donations, *vide* account No. 72.	35,000	..	..	
															Net capital expenditure met out of revenue	403	..	3,780	
											Total ..	2,15,787	3,27,527	1,94,673	Total of (X), (8) and (Y) ..	1,94,969	3,08,409	2,63,994	
											Opening balance ..	52,568	73,386	92,504	Closing balance—Special Fund—				
															(a) Water	36,255	60,939	−18	
															(b) Lighting	..	..	..	
															(c) Latrine	14,280	12,773	16,004	
															Revenue fund	22,851	18,792	7,197	
											GRAND TOTAL ..	2,68,355	4,00,913	2,87,177	GRAND TOTAL ..	2,68,355	4,00,913	2,87,177	

In addition to the details required on the previous page, clear information should be given below under the following heads :—

(*a*) If the ordinary surplus is insufficient to meet the charges of the proposed loan, the particular steps which the municipality has taken, or has agreed to take in order to make good the deficiency.

(*a*) It has been proposed to levy as usual a water-rate at 6 per cent. on the annual value of holdings without water connections and at 7½ per cent. on holdings having water connection. This, together with the surplus of the rate realised on the west of the river Lakshya, will go to meet the charges for the water extension scheme for the east side.

(*b*) The reserve of taxation or other possible means of increase in the revenues of the municipality, the rates at which each of the taxes mentioned in column 12 on the previous page are levied, other than tax on persons, should be stated here.

(*b*) The increase in the revenue by the imposition of water-rate as above in the usual way. The house tax is levied at 6¾ per cent. on the annual value of holdings. The latrine tax on a scale sanctioned by Government (*vide* page 80 of Government of Bengal, Local Self-Government Department, resolution reviewing the reports on the working of municipalities in Bengal during the year 1929-30).

(*c*) A statement of all outstanding loans specifying, in respect of each loan, the date when taken, the purpose (very briefly), the amount, the annual charges involved, and the amount still payable.

(*c*) A loan of Rs. 75,000, being the 1st instalment of the estimated cost of Rs. 2,07,500, was received from the Government on the 20th February 1930 for the waterworks extension scheme for the east side of the river Lakshya; the annual charges involved on the loan is Rs. 6,358-14 and the amount still payable is Rs. 72,924-3.

(*d*) Any explanations in regard to receipts and expenditure to show the true financial position of the municipality when such position is otherwise than the ordinary surplus would indicate.

C. W. GURNER,

Secy. to the Govt. of Bengal.

EDUCATION DEPARTMENT.

DARJEELING, THE 13TH SEPTEMBER 1931.

RESOLUTION—No. 845T.EDN.

Minister-in-charge: The Hon'ble Mr. K. Nazim-ud-Din, C.I.E.

The Government of Bengal (Ministry of Education) have received information of participation by certain students of Government institutions in demonstrations in connection with convictions in murder cases and consider it necessary to issue the following warning for the information of parents and guardians of students reading in Government colleges, schools, madrasahs and other Government institutions controlled by the Education Department.

Government wish it to be clearly understood that in future they are unwilling to retain in any Government institution a student who, by absenting himself from classes or by any action during class hours, associates himself with demonstrations in connection with decisions of criminal courts. All students who do so will be given transfer certificates and required to leave the institution forthwith; if they have absented themselves they will not be re-admitted. Only in exceptional cases are heads of institutions allowed discretion to re-admit defaulters under suitable conditions, but Government expect that this discretion will be firmly used and require that every case in which it may be exercised should be reported to the Director of Public Instruction, Bengal, immediately.

ORDER—Ordered that a copy of the Resolution be published in the *Calcutta Gazette*.

Ordered also that a copy of the Resolution be forwarded to the Director of Public Instruction, Bengal, for information and circulation to heads of institutions.

By order of the Government of Bengal
(Ministry of Education),

A. J. DASH,

Secy. to the Govt. of Bengal.

NOTIFICATIONS.

Minister-in-charge: The Hon'ble Mr. K. Nazim-ud-Din, C.I.E.

Calcutta-Rajshahi.—No. 769T.Edn. — 5th September 1931.—Babu Probodh Chandra Sen, Lecturer in Mathematics, Bethune College, Calcutta, is appointed to be Professor of Mathematics, Rajshahi College, with effect from the 20th November 1931, or any subsequent date on which he joins the appointment, *vice* Babu Upendra Nath Ray, under orders of retirement.

Rajshahi.—No. 824T.Edn.—11th September 1931.—Babu Harilal Chaudhuri, Professor, Rajshahi College, is appointed, until further orders, to act on his own pay in the Bengal Educational Service as Vice-Principal of the college, with effect from the date on which he assumes the duties of the post.

Registration.

NOTIFICATIONS.

Minister-in-charge: The Hon'ble Mr. K. Nazim-ud-Din, C.I.E.

Pabna. — No 768Regn. — 10th September 1931.—In exercise of the power conferred by section 3 of the Bengal Muhammadan Marriages and Divorces Registration Act, 1876 (Bengal Act I of 1876), the Government of Bengal (Ministry of Education) are pleased to appoint Maulvi Md Torab Ali temporarily to be a Muhammadan Registrar within the police-station of Pabna, in the district of Pabna, during the absence, on leave, of Maulvi Saiyid Mainuddin, or until further orders

Pabna. — No. 769Regn. — 10th September 1931.—In exercise of the power conferred by section 2 of the Kazis' Act, 1880 (Act XII of 1880), the Government of Bengal (Ministry of Education) are pleased to appoint Maulvi Md. Torab Ali temporarily to be the Kazi for the celebration of marriages and the performance of other rites and ceremonies within the police-station of Pabna, in the district of Pabna, during the absence, on leave, of Maulvi Saiyid Mainuddin, or until further orders.

24-Parganas.—No. 782T.Regn.—7th September 1931.—In exercise of the power conferred by section 3 of the Bengal Muhammadan Marriages and Divorces Registration Act, 1876 (Bengal Act I of 1876), the Government of Bengal (Ministry of Education) are pleased to appoint Maulvi Salehuddin Ahmed to be a Muhammadan Registrar within the police-station of Ballygunge, in the district of the 24-Parganas.

24-Parganas.—No. 783T.Regn.—7th September 1931.—In exercise of the power conferred by section 2 of the Kazis' Act, 1880 (Act XII of 1880), the Government of Bengal (Ministry of Education) are pleased to appoint Maulvi Salehuddin Ahmed to be the Kazi for the celebration of marriages and the performance of other rites and ceremonies within the police-station of Ballygunge, in the district of the 24-Parganas.

Calcutta.—No. 831T.Regn.—12th September 1931.—Khan Sahib Maulvi Saiyid Moshfiqus Saleheen, Sub-Registrar of Calcutta, will continue to act, until further orders, as Registrar of Calcutta, *vice* Khan Sahib Maulvi Abdul Majid, deceased.

A. J. DASH,
Secy. to the Govt of Bengal.

Orders by the Director of Public Instruction, Bengal.

BENGAL EDUCATIONAL SERVICE.

Hooghly.—No. 31B.—5th September 1931 Babu Bhabesh Chandra Banerji, Professor, Hooghly College, in the Bengal Educational Service, is granted, in terms of the proviso to rule 81 (*b*) (*ii*) of the Fundamental Rules, leave on average pay, on medical certificate, for the period from the 3rd August 1931 to the 10th October 1931.

2. He is permitted to prefix to his leave Sunday, the 2nd August 1931, and to suffix to it the Puja vacation of the Hooghly College for 1931 extending from the 11th October 1931 to the 11th November 1931.

Calcutta.—No. 32B.—5th September 1931. —Mr. Kshetrapal Das Ghosh, Professor, David Hare Training College, Calcutta, in the Bengal Educational Service, is granted, in terms of the proviso to rule 81 (*b*) (*ii*) of the Fundamental Rules, leave on average pay, on medical certificate, for the period from 6th July 1931 to 19th September 1931.

2. He is permitted to prefix to his leave a portion of the summer vacation of the David Hare Training College from 26th May 1931 to 5th July 1931, and to suffix to it Sunday, the 20th September 1931.

Dacca.—No. 33 B.—9th September 1931.—Babu Pramatha Nath Das Gupta, District Inspector of Schools, Dacca, in the Bengal Educational Service, is granted, under article 260 of the Civil Service Regulations, privilege leave for one month, with effect from 15th September 1931.

2. He is permitted to suffix to his leave the next Puja holidays extending from 15th to 26th October 1931.

3. This cancels this office notification No. 24B., dated 7th July 1931, granting leave to the officer for twenty-two days from 16th June 1931.

J. M. BOTTOMLEY,
Director of Public Instrn., Bengal (offg.).

Orders by the Inspector-General of Registration, Bengal.

Calcutta-Jessore.—No. 605.—8th September 1931.—Babu Bhababhuti Bhattacharya, Sub-Registrar attached to Calcutta, acted as Sub-Registrar of Manirampur, in the district of Jessore, from the afternoon of the 27th January 1931 to the 7th April 1931.

This cancels this department notification No. 20, dated the 14th January 1931, appointing Babu Nakuleswar Chakrabatti, Probationary Sub-Registrar of Calcutta, as Sub-Registrar of Manirampur, Jessore, with effect from the date on which he joins the appointment.

Mymensingh.—No. 606 —8th September 1931.—Maulvi Abul Hosain, No. I, Sub-Registrar attached to Mymensingh, is allowed leave on average pay for one month and fifteen days, under rule 81 (*b*) (*ii*) of the Fundamental Rules, in extension of the leave granted to him in this department notification No. 886, dated the 20th July 1931.

Dinajpur.—No. 607.—8th September 1931. —Babu Ramesh Chandra Datta, Sub-Registrar of Birganj, in the district of Dinajpur, is allowed leave on average pay for one month, under rule 81 (*b*) (*ii*) of the Fundamental Rules, with effect from the 22nd August 1931, or from any subsequent date on which he may be relieved.

Dinajpur.—No. 608.—8th September 1931.—Maulvi Tajuddin Ahmad, Probationary Sub-Registrar of Dinajpur, is appointed to act as Sub-Registrar of Birganj in the same district, with effect from the date on which he joins the appointment.

Khulna.—No. 609.—8th September 1931.—Babu Jatindra Nath Raha, Sub-Registrar, under orders of transfer to Mollahat, in the district of Khulna, is allowed leave on average pay for two months and twenty-one days, under rule 81 (*b*) (*ii*) of the Fundamental Rules, in extension of the leave granted to him in this department notification No. 361, dated the 27th May 1931.

Mymensingh.—No. 610. — 8th September 1931.—Babu Nalini Kanta Mukharji, Second Joint Sub-Registrar of Jamalpur, in the district of Mymensingh, is allowed leave on average pay for fifteen days, under rule 81 (*b*) (*ii*) of the Fundamental Rules, with effect from the 6th July 1931.

Mymensingh-Dacca.—No. 611.—8th September 1931.—Maulvi Mataheral Karim, Second Joint Sub-Registrar of Kishoreganj, in the district of Mymensingh, under orders of transfer to Kaliakair, in the district of Dacca, is allowed leave on average pay for twenty-nine days, under rule 81 (*b*) (*ii*) of the Fundamental Rules, in extension of the leave granted to him in this department notification No. 494, dated the 29th July 1931.

Midnapore.—No. 612. — 8th September 1931.—Maulvi Abdul Bari, Joint Sub-Registrar of Dantan at Sawri, in the district of Midnapore, is allowed leave on average pay for four days, under rule 81 (*b*) (*ii*) of the Fundamental Rules, with effect from the 24th August 1931.

Tippera.—No. 613.—8th September 1931.—Babu Kiran Chandra Datta, Sub-Registrar of Laksam, in the district of Tippera, is allowed leave on average pay for one month and eight days, under rule 81 (*b*) (*ii*) of the Fundamental Rules, with effect from the 7th September 1931, or from any subsequent date on which he may be relieved.

Tippera.—No. 614.—8th September 1931.—Maulvi A. B. Saiyid Rezai Karim, Sub-Registrar attached to Comilla, Tippera, is appointed to act as Sub-Registrar of Laksam in the same district, with effect from the date on which he joins the appointment, during the absence, on leave, of Babu Kiran Chandra Dutta, Sub-Registrar, or until further orders.

Mymensingh.—No. 615.—8th September 1931.—Babu John Ballav Chaudhuri, Sub-Registrar of Madan, in the district of Mymensingh, under orders of transfer to Madarganj in the same district, is allowed leave on average pay for thirty days, under rule 81 (*b*) (*ii*) of the Fundamental Rules, in extension of the leave granted to him in this department notification No. 582, dated the 28th August 1931.

Faridpur.—No. 616.—8th September 1931.—Maulvi Saiyid Mahmud, Sub-Registrar attached to Faridpur, is allowed leave on average pay for five days, under rule 81 (*b*). (*ii*) of the Fundamental Rules, with effect from the 26th June 1931.

Bakarganj.—No. 617. — 8th September 1931.—Maulvi Muhammad Ismail, Sub-Registrar of Patuakhali, in the district of Bakarganj, is allowed leave on average pay for seven days, under rule 81 (*b*) (*ii*) of the Fundamental Rules, with effect from the 25th August 1931.

Khulna.—No. 618.—8th September 1931.—Babu Phani Bhusan Ray, Sub-Registrar, of Satkhira, in the district of Khulna, is allowed leave on average pay for one month, under rule 81 (*b*) (*ii*) of the Fundamental Rules, with effect from the 17th August 1931.

Mymensingh.—No. 619.—12th September 1931.—Maulvi Khalilur Rahman Khan Eusofzai, Probationary Sub-Registrar of Mymensingh, is appointed to act, until further orders, as Second Joint Sub-Registrar of Kishoreganj in the same district, with effect from the 28th August 1931.

Mymensingh.—No. 620.—12th September 1931.—Babu Gopendra Nath Ray, Sub-Registrar attached to Mymensingh, on leave, is appointed to be Second Joint Sub-Registrar of Kishoreganj in the same district.

Dacca-Bakarganj.—No. 621.—12th September 1931.—Maulvi A. Y. M. Hafizur Rahman Chaudhuri, Sub-Registrar attached to Dacca, is appointed to act, until further orders, as Sub-Registrar of Bhandaria, in the district of Bakarganj, with effect from the date on which he joins the appointment.

Mymensingh.—No. 622.—12th September 1931.—This department notification No. 303, dated the 8th May 1931, appointing Babu Bankim Chandra Chakrabatti, Sub-Registrar of Iswarganj, in the district of Mymensingh, as Sub-Registrar of Gauripur in the same district, is cancelled.

Mymensingh.—No. 623.—12th September 1931.—This department notification No. 304, dated the 8th May 1931, appointing Babu Naresh Chandra Patranavis, Sub-Registrar of Gauripur, in the district of Mymensingh, as Sub-Registrar of Iswarganj in the same district, is cancelled.

Mymensingh.—No. 624.—12th September 1931.—Maulvi Khalilur Rahman Khan Eusofzai, officiating Second Joint Sub-Registrar of Kishoreganj, in the district of Mymensingh, is appointed to act as Sub-Registrar of Kishoreganj in the same district, with effect from the 3rd September 1931, in addition to his own duties, till relieved by Maulvi Muhammad Israil, Sub-Registrar of Dewanganj in the same district.

Dacca.—No. 625.—12th September 1931.—Maulvi A. M. Azaharul Islam Bhuiya, Sub-Registrar attached to Dacca, is appointed to act as Sub-Registrar of Sreenagar in the same district, with effect from the afternoon of the 26th August 1931, during the absence, on leave, of Maulvi Qazi Abdul Majid, Sub-Registrar, or until further orders.

Bakarganj. — No. 626. — 12th September 1931.—Babu Surendra Lal Dutta, Sub-Registrar, on leave, is appointed to be Joint Sub-Registrar of Jhalakati at Rajapur, in the district of Bakarganj.

This cancels this department notification No. 596, dated the 3rd September 1931, appointing Babu Surendra Lal Dutta, Sub-Registrar, on leave, as Sub-Registrar, Rahmatpur, Bakarganj.

Bakarganj.—No. 627. — 12th September 1931.—Babu Charu Kanta Sen, Joint Sub-Registrar of Jhalakati at Rajapur, in the district of Bakarganj, is appointed to be Sub-Registrar of Bhandaria in the same district.

Nadia.—No. 628.—14th September 1931.—Babu Jatindra Mohan Nath, Sub-Registrar of Kumarkhali, in the district of Nadia, is allowed leave on average pay for fifteen days, under rule 81 (*b*) (*ii*) of the Fundamental Rules, with effect from the 18th September 1931, or from any subsequent date on which he may be relieved.

Nadia.—No. 629.—14th September 1931.—Babu Narmada Ranjan Das Gupta, Sub-Registrar attached to Krishnagar, Nadia, is appointed to act as Sub-Registrar of Kumarkhali in the same district, with effect from the date on which he joins the appointment, during the absence, on leave, of Babu Jatindra Mohan Nath, Sub-Registrar, or until further orders.

S. AHMED,
Inspector-General of Regn., Bengal.

FINANCE DEPARTMENT.

Finance.

NOTIFICATIONS.

No. 663 T.F.—8th September 1931.—In exercise of the powers conferred by rules 41, 42 and 44 of the Civil Services (Classification, Control and Appeal) Rules published with the Government of India, Home Department, notification No. F. 9/3/30, dated the 19th June 1930, the Governor in Council and the Governor acting with his Ministers are pleased to sanction the following amendment to the Bengal Passage Rules, 1927:—

In line 5 of clause 3 of rule 2 *for* the words "a Second Class Passage" *read* "a Second Class A Passage."

No. 683 T.F.—8th September 1931.—The Governor in Council and the Governor acting with his Ministers are pleased to declare that rules 2, 3 and 4 published with this department notification No. 105 T.F., dated the 14th May 1927, should be held to have been cancelled.

Audit.

ADDENDUM AND CORRIGENDUM.

No. 3884 F.—12th September 1931.—The following correction, which has been authorised, is published for general information:—

Fundamental and Subsidiary Rules, 1st Edition (Reprint), 1929.

Page 380—Appendix 26.—*Insert* the following as rule 9 in the appendix:—

"These rules do not apply to journeys to obtain anti-rabic treatment which are governed by the rules contained in Appendix T to the Bengal Audit Manual."

E. N. BLANDY,
Secy. to the Govt. of Bengal.

COMMERCE DEPARTMENT.

NOTIFICATION.

No. 969 T.Com.—9th September 1931.—Whereas the period of one year granted under notification No. 1447 T.Com., dated the 26th September 1930, in extension of the period of six months granted under notification No. 946 Com., dated the 10th February 1930, and in extension of the period of two years prescribed under sub-clause (*l*) of clause 6 of the Berhampore Electric License, 1928, granted at Calcutta under Bengal Government notification No. 724 Com., dated the 8th February 1928, to Mr. Suresh Chandra Nag for the performance by the licensee of the obligations imposed on him by the aforementioned clause of the said license expired on the 7th August 1931, and whereas the licensee has failed to perform the said obligations within that time and has applied to the Government for a further extension of the period:

And whereas the Local Government may, under sub-section (*l*) of section 4 of the Indian Electricity Act, 1910 (IX of 1910), revoke the license:

Now, therefore, in exercise of the power conferred by sub-section (2) of section 4 of the said Act, the Governor in Council is pleased, on the application of the said licensee, to permit the license to remain in force up to the 29th February 1932, subject to the performance by the licensee of the said obligations.

E. N. BLANDY,
Secy. to the Govt. of Bengal.

DEPARTMENT OF AGRICULTURE AND INDUSTRIES.

Industries.

NOTIFICATION.

Minister-in-charge: The Hon'ble Khan Bahadur Maulvi K. G. M. Faroqui.

No. 351T.A.I.—7th September 1931.—Mr. Niranjan Ghosh is confirmed in his contract appointment of Mining Lecturer in the coal-fields of Bengal, with effect from the 1st November 1930.

L. R. FAWCUS,

Secy. to the Govt. of Bengal.

Orders by the Registrar of Co-operative Societies, Bengal.

No. 18-L.—5th September 1931.—Whereas I am of opinion, as the result of an enquiry held into the constitution, working and financial condition of the Sukrabad Joutha Dugdha Sarabaraha Samity (registered No. 234 of 1926), in the subdivision Sadar in the district of Dacca, under sub-section (*1*) of section 35 of the Co-operative Societies Act, II of 1912, that the society ought to be dissolved.

Now, therefore, in exercise of the power conferred by sub-section (*1*) of section 39 of the same Act, I hereby cancel the registration of the said society.

And further, in exercise of the power conferred by sub-section (*1*) of section 42 of the same Act, I hereby appoint the Inspector of Co-operative Societies, Dacca, to be liquidator of the said society.

No. 19-L.—5th September 1931.—Whereas I am of opinion, as the result of an enquiry held into the constitution, working and financial condition of the Aogram Bagbati Co-operative Bank (registered No. 256 of 1923), in the subdivision Sadar in the district of Burdwan, under sub-section (*1*) of section 35 of the Co-operative Societies Act, II of 1912, that the society ought to be dissolved.

Now, therefore, in exercise of the power conferred by sub-section (*1*) of section 39 of the same Act, I hereby cancel the registration of the said society.

And further, in exercise of the power conferred by sub-section (*1*) of section 42 of the same Act, I hereby appoint the Departmental Officer in charge of Burdwan Sadar Circle to be liquidator of the said society.

No. 20-L.—5th September 1931.—Whereas I am of opinion, as the result of an enquiry held into the constitution, working and financial condition of the Baismabdanga Co-operative Credit Society (registered No. 52 of 1915), in the subdivision Rampurhat in the district of Birbhum, under sub-section (*1*) of section 35 of the Co-operative Societies Act, II of 1912, that the society ought to be dissolved.

Now, therefore, in exercise of the power conferred by sub-section (*1*) of section 39 of the same Act, I hereby cancel the registration of the said society.

And further, in exercise of the power conferred by sub-section (*1*) of section 42 of the same Act, I hereby appoint the Departmental Officer in charge of Nalhati Circle to be liquidator of the said society.

No. 21-L.—5th September 1931.—Whereas I am of opinion, as the result of an enquiry held into the constitution, working and financial condition of the Darshadangerhat Co-operative Gramya Bank (registered No. 241 of 1917), in the subdivision Sadar in the district of Rajshahi, under sub-section (*1*) of section 35 of the Co-operative Societies Act, II of 1912, that the society ought to be dissolved.

Now, therefore, in exercise of the power conferred by sub-section (*1*) of section 39 of the same Act, I hereby cancel the registration of the said society.

And further, in exercise of the power conferred by sub-section (*1*) of section 42 of the same Act, I hereby appoint the Inspector of Co-operative Societies, Rajshahi, to be liquidator of the said society.

S. K. GANGULY,

Regr., Co-operative Societies, Bengal.

REVENUE DEPARTMENT.

Land Revenue.

NOTIFICATIONS.

Tippera. — No. 753T.R. — 9th September 1931.—Under section 3 of the Bengal Survey Act (Act V of 1875), the Governor in Council is pleased to order that a survey shall be made of all lands which are comprised in the Government estate "Joar Nasaraddi" bearing tauzi No. 2720 in the district of Tippera and that the boundaries of the estate, tenures, mauzas and fields be demarcated on the lands so to be surveyed.

No. 754T.R.—9th September 1931.—In exercise of the powers conferred by section 101 (*2*) (*d*) of the Bengal Tenancy Act 1885 (Act VIII of 1885), as amended up to date, the Governor in Council is pleased to order that a survey shall be made and a record-of-rights prepared in respect of all lands included within the boundaries of the Government estate "Joar "Nasaraddi" bearing tauzi No. 2720 in the district of Tippera.

The particulars to be recorded in the record-of-rights shall be the following:—

(*a*) the name of each tenant or occupant;

(*b*) the class or classes to which each tenant belongs, that is to say, whether he is a tenure-holder, raiyat holding at fixed rates, settled raiyat, occupancy raiyat, non-occupancy raiyat, or under-raiyat with or without a right of occupancy and if he is a tenure-holder, whether he is a permanent tenure-holder or not, and whether his rent is liable to enhancement during the continuance of his tenure;

(*c*) the situation and quantity and one or more of the boundaries of the land held by each tenant or occupier;

(*d*) the name of each tenant's landlord;

(*e*) the rent and cess lawfully payable by each tenant at the time the record-of-rights is being prepared;

(*f*) the amount payable in respect of any rights of pasturage, forest rights, rights over fisheries and the like at the time the record-of-rights is being prepared, the conditions and incidents appertaining to such rights and if the amount is a gradually increasing amount, the time at which and the increments by which it increases;

(*g*) the mode in which that rent has been fixed—whether by conduct, by order of a court, or otherwise;

(*h*) if the rent is a gradually increasing rent, the time at which and the steps by which it increases;

(*i*) the rights and obligations of each tenant and landlord in respect of—

(*i*) the use by tenants of water for agricultural purposes whether obtained from a river, jhil, tank or well or any other course of supply, and

(*ii*) the repair and maintenance of appliances for security a supply of water for the cultivation of the land held by each tenant, whether or not such appliances be situated within the boundaries of such land;

(*j*) the special conditions and incidents, if any, of the tenancy;

(*k*) any right-of-way or other easement attaching to the land for which a record-of-rights is being prepared;

(*l*) if the land is claimed to be held rent-free, whether or not rent is actually paid, and if not paid, whether or not the occupant is entitled to hold the land without payment of rent, and if so entitled, under what authority:

Provided that if lands are not used for purposes connected with agriculture or horticulture, it shall be sufficient to record that fact together with the prescribed particulars relating to the occupant, the landlord and the tenancy.

Jalpaiguri.—No. 777T.R.—11th September 1931.—Under section 3 of the Bengal Survey Act, 1875 (Act V of 1875), the Governor in Council is pleased to order that a survey shall be made of all lands comprised in the areas covered by the following Government estates, in the district of Jalpaiguri, and that the boundaries of estates, tenures, mauzas and fields be demarcated on the lands so to be surveyed:—

The Government estates 83, 84, 85, 86 and 87 of the Jalpaiguri Collectorate.

Jalpaiguri.—No. 778T.R.—11th September 1931.—Under section 3 of the Bengal Survey Act, 1875 (Act V of 1875), the Governor in Council is pleased to order that a survey shall be made of all lands comprised in the areas covered by the following tea estates, in the district of Jalpaiguri, and that the boundaries of estates, tenures, mauzas and fields be demarcated on the lands so to be surveyed:—

The tea estates are:—

Serial No.	Name of Garden.	Tauzi No.
1	... Barrons II	... 115
2	... Kalabari 1st	... 105
3	... Altadanga	... 107
4	... Jaldacca 1st	... 103
5	... Tasati	... 312
6	... Atiabari	... 339

Jalpaiguri.—No. 779T.R.—11th September 1931.—Under section 4 of the Bengal Survey Act (Act V of 1875), Mr. I. Newton, Extra Assistant Superintendent, is appointed to be an Assistant Superintendent of Surveys for the purpose of carrying out the survey directed to be made under Government notification Nos. 777-78T.R., dated 11th September 1931, in the district of Jalpaiguri.

Burdwan-Hooghly-Howrah. — No. 11500 L.R.—14th September 1931.—Babu Jitendra Nath Roy, Sub-Deputy Collector and Assistant Settlement Officer, Burdwan-Hooghly-Howrah, is allowed leave on average pay under rule 81 (*b*) (*ii*) of the Fundamental Rules, with effect from the 26th September 1931 or any subsequent date up to the 14th October 1931 (inclusive).

Land Acquisition.

NOTIFICATIONS.

Pabna.—No. 10300L.A.—20th August 1931.—Maulvi Abul Kasem Wajih-ud-din Ahmad, Deputy Magistrate and Deputy Collector, Pabna, is vested with the powers of Collector under the Land Acquisition Act, I of 1894, in the Sadar subdivision of that district.

Midnapore.—No. 11309L.A.—9th September 1931.—Babu Girija Bhusan Ghoshal, Deputy Magistrate and Deputy Collector, employed in the Sadar subdivision of the district of Midnapore, is vested with the powers of a Collector under Land Acquisition Act, I of 1894, in that subdivision.

Hooghly.—No. 11314L.A.—9th September 1931.—Whereas it appears to the Governor in Council that land is likely to be required to be taken by Government at the expense of the Serampore Municipality for a public purpose, viz., for widening Dr. Gopal Chandra Gossain Street, in the village of Serampore, jurisdiction list No. 17, thana Serampore, pargana Boro, district Hooghly, it is hereby notified that for the above purpose three pieces of land altogether measuring, more or less, 0·03 of an acre, bounded on the—

Plot No. 1:

North—By the house of Haridasi Dasi,
East—By Dr. Gopal Chandra Gossain Street,
South—By Rai M. C. Lahiri Bahadur Street,
West—By the land of Haridasi Dasi,

Plot No. 2:

North—By the house of Krishna Ghosh,
East—By Dr. Gopal Chandra Gossain Street,
South—By the house of Haridasi Dasi,
West—By the open land of late T. N. Lahiri and others,

Plot No. 3:

North—By the house of Gopeswar Das,
East—By Dr. Gopal Chandra Gossain Lane,
South—By the house of J. N. Gossain,
West—By the lands of J. N. Gossain, Santosh Kumar Sanyal and S. C. Roy,

are likely to be required within the aforesaid village of Serampore.

This notification is made, under the provisions of section 4 of Act I of 1894, to all whom it may concern.

A plan of the land may be inspected in the office of the Land Acquisition Officer, Serampore.

In exercise of the powers conferred by the aforesaid section, the Governor in Council is pleased to authorise the officers for the time being engaged in the undertaking, with their servants and workmen, to enter upon and survey the land and do all other acts required or permitted by that section.

Any person interested in the above land, who has any objection to the acquisition thereof, may, within thirty days after the date on which public notice of the substance of this notification is given in the locality, file an objection in writing before the Collector of Hooghly.

24-Parganas.—No. 11317L.A. — 9th September 1931.—Whereas it appears to the Governor in Council that land is likely to be required to be taken by Government at the expense of the Budge Budge Municipality for a public purpose, viz., for a pathway from Setua Road to M. N. Sarkar Road, in the village of Kalinagar Bade, jurisdiction list No. 7, thana Budge Budge, pargana Balia, district 24-Parganas, it is hereby notified that for the above purpose a piece of land measuring, more or less, 0·0357 of an acre, bounded on the—

North—By Setua road-side drain and by the lands of Sadhan Chandra Sadhu Khan, Kartick Chandra Chakravarti, Jangee Goala and Nabinuddin Mistri,

East—By road-side drain of Setua road and by the lands of Purna Chandra Das, Gobordhon Das and Rahamatulla Shaik,

South—By road-side drain of M. N. Sircar and by the lands of Purna Chandra Das, Gobordhon Das and Rahmatulla Shaik,

West—By the lands of Sadhan Chandra Sadhukhan, Kartick Chandra Chakravarti, Jangee Goala, Nobinuddin Mistri and road-side drain of M. N. Sircar,

is likely to be required within the aforesaid village of Kalinagar Bade.

This notification is made, under the provisions of section 4 of Act I of 1894, to all whom it may concern.

A plan of the land may be inspected in the office of the Chairman, Budge Budge Municipality.

In exercise of the powers conferred by the aforesaid section, the Governor in Council is pleased to authorise the officers for the time being engaged in the undertaking, with their servants and workmen, to enter upon and survey the land and do all other acts required or permitted by that section.

Any person interested in the above land, who has any objection to the acquisition thereof, may, within thirty days after the date on which public notice of the substance of this notification is given in the locality, file an objection in writing before the Collector of the 24-Parganas.

24-Parganas.—No. 11320L.A.—9th September 1931.—Whereas it appears to the Governor in Council that land is likely to be required to be taken by Government at the expense of the Bhatpara Municipality for a public purpose, viz., for straightening and widening the Surpara Lane, in the village of Authpore, jurisdiction list No. 16, thana Jagaddal, pargana Saidpur, district 24-Parganas, it is hereby notified that for the above purpose a piece of land measuring, more or less, 0·0826 of an acre, bounded on the—

North—By the lands of Panchanon Sur, Kumaresh Ch. Chatterjee and by the Surpara Lane,

East—By the Surpara Lane and by the lands of Sarat Chandra Roy, Panchanon Sur and Hara Mohan Ghose,

South—By the lands of Hara Mohan Ghose, Panchanon Sur and Sarat Chandra Roy and by the Ferry Fund Road,

West—By the Surpara Lane and Ferry Fund Road and by the lands of Kumaresh Chandra Chatterjee and Panchanon Sur,

is likely to be required within the aforesaid village of Authpore.

This notification is made, under the provisions of section 4 of Act I of 1894, to all whom it may concern.

A plan of the land may be inspected in the office of the Chairman of the Bhatpara Municipality.

In exercise of the powers conferred by the aforesaid section, the Governor in Council is pleased to authorise the officers for the time being engaged in the undertaking, with their servants and workmen, to enter upon and survey the land and do all other acts required or permitted by that section.

Any person interested in the above land, who has any objection to the acquisition thereof, may, within thirty days after the date on which public notice of the substance of this notification is given in the locality, file an objection in writing before the Collector of the 24-Parganas.

Calcutta.—No. 11323L.A.—9th September 1931.—Whereas it appears to the Governor in Council that land is likely to be required to be taken by Government at the expense of the Corporation of Calcutta, for a public purpose, viz., for the extension of the Tallah Pumping Station in Ward No. 30 of the Calcutta Municipality in the city of Calcutta, it is hereby

notified that for the above purpose a piece of land comprising a portion of premises No. 70/1, Barrackpore Trunk Road, measuring, more or less, 0·2024 of an acre, and bounded on the—

North and East—By the remaining portion of premises No. 70/1, Barrackpore Trunk Road,

South—By the land acquired under declaration No. 5050L.A., dated the 4th May 1925,

West—By Barrackpore Trunk Road,

is likely to be required within the aforesaid Ward No. 30 of the Calcutta Municipality in the city of Calcutta.

This notification is made, under the provisions of section 4 of Act I of 1894, to all whom it may concern.

A plan of the land may be inspected in the office of the Second Land Acquisition Collector at No. 5, Bankshall Street, Calcutta.

In exercise of the powers conferred by the aforesaid section, the Governor in Council is pleased to authorise the officers for the time being engaged in the undertaking, with their servants and workmen, to enter upon and survey the land and do all other acts required or permitted by that section.

Any person interested in the above land, who has any objection to the acquisition thereof, may, within thirty days after the date on which public notice of the substance of this notification is given in the locality, file an objection in writing before the Second Land Acquisition Collector at No. 5, Bankshall Street, Calcutta.

Calcutta.—No. 11326L.A.—9th September 1931.—Whereas it appears to the Governor in Council that land is likely to be required to be taken by Government at the expense of the Corporation of Calcutta for a public purpose, viz., for a bathing platform in Kamardanga Road in Ward No. 19 of the Calcutta Municipality in the city of Calcutta, it is hereby notified that for the above purpose a piece of land comprising a portion of premises No. 1, Kamardanga Road, measuring, more or less, 0·0165 of an acre, bounded on the—

North and East—By the remaining portion of premises No. 1, Kamardanga Road,

South—By municipal drain,

West—By Kamardanga Road,

is likely to be required within the aforesaid Ward No. 19 of the Calcutta Municipality in the city of Calcutta.

This notification is made, under the provisions of section 4 of Act I of 1894, to all whom it may concern.

A plan of the land may be inspected in the office of the Second Land Acquisition Collector at No. 5, Bankshall Street, Calcutta.

In exercise of the powers conferred by the aforesaid section, the Governor in Council is pleased to authorise the officers for the time being engaged in the undertaking, with their servants and workmen, to enter upon and survey the land and do all other acts required or permitted by that section.

Any person interested in the above land, who has any objection to the acquisition thereof, may, within thirty days after the date on which public notice of the substance of this notification is given in the locality, file an objection in writing before the Second Land Acquisition Collector at No. 5, Bankshall Street, Calcutta.

Calcutta.—No. 11329L.A.—9th September 1931.—Whereas it appears to the Governor in Council that land is likely to be required to be taken by Government at the expense of the Corporation of Calcutta for a public purpose, viz., for a proposed drain connecting two Corporation drains near the Eastern Bengal Railway staff quarters at Narkeldanga in Ward No. 28 of the Calcutta Municipality in the city of Calcutta, it is hereby notified that for the above purpose a piece of land comprising a portion of premises No. 7, Charakdanga Road, measuring, more or less, 0·0051 of an acre, and bounded on the—

North and South—By Corporation drains,

East and West—By the remaining portion of premises No. 7, Charakdanga Road,

is likely to be required within the aforesaid Ward No. 28 of the Calcutta Municipality in the city of Calcutta.

This notification is made, under the provisions of section 4 of Act I of 1894, to all whom it may concern.

A plan of the land may be inspected in the office of the Second Land Acquisition Collector at No. 5, Bankshall Street, Calcutta.

In exercise of the powers conferred by the aforesaid section, the Governor in Council is pleased to authorise the officers for the time being engaged in the undertaking, with their servants and workmen, to enter upon and survey the land and do all other acts required or permitted by that section.

Any person interested in the above land, who has any objection to the acquisition thereof, may, within thirty days after the date on which public notice of the substance of this notification is given in the locality, file an objection in writing before the Second Land Acquisition Collector at No. 5, Bankshall Street, Calcutta.

Calcutta.—No. 11332L.A.—9th September 1931.—Whereas it appears to the Governor in Council that land is likely to be required to be taken by Government at the expense of the Calcutta Improvement Trust for a public purpose, viz., for alignment No. II (Maniktala) in Ward No. XXVIII of the Calcutta Municipality, in the city of Calcutta, it is hereby notified that for the above purpose a piece of land comprising a portion of premises No. 41, Narkeldanga Main Road, measuring, more or less, 0·0798 of an acre, and bounded on the—

North—By Narkeldanga Main Road,

East—By municipal drain,

South—By the remaining portion of premises No. 41, Narkeldanga Main Road,

West—By a passage,

is likely to be required within the aforesaid Ward No. XXVIII of the Calcutta Municipality in the city of Calcutta.

This notification is made, under the provisions of section 4 of Act I of 1894, to all whom it may concern.

A plan of the land may be inspected in the office of the Second Land Acquisition Collector at No. 5, Bankshall Street, Calcutta.

In exercise of the powers conferred by the aforesaid section, the Governor in Council is pleased to authorise the officers for the time being engaged in the undertaking, with their servants and workmen, to enter upon and survey the land and do all other acts required or permitted by that section.

Any person interested in the above land, who has any objection to the acquisition thereof, may, within thirty days after the date on which public notice of the substance of this notification is given in the locality, file an objection in writing before the Second Land Acquisition Collector at No. 5, Bankshall Street, Calcutta.

Faridpur.—No. 11338L.A.—9th September 1931.—Whereas it appears to the Governor in Council that additional land is likely to be required to be taken by Government at the public expense for a public purpose viz., for level crossing No. 19 in connection with the construction of the Kalukhali-Bhatiapara Railway, in the village of Baharpur, jurisdiction list No. 156, thana Baliakandi, pargana Mahimsahi, district Faridpur, it is hereby notified that for the above purpose a piece of land measuring, more or less, 0·024 of an acre, 60 feet in length and 19 feet in width between chainages 47,128 and 47,188 in mile 9 of the railway alignment, is likely to be required within the aforesaid village of Baharpur.

This notification is made, under the provisions of section 4 of Act I of 1894, to all whom it may concern.

A plan of the land may be inspected in the office of the Special Land Acquisition Officer, Faridpur, as well as in that of the Chief Engineer, Eastern Bengal Railway, at 3, Koilaghat Street, Calcutta.

In exercise of the powers conferred by the aforesaid section, the Governor in Council is pleased to authorise the officers for the time being engaged in the undertaking, with their servants and workmen, to enter upon and survey the land and do all other acts required or permitted by that section.

Any person interested in the above land, who has any objection to the acquisition thereof, may, within thirty days after the date on which public notice of the substance of this notification is given in the locality, file an objection in writing before the Collector of Faridpur.

Calcutta.—No. 11357L.A.—10th September 1931.—Whereas it appears to the Governor in Council that land is likely to be required to be taken by Government at the expense of the Corporation of Calcutta for a public purpose, viz., for splaying off the corner opposite to No. 3, Royd Lane in Ward No. XV of the Calcutta Municipality in the city of Calcutta, it is hereby notified that for the above purpose a piece of land, being a portion of premises Nos. 14A, 14A/1, 14B/2, 14B/3, 14C, 14D and 14E, Royd Street, measuring, more or less, 1 chittak and 27 square feet, equivalent to 0·0017 of an acre, and bounded on the—

North and East—By the remaining portion of premises Nos. 14A, 14A/1, 14B/2, 14B/3, 14C, 14D and 14E, Royd Street,

South and West—By Royd Lane,

is likely to be required within the aforesaid Ward No. XV of the Calcutta Municipality in the city of Calcutta.

This notification is made, under the provisions of section 4 of Act I of 1894, to all whom it may concern.

A plan of the land may be inspected in the office of the First Land Acquisition Collector at No. 5, Bankshall Street, Calcutta.

In exercise of the powers conferred by the aforesaid section, the Governor in Council is pleased to authorise the officers for the time being engaged in the undertaking, with their servants and workmen, to enter upon and survey the land and do all other acts required or permitted by that section.

Any person interested in the above land, who has any objection to the acquisition thereof, may, within thirty days after the date on which public notice of the substance of this notification is given in the locality, file an objection in writing before the First Land Acquisition Collector at No. 5, Bankshall Street, Calcutta.

Calcutta.—No. 11360L.A.—10th September 1931.—Whereas it appears to the Governor in Council that land is likely to be required to be taken by Government at the expense of the Corporation of Calcutta, for a public purpose, viz., for widening the lane connecting Garcha Road with Garcha 1st Lane in Ward No. 27 of the Calcutta Municipality in the city of Calcutta, it is hereby notified that for the above purpose two pieces of land comprising portions of premises Nos. 56, Garcha Road and 55/1, Hazra Road and altogether measuring, more or less, 0·0134 of an acre, bounded on the—

Plot I

(portion of premises No. 56, Garcha Road):

North—By Garcha Road,

East and South—By the lane proposed to be widened,

West—By the remaining portion of premises No. 56, Garcha Road,

Plot II

(portion of premises No. 55/1, Hazra Road):

North—By Garcha Road,

East—By the remaining portion of premises No. 55/1, Hazra Road,

South and West—By the lane proposed to be widened,

are likely to be required within the aforesaid Ward No. 27 of the Calcutta Municipality.

This notification is made, under the provisions of section 4 of Act I of 1894, to all whom it may concern.

A plan of the land may be inspected in the office of the Second Land Acquisition Collector at No. 5, Bankshall Street, Calcutta.

In exercise of the powers conferred by the aforesaid section, the Governor in Council is pleased to authorise the officers for the time being engaged in the undertaking, with their servants and workmen, to enter upon and survey the land and do all other acts required or permitted by that section.

Any person interested in the above land, who has any objection to the acquisition thereof, may, within thirty days after the date on which public notice of the substance of this notification is given in the locality, file an objection in writing before the Second Land Acquisition Collector at No. 5, Bankshall Street, Calcutta.

Calcutta.—No. 11363L.A.—10th September 1931.—Whereas it appears to the Governor in Council that land is likely to be required to be taken by Government at the expense of the Calcutta Improvement Trust for a public purpose, viz., for alignment No. XX (Shambazar Street widening—East of Central Avenue) in Ward No. 1 of the Calcutta Municipality in the city of Calcutta, it is hereby notified that for the above purpose a piece of land, being premises No. 1, Sham Square East Lane, and measuring, more or less, 0·2541 of an acre, bounded on the—

North—By premises No. 2, Sham Square East Lane,

East—By a passage, premises No. 107/C, Shambazar Street, a passage, premises Nos. 108, 109 and 110, Shambazar Street,

South—By Sham Square South Lane,

West—By Sham Square East Lane,

is likely to be required within the aforesaid Ward No. I in the city of Calcutta.

This notification is made, under the provisions of section 4 of Act I of 1894, to all whom it may concern.

A plan of the land may be inspected in the office of the First Land Acquisition Collector at No. 5, Bankshall Street, Calcutta.

In exercise of the powers conferred by the aforesaid section, the Governor in Council is pleased to authorise the officers for the time being engaged in the undertaking, with their servants and workmen, to enter upon and survey the land and do all other acts required or permitted by that section.

Any person interested in the above land, who has any objection to the acquisition thereof, may, within thirty days after the date on which public notice of the substance of this notification is given in the locality, file an objection in writing before the First Land Acquisition Collector at No. 5, Bankshall Street, Calcutta.

Burdwan.—No. 11366L.A.—10th September 1931.—Whereas it appears to the Governor in Council that additional land is likely to be required to be taken by Government at the expense of the Asansol Municipality for a public purpose, viz., for the distribution system of the Asansol Water-supply Scheme in Railpar Bastee, in the village of Asansol Municipality, jurisdiction list No. 24, thana Asansol, pargana Shergarh, district Burdwan, it is hereby notified that for the above purpose a piece of land comprising parts of cadastral plots Nos. 3436 and 3457 and measuring, more or less, 0·0106 of an acre, is likely to be required within the aforesaid village of Asansol Municipality.

This notification is made, under the provisions of section 4 of Act I of 1894, to all whom it may concern.

A plan of the land may be inspected in the office of the Special Land Acquisition Officer, Burdwan, as well as in that of the Chairman, Asansol Municipality.

In exercise of the powers conferred by the aforesaid section, the Governor in Council is pleased to authorise the officers for the time being engaged in the undertaking, with their servants and workmen, to enter upon and survey the land and do all other acts required or permitted by that section.

Any person interested in the above land, who has any objection to the acquisition thereof, may, within thirty days after the date on which public notice of the substance of this notification is given in the locality, file an objection in writing before the Collector of Burdwan.

Calcutta.—No. 11427L.A.—11th September 1931.—Whereas it appears to the Governor in Council that land is likely to be required to be taken by Government at the expense of the Corporation of Calcutta for a public purpose, viz., for opening out a 40 feet road in continuation of the one of the same width running from Gariahat Road and constructed by the Hindusthan Co-operative Insurance Society, Limited, to meet another road constructed by them, in Ward No. XXVII of the Calcutta Municipality, in the city of Calcutta, it is hereby notified that for the above purpose a piece of land, being a portion of premises No. 46, Monoharpukur Road, and measuring, more or less, 0·1405 of an acre, bounded on the—

North—By premises Nos. 46/38 & 46/39, Gariahat Road,

East—By a 40 feet road,

South—By the remaining portion of premises No. 46, Monoharpukur Road,

West—By another 40 feet road constructed by the Hindusthan Co-operative Society, Ltd.,

is likely to be required within the aforesaid Ward No. XXVII of the Calcutta Municipality in the city of Calcutta.

This notification is made, under the provisions of section 4 of Act I of 1894, to all whom it may concern.

A plan of the land may be inspected in the office of the First Land Acquisition Collector, at No. 5, Bankshall Street, Calcutta.

In exercise of the powers conferred by the aforesaid section, the Governor in Council is pleased to authorise the officers for the time being engaged in the undertaking, with their servants and workmen, to enter upon and survey the land and do all other acts required or permitted by that section.

Any person interested in the above land, who has any objection to the acquisition thereof, may, within thirty days after the date on which public notice of the substance of this notification is given in the locality, file an objection in writing before the First Land Acquisition Collector, at No. 5, Bankshall Street, Calcutta.

Calcutta.—No. 11430L.A.—11th September 1931.—Whereas it appears to the Governor in Council that land is likely to be required to be taken by Government at the expense of the Corporation of Calcutta for a public purpose, viz., for widening a portion of Annada Banerjee Lane in Ward No. XXII of the Calcutta Municipality, in the city of Calcutta, it is hereby notified that for the above purpose a piece of land, being portions of premises Nos. 17 and 19, Ashutosh Mukherjee Road in plot No. I, and a portion of premises No. 4, Doctor Rajendra Road in plot No. II, and measuring, more or less, 3 cottahs 9 chittaks and 15 square feet equivalent to 0·0592 of an acre, bounded on the—

Plot No. I:

North—By Doctor Rajendra Road,
East and South—By Annada Banerjee Lane,
West—By Annada Banerjee Lane and the remaining portions of premises Nos. 17 and 19, Ashutosh Mukherjee Road,

Plot No. II:

North—By Doctor Rajendra Road,
East—By the remaining portion of premises No. 4, Doctor Rajendra Road,
South—By premises No. 25, Annada Banerjee Lane,
West—By Annada Banerjee Lane,

is likely to be required within the aforesaid Ward No. XXII of the Calcutta Municipality in the city of Calcutta.

This notification is made, under the provisions of section 4 of Act I of 1894, to all whom it may concern.

A plan of the land may be inspected in the office of the First Land Acquisition Collector, at No. 5, Bankshall Street, Calcutta.

In exercise of the powers conferred by the aforesaid section, the Governor in Council is pleased to authorise the officers for the time being engaged in the undertaking, with their servants and workmen, to enter upon and survey the land and do all other acts required or permitted by that section.

Any person interested in the above land, who has any objection to the acquisition thereof, may, within thirty days after the date on which public notice of the substance of this notification is given in the locality, file an objection in writing before the First Land Acquisition Collector, at No. 5, Bankshall Street, Calcutta.

Hooghly.—No. 11433L.A.—11th September 1931.—Whereas it appears to the Governor in Council that land is likely to be required to be taken by Government at the expense of the Serampur Municipality for a public purpose, viz., for the extension of the municipal passage to the south of the Nikasi drain of Goalapara Lane, Mahesh, towards the west to connect it with P. K. Das Lane, in the village of Mahesh, jurisdiction list No. 19, thana Serampur, pargana Boro, district Hooghly, it is hereby notified that for the above purpose a piece of land measuring, more or less, 0·02 acre, bounded on the—

North—By the land of Nanda Lal Dhara,
East—By the drain,
South—By the land of Nanda Lal Dhara,
West—By the P. K. Das Lane,

is likely to be required within the aforesaid village of Mahesh.

This notification is made, under the provisions of section 4 of Act I of 1894, to all whom it may concern.

A plan of the land may be inspected in the office of the Land Acquisition Officer, Serampore.

In exercise of the powers conferred by the aforesaid section, the Governor in Council is pleased to authorise the officers for the time being engaged in the undertaking, with their servants and workmen, to enter upon and survey the land and do all other acts required or permitted by that section.

Any person interested in the above land, who has any objection to the acquisition thereof, may, within thirty days after the date on which public notice of the substance of this notification is given in the locality, file an objection in writing before the Collector of Hooghly.

Calcutta.—No. 11436L.A.—11th September 1931.—Whereas it appears to the Governor in Council that land is likely to be required to be taken by Government at the expense of the Calcutta Improvement Trust, for a public purpose, viz., for alignment No. V (Maniktala) of the Calcutta Improvement Trust, in Ward No. 28 of the Calcutta Municipality in the city of Calcutta, it is hereby notified that for the above purpose a piece of land comprising premises No. 95 (old No. 78), Raja Rajendra Lal Mitra Road and measuring, more or less, 0·1384 of an acre, bounded on the—

North, East and South—By Municipal passage,
West—By premises No. 96, Raja Rajendra Lal Mitra Road,

is likely to be required within the aforesaid Ward No. 28 of the Calcutta Municipality in the city of Calcutta.

This notification is made, under the provisions of section 4 of Act I of 1894, to all whom it may concern.

A plan of the land may be inspected in the office of the Second Land Acquisition Collector, at No. 5, Bankshall Street, Calcutta.

In exercise of the powers conferred by the aforesaid section, the Governor in Council is pleased to authorise the officers for the time being engaged in the undertaking, with their servants and workmen, to enter upon and survey the land and do all other acts required or permitted by that section.

Any person interested in the above land, who has any objection to the acquisition thereof, may, within thirty days after the date on which public notice of the substance of this notification is given in the locality, file an objection in writing before the Second Land Acquisition Collector, at No. 5, Bankshall Street, Calcutta.

Hooghly.—No. 11439L.A.—11th September 1931.—Whereas it appears to the Governor in Council that land is likely to be required to be taken by Government at the expense of the Hooghly-Chinsurah Municipality for a public purpose, viz., for a passage to the municipal pail depot, in the village of Keota, jurisdiction list No. 82, thana Hooghly, pargana Arsa, district Hooghly, it is hereby notified that for the above purpose a piece of land measuring, more or less, 0·027 of an acre, bounded on the—

North—By the land of Debendra Nath Koer,
East—By the municipal pail depot,
South—By the municipal lane,
West—By the Shahgunj Road,

is likely to be required within the aforesaid village of Keota.

This notification is made, under the provisions of section 4 of Act I of 1894, to all whom it may concern.

A plan of the land may be inspected in the office of the Collector of Hooghly.

In exercise of the powers conferred by the aforesaid section, the Governor in Council is pleased to authorise the officers for the time being engaged in the undertaking, with their servants and workmen, to enter upon and survey the land and do all other acts required or permitted by that section.

Any person interested in the above land, who has any objection to the acquisition thereof, may, within thirty days after the date on which public notice of the substance of this notification is given in the locality, file an objection in writing before the Collector of Hooghly.

Calcutta.—No. 11442L.A.—11th September 1931.—Whereas it appears to the Governor in Council that land is likely to be required to be taken by Government at the expense of the Calcutta Improvement Trust for a public purpose, viz., for Alignment No. V (Maniktala) of the Calcutta Improvement Trust, in Ward No. 29 of the Calcutta Municipality in the city of Calcutta, it is hereby notified that for the above purpose a piece of land, comprising a portion of premises No. 1, Kankurgachi 1st Lane, and measuring, more or less, 0·4214 of an acre, bounded on the—

North—By Kankurgachi 3rd Lane,
East, South and West—By the remaining portion of premises No. 1, Kankurgachi 1st Lane,

is likely to be required within the aforesaid Ward No. 29 of the Calcutta Municipality in the city of Calcutta.

This notification is made, under the provisions of section 4 of Act I of 1894, to all whom it may concern.

A plan of the land may be inspected in the office of the Second Land Acquisition Collector, at No. 5, Bankshall Street, Calcutta.

In exercise of the powers conferred by the aforesaid section, the Governor in Council is pleased to authorise the officers for the time being engaged in the undertaking, with their servants and workmen, to enter upon and survey the land and do all other acts required or permitted by that section.

Any person interested in the above land, who has any objection to the acquisition thereof, may, within thirty days after the date on which public notice of the substance of this notification is given in the locality, file an objection in writing before the Second Land Acquisition Collector, at No. 5, Bankshall Street, Calcutta.

24-Parganas.—No. 11445L.A.—11th September 1931.—The Governor in Council is pleased to cancel so much of the notification No. 6013L.A., dated the 5th May 1930, under section 4 of the Land Acquisition Act, I of 1894, published at page 767, Part I of the *Calcutta Gazette* of the 15th idem, as relates to the two pieces of land, altogether measuring, 8·1622 acres, and bounded as described below, out of the total area of 16·3802 acres of the land required by the Nainati Municipality for a play ground and pasture, in the village of Naihati, jurisdiction list No. 3, thana Naihati, pargana Havilisahar, district 24-Parganas:—

Boundaries.

Plot A:

North—By the land of Rassick Shaik and by Bara Road,
East—By the lands of Rasick Shaik, Behari Lall Ghosh and Hiralal Dosad,
South—By the lands of Natabar Malik and Abdul Khan,
West—By Bara Road,

Plot B:

North—By the lands of Matuk Chandra Ghose, Sailendra Nath Basu and Nanda Rani Dasi,
East—By the lands of Gobardhan Shaik and Ekrandhi Shaik and by Bara Road,
South—By Bara Road,
West—By the remaining land notified under notification No. 6013L.A., dated the 5th May 1930.

Howrah.—No. 11451L.A.—11th September 1931.—The Governor in Council is pleased to cancel the notification No. 3576L.A., dated the 5th March 1931, under section 4 of the Land Acquisition Act, I of 1894, published at page 300, Part I of the *Calcutta Gazette* of the 12th idem, in respect of the proposed acquisition of 0·0004 of an acre of land required by the Howrah Municipality for easing out a bad corner at Madhusudan Biswas Lane, in the village of Howrah, pargana Boro, district Howrah.

Jalpaiguri.—No. 11454L.A.—11th September 1931.—The Governor in Council is pleased to cancel notification No. 4078L.A., dated the 21st March 1930, under section 4 of the Land Acquisition Act, I of 1894, published at pages 497-98, Part I of the *Calcutta Gazette* of the 27th idem, in respect of the proposed acquisition of 1·03 acres of land required by the Jalpaiguri Municipality for the construction of a cow slaughter house near Purana Masjid, in the village of Kharia, pargana Baikunthapur, district Jalpaiguri.

Burdwan.—No. 11457L.A.—11th September 1931.—Whereas it appears to the Governor in Council that land is likely to be required to be taken by Government at the public expense for a public purpose, viz., for constructing an approach channel of distributary No. 1A of distributary No. 1, branch canal, Damodar Canal Project, in the village of Babla, jurisdiction list No. 98, thana Galsi, pargana Bagha, district Burdwan, it is hereby notified that for the above purpose a piece of land comprising parts of cadastral plot Nos. 8, 12, 14 and 15 and measuring, more or less, 0·33 of an acre, is likely to be required within the aforesaid village of Babla.

This notification is made, under the provisions of section 4 of Act I of 1894, to all whom it may concern.

A plan of the land may be inspected in the office of the Special Land Acquisition Officer, Burdwan, as well as in that of the Executive Engineer, Damodar Canal Division, Burdwan.

In exercise of the powers conferred by the aforesaid section, the Governor in Council is pleased to authorise the officers for the time being engaged in the undertaking, with their servants and workmen, to enter upon and survey the land and do all other acts required or permitted by that section.

In exercise of the powers conferred by section 17 (*4*) of the Land Acquisition Act, I of 1894, as amended by Act XXXVIII of 1923, the Governor in Council is pleased to direct that the provisions of sections 5A of the Act shall not apply in this case.

Calcutta.—No. 11482L.A.—14th September 1931.—In exercise of the powers conferred by section 48 (*1*) of the Land Acquisition Act, I of 1894, the Governor in Council is pleased to withdraw from the acquisition of a piece of land being premises Nos. 30/A, 30/1A, 30/2A, 30/3A and 30/4A, Darpanarayan Tagore Street, and measuring, more of less, 13 cottahs 8 chittaks and 39 square feet of standard measurement, equivalent to 0·2240 of an acre, and bounded as described below, which was included in the area declared for acquisition under declaration No. 241L.A., dated the 7th January 1929, published at page 55, Part I of the *Calcutta Gazette* of the 10th idem, and required by the Calcutta Improvement Trust for Scheme No. XXVI (Darpanarayan Tagore Street to Pathuriaghata Street) in Ward No. V of the Calcutta Municipality in the town of Calcutta:—

North—By premises Nos. 29/6 and 29/7, Darpanarayan Tagore Street.

East—By Ganga Narayan Dutt Lane.

South—By Darpanarayan Tagore Street.

West—By premises No. 31, Darpanarayan Tagore Street, a common passage and premises No. 5/2, Lakhinarayan Mukherjee Lane.

Murshidabad.—No. 11497L.A.—14th September 1931.—Whereas it appears to the Governor in Council that land is likely to be required to be taken by Government at the public expense for a public purpose, viz., for new ghat yard of the Eastern Bengal Railway at Lalgola Ghat in the village of Kodalkati, pargana Islampur, zilla Murshidabad, it is hereby notified that for the above purpose a strip of land measuring, more or less, 1·994 acres, equivalent to 6 bighas 11 chittaks, and starting from chainage 1,713 feet from the facing point of Shekalipur Ghat line which is 1,436 feet north of the railway, 141st mile post, and deviating towards west with a length of 1,175 feet where the proposed railway line terminates and breadth varying from 30 feet to 100 feet, is likely to be required within the aforesaid village of Kodalkati.

This notification is made, under the provisions of section 4 of Act I of 1894, to all whom it may concern.

In exercise of the powers conferred by the aforesaid section, the Governor in Council is pleased to authorise the officers for the time being engaged in the undertaking, with their servants and workmen, to enter upon and survey the land and do all other acts required or permitted by that section.

In exercise of the powers conferred by section 17 (*4*) of the Land Acquisition Act of 1894, as amended by Act XXXVIII of 1923, the Governor in Council is pleased to direct that the provisions of section 5A of the Act shall not apply in this case.

A plan of land may be inspected in the office of Subdivisional Officer, Lalbagh.

Jessore.—No. 11504L.A.—14th September 1931.—Mr. R. K. Mitra, I.C.S., Subdivisional Officer, Narail, in the district of Jessore, is vested with the powers of a Collector under the Land Acquisition Act, I of 1894, in that subdivision.

Burdwan.—No. 11530L.A.—14th September 1931.—The Governor in Council is pleased to cancel the notification No. 5852L.A., dated the 1st May 1931, under section 4 of the Land Acquisition Act, published at page 727, Part I of the *Calcutta Gazette* of the 8th idem, in respect of the proposed acquisition of 0·033 of an acre of land required by the Burdwan Municipality for a road from Paikmarapara Lane No. 1 to Paikmarapara Lane No. 2, in the village of Burdwan, pargana Burdwan, district Burdwan.

ERRATUM.

Dacca.—No. 9902L.A. — 13th August 1931. —In lines 3 and 4 of notification No. 7800L.A., dated the 20th June 1931, published at page 746, Part I of the *Calcutta Gazette* of the 25th idem, *for* the words "employed as Sadar Subdivisional Officer in the district of Dacca" *read* "employed in the Sadar subdivision of the district of Dacca."

DECLARATIONS.

Mymensingh.—No. 11311L.A.—9th September 1931.—Whereas it appears to the Governor in Council that land is required to be taken by Government at the expense of the district board of Mymensingh for a public purpose, viz., for Husenpur village road, in the villages of Nagra and Husenpur, jurisdiction list Nos. 326 and 319, thana Netrokona, pargana Roydum, district Mymensingh, it is hereby declared that for the above purpose a piece of land comprising portions of cadastral plots Nos. 211, 252 and 254, measuring, more or less, 0·43 of an acre, and bounded on the—

North and South—By the portions of district settlement plots Nos. 211 of mauza Husenpur and 252 and 254 of mauza Nagra,

East—By the district board road,

West—By the district settlement plots Nos. 151 and 146 of mauza Husenpur,

is required within the aforesaid villages of Nagra and Husenpur.

This declaration is made, under the provisions of section 6 of Act I of 1894, to all whom it may concern.

A plan of the land may be inspected in the office of the Collector of Mymensingh.

Nadia. — No. 11335L.A. — 9th September 1931.—Whereas it appears to the Governor in Council that land is required to be taken by Government at the expense of the Birnagar Municipality for a public purpose, viz., for conversion of an insanitary area into a sanitary area, in the village of Birnagar, pargana Mamjoania, zilla Nadia, it is hereby declared that for the above purpose a piece of land comprising cadastral plots Nos. 1747, 1078, 1079, 1080, 1080/3658, 1082, 1083, 1086, 1087, 1088, 1089/1855, 1089, 1090, 1091, 1092, 1093, 1121, 1749, 1751, 1752, 1753, 1753/1901, 1754, 1755, 1738, 1739, 1740, 1741, 1742, 1743, 1744, 1745, 1746, 1748, 1756, 1757, 1758, 1759, 1760, 1761, 1762, 1763, 1764, 1765, 1766, 1766/1886, 1767, 1768, 1769, 1770, 1771, 1772, 1773 and 1088/1864, and measuring, more or less, 37·30 acres, is required within the aforesaid village of Birnagar.

This declaration is made, under the provisions of section 6 of Act I of 1894, to all whom it may concern.

A plan of the land may be inspected in the office of the Subdivisional Officer, Ranaghat.

24-Parganas. — No. 11448L.A.—11th September 1931.—Whereas it appears to the Governor in Council that land is required to be taken by Government at the expense of the Naihati Municipality for a public purpose, viz., for play ground and pasture, in the village of Naihati, jurisdiction list No. 3, thana Naihati, pargana Havilisahar, zilla 24-Parganas, it is hereby declared that for the above purpose a piece of land, comprising cadastral survey plots Nos. 4452, 4363, 4365, 4366, 4055, 4066, 4068, 4067, 4064, 4065, 4364 and portions of 4069, 4076, 4074 and 4070, and measuring, more or less, 8·218 acres, bounded on the—

North—By the lands of Panchumani Dasi, Shama Charan Ghose, Atul Chandra Ghose, Tarapada Ghose, Ekrandhi Shaik and Matuk Ghose,

East—By the lands of Fakir Shaik, Sarge Teli, Sattya Charan Roy, Matuk Ghose, Badalmoni Dasi and Kali Charan Ghose,

South—By the lands of Panchumani Dasi, Shama Charan Ghose, Atul Chandra Ghose and by Bara road,

West—By the lands of Amullya Ratan Ghosh Mazumdar, Atul Chandra Ghose, Gopal Chandra Parsee and Atul Krishna Ghose and others and by Eastern Bengal Railway approach road,

is required within the aforesaid village of Naihati.

This declaration is made, under the provisions of section 6 of Act I of 1894, to all whom it may concern.

A plan of the land may be inspected in the office of the Chairman, Naihati Municipality, as well as in that of the Sepcial Land Acquisition Officer at Alipore, 24-Parganas.

Howrah.—No. 11485L.A. — 14th September 1931.—Whereas it appears to the Governor in Council that land is required to be taken by Government at the expense of the Howrah Municipality for a public purpose, viz., for easing out a corner at the junction of Babudanga Road and Stalkart Lane, in the village of Salkea, pargana Paikan, zilla Howrah, it is hereby declared that for the above purpose a piece of land measuring, more or less, 0·0057 of an acre, bounded on the—

North and East—By the lands of Debendra Nath Dhang,

South—By Babudanga Road,

West—By Stalkart Lane,

is required within the aforesaid village of Salkea.

This declaration is made, under the provisions of section 6 of Act I of 1894, to all whom it may concern.

A plan of the land may be inspected in the office of the Collector of Howrah.

Howrah.—No. 11488L.A.—14th September 1931.—Whereas it appears to the Governor in Council that land is required to be taken by Government at the expense of the Bally Municipality for a public purpose, viz., for the proposed night-soil depot in Ward No. IV of the municipality in the village of Belur, pargana Boro, zilla Howrah, it is hereby declared that for the above purpose a piece of land measuring, more or less, 0·14 of an acre, bounded on the—

North, South and West—By the municipal drain,

East—By the garden of Chintamoni Bazal,

is required within the aforesaid village of Belur.

This declaration is made, under the provisions of section 6 of Act I of 1894, to all whom it may concern.

A plan of the land may be inspected in the office of the Collector of Howrah.

Birbhum.—No. 11491L.A.—14th September 1931.—Whereas it appears to the Governor in Council that additional land is required to be taken by Government at the expense of the Koma union board for a public purpose, viz., for the construction of a road from Kutra to Koma in the village of Kutra, jurisdiction list No. 89, in thana Suri, pargana Khatanga, district Birbhum, it is hereby declared that for the above purpose a piece of land measuring, more or less, 0·002 of an acre, comprising portion of settlement plot No. 862, is required within the aforesaid village of Kutra.

This declaration is made, under the provisions of section 6 of Act I of 1894, to all whom it may concern.

A plan of the land may be inspected in the office of the Collector of Birbhum.

Faridpur.—No. 11494L.A.—14th September 1931.—Whereas it appears to the Governor in Council that extra land is required to be taken by Government at the public expense for a public purpose, viz., for a drain in Kalukhali Station Yard, (mile 1), level crossing No. 6 in mile 4, level crossing No. 14 in mile 8, road diversion in mile 9, level crossings Nos. 20 and 21, road diversion and formation in mile 10, level crossings Nos. 21A and 22 and formation in mile 11, formation and level crossing No. 24 in mile 12, road diversion in Maliagram Station Yard (mile 16), level crossings Nos. 32 and 33 and formation in mile 17, level crossing No. 35 in mile 18, level crossing No. 35A in mile 19, level crossing No. 35B in mile 20, level crossing No. 37 in mile 21, level crossings Nos. 38 and 39 in mile 22, level crossing No. 40 and formation in mile 23, level crossing No. 41 in mile 24, level crossings Nos. 43A and 44 in mile 27, level crossing No. 45 and road diversion in mile 28, level crossing No. 52 in mile 31, formation in mile 34, level crossing No. 62A in mile 36, road diversion in mile 39, level crossing No. 68 in mile 40, formation in mile 43, level crossing No. 73 and formation in mile 44 and Bhatiapara Ghat Station Yard in mile 46, in connection with the construction of the Kalukhali-Bhatiapara Railway, in the villages of Hudarmaliat and Surjyadia (jurisdiction list Nos. 390 and 361, respectively, thana Pangsa, parganas Belgachi and Mahimshahi), villages of Narayanpur, Baradi, Baharpur, Faridpur, Tentulia, Bhar Ramdia, Kupdi, Danga, Ratimohan, Char Naopara, Naopara, Loujana Asapur, Char Loujana, and Mathurapur (jurisdiction list Nos. 154, 155, 156, 157, 172, 171, 174, 217, 219, 220, 221, 223, and 224, respectively, thana Baliakandi, parganas Mahimsahi, Nasibsahi, Nasaratsahi, Naldi and Gangapath), villages of Gopalpur, Lakshmandia, Mirer Kapashati, Khoksahat, Bauna, Ghoshpur, Amgram, Bara Baikhir, Sahasrail, Banamalipur and Binnahuri (jurisdiction list Nos. 45, 36, 47, 49, 48, 124, 165, 183, 207, 245 and 246, respectively, thana Bhushna, parganas Satair and Naldi), and villages of Biswanathpur, Narail, Bagjhapa, Khanerhat and Barasur (jurisdiction list Nos. 4, 5, 56, 59 and 62, respectively, thana Muksudpur, parganas Satair, Naldi, and Nasti), in the district of Faridpur, it is hereby declared that for the above purpose plots of land comprising portions of cadastral plots Nos. 402 of village Hudarmaliat, 833, 830, 814, 815, and 816 of village Surjyadia, 158 and 157 of village Narayanpur, 92, 93, 100, 102, 105, 101, 106, 111, 112, 113, 126, 130 and 131 of village Baradi, 1418, 1419, 1505, 1496, 1681, 1686, 1506, 1500, 1502, 1705, 1707, 1711, 1712, 1713, 1706, 1710, 2670, 2669, 2756, 2818, 2590, 2656 and 2819 of village Baharpur, 432, 533, 554, and 555 of village Faridpur, 415, 414, 413, 410, 412, 602 and 608, of village Tentulia, 30, 19 and 20 of village Bhar Ramdia, 99, 91, 71, 72, 75 and 102 of village Kupdi, 1275, 268, 266, 262, 261, and 403 of village Danga Hatimohan, 40 of village Char Naopara, 149, 147, 145, 144, 161, 163, 171, 172, 170, 168, 190, 196, 195, 194, 201, 202, 151, 153, 154, 148, 158, 160, 162, 174 and 173 of village Naopara, 387, 388, 389, 345, 311, 312, 392, 393, 400, 401, 399, 398, 426, 406, 427, 454, 457, 455, 456, 461, 463, 460, 464, 465, 872, 874, 873, 1237 and 871 of village Loujana Asapur, 344 and 343 of village Char Loujana, 642, 646, 645, 644, 643, 714, 1836, 1837, 1838, 1219, 1483, 1487 and 1685 of village Mathurapur, 379 of village Gopalpur, 122, 130, 517, 399, 403, 398, 397, 400, 764, 765, 769 and 770, of village Lakshmandia, 6, 7, 9, 178 and 176 of village Mirer Kapashati, 519, 429, 430, 432, 433, 310, 419, 434, 435, and 436 of village Khoksahat, 27, 38, 29 and 32 of village Bauna, 1917, 922, 920, 921, 918, 1815, 1816, 2548, 2563, 2573 and 2613 of village Ghoshpur, 241 and 239 of village Amgram, 1487, 1484, 1391, 1483, 1392, 1395, 1396, 1398, 1399, 1400, 1401, 1372, 1375, 1373, 1353 and 1355 of village Bara Baikhir, 378, 377, 380, 276 and 382 of village Sahasrail, 740 of village Banamalipur, 10, 14, 15 and 19 of village Binnahuri, 196, 197 and 198 of village Biswanathpur, 394 and 681 of village Narail, 214, 215, 216, 220, 219, 218, 221, 313, 335, 336, 337, 341, 340, 339, 342, 344, 683, and 682 of village Bagjhapa, 771, 772, 1760, 775, 776, 1590, 1591, 1592, 1605, 1606, 1604, 1603, 1597, 1598, 1601 and 1602 of village Khanerhat and 89, 121, 120, 122, 117, 124, and 123 of village Barasur and altogether measuring, more or less, 15·382 acres, are required within the aforesaid villages.

This declaration is made, under the provisions of section 6 of Act I of 1894, to all whom it may concern.

Plans of the land may be inspected in the office of the Special Land Acquisition Officer, Faridpur, as well as in that of the Chief Engineer, Eastern Bengal Railway, at No. 3, Koilaghat Street, Calcutta.

Mymensingh.—No. 11527L.A.—14th September 1931.—Whereas it appears to the Governor in Council that land is required to be taken by Government at the expense of the Delduar union board, for a public purpose, viz., for the Delduar Village Road, in the village of Delduar, jurisdiction list

No. 151, in thana Tangail, pargana Atia, district Mymensingh, it is hereby declared that for the above purpose two pieces of land comprising portions of cadastral plots Nos. 1414, 1444 and 1443 and measuring, more or less, 0.14 of an acre, bounded on the—

Block A:

North and South—By portions of district settlement plot No. 1414 of mauza Delduar,
East—By portion of district settlement plot No. 1449 of mauza Delduar,
West—By halot,

Block B:

North—By portions of district settlement plots Nos. 1444 and 1443 of mauza Delduar,
East—By portion of district settlement plot No. 1438 of mauza Delduar,
South—By portions of district settlement plots Nos. 1442 and 1419 of mauza Delduar.
West—By portion of district settlement plot No. 1448 of mauza Delduar,

are required within the aforesaid village of Delduar.

This declaration is made, under the provisions of section 6 of Act I of 1894, to all whom it may conern.

A plan of the land may be inspected in the office of the Collector of Mymensingh.

Forests.

ERRATUM.

No. 11369For.—10th September 1931.—In column 2 of the schedule under notification No. 9658For., dated the 7th August 1931, published at page 959, Part I of the *Calcutta Gazette* of the 13th August 1931, *for* the figure "3414" *substitute* the figure "3419."

Jurisdiction.

NOTIFICATION.

Chittagong.—No. 11537Jur.—14th September 1931.—In exercise of the power conferred by sub-section (*1*) of section 8 of the Code of Criminal Procedure, 1898 (Act V of 1898), and in supersession of all previous notifications on the subject relating to the area included within the Cox's Bazar subdivision of the Chittagong district and to the boundaries of that area, the Governor in Council is pleased to declare that the limits of that subdivision shall include the local areas of the following police-stations:—

Cox's Bazar police-station—Notification, dated the 11th September 1888.
Ramoo police-station—Notification No. 2482 J., dated the 30th March 1905.
Maheskhal police-station—Notification, dated the 11th September 1888.
Kutubdia police-station—Notification No. 2482J., dated the 20th March 1905.
Teknaf police-station—Notification No. 4058Pl., dated the 11th September 1931.
Ukhia police-station—Notification No. 4057Pl., dated the 11th September 1931.
Chakaria police-station—Notification, dated the 11th September 1888.

Excluded Area.

NOTIFICATION.

Darjeeling.—No. 749T.R. — 9th September 1931.—In exercise of the power conferred by section 15 of the Bengal Municipal Act, 1884 (Bengal Act III of 1884), the Governor in Council is pleased to make the following amendment in the rules published with notifications Nos. 205T.R., dated the 12th May 1927, and 204T.R., dated the 12th May 1927, for the conduct of elections of Commissioners of the Darjeeling and Kurseong Municipality, respectively, as subsequently amended:—

Amendment.

In clause (*3*) of rule 2 *for* the word "occupies" *substitute* the words "lives in."

H. C. V. PHILPOT,
Secy. to the Govt. of Bengal.

IRRIGATION DEPARTMENT.

Establishment.

NOTIFICATIONS.

No. 19.—9th September 1931. — Mr. Prabhat Chandra Ray, Executive Engineer, is granted, under rule 81 (*b*) (*i*) of the Fundamental Rules, leave on average pay for one month, with effect from the 8th August 1931.

No. 20.—9th September 1931.—Mr. G. B. Mandal, Assistant Executive Engineer, is transferred, in the interests of the public service, from the Dredger to the Cossye Division to hold charge of the division, during the absence, on leave, of Mr. Prabhat Chandra Ray, Executive Engineer, or until further orders.

No. 21.—9th September 1931.—Mr. G. B. Mandal, Assistant Executive Engineer, is granted, under rule 81 (*b*) (*i*) of the Fundamental Rules, leave on average pay for eight months, with effect from the 8th September 1931, or such subsequent date as he may avail himself of it.

No. 22.—10th September 1931.—Mr. Sunny Gupta, Assistant Executive Engineer, was, on appointment to the Indian Service of Engineers, posted to the office of the Superintending Engineer, Southern Circle, where he remained attached up to the 16th April 1931.

No. 23.—10th September 1931.—Mr. Sunny Gupta, Assistant Executive Engineer, is transferred, in the interests of the public service, from the office of the Superintending Engineer, Southern Circle, to the Canals Division.

Irrigation.

NOTIFICATION.

No. 18-I.—8th September 1931.—The following draft of amendment, which, in exercise of the powers conferred by sections 78 and 99 of the Bengal Irrigation Act, 1876 (Bengal Act III of 1876), the Governor in Council intends to make in the rules and rates for the supply of water from the Bakreswar Canal (published in Bengal Government, Irrigation Department, notification No. 14-I., dated the 11th August 1930, at pages 1312-17, Part I of the *Calcutta Gazette* of the 21st idem) is hereby published for the information of persons likely to be affected thereby.

II. The draft will be taken into consideration on or after the 17th October, 1931, and any objections or suggestions received by the undersigned before that date will be duly considered :—

Draft amendment.

For the schedule of rates for water supplied from the Bakreswar Canal in the said rules and rates, *substitute* the following :—

Schedule of rates for water supplied from the Bakreswar Canal.

	Per season*. Rs. A.
For water supplied on a lease for a term of years—supply given from 16th June to 15th November of each year ..	4 8
The rate is due in two equal instalments on the 1st of January and the 1st of February of each year : Provided that when the sum payable by any lessee is less than Rs. 10, the whole amount shall be due on the 1st of January each year.	
For water supplied on a covering lease to irrigate lands for which a preliminary application for a lease for a term of years has been received and failing the completion of the same. The rate is due as in the case of a lease for a term of years	5 0
	Per acre.
For water supplied on a season lease for the irrigation of any crops between 16th November and 15th June ..	5 0
The rate is payable on 1st July following.	
For the unauthorised use of water or for the waste of water such rate may be charged as determined by the Divisional Canal Officer under rule 21, subject to a maximum of Rs. 7-8 per acre or Rs. 3 per 10,000 cubic feet if taken into tanks, etc. Such rate shall be due on presentation of the notice of assessment to the person assessed.	

*NOTE.—Those taking leases during the season of 1931-32 only shall be given leases for five years at Re. 1-8 for the current year 1931-32, Rs. 3 for 1932-33, and Rs. 4-8 per annum for each of the the three following years, viz., 1933-34, 1934-35, 1935-36, and the rate for covering leases will be 50 per cent. higher, i.e., Rs. 2-4.

H. C. V. PHILPOT,
Secy. to the Govt. of Bengal.

TREASURY NOTICE.

Orders by the Deputy Accountant-General, Bengal.

The Treasury, 2nd September 1931.

It is notified that the refund order book No. 501 containing 50 orders is in use by the Income-tax Officer, Central Salaries Circle, Calcutta, with effect from the 26th August 1931.

K. R. RAMA AYYAR,
Dy. Accountant-General, Bengal.

SHERIFF'S OFFICE, THE 27TH AUGUST 1931.

Notice is hereby given that the Fifth Criminal Sessions of the year 1931 of the High Court of Judicature at Fort William in Bengal for the town of Calcutta and Factory of Fort William and the places subordinate thereto, will be held at the Court House, in the town of Calcutta, on Monday, the 7th day of December next, at 11 o'clock in the forenoon, and thenceforward from day to day until the said sessions be over. And it is hereby proclaimed that all persons who are to prosecute any of the prisoners to be brought up for trial at the said sessions be present then and there to prosecute.

P. N. TAGORE, *Sheriff.*

সরিফ আফিস, সন ১৯৩১ সাল, তারিখ ২৭শে আগষ্ট।

সকলকে সমাচার দেওয়া যাইতেছে যে সুবে বাঙ্গালার ফোর্ট উইলিয়ম দুর্গের অধীন সহর কলিকাতার ও অন্যান্য স্থানের ফৌজদারী বিচার নিষ্পত্তি জন্য আগামী সন ১৯৩১ সালের ৭ই ডিসেম্বর, সোমবার বেলা ১১ ঘটিকার সময় এবং যে পর্য্যন্ত সেশিয়ানের কার্য্য শেষ না হয় প্রতিদিন উক্ত সময়ে কলিকাতায় হাইকোর্টের আপন আদালত ঘরে সন ১৯৩১ সালের পঞ্চম ক্রিমিনেল সেশিয়ান বসিবেক এবং এতদ্দ্বারা প্রচার করা যাইতেছে যে, যে সকল ব্যক্তি কোন কয়েদির বিরুদ্ধে ফৌজদারী মিছিল করিবেক তাহারা উক্ত স্থানে উক্ত সময়ে হাজির থাকিয়া মোকদ্দমা করে, ইতি।

পি, এন, ঠাকুর,
সরিফ।

HIGH COURT NOTICES.

Original Side.

Calcutta, the 7th September 1931.

Mr. Satis Chandra Mitra, Registrar in Insolvency, High Court, Original Side, having been granted leave preparatory to retirement as from the 22nd November 1931, the Hon'ble the Chief Justice has appointed Mr. Arthur Lowe Collet, Solicitor, to officiate as Registrar in Insolvency as from the 23rd November 1931, until further order.

Calcutta, the 10th September 1931.

The Hon'ble the Chief Justice of the High Court of Judicature at Fort William in Bengal has appointed Arthur Hunter of 61 and 62, Lincoln's Inn Fields, London, W.C.2, a Solicitor of the Supreme Court of Judicature in England, a Commissioner within all parts of England to take affidavits or solemn affirmations or declarations in all suits, matters and proceedings in the Calcutta High Court and also the acknowledgments of married women in respect of property in India.

By order,
N. GHATAK, *Registrar (offg.).*

English Department—Civil

The 10th September 1931.

No. 12617E.—The following rule amending the rules relating to the qualifications, admission and certificates, etc., of pleaders in courts subordinate to the High Court having been made by the High Court of Judicature at Fort William in Bengal, under section 6 of the Legal Practitioners Act, 1879 (XVIII of 1879), is published for general information. The rule will come into force with effect from the 1st January 1932:—

Rule.

(CIVIL).

I.

In Rule 2 (slip), Chapter XI (revised), Volume I, of the Court's General Rules and Circular Orders, Civil—

(*i*) *insert* the words "or in the Courts of the Presidency Magistrates, Calcutta" after the words "to practise in his Court" in sub-rules (*b*) and (*c*);

(*ii*) *insert* the words "or is ordinarily practising in the Courts of the Presidency Magistrates, Calcutta" after the word "standing" in line 8 of sub-rule (*c*);

(*iii*) *insert* the words "or the Chief Judge, Court of Small Causes, Calcutta, as the case may be" after the words "District Judge" in line 2 of sub-rule (*l*) as well as in the amendment made therein by item II of Rule No. 14 of 1931.

II.

In Rule 13, *ibid*—

(*i*) *insert* the words "or the Imperial Bank of India, Calcutta, in case he shall intend ordinarily to practise in the Court of Small Causes, Calcutta, or the Courts of the Presidency Magistrates, Calcutta" after the word "practise" in line 5;

(*ii*) *insert* the words "or a provisional certificate showing that he has passed the examination qualifying himself for obtaining the diploma" after the word "diploma" in line 7;

(*iii*) *insert* the words "or the Chief Judge, Court of Small Causes, Calcutta, as the case may be" after the words "District Judges" in line 6 of the Note.

III.

In Rule 14, *ibid*—

(*i*) *insert* the words "or provisional certificate" after the word "diploma" in line 2;

(*ii*) *insert* the words "or to the Chief Judge, Court of Small Causes, Calcutta, if he desires ordinarily to practise in his Court or the Courts of the Presidency Magistrates, Calcutta" after the word "practise" in line 5;

(*iii*) *insert* the words "or the Chief Judge, as the case may be" after the word "Judge" in line 5;

(*iv*) *insert* the words "The same form shall be used by the Chief Judge with suitable modifications" at the end of the Note.

IV.

In Rule 15, *ibid*, *insert* the words "or Chief Judge" after the word "Judge" in line 4.

V.

In Rule 18, *ibid*, *insert* the words "or the Chief Judge, Court of Small Causes, Calcutta, as the case may be" after the words "District Judge" in line 3.

VI.

In Rule 19, *ibid*—

(*i*) *insert* the words "or the Chief Judge, Court of Small Causes, Calcutta" after the words "District Judge" in line 4.

(*ii*) *number* the existing Note as "Note 1" and *insert* the following as "Note 2":—

"NOTE 2.—The Chief Presidency Magistrate, Calcutta, is authorised under section 7 of the Legal Practitioners Act, 1879, to renew the certificates of practice of Pleaders and Mukhtars at the time ordinarily practising in the jurisdiction of any of the Presidency Magistrates' Courts in Calcutta (Notification dated the 1st February 1900)."

VII.

In Rule 20, *ibid*, *insert* the words "or the Chief Judge, Court of Small Causes, Calcutta, or other officer authorised to renew certificates" after the words "District Court' in line 3.

VIII.

In Rule 28, *ibid*, *insert* the words "or the Chief Judge, Court of Small Causes, Calcutta, as the case may be" after the words "District Judge" in lines 5 and 7.

IX

Cancel Rule 30, *ibid*, and *substitute* therefor the following:—

"30. A Pleader or Mukhtar desirous of practising in any district other than that in which his certificate was last renewed, shall apply to the District Judge of such district for the entry of his name in the district roll of Pleaders and Mukhtars. Similarly, a Pleader ordinarily practising in the Court of Small Causes, Calcutta, who desires to practise in any district or *vice versa* shall apply to the District Judge concerned or the Chief Judge, Court of Small Causes, Calcutta, as the case may be, for the entry of his name in the district roll of Pleaders or in the roll of Pleaders maintained by the Chief Judge. Before complying with the application the District Judge or the Chief Judge shall satisfy himself by such enquiries as he may think fit as to the applicant's identity and previous good conduct."

X

In Rule 37, *ibid*—

(*i*) *insert* the words "or the Chief Judge, Court of Small Causes, Calcutta, as the case may be" after the words "District Judges" in line 3.

(*ii*) *insert* the words "and the Chief Judge" after the words "District Judges" in lines 4-5.

XI

(*i*) *Insert* the words "and the Chief Presidency Magistrate, Calcutta" after the word "Magistrates" in the heading above Rule 39, *ibid;*

(*ii*) *Insert* the following at the end of Rule 39, *ibid*:—

"Similarly, the Chief Judge, Court of Small Causes, Calcutta, will inform the Chief Presidency Magistrate, Calcutta, of the names of Pleaders who may enrol themselves in his Court, or whose certificates may be renewed by him."

XII.

In Rule 42 (*a*), *ibid*—

cancel the words "All District Judges and all Munsifs at out stations" and *substitute* therefor the words "All Judicial Officers."

XIII.

Number the existing Note to Rule 48, *ibid*, as "Note I" and *insert* the following as Note II:—

"NOTE II.—The recognised clerks of pleaders practising in the Court of Small Causes, Calcutta, will be governed by the rules framed by that Court."

By order of the High Court,

W. McC. SHARPE, *Registrar.*

Calcutta Bar Council.

The 10th September 1931.

The rules prescribed by clause (*b*) of Rule 1 of the rules framed by the Bar Council under section 9 of the Indian Bar Councils Act (Act XXXVIII of 1926) and published on the 25th July 1928 in the *Calcutta and Assam Gazettes*, are amended by the Bar Council with the previous sanction of the High Court of Judicature at Fort William in Bengal as follows:—

Amendments.

That for sub-rule 16 of Rule 1 of Chapter XIV of the Appellate Side Rules, the following sub-rules be substituted:—

"(16) Upon compliance with the aforesaid rules, the applicant shall have to appear, on the expiration of the aforesaid articles or study in Chambers, as the case may be, at an examination in the following subjects:—

Code of Civil Procedure.
Code of Criminal Procedure.
Limitation Act.
Provincial Small Cause Courts Act.
Bengal Tenancy Act (portions dealing with procedure).
Indian Succession Act (portions dealing with procedure).
Registration Act (portions dealing with procedure).
Bengal, Agra and Assam Civil Courts Act—Chapters II, III and IV.
Full Bench decisions of the Calcutta High Court—For fifteen years immediately preceding the examination.
Decisions reported in the I. L. R. Calcutta Series—For ten years immediately preceding the examination.
Calcutta High Court Appellate Side Rules—Chapters IV and V and VII to XI.

(16A) The applicant shall at the said examination produce, for the inspection of the Court, his note-book containing his notes of arguments in at least twelve Civil and twelve Criminal cases heard on the Appellate Side of the High Court, at the hearing whereof he personally attended during the period of his articles.

(16B) Proficiency in the subjects specified in sub-rule (16) and the notes and attendance referred in sub-rule (16A) shall be taken into consideration at the said examination.

(16C) Should the applicant satisfactorily pass the said examination and if the Court be satisfied as to his fitness and capacity, a certificate shall be granted to him in the following form:—

> It is hereby certified that A. B. has fulfilled the conditions entitling him to apply to be enrolled as an Advocate of this Court under the Indian Bar Councils Act (XXXVIII of 1926), and is a fit and proper person to be admitted to practise as such Advocate.
>
> Sd. C. D.,
>
> A Judge of the High Court".

S. K. DUTT,

for *Secretary, Calcutta Bar Council.*

SMALL CAUSE COURT NOTICE.

The 11th September 1931.

Notice is hereby given, under Act IX of 1887, that the Judge of Small Cause Court, Dacca and Munshigunge, will, in the month of September 1931, sit in the Court on the undermentioned dates:—

In Munshigunge Small Cause Court—From 21st to 26th September 1931.

In Dacca Small Cause Court—The rest of the working days of the month.

S. SIL,

Small Cause Court Judge.

ORDERS BY COMMISSIONERS OF DIVISIONS.

Burdwan Division—Chinsura.

No. 2772J.G. — 9th September 1931.—Maulvi Syed Abu Sayeed, Sub-Deputy Collector and Circle Officer, Raipur, Bankura, is allowed leave on average pay for fifteen days, under rule 81 (*b*) (*ii*) of the Fundamental Rules, with effect from the 3rd September 1931.

No. 1923L.S.-G.—10th September 1931.—It is hereby notified for general information that, under rule 5 (*1*) of the rules issued under Government notification No. 764T.M., dated the 7th September 1910, the following amendments to the existing by-laws of the Howrah district board are confirmed:—

Delete ";" after the word "Road" in clause 4 (*a*) of by-law No. 1 and *add* "or a road transferred to a union board under section 33 of the Village Self-Government Act, 1919."

No. 2788J.G.—10th September 1931.—Babu Sridhar Mazumdar, Sub-Deputy Collector and Sub-Deputy Magistrate, posted to this division under Government notification No. 7979A., dated the 4th September 1931, is posted to the Asansol subdivision in the district of Burdwan on general duty, *vice* Babu Anubhuti Bhattacharjee, transferred.

No. 2793J.G. — 10th September 1931.—Maulvi Muhammed Abdul Khaliq, Sub-Deputy Collector and Sub-Deputy Magistrate, posted to this division under Government notification No. 7979A., dated the 4th September 1931, is posted to the Contai subdivision in the district of Midnapore on general duty.

No. 2798J.G.—10th September 1931.—Babu Anubhuti Bhattacharjee, Sub-Deputy Collector and Sub-Deputy Magistrate, Asansol, Burdwan, is transferred to the Sadar subdivision of the district of Hooghly on circle work, *vice* Babu Nirmal Kumar Sen, transferred.

No. 2803J.G. — 10th September 1931.—Maulvi Abdul Karim, No. I, Sub-Deputy Collector and Circle Officer, Contai, Midnapore, is allowed leave on average pay for six weeks, under rule 81 (*b*) (*ii*) of the Fundamental Rules, with effect from the 27th October 1931.

No. 2807J.G. — 10th September 1931.—Maulvi Khurshed Ali, Sub-Deputy Collector and Sub-Deputy Magistrate, posted to this division under Government notification No. 7979A., dated the 4th September 1931, is posted to the Contai subdivision in the district of Midnapore on circle work, *vice* Babu Sailesh Chandra Chatterji, reverted to general duty.

L. B. BURROWS, *Commissioner (offg.)*.

Burdwan, the 7th September 1931.

It is hereby notified for general information that, under section 13 of the Bengal Village Self-Government Act, 1919 (Bengal Act V of 1919), read with rule 35 of the rules for the election and appointment of members of union boards, etc., Maulvi Mohammad Yusuf has been appointed to be a member of the Khirgram union board in police-station Mongalkot in the Katwa subdivision in the district of Burdwan, *vice* Babu Tara Pada Chatterjee, deceased.

H. C. BOSE,

District Magistrate (offg.).

Howrah, the 8th September 1931.

Under section 6, sub-section (*3*) of the Bengal Village Self-Government Act, 1919, Munshi Reajah Mullick of Argori is appointed a member of Andul union board in the district of Howrah, in place of Munshi Abdul Kaher Middey, deceased.

M. B. DUTTA, for *District Magistrate*.

Chinsura, the 10th September 1931.

It is hereby notified for general information, under rule 3 of the rules for managing committees of Government High School, that the following gentlemen have been appointed as members of the managing committee of the Hooghly Branch School:—

The District Magistrate of Hooghly, President (*ex-officio*).

The Head Master of the School, Vice-President and Secretary (*ex-officio*).

The Assistant Head Master of the School, representative of the teaching staff.

Khan Bahadur Mozuharal Anwar Chaudhury, Vice-President of Moslem Educational Society, Hooghly, and representative of the guardians of Moslem pupils.

Babu Jogendra Lal Chaudhury, Zamindar and Vakil, representative of the guardians of Hindu pupils and representative of donors.

The Subdivisional Officer, Sadar, Hooghly (*ex-officio*), the officer other than the inspecting officer of the Education Department.

G. C. MAJUMDAR, for *District Magistrate*.

Chittagong Division—Chittagong.

No. 3411G.—9th September 1931.—It is hereby notified for general information that Rai Bhudhar Das Bahadur, Babu Sachindra Kumar Roy and Mrs. K. S. Chakrabotti are reappointed to be non-official visitors of the Comilla Jail in the district of Tippera for a further term of two years with effect from the dates noted against their names—

Rai Bhudhar Das Bahadur—12th September 1931.

Babu Sachindra Kumar Roy—30th September 1931.

Mrs. K. S. Chakrabotti—30th September 1931.

No. 3415G.—10th September 1931.—Maulvi Amir Ali, Sub-Deputy Collector, Chittagong, is allowed leave on average pay for six weeks, under rule 81 (*b*) (*ii*) of the Fundamental Rules, with effect from the 1st October 1931.

W. H. NELSON, *Commissioner*.

Chittagong, the 5th September 1931.

No. 5105.—It is hereby notified for general information that, under sub-section (2) of section 6 of the Bengal Village Self-Government Act, 1919 (Bengal Act V of 1919), the following gentlemen have been duly elected to be members of union boards within the different thanas in the Sadar "A" subdivision of the district of Chittagong:—

Double Moorings police-station.

Kattali union board No. I.

Maulvi S. M. Ruhul Amin Choudhury.
Babu Bagala Charan Das.
Babu Jatindra Mohan Majumdar.
Munshi Ahmed Kabir Choudhury.
Munshi Ahmedar Rahaman.
Munshi Ebadullah.

Agrabad union board No. II.

Munshi Ahmed Hussain.
Munshi Abdul Karim.
Munshi Md. Ebrahim, contractor.
Munshi Ahmed Ali.
Maulvi Abdul Razzak Choudhury, B.A.
Munshi Abdur Rashid Serang.

Halisahar union board No. III.

Munshi Abu Jafar Meah.
Munshi Badar Samad.
Munshi Ali Meah Sarkar.
Munshi Md. Saleh Zahur.
Munshi Nazir Ahmed.
Munshi Amir Ahmed.

Patenga union board No. IV.

Munshi Jebal Mulluk.
Munshi Nazu Meah Sadagar.
Munshi Hamidulla Talukdar.
Munshi Bashirullah.
Maulvi Ebadullah.
Munshi Md. Nasim.

Sitakunda police-station.

Saidpur union board No. I.

Munshi Sheikh Abdul Aziz Choudhury.
Munshi Sheikh Jalal Ahmed Choudhury.
Munshi Sheikh Abdul Aziz Bhuiya.
Munshi Magbul Ahmed.
Munshi Mir Hamidar Rahaman Choudhury.
Babu Benode Behari Dewanjee.

Baraiyadhala union board No. II.

Maulvi Muhammad Shafi Choudhury.
Babu Jagat Chandra De.
Munshi Muhammad Bashirullah.
Munshi Siddique Ahmed, vendor.
Munshi Md. Osi Meah.
Munshi Khalilur Rahaman.

Sitakunda union board No. III.

Munshi Karimullah Choudhury.
Maulvi Fazlur Rahaman Choudhury.
Munshi Madinullah Bhuiya.
Munshi Abdul Aziz Sadagar.
Munshi Nur Ahmed Choudhury.
Rai Sahib Har Kishore Adhikari.

Muradpur union board No. IV.

Munshi Abdul Bari Bhuiya.
Munshi Maklasar Rahaman.
Babu Mohan Bashi Pal.
Munshi Sabad Ahmed Choudhury.
Munshi Md. Hussain.
Munshi Sayed Ahmed.

Barabkunda union board No. V.

Munshi Abdul Rahaman.
Babu Gagan Chandra Bardhan.
Babu Sarat Chandra Nath.
Maulvi Md. Aurangzeb Choudhury.
Munshi Faiz Ahmed Choudhury.
Maulvi Md. Abul Khair.

Bansbhariya union board No. VI.

Munshi Md. Mustafa Choudhury.
Mufti Md. Ali Neyaj Choudhury.
Babu Kamini Kumar Nath Mahajan.
Munshi Ramjan Ali.
Munshi Jan Ali Meahji.
Munshi Wajullah.

Kumira union board No. VII.

Munshi Yakub Ali.
Babu Paresh Nath Bhowmik.
Munshi Yar Muhammad Choudhury.
Babu Barada Charan Roy.
Babu Raj Kumar Das.
Munshi Fazlar Rahaman.

Sonaicheri union board No. VIII.

Munshi Mazarullah Matbar.
Munshi Md. Ishaque.
Munshi Nural Haque Sikdar.
Maulvi Ahmed Meah Choudhury.
Munshi Gulam Gous Choudhury.
Munshi Abdul Hakim Choudhury.

Bhatiyari union board No. IX.

Munshi Tobarak Ali Choudhury.
Munshi Fazlar Rahaman Choudhury.
Munshi Jan Meah.
Munshi Md. Naser Choudhury.
Munshi Khairati Meah.
Munshi Golam Rahaman Choudhury.

Mirsarai police-station.

Karerhat union board No. I.

Munshi Siddiquer Rahaman.
Munshi Abdur Rashid Muherror.
Munshi Sheikh Ahmed.
Munshi Haji Hashmatullah Choudhury.
Babu Jogendra Chandra Choudhury.
Munshi Abedar Rahaman Khondakar.

Hinguli union board No. II.

Munshi Abdul Karim Sadagar.
Babu Prasanna Kumar De.
Babu Beni Madhav De.
Maulvi Abdul Latif.
Munshi Habibullah Meah.
Munshi Meher Ali Pandit.

Zorwarganj union board No. III.

Maulvi Ali Akbar Choudhury.
Babu Dinabandhu Choudhury.
Munshi Hafez Ahmed.
Babu Nishi Chandra Bhadury.
Munshi Abdur Rashid Choudhury.
Babu Sarat Chandra Barua.

Dhoom union board No. IV.

Maulvi Mahiuddin Ahmed Choudhury.
Munshi Fazar Rahaman.
Munshi Abdul Bari Bhuiya.
Munshi Sultan Ahmed Choudhury.
Munshi Aminullah Master.
Munshi Mazarullah Meah

Osmanpur union board No. V.

Munshi Sheikh Sayedar Rahaman Choudhury.
Munshi Mulkutar Rahaman.
Munshi Md. Waseque.
Munshi Abdur Rahaman Kerani.
Munshi Sona Meah.
Babu Sarada Kumar De.

Ichakhali union board No. VI.

Munshi Abdul Sobhan Muhurrer.
Munshi Md. Isaque Bhuiya.
Munshi Shamsul Haque Bhuiya.
Munshi Abdul Kaleque Choudhury.
Munshi Abdul Latif.
Munshi Mazharullah.

Katacherra union board No. VII.

Maulvi Asharaf Ali Kazi.
Babu Bepin Behari Bhowmik
Munshi Abdul Latif Muherrer.
Munshi Sheikh Moksad Ahmed Choudhury.
Munshi Lakiatullah
Munshi Abdul Hakim.

Durgapur union board No. VIII.

Babu Har Kumar Choudhury.
Babu Raj Kumar Chakravarty.
Babu Rasik Chandra Das.
Munshi Jan Meah Matbar.
Babu Bepin Behari Majumdar.
Babu Jamini Kumar Chakravarty.

Mirsarai union board No. IX.

Maulvi Mujibul Haque, B.A.
Munshi Siddiquer Rahaman.
Babu Mahendra Kumar De.
Babu Jnanada Charan Pal Choudhury.
Munshi Abdul Wahed.
Maulvi Md. Nurul Haque.

Mithanala union board No. X.

Babu Ramesh Chandra Rai Choudhury.
Babu Ramesh Chandra Choudhury.
Munshi Osman Ghani.
Munshi Abdul Latif Kerani.
Maulvi Jonab Ali.
Babu Naba Chandra Choudhury.

Maghadia union board No. XI.

Munshi Sayedar Rahaman.
Babu Sarat Chandra Nath Master.
Munshi Ali Azam Choudhury.
Maulvi Serajaddin Ahmed Choudhury.
Munshi Md. Ismail.
Munshi Abdul Basi Choudhury.

Khaiyacherra union board No. XII.

Munshi Abdul Aziz Choudhury.
Munshi Abdul Manan Meah.
Munshi Ali Ahmed, son of Abdul Matbar.
Maulvi Badiul Allam *alias* Bindu Meah Master.
Munshi Abdur Rahaman.
Munshi Ali Ahmed, son of Md. Wasel Bhuiya.

Mayani union board No. XIII.

Munshi Abdul Jabbar Matbar.
Maulvi Nural Haque Choudhury.
Haji Azizar Rahaman.
Munshi Abdul Gani Bhuiya.
Munshi Abdul Wadud Choudhury.
Babu Rajani Kanta Sil.

Haidkandi union board No. XIV.

Munshi Oli Ahmed Choudhury.
Munshi Abdul Hadi Bhuiya.
Munshi Abdul Gafur Meah.
Munshi Oli Ahmed, son of Jabed Ali.
Munshi Md. Ismail.
Munshi Oli Ahmed, son of Fateh Ali.

Wahedpur union board No. XV.

Maulvi Sultan Ahmed, B.L.
Munshi Md. Bashirullah Choudhury.
Munshi Abdul Wahab.
Munshi Md. Habibullah Bhuiya.
Munshi Bazlur Rahaman Choudhury.
Munshi Md. Ebrahim.

Panchalaish police-station.

Sholasahar union board No. I.

Munshi Siddique Ahmed, contractor.
Munshi Manu Meah.
Munshi Abdul Jalil.
Munshi Saleh Ahmed Choudhury.
Munshi Haji Abdul Latif.
Munshi Abdur Rahaman.

Panchalaish union board No. II.

Munshi Nazir Ahmed.
Munshi Jan Ali, contractor.
Babu Pran Hari Acherjee.
Munshi Fazar Ali Khan.
Munshi Jahir Ahmed.
Munshi Ahmed Hussain.

Chandgaon union board No. III.

Munshi Nazu Meah.
Munshi Abdul Hamid.
Munshi Osi Meah Choudhury.
Munshi Jahiruddin Ahmed.
Munshi Akbar Ali Khan.
Munshi Abul Khair Choudhury.

Mohara union board No. IV.

Munshi Amin Sarif Choudhury.
Maulvi Amir Ali Khan Choudhury.
Munshi Haji Nazir Ali.
Babu Annada Charan Dewanjee.
Munshi Jebal Hussain Kajee.
Munshi Hedayet Ali.

Bakalia union board No. V.

Munshi Salamat Ali Khan.
Munshi Amir Hussain
Munshi Amin Sarif, contractor.
Munshi Imam Sarif Sadagar.
Munshi Nezamat Ali.
Maulvi Abdur Rahaman.

Hathazari police-station.

Faradabad union board No. I.

Munshi Nur Ali Meah Choudhury.
Munshi Abdul Haque Choudhury.
Munshi Chunnu Meah Choudhury.
Munshi Khairazzaman
Babu Bepin Chandra Chakravarty.
Munshi Nabin Khan Choudhury.

Dalai union board No. II.

Munshi Saleh Ahmed Choudhury.
Munshi Ahmed Meah Choudhury.
Munshi Abdul Hakim Choudhury.
Munshi Sayed Abdul Hye.
Munshi Ahmedar Rahaman Choudhury.
Babu Nishi Chandra Mahajan.

Mirzapur union board No. III.

Munshi Fazar Ali.
Munshi Abdul Bari.
Munshi Abdul Khaleque.
Babu Manmohan Das.
Munshi Nazir Ahmed Choudhury.
Munshi Nabid Ali.

Gumanmardan union board No. IV.

Maulvi Kabbad Ahamed Chowdhury.
Hazi Md. Yusuf Meah.
Munshi Ashraf Ali.
Maulvi Md. Idris Meah Chowdhury.
Maulvi Hashmat Ali.
Hazi Abdul Jabbar Chowdhury.

Hathazari union board No. V.

Munshi Ashanullah.
Munshi Khaje Ali Chowdhury.
Babu Aparna Charan Mohajan.
Maulvi Abdul Latif, B.L.
Munshi Abdul Aziz.
Munshi Sultan Ahmed.

Mekhal union board No. VI.

Munshi Mobarek Ali Chowdhury.
Babu Mohendra Kumar Mohajan.
Maulvi Syed Abdul Hoque.
Babu Ramesh Chandra Mohajan.
Maulvi Abdur Rahaman, B.L.
Munshi Hashmat Ali Khan.

North Madarsha union board No. VII.

Munshi Amjad Ali.
Munshi Abdul Kader.
Munshi Nazir Ahmed.
Munshi Abdul Kader Chowdhury.
Munshi Muhammad Ismail.
Munshi Aminar Rahaman.

Fatehpur union board No. VIII.

Munshi Izzat Ali.
Babu Nabin Chandra Barua.
Munshi Belayet Ali.
Munshi Khalilar Rahaman.
Munshi Abdul Gani.
Dr. Md. Yusuf.

Pahartali union board No. IX.

Maulvi Abdur Rajjak, B.A.
Munshi Basirulla.
Babu Ram Chandra Chakrabarty.
Munshi Moshraf Ali.
Munshi Omra Meah.
Munshi Alimulla.

Chikandandi union board No. X.

Munshi Mahammad Ishaque.
Munshi Makhlesur Rahman.
Babu Dwijendra Lal Ghose.
Munshi Abdul Gani.
Munshi Amanat Ali Khan.
Munshi Kalu Meah.

South Madarsha union board No. XI.

Babu Nagendra Kumar Chowdhury.
Munshi Md. Ismail.
Munshi Shona Meah.
Munshi Ali Ahmad.
Munshi Mokhlesur Rahman.
Munshi Tamizuddin.

Shikarpur union board No. XII.

Munshi Nur Ahamed.
Munshi Abdul Rashid.
Hazi Nazu Meah Sowdagar.
Babu Ganesh Chandra Biswas.
Munshi Ala Meah, son of Mobarek Ali.
Munshi Osman Ali.

Fatikcheri police-station.

Dantmara union board No. I.

Munshi Tofail Ahamed.
Munshi Abdul Hashim.
Munshi Abdul Aziz.
Munshi Nurazzama Choudhury.
Maulvi Badarazzama Chowdhury.
Munshi Karam Ali.

Narayan Hat union board No. II.

Babu Chandra Kumar Sikdar.
Munshi Mahammad Ismail.
Babu Nibaran Chandra Nandi.
Munshi Ahamadar Rahaman.
Munshi Abdul Hamid *alias* Hasi Meah.
Munshi Kala Meah.

Bhujpur union board No. III.

Babu Harish Chandra Kabiraj.
Babu Man Mohan De.
Maulvi Abdus Salam.
Munshi Abdul Hamid Master.
Munshi Aman Ali Tendal.
Munshi Faiz Ahamed Meah.

Harualcheri union board No. IV.

Munshi Akmal Haji.
Munshi Abdul Bari.
Munshi Fazu Meah Matbar.
Babu Kamini Kumar Sarkar.
Munshi Abdul Rashid Chowdhury.
Munshi Abdus Sobhan Chowdhury.

Paindong union board No. V.

Munshi Fazal Hoque.
Munshi Sultan Ahmed Chowdhury, son of Ahsanullah Chowdhury.
Munshi Forok Ahmed Chowdhury.
Munshi Gura Meah.
Munshi Sultan Ahmed Chowdhury, son of Jobad Ali.
Munshi Mafazzal Ahamed.

Kanchannagar union board No. VI.

Munshi Sirajul Islam.
Maulvi Azizar Rahaman Chowdhury.
Maulvi Ahamed Hossain Chowdhury.
Maulvi Makhelsur Rahman Chowdhury.
Maulvi Mahamudar Rahaman Chowdhury.
Maulvi Keramat Ali.

Bibirhat union board No. VII.

Babu Mahendra Kumar Chowdhury.
Babu Debendra Nath Chowdhury.
Babu Purna Chandra Pal Chowdhury.
Babu Jatindra Mohan Seth.
Munshi Siddique Ahamed Chowdhury.
Babu Rajani Kanta Mohajan.

Sundarpur union board No. VIII.

Maulvi Sultan Ahamed Chowdhury, B.L.
Munshi Junab Ali Chowdhury.
Munshi Annar Ali.
Munshi Ahamed Hossain.
Munshi Abdus Sobhan Sarkar.
Munshi Sultan Ahamed Chowdhury.

Suabil union board No. IX.

Munshi Abbas Ali.
Munshi Fazoo Meah.
Munshi Fazal Hoque.
Munshi Jamal Ahmed Chowdhury.
Munshi Saleh Ahmed Chowdhury.
Munshi Sayed Abdur Rahaman.

Doulatpur union board No. X.

Maulvi Hafezar Rahman Chowdhury.
Munshi Thanda Meah Chowdhury.
Munshi Ashraf Ali.
Munshi Abdul Hye Chowdhury.
Munshi Amjad Ali.
Munshi Makbul Ahmed.

Lelang union board No. XI.

Babu Sasti Charan Dhar.
Maulvi Abdul Majid Chowdhury.
Munshi Naju Meah Talukdar.
Munshi Abul Khair.
Babu Nutan Chandra Dhar.
Munshi Siddique Ahamed.

Nanupur union board No. XII.

Maulvi Ahamed Shamsul Anwar.
Munshi Fazal Rahman.
Munshi Md. Ismail.
Munshi Sayed Mahabub Sobhani.
Munshi Bacha Meah.
Munshi Khalilar Rahaman.

Roshangiri union board No. XIII.

Munshi Raja Meah Chowdhury.
Munshi Abdul Jalil Chowdhury.
Babu Mahim Chandra Deb.
Munshi Md. Ismail Chowdhury.
Munshi Ahmed Meah.
Munshi Abdul Jalil Chowdhury.

Baktapur union board No. XIV.

Munshi Lutfar Rahaman Chowdhury.
Munshi Aminar Rahaman Chowdhury.
Munshi Abdul Baset.
Maulvi Fazal Bari Chowdhury.
Babu Chaitanya Charan Barua.
Munshi Abdul Wahed.

Dharmapur union board No. XV.

Munshi Bazlul Karim.
Munshi Abdus Samad.
Munshi Kabir Ahamed Chowdhury.
Munshi Ramju Meah.
Munshi Abdul Hakim.
Babu Rajani Kanta Chowdhury.

Rauzan police-station.

Haladia union board No. I.

Maulvi Sultan Ahamed.
Maulvi Ruhul Amin Choudhury.
Munshi Bazalar Rahaman.
Munshi Khalilor Rahaman.
Munshi Abdul Karim.
Munshi Hafezor Rahaman.

Dabua union board No. II.

Babu Barada Charan Dhar.
Babu Jatra Mohan De.
Babu Upendra Chandra Dhar.
Munshi Siddique Ahamed Choudhury.
Babu Nishi Chandra Choudhury.
Babu Barada Charan Das.

Chikdair union board No. III.

Munshi Shona Mia Choudhury.
Babu Abhoya Charan Acherjee.
Maulvi Manir Ahamed Master.
Babu Umesh Chandra Pal.
Munshi Abdul Majid.
Babu Raj Kamal Mallik.

Gahira union board No. IV.

Munshi Abdul Rashid.
Munshi Ali Mia Pandit.
Munshi Muhammad Idris.
Maulvi Fazal Ahamed Choudhury.
Munshi Inuch Mia Choudhury.
Munshi Ganimat Khan.

Sultanpur union board No. V.

Maulvi Abu Muhammad Hossain.
Maulvi Abul Kassem.
Munshi Hashmat Ali Choudhury.
Babu Birendra Lal Das.
Munshi Abdul Karim Master
Munshi Nur Ahamed Choudhury.

Binajuri union board No. VI.

Babu Kishori Mohan Mohajan.
Babu Mahendra Chandra Mohajan.
Babu Arjun Chandra Choudhury.
Munshi Abdul Gafur.
Babu Rasik Chandra Barua.
Babu Purna Chandra Sarkar.

Rauzan union board No. VII.

Munshi Nural Haque Choudhury.
Maulvi Nur Ahamed Choudhury.
Munshi Kaikobad Ahamed.
Munshi Basarat Ali Choudhury.
Munshi Gura Mia Choudhury.
Munshi Dalil Rahaman.

Kadalpur union board No. VIII.

Maulvi Ala Mia Choudhury, B.L.
Munshi Makbul Ali.
Munshi Sultan Ahamed Choudhury.
Munshi Abdul Bari.
Munshi Dudhu Mia.
Munshi Lal Mia Choudhury.

Pahartali union board No. IX.

Babu Banga Chandra Choudhury.
Babu Aparna Charan Chakravarty.
Babu Chandra Kanta Dutta.
Munshi Dula Mia.
Munshi Ala Mia Serang.
Babu Umesh Chandra Sil.

East Guzara union board No. X.

Babu Ramesh Chandra Mohajan.
Maulvi Abdul Jalil.
Babu Manindra Chandra Das.
Babu Ramesh Chandra Chakravarty.
Munshi Faiz Ali Matbar.
Babu Ram Ratna Dhar.

West Guzara union board No. XI.

Babu Gagan Chandra Bhattacherjee.
Babu Syama Charan Bhattacherjee.
Babu Mohini Kanta Chakrabarty.
Babu Manindra Chandra Roy.
Munshi Abdul Ghafur Serang.
Babu Kali Kumar Barua.

Urkirchar union board No. XII.

Munshi Badiul Alam.
Munshi Muhammed Tafazzel Hussein.
Babu Pulin Behari Barua.
Munshi Nur Ahmed Chowdhuri.
Babu Durga Kripa Sen.
Babu Surendra Chandra Chakrabarty.

Noapara union board No. XIII.

Babu Sarat Chandra Bhattacherjee.
Munshi Ekram Rasul.
Babu Sarada Kumar Sen.
Munshi Azimuddin Sadagar.
Babu Romesh Chandra Doctor.
Munshi Mir Hussein.

Bagoan union board No. XIV.

Munshi Abdul Subhan.
Munshi Abul Khair.
Babu Nishi Chandra Mohajan.
Babu Sarat Chandra Dev Chowdhuri.
Munshi Ghulam Rahman Chowdhury.
Babu Surjya Kumar Chakrabarty.

Rangunia police-station.

Rajanagar union board No. I.

Maulvi Siddique Ahamed Choudhury.
Munshi Abdul Gani Choudhury.
Babu Basanta Kumar Das.
Munshi Fazu Mia Choudhury.
Munshi Buzuruch Meher Choudhury.
Munshi Siddique Ahamed Choudhury.

Hosnabad union board No. II.

Maulvi Ali Miah Choudhury.
Munshi Dalilor Rahaman.
Munshi Mirja Thanda.
Munshi Nazir Ahamed.
Babu Mahesh Chandra Das.
Munshi Abdur Rahaman Choudhury.

Rangunia union board No. III.

Munshi Ali Ahamed Khan.
Babu Surendra Nath Shaha.
Munshi Badiuzzaman Choudhury.
Munshi Korban Ali.
Babu Sarat Chandra De.
Munshi Erfan Ali.

Mariamnagar union board No. IV.

Munshi Abdul Gani Choudhury.
Munshi Faiz Ahamed.
Munshi Rashid Ahamed.
Munshi Nazir Ahamed.
Munshi Manirulla Talukdar.
Munshi Ahamed Mia.

Parua union board No. V.

Babu Rebati Mohan Basak.
Munshi Mustafizor Rahaman.
Munshi Aminor Rahaman.
Babu Lalit Mohan Barua.
Babu Sarbananda Barua.
Munshi Keramat Ali.

Pomara union board No. VI.

Munshi Fazal Karim Choudhury.
Babu Nalini Ranjan Talukdar.
Doctor Khairuzzaman Choudhury.
Munshi Shokar Ali.
Babu Janaki Nath Shastri.
Maulvi Hafez Mujibar Rahaman.

Betagi union board No. VII.

Munshi Mobinal Hoque Choudhury.
Maulvi Majidal Hoque Choudhury.
Munshi Mofzal Ahamed Choudhury.
Babu Rohini Ranjan Barua.
Munshi Aminulla Matbar.
Munshi Abdul Jalil.

Sharupbhata union board No. VIII.

Babu Ram Kumar Das.
Munshi Ali Ahamed Choudhury.
Munshi Munshi Asharaf Ali Haji.
Munshi Samiruddin Ahamed.
Munshi Khalil Mia.
Munshi Md. Asharaf Choudhury.

Shilok union board No. IX.

Babu Har Chandra Palit.
Munshi Dudhu Mia Choudhury.
Munshi Lal Mia.
Munshi Osi Meah.
Munshi Nazu Mia Talukdar.
Munshi Shenayet Ali.

Padua union board No. X.

Babu Nabin Chandra Sikdar.
Munshi Nazir Ahamed Talukdar.
Munshi Lal Mia Talukdar.
Babu Paresh Chandra Choudhury.
Munshi Nur Ahamed Choudhury.
Babu Rajendra Lal Das.

Under sub-section (*3*) of section 6 of the Bengal Village Self-Government Act (Act V of 1919), the following gentlemen have been appointed by me to be members of the union boards within the different thanas in the Sadar "A" subdivision of the district of Chittagong:—

Double Moorings police-station.

Kattali union board No. I.

Maulvi Rahamat Ali Choudhury.
Munshi Nazir Ahmed Choudhury, son of late Thanda Meah Choudhury.
Babu Nagendra Chandra Karmakar.

Agrabad union board No. II.

Khan Sahib Abdul Hakim.
Munshi Md. Kala Meah, son of late Munshi Imam Ali.
Munshi Ali Ahmed Choudhury.

Halisahar union board No. III.

Munshi Md. Nural Islam.
Munshi Abul Khair.
Babu Jiban Krishna Nath Mahajan.

Patenga union board No. IV.

Munshi Abdul Kader Choudhury.
Babu Mahim Chandra Choudhury.
Babu Khirode Chandra Choudhury.

Sitakunda police-station.

Saidpur union board No. I.

Babu Bipradas Rai Choudhury.
Babu Purna Chandra Karmakar.
Munshi Oli Ahmed Moherrer.

Baraiyadhala union board No. II.

Munshi Aminullah Choudhury.
Munshi Ramjan Ali Kerani.
Babu Surendra Lal Dutta.

Sitakunda union board No. III.

Babu Janaki Nath Kar Choudhury.
Maulvi Sayed Obedur Rahaman.
Munshi Habibullah Sadagar.

Muradpur union board No. IV.

Munshi Siddique Ahmed.
Maulvi Tafazzal Haque.
Munshi Habibar Rahaman.

Barabkunda union board No. V.

Munshi Moharam Ali.
Munshi Abdul Gafur Bhuiya.
Babu Nabin Chandra De.

Bansbhariya union board No. VI.

Munshi Atan Meah Choudhury.
Munshi Asanullah Bhuiya.
Babu Akhil Chandra Nath Mahajan.

Kumira union board No. VII.

Munshi Abdus Sattar Choudhury.
Munshi Sayed Ahmed.
Maulvi Azizullah.

Sonaicheri union board No. VIII.

Munshi Oliullah Choudhury.
Babu Kumud Behari Choudhury.
Babu Kandarpa Mohan Nath Mahajan.

Bhatiyari union board No. IX.

Babu Ram Gobinda Karmakar.
Babu Rajani Kanta Sil.
Munshi Amir Hussain Choudhury.

Mirsarai police-station.

Karerhat union board No. I.

Maulvi A. K. M. Bazlur Rahaman, B.L.
Babu Surendra Bijoy Dutta (Doctor).
Babu Bharat Chandra Kar Choudhury.

Hinguli union board No. II.

Khan Sahib Sayed Sirajuddin.
Babu Surendra Mohan Das Choudhury.
Maulvi Kazi Fazlur Rahaman.

Zorwarganj union board No. III.

Maulvi Mazher Ahmed Choudhury.
Munshi Mir Bazlur Rahaman.
Babu Madhab Chandra Baisnab.

Dhoom union board No. IV.

Babu Nabin Chandra Choudhury.
Babu Sasi Bhusan De.
Munshi Md. Bashirullah.

Osmanpur union board No. V.

Munshi Ali Azam.
Munshi Abdul Majid Choudhury.
Babu Rajani Kumar Sil Master.

Ichakhali union board No. VI.

Munshi Abdul Hakim Bhuiya.
Munshi Fakir Ahmed.
Babu Dinesh Chandra Doctor.

Katacherra union board No. VII.

Munshi Abdul Latif Bhuiya.
Maulvi Keramat Ali Choudhury.
Babu Umesh Chandra Mahajan.

Durgapur union board No. VIII.

Maulvi Sayed Faiz Ahmed Choudhury.
Munshi Bazlar Rahaman Choudhury.
Babu Shasi Bhushan Moherror.

Mirsarai union board No. IX.

Babu Sarada Kumar Choudhury.
Maulvi Haji Abdul Latif Sikdar.
Munshi Abdul Hadi Matbar.

Mithanala union board No. X.

Babu Bharat Chandra Dam.
Munshi Haji Nur Muhammed.
Munshi A. K. M. Shamsuddin Choudhury.

Maghadia union board No. XI.

Maulvi Moklukar Rahaman Choudhury.
Munshi Nur Ahmed Master.
Babu Karuna Kumar Chakravarty.

Khaiyacherra union board No. XII.

Babu Umesh Chandra Rai.
Babu Kamini Kumar Rai.
Munshi Haji Midhan Ali Meah.

Mayani union board No. XIII.

Maulvi Manir Ahmed.
Maulvi Habibur Rahaman Choudhury.
Babu Khitish Chandra Choudhury.

Haidkandi union board No. XIV.

Munshi Nazir Ahmed.
Babu Sarada Charan Barua.
Babu Haranath Sen.

Wahedpur union board No. XV.

Maulvi Abdul Ghani Choudhury.
Babu Rasik Chandra Dhar.
Babu Kali Kumar Karmakar.

Panchalaish police-station.

Sholasahar union board No. I.

Munshi Ahmedar Rahaman of Sulakbahar.
Munshi Haji Nezamat Ali.
Babu Nemai Charan Mahajan.

Panchalaish union board No. II.

Munshi Abdus Sobhan.
Maulvi Abdul Samad.
Munshi Aminar Rahaman Khan.

Chandgaon union board No. III.

Maulvi Bazle Ahmed Sadagar.
Munshi Magbul Ali Khan.
Babu Himangshu Bimal Sen.

Mohara union board No. IV.

Munshi Md. Ismail Choudhury.
Munshi Fazar Ali Sarkar.
Babu Jagat Bandhu Chakravarty.

Bakalia union board No. V.

Munshi Md. Ismail.
Maulvi Abdul Gafur.
Munshi Ayub Ali Sadagar.

Hathazari police-station.

Faradabad union board No. I.

Munshi Serajal Haque.
Munshi Basharat Ali Choudhury.
Babu Satish Chandra Sil.

Dhalai union board No. II.

Munshi Dula Meah Choudhury.
Maulvi Sayed Aminal Haque.
Babu Uma Charan Choudhury.

Mirzapur union board No. III.

Babu Kali Prasanna Das.
Babu Angri Charan Choudhury.
Munshi Tofar Ali.

Gumanmardan union board No. IV.

Munshi Nurajjama Chowdhury.
Munshi Haji Abdul Jalil.
Babu Tarani Sen Mutsaddi.

Hathazari union board No. V.

Maulvi Kazi Hafezar Rahaman.
Munshi Ali Ahmed.
Babu Khagendra Das Choudhury.

Mekhal union board No. VI.

Maulvi Nur Ahmed Choudhury.
Munshi Sayed Mohsirullah.
Maulvi Abdul Wahab.

North Madarsha union board No. VII.

Maulvi Nazir Ahmed.
Doctor Abdur Rahaman.
Munshi Belal Ahmed.

Fatehpur union board No. VIII.

Munshi Abdus Sabur Choudhury.
Munshi Sayed Ahmed.
Munshi Abdul Haque.

Pahartali union board No. IX.

Maulvi Abdus Sobhan.
Babu Braja Kishore Shaha.
Babu Nishi Chandra Nandi.

Chikandandi union board No. X.

Munshi Amir Ali Choudhury.
Munshi Md. Moslem.
Babu Chandra Kumar Chakravarty.

South Madarsha union board No. XI.

Maulvi Hedayet Ali, B.A.
Munshi Abdur Rashid.
Babu Chandra Kumar Chakravarty.

Sikarpore union board No. XII.

Babu Sarat Chandra Kabyatirtha.
Maulvi Torab Ali Choudhury.
Munshi Ala Meah Choudhury.

Fatikcheri police-station.

Dantmara union board No. I.

Munshi Pasan Meah.
Munshi Mogbul Ahmed.
Babu Ram Kumar Mahajan.

Narayanhat union board No. II.

Babu Prasanna Kumar Smritititirtha.
Babu Ram Kanai Mahajan.
Munshi Abdur Rashid.

Bhujpur union board No. III.

Babu Subal Chandra De.
Munshi Oli Meah Matbar.
Munshi Arifar Rahaman.

Harualcheri union board No. IV.

Munshi Abul Hussain Choudhury.
Munshi Musharaf Ali.
Dr. Sarat Chandra De.

Paindong union board No V.

Maulvi Aminar Rahaman Choudhury.
Babu Mohini Mohan Raha.
Babu Prasanna Kumar Barua.

Kanchannagar union board No. VI.

Munshi Tofel Ahmed.
Babu Nabin Chandra Sen.
Babu Umesh Chandra De.

Bibirhat union board No. VII.

Dr. Nazir Ahmed.
Munshi Ibrahim Sadagar.
Munshi Md. Soleman Choudhury.

Sundarpur union board No. VIII.

Babu Sarat Chandra De.
Babu Krishna Mohan Nath.
Munshi Md. Ishaque.

Suabil union board No. IX.

Munshi Haji Bakar Ali Sarkar.
Munshi Abdul Jabbar.
Babu Aparna Charan Shaha.

Doulatpur union board No. X.

Munshi Abdul Ghani.
Munshi Fazlar Rahaman.
Babu Chandra Kumar Hazari.

Lelang union board No. XI.

Maulvi Mogbul Ahmed.
Munshi Sultan Ahmed.
Munshi Zahural Islam.

Nanupur union board No. XII.

Maulvi Shaha Sayed Delwar Hussain.
Maulvi Abdus Sobhan.
Babu Chaitanya Charan Barua.

Roshangiri union board No. XIII.

Munshi Korban Ali Master.
Munshi Nurajjaman.
Babu Pulin Behari De.

Baktapur union board No. XIV.

Munshi Abdul Jabbar.
Munshi Abdul Ghani.
Babu Jaga Mohan Sil.

Dharmapur union board No. XV.

Munshi Bazlar Rahaman.
Munshi Haji Belayet Ali.
Babu Manindra Chandra Sil.

Rauzan police-station.

Haladia union board No. I.

Babu Annada Charan Barua.
Babu Kailash Chandra Bidyabinode.
Babu Durga Charan Smritiratna.

Dabua union board No. II.

Babu Ramesh Chandra Dhar.
Munshi Azizal Haque.
Babu Tripura Charan Barua.

Chikdair union board No. III.

Maulvi Abdur Rahaman, B.T.
Maulvi Md. Etim.
Munshi Azizar Rahaman.

Gahira union board No. IV.

Munshi Abdul Jalil Sadagar.
Babu Rajkumar Barua.
Babu Rasik Chandra De.

Sultanpur union board No. V.

Maulvi Wali Meah Choudhury, B.L.
Babu Harish Chandra De, B.L.
Babu Ramesh Chandra Palit.

Binajuri union board No. VI.

Munshi Rajjak Ali Matbar.
Maulvi Furrok Anwar Choudhury.
Babu Kartul Chandra Barua.

Rauzan union board No. VIII.

Babu Bankim Chandra Barua.
Maulvi Hedayet Ali Choudhury.
Babu Ramesh Chandra Chakravarty.

Kadalpur union board No. VIII.

Munshi Nur Ali.
Babu Shiba Das Bhatta.
Babu Mahendra Lal Barua.

Pahartali union board No. IX.

Babu Atul Krishna Barua.
Babu Jatindra Mohan Barua.
Babu Gagan Chandra Talukdar.

East Guzara union board No. X.

Babu Akhil Chandra Barua.
Munshi Ansar Ali.
Babu Gagan Chandra Mahajan.

West Guzara union board No. XI.

Babu Jatindra Kumar Rai.
Maulvi Ruhal Amin.
Munshi Ali Ahmed Sadagar.

Urkirchar union board No. XII.

Babu Lakshmindar Barua.
Munshi Khalilar Rahaman Shah.
Babu Rebati Mohan Dhar.

Noapara union board No. XIII.

Munshi Zinnat Ali.
Maulvi Md. Ismail.
Babu Abala Charan Sen.

Bagoan union board No. XIV.

Babu Nalini Kanta Sen.
Munshi Abdul Haque Choudhury.
Babu Jiban Das Barua.

Rangunia police-station.

Rajanagar union board No. I.

Babu Kanai Lal De.
Munshi Sayed Ahmed Talukdar.
Babu Braja Mohan Barua.

Hosnabad union board No. II.

Babu Rai Mohan Shaha.
Babu Peari Mohan Rudra.
Munshi Mirza Wazed Ali.

Rangunia union board No. III.

Munshi Annar Meah.
Babu Rasik Chandra Shaha, B.L.
Babu Rajani Kanta Barua.

Mariamnagar union board No. IV.

Babu Kamini Kumar Bhatta.
Babu Ruhini Ranjan Das.
Maulvi Abul Hashem.

Parua union board No. V.

Maulvi Jebal Hussain Doctor.
Munshi Yakub Shah.
Babu Rash Mohan Sinha.

Pomara union board No VI.

Maulvi Ali Ahmed Pandit.
Maulvi Md. Rafiul Kader.
Munshi Abul Bashar.

Betagi union board No. VII.

Babu Tara Charan Basak.
Munshi Lal Meah Kulal.
Babu Janme Joy Barua.

Sharuphhata union board No. VIII.

Munshi Osiar Rahaman.
Munshi Obedulla Choudhury.
Babu Nagendra Lal Sil.

Shilok union board No. IX.

Babu Jogendra Lal Barua.
Munshi Hedayet Ali.
Munshi Hamid Sharif.

Padua union board No. X.

Babu Kishore Chandra Acherjee.
Babu Mahendra Lal Barua.
Maulvi Ismail Ahmed Talukdar.

A. KEMP, *District Magistrate.*

Dacca Division—Dacca.

Erratum. — No. 4587J. — 12th September 1931.—In paragraph 1 of this office notification No. 4446J., dated the 1st September 1931, publishing the names of the elected members of the Patuakhali local board in the district of Bakarganj, at page 1087 of Part I of the *Calcutta Gazette*, dated the 10th idem, under police-station Amtali, *for* "Munshi Azharuddin Ahmed Talukdar" *read* "Munshi Afazuddin Ahmed Talukdar."

H. GRAHAM, *Commissioner (offg.)*.

Mymensingh, the 7th September 1931.

No. 742 C.—It is hereby notified for general information that, under sub-section (2) of section 6 of the Bengal Village Self-Government Act, 1919 (Bengal Act V of 1919), the following gentlemen have been duly elected to be members of the undermentioned union boards in the Kishoreganj subdivision of the Mymensingh district:—

Police-station Bajitpur.

Humaipur union board.

Munshi Mohammed Sona Mia.
Munshi Chand Ali Bepari.
Munshi Miasin Munshi.
Munshi Abdul Karim.
Babu Lakshan Chandra Das.
Babu Saday Charan Das.

Maijchar union board.

Munshi Abdul Hakim Sarkar.

Dilalpur union board.

Ward I.

Munshi Aftabuddin Ahmed.
Munshi Naimuddin Sarkar.
Maulvi Najmul Huda.

Ward II.

Munshi Abdul Karim.
Babu Maheswar Roy.
Munshi Abdul Hashim.

Dighirpar union board.

Munshi Aftabuddin Ahmed.
Maulvi Syedur Rahman.
Munshi Abdul Amin Bepari.
Munshi Meadhar Sarkar.
Babu Parameshwar Chakraverty.
Munshi Ayatulla Sarkar.

Hiluchia union board.

Ward I.

Babu Mahesh Chandra Debnath.
Babu Rajendra Chandra Saha.
Munshi Saheb Ali.

Ward II.

Babu Dinesh Chandra Mazumdar.
Munshi Shamsuddin Ahmed.
Munshi Abdul Khaleque.

Sararchar union board.

Ward I.

Babu Naresh Govinda Ray Choudhury.
Munshi Shah Noaj.
Munshi Fajar Ali Shah.

Ward II.

Maulvi Abdul Nabi.
Munshi Abdul Mamin Mia.
Munshi Fazlur Rahman.

Pirijpur union board.

Munshi Abdul Jabbar Bhuya.
Munshi Abdul Khalil.
Munshi Abdul Majid.
Babu Gagan Chandra Bhoumick.
Babu Atul Chandra Bhoumick.
Babu Profulla Chandra Acharjee.

Police-station Kuliarchar.

Ramdi union board.

Maulvi Fazlur Rahman.
Munshi Md. Abdul Khaleque.
Babu Shashi Mohon Debnath.
Munshi Mati Mia.
Munshi Mosle Uddin Khan.
Munshi Abal Hossen.

Chhaysuti union board.

Maulvi Jamiruddin.
Babu Dwarka Nath.
Babu Taranga Kumar Das Roy.
Maulvi Makbul Hossain.
Maulvi Md. Misir Mia.
Maulvi Abdul Gani Master.

Gobaria union board.

Munshi Abdul Sobhan Bhuya.
Munshi Abdul Hasim Bhuya.
Munshi Montaz Uddin Ahmed.
Munshi Asmat Ali Bhuya.
Munshi Mahammad Ali Sarkar.
Munshi Samser Uddin Ahmed Bhuya.

Salua union board.

Babu Protap Chandra Bhoumick.
Maulvi Emaduddin Ahmed.
Babu Ananda Kishore Das.
Maulvi Habibar Rahman.
Maulvi Rosmat Ali Bhuya.
Maulvi Md. Abdul Karim.

Police-station Bhairab.

Sadakpur union board.

Munshi Abdul Sobhan.
Munshi Chand Ali Bhuya.
Munshi Abdul Aziz.
Munshi Lal Mahmud.
Munshi Chhorat Ali.
Munshi Abdul Barik Bhuya.

Aganagar union board.

Munshi Momtaz Uddin Ahmed.
Munshi Abdul Majid.
Munshi Abdul Ali Sikdar.
Munshi Kanu.

Simulkandi union board.

Babu Jatindra Mohan Burman Ray.
Munshi Afsaruddin Ahmed.
Babu Paresh Lal Burman Ray.
Babu Pyari Mohan Adhikari.
Munshi Sadagar.
Munshi Subedali Sheikh.

Kalikaprosad union board.

Ward I.

Munshi Alauddin Ahmed.
Munshi Amiruddin Sheikh.
Munshi Rosmat Ali Sarkar.
Munshi Syeduddin Ahmed.

Ward II.

Maulvi Mahiuddin Ahmed.
Munshi Rostam Ali Sarkar.

Gajaria union board.

Munshi Hossain Ali Master.
Babu Jagat Bandhu Dhar.
Munshi Giranee Mia.
Munshi Abdul Aziz Sheikh.
Munshi Mominuddin Ahmed.
Munshi Baharulla Sheikh.

Police-station Astagram.

Deoghar union board.

Munshi Ibrahim Bhuya.
Munshi Md. Makshud Ali.
Munshi Amzad Ali Amin.
Munshi Wazaddin Molla.
Munshi Mafiz Uddin Shaik Master.
Munshi Basiruddin Ahmed.

Kastul union board.

Babu Kedar Nath Dhar.
Babu Ananda Kishore Dutt Ray.
Babu Jogesh Chandra Dhar.
Munshi Syedjama Bhuya.
Munshi Abdul Hasim Bhuya.
Munshi Chamu Prodhani.

Astagram union board.

Babu Ram Chandra Mazumdar.
Babu Profulla Chandra Dutt Mazumdar.
Babu Narendra Kishore Dutt.
Babu Govinda Chandra Dutt Mazumdar.
Maulvi Mahmud.
Maulvi Abdul Sobaban Bhuya.

Bangalpara union board.

Maulvi Abdul Haque.
Munshi Golam Mahiuddin.
Munshi Abdul Khaleque.
Babu Madhu Sudan Debnath.
Babu Rash Behari Debnath.
Babu Lal Mohan Das.

Kalma union board.

Babu Ananda Mohan Das.
Babu Gurudayal Debnath.
Babu Banabashi Das.
Babu Brojabashi Das.
Babu Adhar Chandra Das.

Adampur union board.

Munshi Yasin Hazi.
Munshi Mahammud Ali Hazi.
Babu Mathur Chandra Das.
Babu Narendra Chandra Das.
Babu Kamini Kumar Chakravarty.
Babu Chandra Kumar Sarkar.

2. Under sub-section (*4*) of section 6 of the Bengal Village Self-Government Act, 1919 (Bengal Act V of 1919), the following gentlemen have been duly appointed by the District Magistrate of Mymensingh to be members of the undermentioned union boards in the Kishoreganj subdivision of the Mymensingh district:—

Police-station Bajitpur.

Maijchar union board.

Munshi Kasem Ali.
Munshi Wahed Ali Hazi.
Munshi Sekandar Ali.
Munshi Abdul Kadir.
Munshi Elahi Buksha Bhuya.

Police-station Bhairab.

Aganagar union board.

Munshi Kasem Ali Sarkar.
Munshi Abdul Khaleque.

Police-station Astagram.

Kalma union board.

Babu Jadunandan Das Baisnab.

3. Under sub-section (*3*) of section 6 of the Bengal Village Self-Government Act, 1919 (Bengal Act V of 1919), the following gentlemen have been appointed by the District Magistrate of Mymensingh to be members of the undermentioned union boards in the Kishoreganj subdivision of the Mymensingh district:—

Police-station Bajitpur.

Humaipur union board.

Munshi Ibrahim Munshi.
Munshi Ambar Ali Khan.
Munshi Abdul Majid Khan.

Maijchar union board.

Babu Muluk Chand Das.
Munshi Tamizuddin Sarkar.
Munshi Gedu Mia (of Maijchar).

Dilalpur union board.

Rai Saheb Surendra Nath Bose, B.L.
Babu Maharaj Das.
Babu Aswini Kumar Chakravarty.

Dighirpar union board.

Maulvi Habibar Rahman.
Babu Gagan Chandra Saha.
Babu Jagat Bandhu Das.

Hiluchia union board.

Munshi Nabab Ali.
Babu Sashi Bhusan Das Sarkar.
Babu Bimal Krishna Ghosh, B.L.

Sararchar union board.

Babu Behari Lal Chakravarty, M.A.
Babu Nagarbashi Saha.
Babu Sailesh Chandra Roy.

Pirijpur union board.

Munshi Aktaruddin.
Babu Gurucharan Debnath Sarkar.
Babu Balak Chandra Mondal.

Police-station Kuliarchar.

Gobaria union board.

Munshi Md. Ilias.
Munshi Momtaz Uddin Bhuya.
Babu Jnan Chandra Saha.

Ramdi union board.

Babu Chandra Mohan Debnath.
Babu Atal Chandra Dutt Ray.
Munshi Abdul Sobahan Pandit.

Chhaysuti union board.

Babu Gagan Chandra Roy.
Babu Mohanbashi Biswas.
Maulvi Abdul Jalil.

Salua union board.

Maulvi Golam Rahman.
Babu Narendra Lal Acharjee.
Maulvi Syed Serajuddin Ahmed.

Police-station Bhairab.

Sadakpur union board.

Munshi Haji Golam Rahman.
Munshi Joad Ali Bepari.
Munshi Keramat Ali Bhuya.

Aganagar union board.

Munshi Lal Mahmud Bepari.
Munshi Ramiz Uddin.
Babu Nabadwip Chandra Debnath.

Simulkandi union board.

Munshi Kutub Ali Sarkar.
Munshi Momtazuddin Ahmed.
Babu Tarini Charan Dey.

Kalikaprosad union board.

Munshi Basir Hazi.
Munshi Abdul Hai.
Munshi Abdul Sobhan Sarkar.

Gajaria union board.

Munshi Hasen Ali.
Munshi Shamsuddin Ahmed.
Munshi Abdul Monnaf.

Police-station Astagram.

Deoghar union board.

Babu Gagan Chandra Das.
Munshi Abdus Sobhan.
Munshi Abdur Rahim.

Kastul union board.

Maulvi Fazlul Haque.
Maulvi Nazirul Haque.
Maulvi Syed Masih Uddin Hossain.

Astagram union board.

Munshi Surujjama.
Babu Sachindra Chandra Dutt Mazumdar.
Babu Joy Kumaresh Ray.

Bangalpara union board.

Babu Raicharan Saha.
Babu Lal Mohan Saha.
Munshi Kasum Ali.

Kalma union board.

Babu Mongalananda Das.
Munshi Rostum Prodhani.
Munshi Rosmat Ali.

Adampur union board.

Munshi Abdul Rahman.
Munshi Tamiz Uddin Ahmed.
Munshi Abdul Hasim.

Mymensingh, the 8th September 1931.

No. 748C.—It is hereby notified for general information that, under section 13 of the Bengal Village Self-Government Act, 1919 (Bengal Act V of 1919), read with rule 36 of the rules for the election and appointment of members of union boards, etc., Babu Kedar Nath De has been appointed to be a member of the Suair union board in police-station Mohanganj in the Netrokona subdivision of the Mymensingh district, *vice* Babu Guru Charan Das Biswas, resigned.

S. C. GHATAK, *District Magistrate.*

Barisal, the 11th September 1931.

It is hereby notified for general information, under rule 61 (3) of the rules for the managing committee of the Government High English Schools, that the following gentlemen have been appointed to be members of the managing committee of the Pirojpur Government High English School:—

The Subdivisional Officer of Pirojpur, President.

The Head Master of the Pirojpur Government High English School, Vice-President and Secretary.

Babu Purna Chandra Mukherjea, Mukhtear, representative of parents and guardians.

Khan Sahib Maulvi Mofizuddin Ahmed, Mukhtear, representative of parents and guardians.

Maulvi J. M. Farakh Ahamed, Assistant Master, representative of the teaching staff.

The Senior Munsif, Pirojpur (*ex-officio*).

R. L. WALKER, *District Magistrate.*

Presidency Division—Calcutta.

No. 1552R.G.—4th September 1931.—Babu Srish Chandra Mukharji, Sub-Deputy Collector, Magura, Jessore, is transferred to Chuadanga, Nadia, as Circle Officer.

No. 1558R.G. — 4th September 1931.—Maulvi Muhammad Shamsul Huda, Sub-Deputy Collector and Circle Officer, Chuadanga, is transferred to Magura, Jessore, as 2nd Officer.

Corrigendum.—No. 2292L.S.-G.—7th September 1931. — This office notification No. 1503L.S.-G., dated the 25th May 1931, appointing Maulvi Abdul Hakim and Dr. Abdul Samad as additional members of the committee for the management of the district board dispensary at Bhangore in the Sadar subdivision of the 24-Parganas district, published at page 640, Part I of the *Calcutta Gazette* of 4th June 1931, is hereby cancelled.

No. 1616R.G.—9th September 1931.—Babu Surendra Nath De, Sub-Deputy Collector and Circle Officer, Sadar, Nadia, is granted leave on average pay for twelve days, under rule 81 (*b*) (*ii*) of the Fundamental Rules, with effect from the 3rd October 1931.

No. 1621R.G.—9th September 1931.—Maulvi M. Ibrahim Hossain, Sub-Deputy Collector and Circle Officer, Jhenidah, Jessore, is granted leave on average pay for twelve days, under rule 81 (*b*) (*ii*) of the Fundamental Rules, with effect from the 27th October 1931.

No. 1629 R.G.—9th September 1931.—Babu Suresh Chandra Das Gupta, Sub-Deputy Collector and Colonisation Officer, 24-Parganas, is granted an extension of leave on average pay for one day the 19th May 1931, under rule 81 (*b*) (*ii*) of the Fundamental Rules.

No. 1634 R.G.—9th September 1931.—Babu Nripendra Kumar Sen, Sub-Deputy Collector and Circle Officer, Satkhira, Khulna, is granted leave on average pay for three weeks, under rule 81 (*b*) (*ii*) of the Fundamental Rules, in extension of the leave granted to him in this office notification N . 1246 R.G., dated the 22nd July 1931.

No. 1704M.—10th September 1931.—It is hereby notified for general information that Thursday, the 10th March 1932, has been fixed as the date for holding a general election of Commissioners of the Baruipur Municipality, in the district of the 24-Parganas, in place of those who, having been appointed under section 17 of the Bengal Municipal Act, will complete their term of office on 31st March 1932, in consequence of the removal of the name of the municipality from the 1st and 2nd schedules of the Act under Government notification No. M. 3497, dated the 3rd September 1931, with effect from the 1st April 1932.

No. 2346L.S.-G.—11th September 1931.—It is hereby notified for general information that, under section 13 of the Bengal Village Self-Government Act, 1919 (Bengal Act V of 1919), read with rule 36 of the rules for the election and appointment of members of union boards under the said Act, Babu Upendra Nath Ghosh has been appointed by the District Magistrate of Jessore to be a member of the Kasimpur union board in police-station Kotwali in the Sadar subdivision of the Jessore district, in place of Babu Basanta Kumar Ghosh, deceased.

F. W. ROBERTSON, *Commissioner (offg.)*.

Krishnagar, the 8th September 1931.

No. 5726J.G.—It is hereby notified for general information that, under section 13 of the Bengal Village Self-Government Act, 1919 (Bengal Act V of 1919), read with rule 36 of the rules for the election and appointment of members of union boards under the said Act, Babu Mahadeb Biswas has been appointed by me to be a member of the Badkulla union board in police-station Hanskhali in the Sadar subdivision of the Nadia district, in place of Babu Surendra Nath Ghosh, deceased.

T. C. ROY, *District Magistrate*.

Rajshahi Division—Jalpaiguri.

No. 3085M.—7th September 1931.—In supersession of the previous notification No. 2745M., dated the 6th August 1931, it is hereby notified for general information that the next general election of the Commissioners of the English Bazar Municipality in the district of Malda will be held on Saturday, the 19th December 1931.

No. 3449J.—8th September 1931.—Babu Jyoti Baran Chakrabatti, Sub-Deputy Collector, Dinajpur, is allowed leave on average pay for twelve days, with effect from the 27th October 1931, under rule 81 (*b*) (*ii*) of the Fundamental Rules.

No. 3113M.—9th September 1931.—It is hereby notified for general information that, under section 15 of the Bengal Local Self-Government Act, III of 1885, as amended by Act V (B.C.) of 1908, the following gentlemen are appointed to be members of the Kalimpong local board in the district of Darjeeling:—

The Subdivisional Officer, Kalimpong (*ex-officio*).
The Subdivisional Forest Officer, Kalimpong (*ex-officio*).
The Manager, Government Estates, Kalimpong (*ex-officio*).
Reverend Father Jules Douenel.
Babu Bhim Bahadur Singh.
Mr. C. H. Wandi.
Babu Pem Dorji.
Babu Prem Singh.
Babu Harshalal Dikshit.
Mr. Sangay Dorji.

No. 3124 M.—11th September 1931.—In exercise of the powers conferred on me by section 19(*2*) of the Bengal Local Self-Government Act (III of 1885) as amended by Act V (B.C.) of 1908, and acting under the orders of the Local Government given in the exercise of the administrative control vested in them by section 29B of the said Act, I appoint the Circle Officer of Pirganj to be an *ex-officio* member of the Sadar local board in the district of Rangpur, *vice* Babu Dhirendra Nath Mukherjee, resigned.

No. 3127 M.—11th September 1931.—In exercise of the powers conferred on me by section 19(*2*) of the Bengal Local Self-Government Act (III of 1885) as amended by Act V (B.C.) of 1908, and acting under the orders of the Local Government given in the exercise of the administrative control vested in them by section 29B of the said Act, I appoint the Circle Officer of Lalmonirhat to be an *ex-officio* member of the Kurigram local board in the district of Rangpur, *vice* Maulvi Fazlul Karim, resigned.

No. 3130 M.—11th September 1931.—In exercise of the powers conferred on me by section 19(*2*) of the Bengal Local Self-Government Act (III of 1885) as amended by Act V (B.C.) of 1908, and acting under the orders of the Local Government given in the exercise of the administrative control vested in them by section 29B of the said Act, I appoint the Circle Officer of Sadullapur to be an *ex-officio* member of the Gaibandha local board in the district of Rangpur, *vice* Babu Krishna Kamal Datta, resigned.

No. 3133 M — 11th September 1931.—In exercise of the powers conferred on me by section 19(*2*) of the Bengal Local Self-Government Act (III of 1885) as amended by Act V (B. C.) of 1908, and acting under the orders of the Local Government given in the exercise of the administrative control vested in them by section 29B of the said Act, I appoint the Circle Officer of Domer to be an *ex-officio* member of the Nilphamari local board in the district of Rangpur, *vice* Maulvi T. Rahaman, resigned.

No. 3494J.—11th September 1931.—Babu Krishna Kamal Datta, Sub-Deputy Collector and Circle Officer, Gaibandha, Rangpur, is allowed leave on average pay for one month, under rule 81 (*b*) (*ii*) of the Fundamental Rules, with effect from the 15th September 1931, or any subsequent date on which he may be relieved.

J. G. DRUMMOND, *Commissioner (offg.)*.

Rangpur, the 9th September 1931.

No. 5043J.—It is hereby notified for general information that, under section 13 of the Bengal Village Self-Government Act, 1919 (Bengal Act V of 1919), Babu Ram Ratan Nandi has been appointed to be a member of Taluk Kanupur union board in police-station Gobindaganj in Gaibandha subdivision of the Rangpur district, *vice* Babu Upendra Mohan Chakrabarty, resigned.

T. M. Dow, *District Magistrate.*

The Calcutta Gazette

THURSDAY, SEPTEMBER 17, 1931.

Part I A

Orders and Notifications by the Government of India republished for general information.

DEPARTMENT OF COMMERCE.

NOTIFICATION.

MERCHANT SHIPPING.

Simla, the 29th August 1931.

No. 31-M.I. (10)/31.—The following draft of certain rules regulating the making of surveys under Part III of the Indian Merchant Shipping Act, 1923 (XXI of 1923), which, in exercise of the power conferred by section 145 of the said Act, it is proposed to make, in supersession of all previous rules on the subject, is published, as required by sub-section (*1*) of the said section, for the information of all persons likely to be affected thereby, and notice is hereby given that the draft will be taken into consideration by the Governor General in Council on or after the 15th October 1931. Any objection or suggestion which may be received from any person with respect to the draft before the said date will be considered by the Governor General in Council.

Rules.

1. **Definition.**—In these rules, "the Act" means the Indian Merchant Shipping Act, 1923 (XXI of 1923).

2. **Ports of survey.**—The survey of ships for certificates of survey shall be conducted at the ports of Calcutta, Bombay, Karachi, Rangoon, Madras, Aden, Chittagong, Pamban, Moulmein, Akyab, Bassein and at such other ports as the Governor General in Council may appoint to be ports of survey.

3. **Application for a survey.**—Every application for the survey of a steam-ship at a port of survey shall be made in Form No. 1-Surveys hereto annexed and shall be accompanied by the prescribed fee. It shall be lodged between the hours of 10 A.M. and 5 P.M. on any day except Sundays and holidays, and not later than twenty-four hours before the hour at which it is desired that the survey should commence. At the ports of Calcutta, Bombay, Karachi, Rangoon, Madras and Aden the application shall be lodged at the office of the Principal Officer, Mercantile Marine Department; at the port of Chittagong it shall be lodged at the office of the Nautical Surveyor, and at other ports of survey it shall be lodged at the office of the Port Officer.

4. **Receipt and list of preparations for survey to be furnished.**—On receipt of an application in the form aforesaid duly filled in and of the survey fee, the officer receiving the same shall deliver to the applicant a receipt for the fee so paid and an intimation that the application for survey has been received, together with a list of the requisite preparations for the survey of the steam-ship. The said intimation and list shall be in Form No. 2-Surveys hereto annexed.

5. **Days of survey.**—On receipt of an application from the owner, agent or master of a steam-ship, a survey shall be made by the Surveyor or Surveyors appointed under the Act on any day in the year, except a Sunday or a Government holiday: Provided that if circumstances admit, a survey may be made on a Sunday or a Government holiday on payment of the additional fee prescribed in rule 16.

6. **Postponement of survey.**—If the requisite preparations to enable the Surveyor to carry out the survey have not been made on the day and by the hour mentioned in the application for a survey, the Surveyor may fix some other convenient date and hour for the survey.

7. **Procedure when a steam-ship is found defective.**—If a Surveyor finds that any defect exists in the hull, machinery or equipments of a steam-ship, he shall, before refusing to give a declaration regarding the ship under section 134 of the Act, address a letter in Form No. 3-Surveys hereto annexed to the owner or master of the steam-ship, pointing out such defect and the repairs, etc., necessary to make good the same. If the Surveyor be subsequently informed by the owner or master of the steam-ship that the requisite repairs, etc., have been executed, he shall pay one or more extra visits to the steam-ship, as may be necessary, and thereafter may either give or refuse a declaration of survey as he shall think proper.

8. **Declaration of survey.**—Every declaration of survey furnished under section 134 of the Act shall be in Form No. 4-Surveys hereto annexed and shall contain the particulars therein prescribed.

9. **Sending of declaration by owner or master.**—The officer to whom every such declaration shall be sent in accordance with sub-section (*l*) of section 135 of the Act by the owner or master to whom it is given shall be the Principal Officer, Mercantile Marine Department, at the ports of survey at Calcutta, Bombay, Karachi, Rangoon, Madras and Aden, the Nautical Surveyor at the port of survey at Chittagong, and the Port Officer at other ports of survey.

10. **Certificate of survey.**—Every certificate of survey shall be in Form No. 6-Surveys hereto annexed and shall contain the particulars therein prescribed.

11. **Notice under section 136 (3).**—The notice to be given to the owner or master of a steam-ship under sub-section (*3*) of section 136 of the Act shall be given in Form No. 5-Surveys hereto annexed, at the ports of survey at Calcutta, Bombay, Karachi, Rangoon, Madras and Aden, by the Principal Officer, Mercantile Marine Department, at the port of survey at Chittagong by the Nautical Surveyor, and at other ports of survey by the Port Officer.

12. **Correspondence.**—All correspondence relating to the survey of steam-ships shall be addressed as follows:—

(*i*) at the ports of Calcutta, Bombay, Karachi, Rangoon, Madras and Aden.	To the Principal Officer, Mercantile Marine Department.
(*ii*) at the port of Chittagong	To the Nautical Surveyor.
(*iii*) at other ports	To the Port Officer.

13. (1) **Fees.**—A fee at the following rates shall be payable in respect of surveys, certificates whereof will remain in force for one year from the date thereof (unless sooner cancelled or suspended):—

For steam-ships of which the gross tonnage—

	Rs.
does not exceed 100 tons	105
exceeds 100 tons but does not exceed 300 tons	120
exceeds 300 tons but does not exceed 600 tons	135
exceeds 600 tons but does not exceed 900 tons	150
exceeds 900 tons but does not exceed 1,200 tons	180
exceeds 1,200 tons but does not exceed 1,500 tons	217-8
and for every additional 300 tons or fraction of 300 tons in excess of 1,500 tons	37-8

(2) If the ship's hull, machinery, or equipments are stated in the certificate to be sufficient only for a period of less than one year from the date thereof, one-twelfth of the fee payable under sub-rule (1) shall be payable for each month or fraction of a month comprised in the said period:

Provided that—

(*a*) the minimum fee shall be one-fourth of the annual fee;

(*b*) the full annual fee shall be payable, whatever be the nature of the certificate—

(*i*) in the case of a new steam-ship coming under survey for the first time, or

(*ii*) if, in accordance with the application for a survey, a steam-ship has been fully surveyed, but the owner or agent of the steam-ship, is, for any reason, unwilling or unable to execute the repairs recommended by the Surveyor, or

(*iii*) if the survey is completed with the exception of certain minor details.

(3) The fee payable under this rule shall be deemed to cover all the visits which a Surveyor may have to make before granting his declaration.

14. (1) **Fees payable for a survey while a certificate is in force and for docking certificates.**—If a visit from a Surveyor is necessary while a certificate of survey is in force, a fee at the rate of Rs. 32 shall be payable for every visit that the Surveyor makes.

(2) The fee for an intermediate survey for a docking certificate made at the owner's request of a steam-ship holding a certificate of survey issued by the Government of India, the Board of Trade, London, or a British Colonial Government, shall be Rs. 32. This fee shall be for the complete survey for a docking certificate and not per visit.

15. (1) **Survey of steam-ships with foreign certificates of survey or certificates of partial survey.**—Notwithstanding anything contained in these rules, if during the currency of a valid certificate of survey granted in respect of a steam-ship by the Board of Trade, or by any British Colonial Government or by any foreign Government whose certificates of survey are accepted under the provisions of the Act, an application is made by the owner, agent or master thereof to carry passengers in addition to the number prescribed by the said certificate, the survey of the vessel shall consist only of the survey of such parts as are concerned in the carriage of the additional passengers.

(2) The fee payable for a survey of the nature referred to in sub-rule (1) shall be Rs. 32.

16. **Fees for surveys on holidays.**—In addition to the fees payable under rules 13, 14 and 15 there shall be payable along with an application for a survey a fee of Rs. 60 in respect of every survey which is required by such application to be made on any of the following days, that is to say,

(*a*) a Sunday.

(*b*) New Year's Day.

(*c*) Good Friday.

(*d*) The King Emperor's Birthday.

(*e*) Christmas Day.

17. **Overtime fees.**—The charge of overtime fees in respect of surveys or inspections wholly or partially carried out between the hours of 5 P.M. and 7 A.M. shall be regulated as follows:—

(*a*) Where on the application of an owner or agent of a steam-ship a Surveyor is called upon to undertake the survey or inspection of a vessel after 5 P.M. and before 7 A.M. an additional fee of Rs. 50 shall be charged.

(*b*) Where a Surveyor is detained at the request of the owner or agent of the steam-ship after 5 P.M. to complete a survey undertaken between the hours of 7 A.M. and 5 P.M. an additional fee of Rs. 25 shall be charged if the Surveyor is released from duty before 6 P.M. and of Rs. 50 if he is detained later than 6 P.M.

(*c*) Where the owner or agent has asked for survey between the hours of 7 A.M. and 5 P.M. but official arrangements have not allowed of the work being done between those hours, no additional fee shall be chargeable.

(*d*) Where a Surveyor has been called upon as specified in clause (*a*) or detained as specified in clause (*b*), the owner or agent of the ship shall give information of the fact in writing to the Principal Officer or to the Principal Engineer and Ship Surveyor of the Port stating the hours during which the Surveyor was in attendance.

FORMS.

FORM NO. 1-SURVEYS.

APPLICATION FOR SURVEY OR INSPECTION.

(See Rule 3.)

(Twenty-four hours' notice must be given in all cases.)

SIR,

I beg to apply for the Survey described below. I forward the survey fee Rs. As. Ps. herewith and agree to pay the expenses and balance of fee which may be properly chargeable in connection with the case.

.....Signature.

The Principal Officer,

Mercantile Marine Department,

.....Address.

.....District.

Nautical Surveyor, Chittagong. .....Date.

.....

Port Officer.....

PARTICULARS OF SHIP.

Name of Ship.	Port of Registry.	Official No.	Steam, motor or sail.	Material.	Classification, if any.	Tonnage.	
						Gross.	Register.

Hull when and where built.	Engines when built and by whom.	Boilers when built and by whom.	Intended voyage.	Proposed date for sailing.

Name and address of owners or agents of Ship.....

Place where and date and hour when ship will be ready for survey.....

No. of Last Passenger Certificate.....

Nature of survey now required.....

Particulars of Casualties to the ship since her last survey (if any).....

(To be filled in at the Mercantile Marine Office.)

The fee of..... has been duly received and receipt No..... has been granted.

Passed to the Principal Surveyor for necessary action.

Principal Officer,

.....District.

II.

Application duly noted. ..... } Surveyors are appointed.

Principal Surveyor.

III.

Noted and returned to the Principal Officer.

Date.....

Surveyors.

FORM NO. 2-SURVEYS.

RECEIPT AND LIST OF REQUISITE PREPARATIONS FOR SURVEY.

(See Rule 4.)

No.

MERCANTILE MARINE DEPARTMENT.

.....*193*

To

.....

MEMO.

I herewith acknowledge receipt of an application for survey of the above vessel under the Indian Merchant Shipping Act, 1923 (XXI of 1923).

2. A Surveyor will proceed on board the vessel by appointment.

3. I attach a list of the requisite preparations for the survey, which must be made to prevent loss of the Surveyor's time, otherwise it may be necessary for the Surveyor to postpone the survey to some future date.

4. I invite attention to the provisions of section 130 (2) of the Indian Merchant Shipping Act, 1923, which are as follows:—

> "The owner, master and officers of the steam-ship shall afford to the Surveyor all reasonable facilities for a survey, and all such information respecting the steam-ship and her machinery and equipments, or any part thereof, respectively, as he reasonably requires."

Signature

Place

Date

LIST OF REQUISITE PREPARATIONS FOR THE SURVEY OF A STEAM-SHIP.

1. Register and last Survey Certificate, if any
2. Master's Certificate
3. Mates' Certificates
4. Engineers' Certificates
5. Load Line Certificate
6. Last Passenger Certificate
7. The Compass Certificate enclosed signed by the Master and Mate.

} To be on board at the time of final survey.

8. Boats with complete equipment to be uncovered and ready to lower. All air cases to be removed for examination.

9. Deck pumps to be rigged.

10. Mast-head lights, side lights, stern light and anchor light to be on deck and ready to ship in their respective places if required.

		No.
11. Life-buoys ..	Vessels under 400 feet length	12
	Vessels from 400—600 feet length	18

} and life-

belts (one for each person on board) to be on deck. Two life-buoys to be fitted with lines 15 fms. in length. At least half the number of life-buoys and not less than six to be fitted with self-igniting lights (one to each).

12. Every foreign-going vessel to be provided with at least 3 good compasses complete in or on binnacles. One of them must be a standard compass.

13. Two deep sea leads of 28 lbs. each with two lead lines, each 120 fms. long fitted on reels and four hand leads of 7 lbs. each with lead lines 25 fms. in length to be on deck.

14. 24 socket signals or cartridges for signal gun, 12 blue lights, 12 rockets with heads containing ozs. of composition, 6 or 9 self-igniting life-buoy lights, 2 deck flares, signal gun and fog horn to be ready for inspection.

15. Fire-hoses to be connected and stretched along the deck and fire pumps tried.

16. Deck cabins, steerages, all other passenger spaces and crews quarters to be clean and clear.

17. Chain cables to be ranged along dock bottom when vessel is in dry dock.

18. Holds and bilges to be clean and clear and a safe and proper ladder provided for inspection of same. Strums of suction pipes to holds and engine-room to be accessible for examination.

19. Double bottoms to be open, clean and dry, if necessary.

20. Boilers to be empty, clean and quite cool, and all the manhole doors to be off.

21. All furnace bars, bearer bars and bridges to be out of each boiler.

22. Furnaces, flues, smoke-boxes, and tube plates to be swept quite clean.

23. The safety-valves and weights or springs of each boiler to be disconnected for examination and all other mountings opened up for examination.

24. Evaporator to be opened up for examination.

25. All under-water valves and cocks to be opened up for survey when vessel is in dry dock.

26. Cylinder and slide chest covers to be removed, pistons opened up and slide valves removed for examination or turbine casings opened.

27. Shaft tunnel to be clean and clear for the proper examination of the plummer blocks, thrust bearing and stern gland.

28. All crank pin and crank shaft bearings and plummer blocks to be opened up for examination.

29. Air, Cir, feed and bilge pumps and valves to be opened up for examination.

NOTE.—Propeller shaft to be drawn, if necessary. Main and auxiliary steam pipes to be tested, if necessary.

30. In order to be properly equipped, each boat shall be provided according to the following extract from the Rules:—

(1) Every boat which is carried by any ship shall be equipped as follows:—

(*a*) With the full single banked complement of oars, and two spare oars and a steering oar.

(*b*) With two plugs for each plug hole, attached with lanyards or chains, and one set and a half of thole pins or crutches attached to the boat by sound lanyards. Plugs shall not be required where proper automatic valves are fitted.

(*c*) With a sea anchor, a bailer, a galvanised iron bucket, a rudder and a tiller, or yoke and yoke lines, a painter of sufficient length, and a boat hook. The rudder, the bailer, and the bucket shall be attached to the boat by sufficiently long lanyards, and kept ready for use.

(*d*) With a vessel capable of holding one quart for each person that the boat is deemed fit to carry. This vessel shall be kept filled with fresh water, and provided with a dipper with lanyard.

(*e*) With two hatchets, one to be kept in each end of the boat, and to be attached to the boat by a lanyard.

(*f*) With a line securely becketted round the outside of the boat.

(*g*) With an efficient lantern trimmed, with oil in its receiver sufficient to burn eight hours; or with some other lantern or light at least as effective, approved by the Board of Trade.

(2) In addition to the equipment prescribed above, the boats in ships of Class I and II shall be equipped as provided in clauses (*a*) to (*f*), inclusive, of this sub-entry of this entry. The boats of ships in Class III shall be provided with the additional equipment specified in clauses (*a*), (*b*), (*c*), (*d*) and (*e*) of this sub-entry of this entry, and the boats in ships of Class IV, V and VI shall be provided with the equipment in clauses (*b*), (*d*) and (*e*) of this sub-entry of this entry—

(*a*) With a mast or masts, and with at least one good sail and proper gear for each; but this does not apply to an approved motor boat.

(*b*) With an efficient compass.

(*c*) With an air-tight case containing 2 pounds of biscuits for each person for whom the boat is approved.

(*d*) With one gallon of vegetable or animal oil, and a vessel of approved pattern for distributing it on the water in rough weather. This vessel shall be capable of being attached to the sea anchor.

(*e*) With one dozen self-igniting red lights in a water-tight tin, and a box of suitable matches in a water-tight tin.

(*f*) With 1 lb. of condensed milk for each person the boat is certified to carry.

31. Approved rope ladders of sufficient length to reach the water line at light draught, one for each two sets of davits, but not more than ten, shall be provided.

FORM No. 3-SURVEYS.

FORM OF LETTER POINTING OUT DEFECTS IN STEAM-SHIP.

(See Rule 7.)

SURVEY OF STEAM-SHIP.

MERCANTILE MARINE DEPARTMENT.

.....*193* .

To

.....

SIR,

Having surveyed the S.S. in accordance with the Indian Merchant Shipping Act, 1923, I find the following to be the repairs, etc., required to make good the defects:

Hull—

Equipment—

Engines—

Boilers—

I have the honour to be,

SIR,

Your most obedient servant,

Surveyor.

FORM No. 4-SURVEYS.

DECLARATION OF SURVEY.

(See Rule 8.)

NOTE.—This declaration must be forwarded to the within FOURTEEN DAYS of its receipt by the owner or agent.

DECLARATION

No. of former Certificate

OF

Date of issue of former Certificate.

SURVEY OF A PASSENGER VESSEL.

Issued by the Government of India in pursuance of the Indian Merchant Shipping Act, 1923.

N.B.—Any person who fraudulently alters, assists in fraudulently altering, or procures to be fraudulently altered, anything contained in this declaration is guilty of a misdemeanour.

SHIP.

Name and official number.	Single, twin, triple or quadruple screw, or paddle, and registered horse-power.	Port of registry.	Gross tonnage.	Registered tonnage.
			Registered length in feet.	

Name and address of Owner, Managing Owner or Agent.	Intended voyage. Whether foreign-going or Home trade.

MASTER AND OFFICERS.

Rank.	Christian name or names.	Surname.	Number of Certificate.	Grade.
Master				
First Mate ..				
Second Mate ..				
First Engineer ..				
Second Engineer ..				
Third Engineer ..				

LIFE-SAVING APPLIANCES.

[Class under Life-Saving Appliances (Native Passenger Ships) Rules, 1929.]

Description.	Boats attached to davits.		Boats not attached to davits.		Total No. of boats.	Total No. of persons.
	No.	Persons.	No.	Persons.		
Life-boats Class 1						
,, ,, 2						
Boats ,, 3						
Motor Boats ..						
Other Boats ..						
Total ..						

	Description.	No.	Persons.
Life-rafts and Buoyant Apparatus.			
	Total ..		
Life-buoys — Total number.			
Life-buoys — Number with lights.			
Life-jackets — Adults			
Life-jackets — Children			

NOTE.—Cancel the portions of this Form that do not apply.

NUMBER OF PASSENGERS.

	Names of places where the passengers are carried or berthed.	Clear area of spaces if berths are not fitted.	Number of			Total.
			Persons due to area.	Fixed berths.	Passengers allowed	
Third Class or Deck.		Fair Season. Foul Season.			Fair Season. Foul Season.	
Second Cabin or Intermediate.						
First Class, Chief Cabin, or Saloon.						
					Total ..	

MACHINERY AND BOILERS.

ENGINES.						CYLINDERS.				
No.	Common, Compound, Triple Expansion or Quadruple Expansion or Turbine.	Surface, Common, or Non-Condensing.	Direct Acting or Geared.		Beam or Side Lever.	Year when made. / By whom made.	No.	Diameter.	Length of Stroke.	
			Vertical or Horizontal.	Diagonal or Oscillating.				Ins.	Feet.	Ins.

MACHINERY AND BOILERS—*contd.*

BOILERS.

——	No.	Whether of steel or iron; if partly of each, specify parts of which either metal is used.	By whom made.	Year when made.	Date when Surveyor last went inside these boilers.	Date when boilers were hydraulically tested and pressure applied and whether boilers were then in the ship or not.
Main ..						
Donkey ..						

NOTE.—Cancel the portions of this form that do not apply.

EVAPORATORS.

No.	Of what material made.	By whom made.	Year when made.	Maximum pressure of inlet steam.	Diameter of reduced orifice in reducing nozzle, if fitted.	Hydraulic Test.		
						Date when applied.	Pressure.	
							Shell.	Coils

COVERED IN AND LOCKED UP VALVES.					STEAM PIPES.	
	Description :—State whether dead weight, lever, spring, or other type.	By whom made.	Number on each boiler or evaporator.	Pressure : lbs. per square inch.	Date of hydraulic test. Main.	Pressure applied : lbs. per square inch.
Main Boilers ..						
Donkey Boilers ..					Auxiliary.	
Evaporators ..						

HULL.

Where built	When built	Extent of Double Bottom	Number of Water-tight Transverse Bulkheads extending to the Bulkhead Deck	Factor of Subdivision
Whether Steel, Iron, Wood or Composite				

MISCELLANEOUS PARTICULARS.

Date and place of the last external examination of the bottom	Date when propeller shafts were last inspected	Where classed Date of Load Line Certificate Is it still valid ?	Date of inspection of Ship's Register	Are anchors and chain cables in accordance with the regulations? Length and diameter of chain cables	Number of persons composing the crew

COMPASSES

No on board	Date of last adjustment	Date when ship was last swung for verification	Name and address, or name and rating of persons giving accompanying certificate of adjustment, verification, or correctness.

NOTE.—Cancel the portions of this Form that do not apply

DECLARATION TO BE MADE BY THE ENGINEER AND SHIP SURVEYOR.

I hereby declare:—

1. That on I completed the inspection of (*a*) the steam-ship of Official Number

2. That the hull and machinery are sufficient for the service intended and in good condition.

3. That the boats and other life-saving appliances, lights, signals, compasses, safety valves and fire extinguishing appliances are such and in such condition as are required by the Merchant Shipping Acts.

4. That the hull, machinery and equipments will, in my judgment, be sufficient until (*b*).

5. That the load to be placed on the safety valves should not exceed the pressure in lbs. per square inch stated on page 253 of this form, and that the safety valves have been adjusted accordingly.

6. That the vessel, as regards the hull, machinery, and equipments is, in my judgment, fit to ply

as a foreign-going passenger steamer;

within the limits of the Indian Home Trade.

7. That the vessel is, in my judgment, fit to carry the number of passengers stated on page 252 of this form, provided there is no encumbrance of the space measured for passenger accommodation.

8. That the certificates of the masters, mates and engineers are such as are required by the Merchant Shipping Acts.

Dated at ,

this day of 19 .

Engineer and Ship Surveyor.

SURVEYOR'S REMARKS.

Particulars of fees paid.			
Amount.	Date paid.	Port.	Builder's Number (in the case of new vessels).

NOTE.—Cancel the portions of this Form that do not apply.

(*a*) If the survey was partial, state what parts were surveyed.

(*b*) Insert date or dates.

DECLARATION TO BE MADE BY THE SHIP SURVEYOR.

I hereby declare:—

1. That on I completed the inspection of (*a*)

the S.S. of Official Number

2. That the hull is sufficient for the service intended and in good condition.

3. That the hull will in my judgment be sufficient until (*b*)

4. That the vessel, as regards the hull, is in my judgment fit to ply

as a foreign-going passenger vessel;

within the limits of the Indian Home Trade.

5. That the vessel is in my judgment fit to carry the number of passengers stated on page 252 of this form, provided there is no encumbrance of the space measured for passenger accommodation.

Dated at

this day of 19 .

Ship Surveyor.

SURVEYOR'S REMARKS.

NOTE. Cancel the portions of this Form that do not apply.

(*a*) If the survey was partial, state what parts were surveyed.
(*b*) Insert date or dates.

DECLARATION TO BE MADE BY THE SHIP (NAUTICAL) SURVEYOR.

I hereby declare:—

1. That on I completed the inspection of (*a*) the S.S. of Official Number

2. That the boats and other life-saving appliances, lights, signals and compasses are such and in such condition as are required by the Merchant Shipping Act.

3. That the boats and other life-saving appliances, lights, signals and compasses will in my judgment be sufficient until (*b*)

Dated at

the day of 19 .

Ship (Nautical) Surveyor.

SURVEYOR'S REMARKS.

NOTE.—Cancel the portions of this Form that do not apply.

(*a*) If the survey was partial, state what parts were surveyed.
(*b*) Insert date or dates.

NOTICE.

When this declaration has been completed by the Surveyor, it is to be given to the Owner or Master, who is required by section 135 of the Indian Merchant Shipping Act, 1923, to transmit it to the within *fourteen* days after the date of the receipt thereof. The same section provides that the Owner or Master shall forfeit a sum not exceeding five rupees *for every day* that the sending of the declaration is delayed beyond the period of fourteen days above specified.

---

*This declaration was given/sent by Post to the person named opposite, by the Surveyor whose signature it bears, on the date stated opposite. { Person / Date 19 .

This declaration was received this day of 19 . } by me

(State whether Owner or Master.)

And transmitted to the this day of 19 . } by me

(State whether Owner or Master.)

Port or Mercantile Marine Office to which the Certificate is to be sent .. ..

Name and address of the person to whom the Certificate is to be delivered on application

State whether Owner, Agent or Master of the Vessel

---

* To be filled in by the Surveyor.

After the Owner or Master has signed the above receipt for this Declaration, and has filled in the name of the Mercantile Marine Office to which he wishes the Certificate to be sent, he is to send the Declaration in an envelope addressed to the

---

When this Declaration has been received at the and is found satisfactory by Government and not until then, the Certificate in duplicate will be delivered through the Mercantile Marine Office named above, at which Office the Owner, Agent or Master named above for that purpose must apply for it and pay the necessary fee, expenses, and forfeiture (if any) charged under the Indian Merchant Shipping Act, 1923.

STATEMENT OF FEES AND EXPENSES.

	Rs. a. p.
Balance of Survey Fees	
Sunday and Holiday Fees	
Overtime Fees	
Other Charges	
Total ..	

FORM NO. 5-SURVEYS.

FORM OF NOTICE.

UNDER SECTION 136 (3) OF INDIAN MERCHANT SHIPPING ACT, 1923

(*See Rule 11.*)

MERCANTILE MARINE DEPARTMENT.

.... 193 .

To

....

S.S. " "

SIR,

I hereby give you notice that the Certificate of Survey of the above steam-ship applied for by is ready for delivery, and will be delivered at this office at any time during office hours on application and payment of the following sums, *viz* :—

	Rs	a.	p.
(*i*) Forfeiture under section 135(*3*) of the Indian Merchant Shipping Act, 1923 (XXI of 1923), for delay in excess of fourteen days in sending in the declaration, being at the rate of Rs 5 per day for days			
(*ii*) Balance of survey fees			
(*iii*) Sunday and holiday fees			
(*iv*) Overtime fees			
(*v*) Other charges			
Total .			

I have the honour to be,

SIR,

Your most obedient servant,

FORM NO. 6-SURVEYS.

FORM OF CERTIFICATE OF SURVEY

(See Rule 10.)

No.

CERTIFICATE OF SURVEY.

PASSENGER CERTIFICATE.

ISSUED UNDER ACT XXI OF 1923.

For —— *a FOREIGN-GOING* / *an INDIAN HOME TRADE* —— *Passenger Vessel.*

Steam / Motor } -Ship " " "

Owner or Agent

Port of Registry.	Official number.	Tonnage.	
		Gross.	Registered.

Number of Passengers and Crew.

Number of Passengers*.			Crew.	Total Passengers and Crew.
First Class.	Second Class.	Third Class and Deck (maximum permissible).		
		Fair Season.		
		Foul Season.		

*Notes 1—Two children under 12 years of age to be reckoned as one passenger.

2—All Cabin passengers are to have the use of sufficient promenade space on deck.

3—If any of the space measured for passengers is occupied by cargo, cattle or stores, the number of passengers for which the space so occupied was measured is to be deducted from the numbers stated above.

4—On any voyage on which this vessel may be cleared as a native passenger or pilgrim ship the number of passengers is governed by the certificate granted for that voyage, and not by this certificate.

BOATS AND LIFE-SAVING APPLIANCES.

Boats capable of accommodating ..	.. Persons
Buoyant apparatus capable of supporting ..	.. Persons.
Life-buoys	..
Life-jackets	..

THIS IS TO CERTIFY that the provisions of the Indian Merchant Shipping Act, 1923 (XXI of 1923), relating to the survey of the above-mentioned vessel and the transmission of the Declaration in respect thereof have been complied with, and that this vessel is fit to ply as a Foreign-going / an Indian Home Trade ship with the number of passengers stated above.

This Certificate, unless previously cancelled or suspended, remains in force until the day of 19 . If the Ship is then out of a port of survey, she must be surveyed and have a new Certificate before she begins to ply with passengers after her next subsequent return to a port of survey.

Signed by order of the Government of India, this

day of 19 .

Registered.

Either this Certificate, or the duplicate thereof, furnished by the Government of India is to be put up in a conspicuous part of the Ship where it will be visible to all persons on board the same, otherwise the Owner and Master shall each be liable to a fine which may extend to one hundred rupees.

If the number of passengers carried exceeds the number stated on this Certificate, the Master and Owner shall each be liable to the penalties prescribed by the law.

In case of any accident occasioning loss of life or any material damage affecting the seaworthiness or efficiency of the vessel either in the hull or in any part of the machinery, a report by letter signed by the Owner or Master is to be forwarded to the Principal Officer, Mercantile Marine Department, District, within 24 hours after arriving in port or as soon thereafter as possible.

N B.—Any communication addressed relative to this vessel should state the name, port of registry, and official number of the vessel and the number of this Certificate

A. RAISMAN,

Joint Secy. to the Govt. of India (offg.)

DEPARTMENT OF COMMERCE.

NOTIFICATIONS.

ACCOUNTANCY BOARD.

Simla, the 5th September 1931.

No. 213 (3)-T. & E. (A. B.).—The following draft of certain rules which it is proposed to make in exercise of the powers conferred by sub-section (2) of section 144 of the Indian Companies Act, 1913 (VII of 1913), is published, as required by the said sub-section, for the information of all persons likely to be affected thereby, and notice is hereby given that the said draft will be taken into consideration on or after the 9th day of November 1931.

Any objection or suggestion which may be received from any person with respect to the draft before the aforesaid date will be considered by the Governor General in Council.

Draft rules.

1. These rules may be called the Auditor's Certificates Rules, 193 .

2. In these rules, unless there is anything repugnant in the subject or context:—

(*a*) "Approved Accountant" means an accountant approved by the Governor General in Council for the purpose of taking articled clerks;

(*b*) "Auditor's Certificate" means a certificate granted under these rules entitling the holder to act as an auditor of companies throughout British India;

(*c*) "Graduate" means a graduate of a University constituted by law in British India or of the University of Mysore or of the Osmania University, or of a University in Great Britain and Northern Ireland;

(*d*) "The Register" means the Register of Public Accountants (India).

PART I.

MAINTENANCE OF AND ENROLMENT ON THE REGISTER.

3. The Governor General in Council shall maintain a Register of Public Accountants who shall be entitled to apply for certificates to practise as auditors of companies throughout British India. The name, residence and qualifications of every such accountant shall be entered in the Register with the date on which an auditor's certificate, if any, was granted to him.

4. A person shall not be eligible for enrolment on the Register if he—

(1) has been adjudged by a competent court to be of unsound mind;

(2) is an undischarged insolvent;

(3) being a discharged insolvent has not obtained from the court a certificate that his insolvency was caused by misfortune without any misconduct on his part;

(4) has been convicted by a competent court of any offence which is punishable under the Indian Penal Code and is under the provisions of the Code of Criminal Procedure, 1898, non-bailable; or

(5) having previously practised as a public accountant is considered by the Governor General in Council not to be a fit and proper person to be enrolled on the Register by reason of any act of negligence, misconduct or dishonesty committed in his professional capacity.

5. Subject to the provisions of Rule 4 and Rule 9, a person holding the Government Diploma in Accountancy, awarded on the recommendation of the Accountancy Diploma Board, Bombay, shall be entitled to be enrolled on the Register and may apply for enrolment on the Register at any time.

6. No person other than a person entitled to be enrolled on the Register shall be eligible for enrolment unless he has satisfied either—

(*a*) the tests prescribed in Part II of these rules, or

(*b*) a test recognised by the Governor General in Council as equivalent to the tests referred to in clause (*a*),

and has attained the age of twenty-one.

7. For the purposes of clause (*b*) of Rule 6, membership of any one of the following institutes and societies shall be recognised as equivalent to the tests prescribed in Part II:—

(1) The Institute of Chartered Accountants in England and Wales;

(2) The Society of Incorporated Accountants and Auditors, London;

(3) The Society of Accountants in Edinburgh;

(4) The Institute of Accountants and Actuaries in Glasgow;

(5) The Society of Accountants in Aberdeen; and

(6) The Institute of Chartered Accountants in Ireland.

8. Applicants for enrolment on the Register who are not entitled to enrolment under the second proviso to section 3 (1) of the Indian Companies (Amendment) Act, 1930, or under Rule 5, and who are not eligible for enrolment under Rule 6, will be required to satisfy the Governor General in Council that they are fit and proper persons for enrolment and have resided for not less than twelve months in India after attaining the age of eighteen.

9. (1) Every person enrolled on the Register shall pay an annual fee of Rs. 32. The annual fee shall be due and payable on the 1st April in each year.

(2) Every person, whose application for enrolment on the Register has been accepted shall before enrolment pay (*a*) an entrance fee of Rs. 150, and (*b*) a sum equivalent to the annual fee. Provided that the full amount of the entrance fee and half the amount of the

annual fee shall be payable before enrolment by a person enrolled on or after the 1st October and before the 1st April next following.

10. (1) Every person wishing to be enrolled on the Register shall submit an application to the Secretary to the Government of India, Department of Commerce, in Form A (Appendix 1).

(2) The applicant shall furnish such further information bearing on his application as the Governor General in Council may at any time require from him.

11. If the application is accepted by the Governor General in Council, an intimation to that effect shall be sent to the applicant along with a request for payment of the prescribed fees. On receipt of the prescribed fees, the applicant's name shall be enrolled on the Register and a certificate of enrolment in Form B (Appendix 1) issued to him.

12. A person enrolled on the Register shall be entitled to style himself "Registered Public Accountant (India)" and to use the letters and word "R. P. A. (India)" after his name as long as his name continues to appear on the Register. A firm shall not be entitled to style itself "Registered Public Accountants (India)" unless all of its partners resident in India are enrolled on the Register.

13. Every person enrolled on the Register may apply to the Governor General in Council for a certificate entitling him to act as an auditor of companies throughout British India. The certificate shall be in Form C (Appendix 1) and shall be valid for one year from the date of issue. No fee shall be payable for a certificate. Applications for the grant of certificates shall be addressed to the Secretary to the Government of India in the Department of Commerce. No application shall be necessary for the renewal of a certificate, but on the expiry of the period for which the original certificate was granted, a fresh certificate shall be sent to each accountant to whom a certificate was granted for the previous year provided that he remains enrolled on the Register and has paid the annual fee due under Rule 9.

14. (1) The Governor General in Council may remove permanently or temporarily from the Register the name of any person—

(*a*) from whom the annual fee has not been received on the expiry of three months from the date on which it became due;

(*b*) who becomes subject to any of the disabilities stated in sub-rules (1), (2), (3) and (4) of Rule 4; or

(*c*) whom the Governor General in Council has declared not to be a fit and proper person to remain enrolled on the Register by reason of any act of negligence, misconduct or dishonesty committed in his professional capacity, provided that before making such declaration the Governor General in Council shall call upon the person concerned to show cause why his certificate should not be cancelled, and shall make such further inquiry, if any, as he may consider necessary.

(2) The removal of the name of any person from the Register shall be notified in the *Gazette of India*.

15. An auditor's certificate shall be deemed to be cancelled from the date on which, and during the period for which, the name of its holder is removed from the Register.

16. The name of a person removed from the Register under Rule 14 (1) (*a*) may be restored to it at any time on receipt of all arrears on account of the annual fee from the applicant for restoration.

17. The fees prescribed by these rules shall be paid into the Imperial Bank of India at New Delhi.

18. The Register shall be published annually in the *Gazette of India* and copies of the Register shall be placed on sale.

PART II.

THEORETICAL TRAINING, EXAMINATION AND PRACTICAL TRAINING.

19. Persons wishing to qualify themselves for enrolment on the Register shall be required to pass the First and Final Examinations, prescribed and to serve under articles with an approved accountant for the periods and in the manner laid down in these rules.

FIRST EXAMINATION.

20. No candidate shall be admitted to the First Examination unless he—

(*a*) is a graduate, or

(*b*) has passed an examination entitling him to enter upon a course of studies at a University constituted by law in British India or the University of Mysore or the Osmania University or an examination recognised by the Governor General in Council as equivalent thereto and produces a certificate from the head of an institution recognised for the purpose by the Governor General in Council that he has, subsequently to passing such examination, studied for a period of one academic year at such an institution and is fit to present himself for the examination. Provided that a certificate of attendance at a recognised institution shall not be required of a candidate who has served under articles with an approved accountant for a period of not less than twelve months, or

(*c*) has served for not less than seven years as a clerk in the office of an approved accountant.

21. Every candidate for admission to the examination shall pay a fee of Rs. 30.

22. Candidates for the First Examination will be examined in the following subjects:—

Paper I. Book-keeping.—Theory and practice of Single and Double entry Book-keeping including the preparation of Production, Trading and Profit and Loss Accounts and Balance Sheets.

Paper II. Accountancy.—Departmental and Branch Accounts, Partnership and Company Accounts and Consignment and Joint Adventure Accounts.

Paper III. Mercantile Law.—Law relating to Contracts, Sale of Goods, Partnership and Arbitration.

Paper IV. Elements of Economics.—Subject matter of Economics, Fundamental conditions of material welfare, Natural resources, Human energy and capital.

Production regulated by Demand. The Laws of Demand and Supply, Market price, Normal price, Monopoly, Functions of money, Metallic money, Paper money,

Paper V. General Commercial Knowledge.—Charter Parties, Bills of Lading, Fire and Marine Insurance, Bills, Cheques, Documents of Title to Goods, Stocks, Shares and other securities, Commercial correspondence and elements of Secretarial Practice, Short methods of calculations.

FINAL EXAMINATION.

23. No candidates shall be admitted to the Final Examination unless he has

(*a*) passed the First Examination; and

(*b*) has either completed the period of service under articles prescribed by Rule 34 or is serving the last six months of the said period and has served for not less than eighteen months between the passing of the First Examination and the commencement of the Final Examination, or, if he was admitted to the First Examination under Rule 20 (*c*), has served for a further period of not less than eighteen months with an approved accountant after passing the First Examination.

Provided that a person holding on the date of commencement of the Final Examination a restricted certificate granted by a local Government entitling him to act as an auditor within a province and who has held such a certificate for a period of not less than seven years shall be eligible for admission to the Final Examination and shall not be required to have passed the First Examination or to have served any period under articles.

24. Every candidate for admission to the examination shall pay a fee of Rs. 50.

25. Candidates for the Final Examination will be examined in the following subjects:—

Paper I. Advanced Accounting including investigation of Accounts in connection with floatation, reconstruction, amalgamation and liquidation of Companies, Insolvency and Bankruptcy Accounts.

Paper II Special Classes of Accounts including Banks, Insurance Companies, Electric Companies and Double Account System.

Paper III. Costing.—Stores and Labour Accounts and Control. Preparation and Adjustment of Accounts for Income-tax purposes.

Paper IV. Auditing.

Paper V. Mercantile Law.—Law relating to Joint Stock Companies, Life Assurance Companies, Provident Societies and Income-tax.

Paper VI. Banking Law and Practice.—Law of Arbitration and Awards; Rights and Duties of Liquidators; Trustees and Receivers.

Paper VII. One of the following optional subjects to be selected by the candidate:—

(1) Elements of Public Finance and Statistics.

(2) Business Methods, Organisation and Finance.

(3) Currency, Banking and Foreign Exchange.

GENERAL.

26. The examinations shall be conducted by a Board of Examiners appointed for the purpose by the Governor General in Council and in such manner as the Governor General in Council may direct.

27. The First and the Final Examinations will ordinarily be held once in every year in the month of March at such places and times as may be notified by the Governor General in Council in the *Gazette of India.*

28. Applications for admission to an examination shall be made on the prescribed form which may be obtained from the Secretary to the Government of India in the Department of Commerce. Every such application together with the prescribed fee shall be sent so as to reach the Government of India between the 1st and 15th of January.

29. No fee paid for admission to an examination shall in any circumstances be refunded. If a candidate who has paid the prescribed fee is subsequently prevented from attending the examination for admission to which he has applied, the Governor General in Council may, if he is satisfied that the candidate was prevented from attending by circumstances beyond his control, permit the fee to be transferred to the next examination.

30. A notice stating the place, dates and times at which the candidate will be required to present himself for examination shall be sent to each candidate to the address given by him in his application so as to reach him not less than fourteen days before the commencement of the examination.

31. Every candidate passing the First or Final Examination shall be furnished with a certificate to that effect.

32. A list of successful candidates shall be published in the *Gazette of India* in alphabetical order after each examination and shall be sent to each candidate. The names of candidates obtaining distinction in the examination shall be indicated in the list. Candidates shall not be supplied with the

number of marks obtained by them in any paper but any candidate shall on application to the Secretary to the Government of India in the Department of Commerce be informed of the paper or papers in which he may have failed.

33. If a candidate is found to resort to unfair means during the conduct of an examination the Governor General in Council may, on receipt of a report to that effect by the Board of Examiners, remove the name of such candidate from the list of those entered for the examination and no candidate whose name has been so removed shall be admitted to the next subsequent examination held under these rules.

34. The period to be served under articles with an approved accountant shall be as follows—

(*a*) Graduates, and persons who, not being graduates, have passed the examination prescribed for the Government Diploma in Accountancy, three years.

(*b*) Others, five years.

For the purpose of this rule any period of apprenticeship served under the regulations for the award of the Government Diploma in Accountancy and duly registered with the Accountancy Diploma Board, Bombay, shall be reckoned as service under articles.

Approved Accountants and Articled Clerks.

35. A list of approved accountants shall be maintained by the Governor General in Council. The list shall be published once a year in the *Gazette of India* and copies of the list shall be placed on sale.

36. (1) No person shall be eligible for inclusion in the list of approved accountants unless he is enrolled on the Register and has been continuously in practice as a public accountant for a period of not less than three years next before the date of his application, or has been continuously employed for a period of not less than three years immediately before the date of his application as a salaried assistant to a practising public accountant.

(2) Applications for inclusion in the list shall be submitted through the local Government of the province in which the candidate has his head office to the Secretary to the Government of India in the Department of Commerce and shall contain full particulars of the candidate's, or of his employer's, practice, as the case may be, during the twelve months immediately preceding his application.

37. The Governor General in Council may remove from the list of approved accountants the name of any person who in his opinion is no longer a fit and proper person to employ articled clerks and such removal shall be notified in the *Gazette of India*.

38. (1) Each approved accountant may employ not more than two articled clerks at one time, provided that an approved accountant employing salaried assistants who are enrolled on the Register may employ additional articled clerks in the proportion of two clerks to each such assistant.

(2) An approved accountant may, on the decease of a partner in his firm, accept transfer, in accordance with Rule 44, of the articles of any clerk who was employed by the deceased partner at the time of his death and may continue to employ such clerk for the remainder of his term of service under articles in addition to the number of articled clerks already in his employment at the time of his partner's decease.

39. An approved accountant shall before accepting a person for service with him under articles satisfy himself by inspection of the relevant certificates that such person—

(*a*) will be not less than sixteen years of age on the date of commencement of his articles, and

(*b*) has passed the Matriculation Examination of a University constituted by law in British India or of the University of Mysore or of the Osmania University, or any other examination entitling him to enter upon a course of studies at any such University or an examination which has been declared by the Governor General in Council to be equivalent thereto.

40. The articles shall be executed in Form D or Form E (Appendix 2), according as the candidate for articled clerkship is of full age or is a minor, and shall be stamped. The articles together with the necessary documentary evidence showing that the conditions laid down in clauses (*a*) and (*b*) of Rule 39 are satisfied, shall within sixty days after the execution of the articles be sent to the Secretary to the Government of India in the Department of Commerce for registration and shall be accompanied by a fee of Rs. 10 and by a statement giving particulars of the name, father's name, residence and age of the articled clerk.

41. A register of articled clerks shall be maintained by the Governor General in Council.

42. No articled clerk shall, during the time of his service as articled clerk, except with the permission of the Governor General in Council, engage in any other business or occupation.

43. In the event of any complaint of misconduct being made against any articled clerk the Governor General in Council may, if he is satisfied that the complaint is proved, direct the cancellation of the articles, and a person whose articles have so been cancelled shall not be retained or taken as an articled clerk by any approved accountant.

44. In the event of the name of an employer of an articled clerk being removed from the list of approved accountants or if he ceases to practise, the articles may be transferred to another approved accountant and the transfer shall be reported to the Secretary to the Government of India in the Department of Commerce. In the like events or in the event of the death of the employer the articled clerk may enter into fresh articles for the remainder of his term of service. Such fresh articles shall be sent for registration as provided in rule 40 but shall not require the payment of any fee.

45. Articles may by agreement between the articled clerk and his employer be assigned to another employer. Such an assignment shall be subject to the provisions of rule 40 regarding registration and the payment of a fee.

46. Pending the publication of the first list of approved accountants and for a period of thirty days thereafter, an accountant who was permitted immediately before the commencement of these rules to take apprentices for training for the Government Diploma in Accountancy may employ articled clerks in accordance with these rules. Provided that, if his name shall not have been included in the list of approved accountants, he shall, at the request of an articled clerk employed by him, permit the assignment of the articles of such clerk to an accountant included in the list of approved accountants and shall refund to such clerk a proportion of any premium received from him equal to the proportion which the unexpired period of the articles bears to the total period of such articles.

PART III.

THE INDIAN ACCOUNTANCY BOARD.

47. The Indian Accountancy Board shall consist of not less than fifteen and not more than twenty members appointed by the Governor General in Council. Two members shall be persons in the service of Government and of the remainder not less than two-thirds shall be professional accountants.

48. One of the members in the service of Government shall be appointed Chairman of the Board by the Governor General in Council

49. The Secretary to the Board shall be appointed by the Governor General in Council and shall not be a member of the Board.

50. (1) Save as otherwise provided in these rules, a member of the Board other than a member who is in the service of Government, shall hold office for three years from the date of his appointment.

(2) A member appointed to fill a casual vacancy shall hold office so long as the member whose place he fills would have been entitled to hold office if the vacancy had not occurred.

51. A member, other than a member who is in the service of Government, may resign his office by letter addressed to the Secretary to the Government of India in the Department of Commerce.

52. (1) Before a member, other than a member who is in the service of Government, leaves India—

(*a*) he shall intimate to the Secretary to the Government of India in the Department of Commerce the date of his departure from and the date of his expected return to India, and

(*b*) if he intends to be absent from India for a period longer than six months, he shall tender his resignation or apply for leave of absence. On receipt of such application the Governor General in Council may at his discretion grant leave of absence, or, if he considers it necessary, treat the member's office as vacant and appoint another member thereto.

(2) If any member, other than a member who is in the service of Government, leaves India without taking either of the courses mentioned in sub-rule (1) he shall be deemed to have resigned his office with effect from the date of his departure from India.

53. A member, other than a member in the service of Government, shall be deemed to have vacated his seat on the Board—

(*a*) if he becomes subject to any of the disabilities stated in sub-rules (1), (2), (3) and (4) of Rule 4, or

(*b*) If he is absent from two consecutive meetings of the Board without special leave of absence from the Chairman of the Board.

54. The Board shall meet as often as may be required, provided that a meeting shall be held at least once a year. The place of meeting shall be at the headquarters of the Government of India or at such other place as the Chairman may think fit.

55. Twenty-one days at least before any meeting of the Board, notice of the time and place of the intended meeting shall be sent to the usual place of residence of every member of the Board and such notice shall, so far as practicable, contain a statement of the business to be transacted at such a meeting, provided that in cases of urgency an emergent meeting may be summoned at any time by the Chairman who shall inform members of the subject matter for discussion and the reasons for which he considers it to be urgent.

56. The Chairman shall preside at every meeting at which he is present and, if he is absent, the members present shall elect one of their number to preside over the meeting.

57. No business shall be transacted at a meeting of the Board unless there are present at least eight members.

58. Any question which the Board is required to take into consideration may, if the Chairman so decides, be referred to the members by circulation of the papers.

59. The Board may appoint committees constituted from among the members to report to the Board in regard to particular matters included within the scope of its functions or to advise and assist the Governor General in Council in regard to any such matter. Every such committee shall consist of not less than five members, of which three shall form a quorum.

60. Minutes shall be made of the proceedings of meetings of the Board and of the committees thereof and every minute signed by the Chairman of the meeting to which it relates, or by the Chairman of the next subsequent meeting, shall be submitted to the Governor General in Council.

61. Members of the Board (other than members who are in the service of Government and are entitled to travelling and daily allowances under the ordinary rules) shall receive a first class fare to and from the place of

meeting and a fee of Rs. 50 per diem for each day of absence from their places of residence. The members resident at the place of meeting shall receive a fee of Rs. 50 for each day on which they attend a meeting.

PART IV.

Local Accountancy Boards.

62. The Governor General in Council may constitute a Local Accountancy Board for any area and may designate the headquarters of each Local Accountancy Board so constituted.

63. A Local Accountancy Board shall consist of not less than three and not more than eight members who shall be appointed by the Governor General in Council on the recommendation of the local Government concerned. Provided that, in addition to the members so appointed, a member of the Indian Accountancy Board shall be *ex-officio* a member of the Local Accountancy Board for the area in which he ordinarily resides.

64. The Chairman of a Local Accountancy Board shall be a member of the Indian Accountancy Board and shall be appointed by the Governor General in Council.

65. (1) Save as otherwise provided in these rules, a member, other than a member who is in the service of Government or who is a member *ex-officio*, shall hold office for three years from the date of his appointment.

(2) A member appointed to fill a casual vacancy shall hold office so long as the member whose place he fills would have been entitled to hold office if the vacancy had not occurred.

66. A member, other than a member who is in the service of Government or who is a member *ex-officio*, may resign his office by letter addressed to the Secretary to the Government of India in the Department of Commerce.

67. (1) Before a member, other than a member who is in the service of Government or who is a member *ex-officio*, leaves India,

(*a*) he shall intimate to the Secretary to the Government of India in the Department of Commerce the date of his departure and the date of his expected return to India, and

(*b*) if he intends to be absent from India for a period longer than six months he shall tender his resignation or apply for leave of absence. On receipt of such an application the Governor General in Council may at his discretion grant leave of absence or, if he considers it necessary, treat the member's office as vacant and appoint another member thereto.

(2) If any member to whom sub-rule (1) applies leaves India without taking either of the courses mentioned in that sub-rule he shall be deemed to have resigned his office with effect from the date of his departure from India.

68. A member, other than a member who is in the service of Government or who is a member *ex-officio*, shall be deemed to have vacated his seat on a Board—

(*a*) if he becomes subject to any of the disabilities stated in sub-rules (1), (2), (3) and (4) of Rule 4, or

(*b*) if he is absent from two consecutive meetings of the Board without special leave of absence from the Board.

69. Fourteen days at least before any meeting of the Board notice of the time and place of the intended meeting shall be sent to the usual place of residence of every member of the Board and such notice shall, so far as practicable, contain a statement of the business to be transacted at such a meeting, provided that in cases of urgency an emergent meeting may be summoned at any time by the Chairman who shall inform members of the subject matter for discussion and the reasons for which he considers it to be urgent.

70. The Chairman shall preside at every meeting at which he is present and, if he is absent, the members present shall elect one of their number to preside over the meeting, provided that the Chairman shall be a member of the Indian Accountancy Board if any such member is present at the meeting.

71. Every question placed before the Board for decision shall, in the event of a difference of opinion, be decided by a majority of votes, and in case of equality of votes the Chairman shall have a casting vote in addition to his original vote.

72. No business shall be transacted at a meeting unless there are present at least half the total number of members, appointed and *ex-officio*. Provided that, if the total number of such members is less than six, three members shall form a quorum.

73. Any question which the Board is required to take into consideration may, if the Chairman considers it necessary, be referred to the members by circulation of the papers.

74. Minutes shall be made of the proceedings of meetings of the Board and of the Committees thereof and every minute signed by the Chairman of the meeting to which it relates, or by the Chairman of the next subsequent meeting, shall be submitted to the Governor General in Council.

75. Members of the Board other than members who are in the service of Government and are entitled to travelling and daily allowances under the ordinary rules shall receive a first class fare to and from the place of meeting and a fee of Rs. 50 per diem for each day of absence from their places of residence. The members resident at the place of meeting shall receive a fee of Rs. 50 for each day on which they attend a meeting.

APPENDIX 1.

FORM A.

Form of Application for enrolment on the Register of Public Accountants (India).

(*See* Rule 10.)

To

The Secretary to the Government of India,
Department of Commerce,
Simla/New Delhi.

SIR,

I beg to offer myself for enrolment on the Register of Public Accountants (India).

1. Name in full:
2. Age last birthday*:
3. Father's name:
4. Residential address:
5. Place or places of business:
6. Date of commencement of practice:
7. If a partner, state name of firm:
8. Period of residence in British India:
9. Particulars of qualifications†:
10. Occupation in full:
11. State whether at any time debarred from practising as an auditor:

I beg to remain, etc.,

Date:

FORM B.

GOVERNMENT OF INDIA.

DEPARTMENT OF COMMERCE.

Certificate of enrolment on the Register of Public Accountants (India).

(*See* Rule 11.)

No.....

This is to certify that.....residing at.....in the province of..... was enrolled on this.....day of 193..., on the Register of Public Accountants (India) maintained under the authority of the Government of India.

Dated this.....day of.....19 .

By order of the Governor General in Council.

Seal

Secretary to the Government of India,
Department of Commerce.

*Applicants may be required to produce evidence of their age.

†Originals or duly certified copies of diplomas, certificates and other documents in support of qualifications claimed must be sent with the application.

FROM C.

Auditor's Certificate.

(*See* Rule 13.)

This is to certify that..... .....residing at.....is entitled to be appointed and to act as an auditor of companies throughout British India. This certificate is valid for one year from the date hereof.

Dated this.....day of.....19 .

By order of the Governor General in Council.

Seal

Secretary to the Government of India,
Department of Commerce.

APPENDIX 2.

FROM D.

(For use when the candidate is of full age.)

(*See* Rule 40.)

Articles of Apprenticeship made the..... day of.....One thousand nine hundred and.....between.....of ..... an approved accountant under the Auditor's Certificates Rules, 193..., ...(hereinafter called the Employer) of the one part and..... (hereinafter called the Candidate) of the other part.

Witness as follows that is to say:—

1. In consideration of the covenants by the Candidate hereinafter contained and of the premium of Rs.....paid by the Candidate (the receipt whereof the Employer doth hereby acknowledge) the Employer agrees to take the Candidate as his articled clerk for the term of.....years from the date of this deed.

2. The Candidate of his own free will binds himself articled clerk to the Employer to serve him from the day of the date hereof for and during and unto the full end and term of years.

3. The Candidate covenants with the Employer as follows:—

(*a*) That he will at all times during the said term diligently and faithfully serve the Employer as his articled clerk in the practice or profession of accountancy.

(*b*) That he will not at any time during the said term destroy cancel obliterate spoil embezzle spend make away with or take copies of books papers plans documents monies stamps or chattels of the Employer his personal representatives or assigns or of his partner or partners or of any of his clients or employers which shall be deposited in his hands or which shall come to his care custody or possession or allow any of the said goods to be so treated by others if he can by the exercise of reasonable care prevent it.

(*c*) That he will at all times keep the secrets of the Employer and his partner or partners and of his and their clients and employers and will not divulge the names and affairs of such clients and employers.

(*d*) That he will readily and cheerfully obey and execute the lawful and reasonable commands of the Employer and will not depart or absent himself from the service or employ of the Employer at any time during the said term without his consent or that of his partners first obtained but will at all times during the said term conduct himself with all due diligence honesty and propriety.

(*e*) That he will at all times well and faithfully serve the Employer as an articled clerk ought to do in all things whatsoever.

(*f*) That he will make good and fully indemnify the Employer for any loss or damage suffered or sustained by his the Candidate's misbehaviour or improper conduct.

4. The Employer covenants with the Candidate as follows:—

(*a*) That he will by the best ways and means in his powers and to the utmost of his skill and knowledge instruct or cause to be instructed the Candidate and afford him such reasonable opportunities and work as may be required to enable him to acquire the art science and knowledge of accountancy.

(*b*) That he will at the expiration of the said term use his best means and endeavours at the request cost and charges of the Candidate to cause the Candidate to be enrolled on the Register of Public Accountants (India) pursuant to the Auditor's Certificates Rules, 193 . Provided always that the Candidate shall have well and faithfully served his intended clerkship and shall have passed the required examinations and in all respects properly qualified himself to be enrolled on the said Register.

(*c*) That if the Employer shall die or cease to practise as an accountant or cease to be borne on the list of approved accountants maintained under the Auditor's Certificates Rules, 193 , during the said term he or his personal representatives shall at the option of the Candidate either return a proportionate part of the premium or without any further expense to the Candidate make the necessary arrangements for the completion of the residue of the term as articled clerk to some other.

(*d*) That he will allow the Candidate leave of absence for each year of completed service a period aggregating not more than 30 days.

In Witness whereof the parties have hereunto set their hands and seals the day and year first above written.

Signed Sealed and Delivered

by

in the presence of—

Signed Sealed and Delivered

by

in the presence of—

FORM E.

(For use when the candidate is a minor.)

(*See* Rule No. 40.)

Articles of Apprenticeship made the..... day of.....One thousand nine hundred and.....*between*.....of .....an approved accountant under the Auditor's Certificates Rules, 193..., ...(hereinafter called the Employer) of the first part,..... (hereinafter called the Guardian) of the second part and.....(hereinafter called the Candidate) of the third part.

Witness as follows that is to say:—

1. In consideration of the covenants by the Candidate and Guardian respectively hereinafter contained and of the premium of Rs.....paid by or on behalf of the Candidate (the receipt whereof the Employer doth hereby acknowledge) the Employer agrees to take the Candidate as his articled clerk for the term of.....years from the date of this deed.

2. The Candidate of his own free will and with the consent of the Guardian binds himself articled clerk to the Employer to serve him from the day of the date hereof for and during and unto the full end and term of... years.

3. The Candidate covenants with the Employer as follows:—

(*a*) That he will at all times during the said term diligently and faithfully serve the Employer as his articled clerk in the practice or profession of accountancy.

(*b*) That he will not at any time during the said term destroy cancel obliterate spoil embezzle spend make away with or take copies of books papers plans documents monies stamps or chattels of the Employer his personal representatives or assigns or of his partner or partners or of any of his clients or employers which shall be deposited in his hands or which shall come to his care custody or possession or allow any of the said goods to be so treated by others if he can by the exercise of reasonable care prevent it.

(*c*) That he will at all times keep the secrets of the Employer and his partner or partners and of his and their clients and employers and will not divulge the names and affairs of such clients and employers.

(*d*) That he will readily and cheerfully obey and execute the lawful and reasonable commands of the Employer and will not depart or absent himself from the service or employ of the Employer at any time during the said term without his consent or that of his partners first obtained but will at all times during the said term conduct himself with all due diligence honesty and propriety.

(*e*) That he will at all times well and faithfully serve the Employer as an articled clerk ought to do in all things whatsoever.

(*f*) That he will make good and fully indemnify the Employer for any loss or damage suffered or sustained by his the Candidate's misbehaviour or improper conduct.

4. The Guardian covenants with the Employer as follows:—

That he will indemnify the Employer his partner or partners and all or any of them in case the Candidate shall act contrary to the last-mentioned covenant and the Employer or his partners shall suffer thereby any loss damage or prejudice.

5. The Employer covenants with the Candidate and the Guardian as follows:—

(*a*) That he will by the best ways and means in his power and to the utmost of his skill and knowledge instruct or cause to be instructed the Candidate and afford him such reasonable opportunities and work as may be required to enable him to acquire the art science and knowledge of accountancy.

(*b*) That he will at the expiration of the said term use his best means and endeavours at the request cost and charges of the Candidate and the Guardian or either of them to cause the Candidate to be enrolled on the Register of Public Accountants (India) pursuant to the Auditor's Certificates Rules, 193 . Provided always that the Candidate shall have well and faithfully served his intended clerkship and shall have passed the required examinations and in all respects properly qualified himself to be enrolled on the said Register.

(*c*) That if the Employer shall die or cease to practise as an accountant or cease to be borne on the list of approved accountants maintained under the Auditor's Certificates Rules, 193 , during the said term he or his personal representatives shall at the option of the Candidate either return a proportionate part of the premium or without any further expense to the Candidate make the necessary arrangements for the completion of the residue of the term as articled clerk to some other.

(*d*) That he will allow the Candidate leave of absence for each year of completed service a period aggregating not more than 30 days.

In Witness whereof the parties have hereunto set their hands and seals the day and year first above written.

Signed Sealed and Delivered

by

in the presence of—

Signed Sealed and Delivered

by

in the presence of—

Signed Sealed and Delivered

by

in the presence of—

No. 213 (3)-T. and E. (A.B.).—The following draft of certain rules which it is proposed to make in exercise of the powers conferred by sub-section (2) of section 3 of the India Companies (Amendment) Act, 1930 (XIX of 1930), is published, as required by the said sub-section, for the information of all persons likely to be affected thereby, and notice is hereby given that the said draft will be taken into consideration on or after the 9th day of November 1931.

Any objection or suggestion which may be received from any person with respect to the draft before the aforesaid date will be considered by the Governor General in Council.

Draft rules.

1. These rules may be called the Restricted Certificates Rules, 193 .

2. Every person holding a temporary or permanent restricted certificate granted by a local Government entitled him to act as an auditor within a province shall, within three months of the commencement of these Rules, send his certificate, or a duly certified copy thereof, to the Secretary to the Government of India in the Department of Commerce. Original certificates will be returned to the holders after the particulars entered in them have been noted.

In the month of April in each succeeding year every holder of a restricted certificate intending to continue to practise as an auditor shall send a report to that effect to the Secretary to the Government of India in the Department of Commerce.

3. (1) Every holder of a restricted certificate, whether such certificate is temporary or permanent, entitling the holder to act as an auditor within a province may continue so to act. Provided that the Governor General in Council may at any time suspend or cancel such a certificate if the holder

(*a*) has been adjudged by a competent court to be of unsound mind;

(*b*) is an undischarged insolvent;

(*c*) being a discharged insolvent has not obtained from the court a certificate that his insolvency was caused by misfortune without any misconduct on his part;

(*d*) has been convicted by a competent court of any offence which is punishable under the Indian Penal Code and is under the provisions of the Code of Criminal Procedure, 1898, non-bailable; or

(*e*) has been declared by the Governor General in Council not to be a fit and proper person to act as an auditor of the accounts of public companies by reason of any act of negligence, misconduct or dishonesty committed in his professional capacity, provided that before making such declaration the Governor General in Council shall call upon the holder to show cause why his certificate should not be cancelled, and shall make such further inquiry, if any, as he may consider necessary.

(2) The suspension or cancellation of a certificate shall be notified in the local official *Gazette*.

J. C. B. DRAKE,
Secy. to the Govt. of India.

LEGISLATIVE DEPARTMENT.

NOTIFICATION.

Simla, the 1st September, 1931.

No. F. 408/31-C. & G.—In exercise of the powers conferred by rule 9 of the Legislative Assembly Electoral Rules, the Governor General in Council is pleased to direct that the following further amendments shall be made in the Legislative Assembly (Bengal) Electoral Regulations published with the notification of the Government of India in the Legislative Department No. 185, dated the 17th August, 1923, namely:—

1. In clause (1) of regulation 10A of the said regulations for the words "The registering authority shall" the following shall be substituted, namely:—

"The registering authority, or in any case where the registering authority is a Commissioner of a Division or the Member, Board of Revenue, his agent employed under regulation 5, shall"

2. In regulation 16 of the said regulations for the words "to the registering authority who" the words "to the registering authority and to the agent, if any, employed under regulation 5, and such registering authority or agent" shall be substituted.

L. GRAHAM,
Secy. to the Govt. of India.

DEPARTMENT OF INDUSTRIES AND LABOUR.

Public Works Branch.

NOTIFICATION.

Simla, the 3rd September 1931.

No. E-10.—Mr. H. W. Irwin, whose appointment to the Indian Service of Engineers as an Assistant Executive Engineer on probation was announced in this department notification No. E-22, dated the 17th February 1930, is confirmed in his appointment.

T. RYAN,
Joint Secy. to the Govt. of India.

DEPARTMENT OF INDUSTRIES AND LABOUR.

NOTIFICATION.

Simla, the 1st September 1931.

No. S.-618.—The following draft of a further amendment in the Indian Electricity Rules, 1922, which it is proposed to make in exercise of the powers conferred by section 37 of the Indian Electricity Act, 1910 (IX of 1910), is published, as required by section 38 of the said Act, for the information of all persons likely to be affected thereby, and notice is hereby given that the said draft will be taken into consideration on or after the 10th December 1931.

Any objection or suggestion which may be received in respect of the draft before the date specified will be considered by the Governor-General in Council:—

Draft amendment.

Rule 9 of the said Rules shall be renumbered "9 (*1*)" and to the said rule as so renumbered the following sub-rule shall be added, namely:—

"(*2*) If the application for a license is rejected, the Local Government may at its discretion refund, wholly or, in part, the fee referred to in clause (*g*) of sub-rule (*1*)".

J. A. SHILLIDY,

Secy. to the Govt. of India.

FINANCE DEPARTMENT (CENTRAL REVENUES).

NOTIFICATION.

SALT.

Simla, the 5th September 1931.

No. 23.—In exercise of the powers conferred by section 28 of the Indian Salt Act, 1882 (XII of 1882), and by section 2 of the Indian Salt Duties Act, 1908 (X of 1908), and in modification and partial supersession of the rules published with the notification of the Government of India in the Department of Industries, No. B.-316, dated the 14th October 1922, hereinafter referred to as the said rules, the Governor General in Council is pleased to make the following rules:—

(1) Every credit account opened, or continued after adjustment, on or after the 1st of October 1931, under the said rules shall be adjusted and closed on the expiry of three months from the date on which it was opened or continued.

(2) No credit account shall be opened under the said rules after the 31st of March 1932.

A. H. LLOYD,

Joint Secy. to the Govt. of India.

CENTRAL BOARD OF REVENUE.

NOTIFICATION.

SALT.

Simla, the 5th September 1931.

No. 24.—In exercise of the powers conferred by section 2 of the Indian Salt Duties Act, 1908 (X of 1908), read with the notification of the Government of India in the Finance Department (Central Revenues), No. 797, dated the 29th March 1924, and in modification and partial supersession of the rules published with the notification of the Government of Bengal in the Financial Department, No. 338, dated the 2nd April 1909, hereinafter referred to as the said rules, the Central Board of Revenue makes the following rules:—

(1) Every credit account that has been continued after adjustment under rule 10 (2) (*a*) of the said rules before the 1st of October 1931 and remains open on that date, shall for the purposes of rule 10 (1) of the said rules be deemed to have been opened on the date on which it was so continued.

(2) Every credit account opened, or continued after adjustment, on or after the 1st of October 1931 under the said rules shall be adjusted and closed on the expiry of three months from the date on which it was opened or continued.

(3) No credit account shall be opened under the said rules after the 31st of March 1932.

RAM NATH,

Secy., Central Board of Revenue (offg.).

Ripon Law College.

Bashir Ullah.
Basu, Amarkumar.
30 „ Amulyachandra.

University Law College.

Basu, Ardhendusekhar.
„ Asokananda.
„ Bimalendu.
„ Gobindacharan.
„ Jitendranath.
„ Kamalkumar.
„ Saurendrakumar.
„ Saurindranath.
„ Sudhanyakumar.

Non-collegiate student (University Law College).

40 Basu, Upendranath.
Bhaduri, Tridibnath.

University Law College.

Bhattacharyya, Asitnath.
„ Bibhutibhushan.
„ Binaykumar.
„ Dineschandra.
„ Durgacharan.
„ Jagadindranath.
„ Pranabanada.
„ Radhakanta.
50 „ Ramaday.
„ Satyaprasanna.
„ Sudhirchandra.
„ Surendranath.
„ Taraknath.
„ Taraprasanna.
Bhuniya, Sasibhushan.
Biswanghri, Sachindramohan.

Non-collegiate student (Earle Law College, Gauhati).

Biswas, Amarendranath.

University Law College.

Biswas, Asaranjan.
60 „ Bhabendranath.

Ripon Law College.

Biswas, Indubhushan.
„ Jaminimohan.
„ Kalipada.
„ Kantibhushan.

University Law College.

Biswas, Manindranath.

Ripon Law College.

Chaklanabis, Birajmohan.

University Law College.

Chakrabarti, Ardhendusekhar.

Ripon Law College.

Chakrabarti, Bidhubhushan.

University Law College.

Chakrabarti, Bijaykrishna.
70 „ Gurupada.
„ Haridas.
„ Herambanath.

Ripon Law College.

Chakrabarti, Krishnalal.

University Law College.

Chakrabarti, Manindranath.

Ripon Law College.

Chakrabarti, Narendrakisor.

University Law College.

Chakrabarti, Rebaticharan.
„ Sarojkumar.
„ Sudhirchandra.
„ Surendrakumar.
80 Chattopadhyay, Amritlal.
„ Asitbaran.
„ Atulchandra.
„ Dhurjjatinaruyan.
„ Durgadas.
„ Hrishikes.
„ Kalidas, I.
„ Kalidas, II.
„ Manoranjan.
„ Nagendranath.
90 „ Panchugopal.
„ Sailendrakrishna.
„ Sudhansukumar.
„ Taraprasad.

Earle Law College, Gauhati.

Chaudhuri, Bansidhar.
„ Dharanidhar.
„ Golapchandra.

University Law College.

Chaudhuri, Jatinath.
„ Jyotsnanath.
„ Kalidas.
100 „ Nandagopal.
„ Subodhchandra.
Dalal, Bholanath.

Ripon Law College.

Dalilur Rahman.

University Law College.

Dan, Bimalasankar.
„ Girijakumar.
Das, Baidyanath.
„ Bijaychandra.
„ Durgesprasad.
„ Girindranath.
110 „ Jugalchandra.
„ Jyotirlal.
„ Santoshkumar.
Dasgupta, Amulyaratan.
„ Bhupendranath.
„ Jnanprasanna.
„ Praphullachandra.
„ Rabiranjan.
„ Sudhansukumar.
Datta, Amulyakrishna.
120 „ Bhabanath.
„ Kaliprasanna, I.

Earle Law College, Gauhati.

Datta, Manoranjan.

University Law College.

Datta, Manibhushan.
Datta, Niradbaran.

Earle Law College, Gauhati.

Datta, Prabhatchandra.

University Law College.

Datta, Saileskumar.
„ Saradindubikas.
„ Sarojkumar.

Non-collegiate student (University Law College).

Datta, Saurendranath.

Ripon Law College.

130 Dattagupta, Anilkumar.

Non-collegiate student.

Dawson, Bhagyasundari.

University Law College.

De, Jatindrachandra.
„ Sudhansukumar.
Deb, Jayantabilas.
Gangopadhyay, Anandagopal.
„ Sudhamay.
Ghosh, Birendrakumar.
„ Chittaranjan.

Ripon Law College.

Ghosh, Gauriprasad.

University Law College.

140 Ghosh, Janendranath.

Non-collegiate student (Ripon Law College).

Ghosh, Kisorimohan.

University Law College.

Ghosh, Kshirodchandra.

Ripon Law College.

Ghosh, Manmathanath.

Non-collegiate student (University Law College).

Ghosh, Manomohan.

University Law College.

Ghosh, Niharranjan.
„ Saradindu.
Ghoshal, Sudhagaur.

Earle Law College, Gauhati.

Gohainbarua, Gopalsinha.

University Law College.

Guha, Anilkumar.
150 „ Satyaranjan.
Guhathakurta, Sachindramohan.
Gupta, Binaybhushan.
„ Birendrakumar.
„ Jibendrakumar.
„ Rajendrachandra.
„ Upendranath.

Earle Law College, Gauhati.

Hajarika, Radhanath.

University Law College.

Haldar, Mahananda.

Ripon Law College.

Haldar, Matindranath.

University Law College.

160 Hariharnath Singh.
Kabasi, Harendranath.
Kar, Tarapada.
Kazem Uddin Ahmed.

Ripon Law College.

Khimkaran Bhuturia.

University Law College.

Kundu, Priyanath.
Lahuri, Rebatimohan.

Earle Law College, Gauhati.

Lekharu, Upendrachandra.

University Law College.

Mahapatra, Birendrakumar.
Mahomed Entaj Ali.
170 Maitra, Prabodhchandra.
„ Sisirkumar.
Majumdar, Arabinda

Non-collegiate student (University Law College).

Majumdar, Binaybhushan.

Ripon Law College.

Majumdar, Jaminibhushan

University Law College.

Majumdar, Manimohan.

Ripon Law College.

Majumdar, Manishchandra.

University Law College.

Majumdar, Pramatharanjan.
„ Ramsankar.
„ Sailajabhushan.
180 „ Satyagopal.
Mallik, Biswanath.
„ Phanindrachandra.
Mandal, Krishnadas.
„ Satischandra.
Manna, Binodbihari.
„ Debendranath.

Ripon Law College.

Md. Almas Ruhu Buksh.
Md. Tahir Barbora.

University Law College.

Medhi, Kandarpeswar.

Ripon Law College.

190 Miazan Ali Khan.

University Law College.

Mitra, Biswanath.

Ripon Law College.

Mitra, Dhirendranath.

University Law College.

Mitra, Dinabandhu.
„ Haranchandra.
„ Kshitischandra.
„ Praphullakumar.

Ripon Law College.

Mitra, Nripendranath

University Law College.

Mitra, Satyabijay.
„ Sitansujiban.

Ripon Law College.

200 Mohammad Ashraf Ali Sardar.
„ Monowar.

University Law College.

Mohammed Saadat Ali.

Non-collegiate student (Ripon Law College).

Mohinta, Harendranath.

University Law College.

Muhammad Baduzzaman.
„ Najmul Huque.

Ripon Law College.

Muhammed Ziller Rohman.

University Law College.

56 Chattopadhyay, Gopaldas.

Non-collegiate student (University Law College).

Sarma, Narayanchandra.

Ripon Law College.

Sengupta, Bidyutkumar.

University Law College.

59 Bandyopadhyay, Hemantakumar.

Ripon Law College.

Chakrabarti, Haripada.

University Law College.

Datta, Arunkumar.
Mitra, Debendranath.
Sengupta, Pramodranjan.

Ripon Law College.

Syed Md. Eshanul Huque.

University Law College.

65 Chattopadhyay, Harischandra.
Goswami, Anilkrishna.
Ray, Sankarnath.
68 Basu, Sudhirkumar.
Chattopadhyay, Nilkantha.
Datta, Sachindranath.
Ghosh, Ramendranath.
72 Chakrabarti, Niharranjan.
Chaudhuri, Nirmalchandra.
Dan, Prabhatchandra.
Gangopadhyay, Prabhatkumar.
Lahiri, Kanchanlal.
Sinha, Trilochan.
78 Basu, Kesabchandra.
Beni Shankar Sharma.
Ghosh, Gosthabihari.
Majumdar, Rajendrachandra.
82 Chattopadhyay, Sarojkumar.

Ripon Law College.

Das, Prabhaschandra.

University Law College.

Guha, Jatischandra.
Gupta, Purnendu.
Sarkar, Parbaticharan.
Sengupta, Sudhirkumar.

Ripon Law College.

88 Baksi, Satischandra.

University Law College.

Basu, Bipannapalak.
Lahiri, Kamakshyachandra.
Mitra, Anangabijay.
Niyogi, Upendranarayan.

Ripon Law College.

Pal, Kanailal.
Sirsmani, Pramadanath.

University Law College.

95 Chakrabarti, Haranchandra.
Ghosh, Sukumar.
97 Abdul Jabbar.
Das, Nirmalchandra.
De, N. Nanigopal.
Haldar, Bharatibikas.
Mukhopadhyay, Sanjaykumar.

Ripon Law College.

102 Bhattacharyya, Dhirendranath.

University Law College.

Dasgupta, Manindranath.
Guha, Praphullaranjan.

Ripon Law College.

Sen, Ranadhir.

University Law College.

106 Dagra, Santoshchandra.
Datta, Dineschandra.

Non-collegiate student (University Law College).

Ray, Bibhutibhushan.

University Law College.

Sen, Jitendranath.
110 Basu, Jitendrakumar, II.
Chanda, Sudhansumohan.

Ripon Law College.

Sengupta, Subodhchandra.

University Law College.

113 Abu Eusofe.
Chattopadhyay, Amiyakumar.
Dhuman Sinha.
Mitra, Baidyanath.
Mukhopadhyay, Makhanlal.
Nizam Uddin Ahmed.

Ripon Law College.

119 Bhaumik, Praphullakumar.
Datta, Jatindrakumar.

University Law College.

Datta, Mrigendranath.
Lahiri, Rabindranath.

Non-collegiate student (University Law College).

123 Mallik, Radhanath.

University Law College.

Mandal, Pramadabhushan.
M. Manzural Huq.
Rakshit, Bibhaschandra.
Sengupta, Sailendranath.
128 Bharali, Surendranath.
Bhattacharyya, Birendranath.
Bhattacharyya, Puranjay.
Datta, Phanindramohan.
Lahiri, Byomkes.
Majumdar, Bhabeschandra.
Ranajit Singh Nahar.

Earle Law College, Gauhati.

Sengupta, Surendramohan.

University Law College.

136 Bandyopadhyay, Birendranath.
Basu, Amarendranath.
Datta, Nirmalprasad.
Jana, Sudhirranjan.
Maitra, Bhabendranath.
Mukhopadhyay, Satyakinkar.

Ripon Law College.

Nath, Haricharan.

Ripon Law College.

143 Dasgupta, Santipriya.

University Law College.

Gan, Binaybhushan.

Ripon Law College.

Ghosh, Sripatiprasad.

University Law College.

Majumdar, Satindramohan.
Mitra, Ranendrakumar.

Ripon Law College.

Sengupta, Kedareswar.
149 Atiquar Rahman.

University Law College.

Bandyopadhyay, Sasankasekhar.
Bhattacharyya, Paresnath.
Das, Girindramohan.
Dhargupta, Aparnakumar.
Ghosh, Nayananjan.
Maitra, Sukumar.
Mitra, Bimalchandra.

Ripon Law College.

Mohammed Monawar.

University Law College.

Saha, Lalitkumar.

Non-collegiate student (Ripon Law College).

Sardar, Susilkumar.

University Law College.

160 Basu, Sukumar.

Non-collegaite student (Ripon Law College).

Goswami, Srischandra.

Ripon Law College.

Mahbubar Rahman.

University Law College.

Ray, Praphullakumar.
Sen, Bhabanicharan.
Sil, Prabhatkumar.
Syed Anwar Ahmed.

Ripon Law College.

167 Acharyya, Matilal.

University Law College.

Bandyopadhyay, Pabitrakumar.
Banik, Jaychandra.
Ghosh, Nareschandra.

Ripon Law College.

M. Kenaet Ali.

Non-collegiate student (University Law College).

P. S. Sastry.

University Law College.

173 Bandyopadhyay, Sudhirranjan.

Non-collegiate student (Ripon Law College).

Chaudhuri, Jibankrishna.

University Law College.

Das, Jnanendranath.
Dasgupta, Satyananda.
Datta, Balaichandra.

Ripon Law College.

Mamatazuddin Ahmed Khan.
Mohammad Mozaffar Ali.
Nuruddin Ahmed.

University Law College.

Raj Gobind Panday.
182 Basu, Abinaschandra.
Ghosh, Phanindrabhushan.

Ripon Law College.

Muhommed Phul Khan.

University Law College.

Mukhopadhyay, Haripada.

Ripon Law College.

Samanta, Sambhucharan.
Sen, Satyendrabihari.

University Law College.

188 Barua, Bidyakanta.
Bhattacharyya, Kanailal.

Ripon Law College.

Biswas, Suryyakanta.

University Law College.

Chakrabarti, Gunadaprasanna.
Ghosh, Manindralal.

Ripon Law College.

193 Debchaudhuri, Rameschandra.

University Law College.

194 Chattopadhyay, Khagendranath

Ripon Law College.

Dasgupta, Sukumar.

University Law College.

Pal, Bishnudas.

Ripon Law College.

197 Chaudhuri, Rameschandra.

University Law College.

Dasgupta, Jogendrachandra.
Majumdar, Nirmalkrishna.
Ray, Rabindranarayan.

Ripon Law College.

Shamsul Alam Mohammad Aflatun.

University Law College.

202 Bandyopadhyay, Sudhansusekhar.
Datta, Binaykrishna.
Datta, Sanatan.
Ghosh, Manmathakumar, I.
Majumdar, Himansubimal.

Ripon Law College.

Sarkar, Debidas.

University Law College.

Sarma, Kesarikanta.
209 Bagchi, Annadamohan.

Ripon Law College.

Bhunia, Satischandra.
Chakrabarti, Hemanganath.

University Law College.

Ghosh, Hemlal.
Sanyal, Amiyakumar, II.
" Dinabandhu.
215 Abdur Rahim Mia.

Ripon Law College.

Bhattacharyya, Priyanath.

University Law College.

Panday, Chandrashekhar.
Ray, Apurbagobinda.

Ripon Law College.

219 Bandyopadhyay, Dasarathi.

University Law College.

Bhattacharyya, Saileschandra.
Chaudhuri, Kshitischandra.
Das, Harakanta.
Datta, Bipinchandra.

Earle Law College, Gauhati.

Goswami, Sasikanta.

University Law College.

Hiranya Bahadur Bista.

Ripon Law College.

226 Azizul Haque.

University Law College.

Bardolai, Purnananda.

Earle Law College, Gauhati.

Deb, Jaminikanta.
Debsarma, Anantanath.

University Law College.

Ray, Diptischandra.

Ripon Law College.

Ray, Kamalkrishna.
Sarkar, Subodhchandra.

University Law College.

233 Bandyopadhyay, Sailendranath.
Ghosh, Bishnucharan.

Ripon Law College.

Hossainul Haider Choudhuri.

University Law College.

Mukhopadhyay, Kalicharan.
Ray, Kaliprasanna.
„ Susilkumar.

Ripon Law College.

239 Chattopadhyay, Purnananda.

University Law College.

Datta, Indubhushan.
Ghosh, Manmathakumar, II.

Ripon Law College.

Ray, Jaychandra.
243 Abdul Maleque.

Non-collegiate student (University Law College).

Basu, Sailendranath.

University Law College.

De, Arunansubhushan.
„ Durgadas.
Ghosh, Haricharan.

Ripon Law College.

Pal, Brajendranath.
249 Majumdar, Sailajaranjan.

University Law College.

Mitra, Gaurihar.

Ripon Law College.

Mukhopadhyay, Umeschandra.

Non-collegiate student (Ripon Law College).

Raychaudhuri, Dakshineswar.

University Law College.

253 Basu, Bankimbihari.

Ripon Law College.

Basu, Nisikanta.
Chaudhuri, Bijaysankar.

University Law College.

De, Praphullakumar.
Pramanik, Kartikchandra.

Non-collegiate student (University Law College).

258 Basu, Bimalkumar.

University Law College.

Basu, Prabhatranjan.

Non-collegiate student (University Law College).

Chakrabarti, Girijaprasanna.

University Law College.

Chakrabarti, Jyotischandra, II.

Earle Law College, Gauhati.

Das, Anandiram.

Ripon Law College.

Pal, Sukhendrachandra.

University Law College.

264 Bhaumik, Bhupendramohan.
Lakshmiprosad.
Sarmadhikari, Radharaman.
267 Datta, Pulinbihari.

Ripon Law College.

Md. Mahmud Ali Mallik.

Earle Law College, Gauhati.

Saraswati, Atulchandra.

University Law College.

Sengupta, Manindramohan.
271 Bhattacharyya, Jogendranath.

Ripon Law College.

Das, Pranchaitanya.

University Law College.

Chaudhuri, Asutoshnarayan.
„ Jyotiprasad.
Gangopadhyay, Gangapada.
Lahiri, Atulchandra.

Ripon Law College.

Madhu, Jaladhar.
Mitra, Sanatkumar.

University Law College.

Mukhopadhyay, Sunilkrishna.
280 Das, Sudhirnarayan.
Lahiri, Akhilkanta.
Shaikh Golam Mohiuddin.

Non-collegiate student (University Law College).

283 Bhattacharyya, Haraprasanna.

University Law College.

Chattopadhyay, Umaprasad.
Das, Ratneswar.

Ripon Law College.

Majumdar, Phanindrachandra.

University Law College.

Mitra, Gobindachandra.
Saha, Aswinikumar.

Ripon Law College.

289 Basu, Manindranath.

University Law College.

Deonand Singh.
Guha, Sudhirchandra.
Gupta, Anadiranjan.

Earle Law College, Gauhati.

Kakati, Sonaram.

University Law College.

Mahiruddin Pramanik.

Ripon Law College.

Md. Abdur Rahman.

University Law College.

Mukhopadhyay, Kanailal.
Pakrasi, Prakaschandra.

Ripon Law College.

Palchaudhuri, Kiranchandra.
Sohanabis, Lakshmiprasad.

N. SEN,
Controller of Examinations.

Survey Education Advisory Board.

Calcutta, the 9th September 1931.

Names of candidates successful at the Amin Examination held in 1931.

(Arranged in order of merit.)

FIRST DIVISION.

Bengal Survey School, Mainamati.

Shyamapada Mukhuti.

D. J. Industrial School, Rajshahi.

Phanindra Mohan Roy Ghatak.

Bengal Survey School, Mainamati.

Krishnadas Saha.
Narendra Mohan Bandyopadhyaya.
Brindaban Choudhury.
Raghunath Chakrabarty.

B. G. Technical School, Rangpur.

Basanta Kumar Acharjee.

Bengal Survey School, Mainamati.

Satya Saran Sarkhel.

D. J. Industrial School, Rajshahi.

Harish Chandra Saha.

B. G. Technical School, Rangpur.

Gobinda Chandra Biswas.

Bengal Survey School, Mainamati.

Dwijendra Lal Chakrabarty.

District Board Technical School, Burdwan.

Birendra Kumar Dey.

Jagat Bandhu Goswami.
D. J. Industrial School, Rajshahi.
Ram Chandra Talukdar.

E. B. Technical School, Pabna.

Jagadananda Bhadra.

Bengal Survey School, Mainamati.

Bejoy Krishna Ghosh.

B. G. Technical School, Rangpur.

Rakhal Das Bose.

Bengal Survey School, Mainamati.

Kalipada Bose.
Amulyaratan Gangopadhyay.

SECOND DIVISION.

D. J. Industrial School, Rajshahi.

Sailendra Narayan Mitra.

B. G. Technical School, Rangpur.

Sheikh Ghoffur Bakhsh.

District Board Technical School, Burdwan.

Bimalendu Gupta Sarma.
Tarapada Halder.

Bengal Survey School, Mainamati.

Surendra Nath Hazra.
Sushil Chandra Ghosh.

District Board Technical School, Burdwan.

Purnendu Bhusan Mitra.

B. G. Technical School, Rangpur.

Bhupendra Nath Chakrabarty.
Bengal Survey School, Mainamati.
Arabinda Saha.

District Board Technical School, Burdwan.

Satya Ranjan Guha.

E. B. Technical School, Pabna.

Mrinal Kanti Mazumdar.

B. G. Technical School, Rangpur.

Ramesh Chandra Chakrabarty.

Bengal Survey School, Mainamati.

Zahural Hoque.

District Board Technical School, Burdwan.

Surendra Kumar Chakrabarty.

Bengal Survey School, Mainamati.

Birendra Kumar Bhattacharyya.
Sudhindra Mohan Chatterjee.
Abdul Quader.

B. G. Technical School, Rangpur.

Jatindra Chandra Datta.

E. B. Technical School, Pabna.

Birinchi Lal Karmaker.

Bengal Survey School, Mainamati.

Barindra Kumar Goswami.
Sreedhar Chakrabarty.
Badsha Mea.
Kiran Chandra Majumdar.
D. J. Industrial School, Rajshahi.
Adhir Chandra Talapatra.

Bengal Survey School, Mainamati.

Suchitra Kumar Bose.
Abdul Aziz Meah.

District Board Technical School, Burdwan.

Sudhamoy Bhattacharjee.

Bengal Survey School, Mainamati.

Chinta Haran Sarker.
Sarada Kanta Biswas.
Ramesh Chandra Bandyopadhyaya.

B G. Technical School, Rangpur.

Narendra Nath Acharjee.
D. J. Industrial School, Rajshahi.
Bankim Chandra Mandal.

B. G. Technical School, Rangpur.

Sudhir Chandra Bose.

Bengal Survey School, Mainamati.

Dharani Kanta Das Gupta.
Manindra Chandra Bhattacharyya.
Phanindra Bhusan Datta Gupta.

THIRD DIVISION.

Bengal Survey School, Mainamati.

Animesh Chandra Sinha Roy.

E. B. Technical School, Pabna.

Susil Kumar Pramanick.

B. G. Technical School, Rangpur.

Debabrata Das Gupta.

D. J. Industrial School, Rajshahi.

Joy Gopal Ganguly.

Bengal Survey School, Mainamati.

Sachindra Kumar Das.

B. G. Technical School, Rangpur.

Md. Abul Kasem Kadria.

Bengal Survey School, Mainamati.

Shyamlal Mukhopadhyaya.

District Board Technical School, Burdwan.

Rajendra Lal Ghatak.

E. B. Technical School, Pabna.

Phani Bhushan Biswas.

District Board Technical School, Burdwan.

Ratneswar Mukherjee.

B. G. Technical School, Rangpur.

Sachindra Nath Sarker.

Bengal Survey School, Mainamati.

Tarani Mohan Choudhury.
Prasanna Kumar Das.
Raj Nripendra Narayan Choudhury.

B. G. Technical School, Rangpur.

Himansu Bimal Sen.

Bengal Survey School, Mainamati.

Amulya Kumar Das.
Torabuddin Ahmed.

E. B. Technical School, Pabna.

Rati Ranjan Mazumdar.

Bengal Survey School, Mainamati.

Santiranjan Chakrabarty.
Nani Bhusan Sarker.

B. G. Technical School, Rangpur.

Ashutosh Bose.

Bengal Survey School, Mainamati.

Abdul Hamid.

D. J. Industrial School, Rajshahi.

Nur Mahammad Mondal.

District Board Technical School, Burdwan.

Bibhuti Bhusan Roy.

E. B. Technical School, Pabna.

Kamakhyadas Chowdhury.

B. G. Technical School, Rangpur.

Chittaranjan Ghosh.

Bengal Survey School, Mainamati.

Lalit Ranjan Dutta Gupta.

B. G. Technical School, Rangpur.

Jagadish Chandra Dutt.
Pradyot Kumar Ray Choudhury.

Prafulla Chandra Das Gupta.

Bengal Survey School, Mainamati.

Sailesh Chandra Datta Gupta.

B. G. Technical School, Rangpur.

Jagadindra Chandra Chowdhury.
Parimal Chandra Dey.
Jogesh Chandra Ghosh.

Bengal Survey School, Mainamati.

Ramesh Chandra Sarker.

ADINATH SEN,
Secretary, Survey Education Advisory Board.

Board of Intermediate and Secondary Education, Dacca.

Ramna, the 2nd September 1931.

NOTIFICATION.

Special Scholarship of Rs. 10 a month for backward classes, 1931.

No. 4431.—The student named below is awarded the above scholarship on the results of the High School Examination, 1931, conducted by the Board of Intermediate and Secondary Education, Dacca. The scholarship takes effect from the 1st June 1931, and is tenable for two years at the Jagannath Intermediate College, Dacca:—

Pogose School.
Sajubkumar Das.

A. RAHMAN, *Secretary.*

Department of Industries, Bengal.

NOTIFICATION.

Calcutta, the 3rd September 1931.

It is hereby notified for general information that Babu Suresh Chandra Datta, Subdivisional Officer, Public Works Department, has been appointed a member of the Managing Committee of the Elliott Bonamali Technical School, Pabna, constituted under Government order No. 18T.A.I., dated the 12th April 1923, *vice* Babu Mathura Kanta Nandi, Head Master, Pabna Zilla School (a nominated member), transferred.

A. T. WESTON,
Director of Industries, Bengal.

NOTICE.

Calcutta, the 12th September 1931.

The following programme for the ensuing Divisional Accountants' Examination to be held at the Bengal Engineering College, Sibpur, in January 1932, is published for general information :—

Monday, 11th January 1932—

11 a.m.—Writing and Dictation.
12 to 4 p.m.—Book-keeping.

Tuesday, 12th January 1932—

11 a.m. to 12 noon—Essay writing.
1 p.m. to 5 p.m.—Arithmetic.

Wednesday, 13th January 1932—

11 a.m. to 1 p.m.—Geometry.
2 p.m. to 4 p.m.—Mensuration.

Applications from the intending candidates will be received by the undersigned up to 12 noon of the 15th November 1931. They should be accompanied by the necessary certificates and fees as prescribed in the rules.

A. C. DAS,
for *Deputy Accountant-General, Bengal.*

University of Dacca.

Ramna, Dacca, the 31st August 1931.

(Approved by the Executive Council of the University of Dacca, dated the 9th September 1931.)

(The order of subjects given in the time-table is liable to changes in detail.)

Time-table for the B.A., B.Sc., B. Com. and the B.T. and L.T. Examinations, 1932.

B.A. and B. Sc. Pass and Subsidiary Examinations, 1932.

1932.

Tuesday,	February	23	..	10 a. m. to 1 p. m. English, Paper I. 2 p. m. to 5 p. m. English, Paper II.
Wednesday	,,	24	..	10 a. m. to 1 p. m. English, Paper III. 2. p. m. to 5 p. m. Economics, Paper I.
Thursday	,,	25	..	10 a. m. to 1 p. m. Economics, Paper II. 2 p. m. to 5 p. m. Economics, Paper III.
Saturday	,,	27	..	10 a. m. to 1 p. m. (i) Vernacular. (ii) Physics, Paper I. 2 p. m. to 5 p. m. (i) History, Paper I. (ii) Physics, Paper II.
Monday	,,	29	..	10 a. m. to 1 p. m. (i) History, Paper II. (ii) Chemistry, Paper I. 2 p. m. to 5 p. m. (i) History, Paper III. (ii) Chemistry, Paper II.
Tuesday,	March	1	..	10 a. m. to 1 p. m. Mathematics, Paper I. 2 p. m. to 5 p. m. Mathematics, Paper II.
Wednesday	,,	2	..	10 a. m. to 1 p. m. Mathematics, Paper III. 2 p. m. to 5 p. m. (i) Politics, Paper I. (ii) Classics, Paper I.
Thursday	,,	3	..	10 a. m. to 1 p. m. (i) Politics, Paper II. (ii) Classics, Paper II. 2 p. m. to 5 p. m. (i) Politics, Paper III. (ii) Classics, Paper III.
Monday	,,	7	..	10 a. m. to 1 p. m. Philosophy, Paper I. 2 p. m. to 5 p. m. Philosophy, Paper II.
Tuesday	,,	8	..	10 a. m. to 1 p. m. Philosophy, Paper III.

B.A. Honours Examinations, 1932 (including B.Sc. Honours Examination in Mathematics).

Time 10-30 a. m. to 2-30 p. m.

1932.

Wednesday,	March	9	..	Paper I and Sanskrit and Bengali Honours, Paper I.
Thursday	,,	10	..	Paper II and Sanskrit and Bengali Honours, Paper II.
Saturday	,,	12	..	Paper III.
Monday	,,	14	..	Paper IV and Sanskrit and Bengali Honours, Paper III. (Same as Sanskritic Studies Honours, Paper IV.)
Tuesday	,,	15	..	Paper V and Sanskrit and Bengali Honours, Paper IV.
Wednesday	,,	16	..	Paper VI and Sanskrit and Bengali Honours, Paper V.
Thursday	,,	17	..	Paper VII and Sanskrit and Bengali Honours, Paper VI.
Saturday	,,	19	..	Paper VIII and Sanskrit and Bengali Honours, Paper VII.
Monday	,,	21	..	Sanskrit and Bengali Honours, Paper VIII.

B. Sc. Honours Examinations, 1932 (excluding B. Sc. Honours Examination in Mathematics).

Time 10-30 a. m. to 2-30 p. m.

1932.

Wednesday,	March	9	..	Physics, Paper I. Chemistry, Paper I.
Thursday	,,	10	..	Physics, Paper II. Chemistry, Paper II.
Saturday	,,	12	..	Physics, Paper III. Chemistry, Paper III.
Monday	,,	14	..	Physics, Paper IV. Chemistry, Paper IV.
Tuesday	,,	15	..	Physics, Paper V.

B. Com. Examination, 1932.

Time 10-30 a. m. to 1-30 p. m.

1932.

Wednesday,	March	9	..	Elements of Economics.
Thursday	,,	10	..	Economic Geography.
Saturday	,,	12	..	Business Organisation (including Commercial Correspondence).
Monday	,,	14	..	Trade and Transport.
Tuesday	,,	15	..	Mercantile Law, Paper I.
Wednesday	,,	16	..	Mercantile Law, Paper II.
Thursday	,,	17	..	(i) Banking and Currency. (ii) Accountancy Paper for candidates for the B.A. Ordinary Degree Examination, who have taken up Commerce subjects.

Time 10-30 a. m. to 2-30 p. m.

1932.

Saturday,	March	19	..	Advanced Accounts, Paper I.
Monday	,,	21	..	Advanced Accounts, Paper II.
Thursday	,,	24	..	Advanced Accounts, Paper III.

B. Sc. Pass and Honours Practical Examinations, 1932.

(i) The Practical Examinations in Physics and Chemistry will be held after the Theoretical Examinations in those subjects are over.

(ii) Candidates for the B.Sc. Pass and Honours Examinations must ascertain from the heads of the departments of Physics and Chemistry the exact date and time of their Practical Examination.

B.A. Honours, Viva voce and Practical Examinations, 1932.

(i) Candidates for the B.A. Honours Examinations must ascertain from the heads of the departments concerned the exact date and time of their Viva Voce Examinations.

(ii) Candidates for the B.A. Honours Examination in Philosophy must ascertain from the head of the department of Philosophy the exact date and time of their Practical Examination.

B. T. and L. T. Examinations, 1932.

1932.

Tuesday,	March	1	..	Moderation of Class Records in Practical Teaching.
Wednesday	,,	2	..	
Thursday	,,	3	..	
Friday	,,	4	..	

Time 8 a.m. to 11 a.m.

1932.

Monday,	March	14	..	Educational Psychology.
Tuesday	,,	15	..	Principles of Teaching.
Wednesday	,,	16	..	Special subjects (Method of Teaching in special subjects).

Time 8 a.m. to 10 a.m.

1932.

Thursday,	March	17	..	Educational Measurements (Ordinary Course).
Saturday	,,	19	..	Physical Life.
Monday	,,	21	..	Educational Measurements (Special Proficiency Course).
Monday	April	4	..	Viva Voce.

N. AHMAD, *Registrar.*

Orders by the Syndicate of the Calcutta University.

NOTIFICATION No. T. 285.

Senate House, the 29th August 1931.

The following portions from the Bible Selections, Part III (published by the University), are prescribed to be read in English for the B.A. Examination in 1933:—

The Book of Job (pages 31-87).
The Book of Psalms (pages 88-167).

NOTIFICATION No. T. 286.

Senate House, the 11th September 1931.

It is notified for general information that alternative questions from Collin's Odyssey will be set *for* Macaulay's History of England, Chapter III, at the I.A. and I.Sc. Examinations in 1932.

A. N. MUKHERJEE, *Registrar.*

Orders by the Vice-Chancellor and Syndicate of the Calcutta University.

ADDENDUM.

Senate House, the 7th September 1931.

In addition to the candidates who have been declared as having passed the Matriculation Examination, 1931, as announced in the *Calcutta Gazette*, dated the 25th June 1931, the following candidate is also declared to have passed the Matriculation Examination, 1931 :—

Roll No.	Name.	Age.	Division.
Cal. 3107	Atulchandra Sardar ..	16-3	Third.

N. SEN,

Controller of Examinations.

The Calcutta Gazette

THURSDAY, SEPTEMBER 17, 1931.

Part II

Advertisements.

Notices.

Advertisements, Notices, etc., intended for insertion in this Part of the Gazette cannot be received after noon of Saturday.

IMPERIAL BANK OF INDIA.

Statement of the affairs of the Imperial Bank of India on the 4th September 1931.

LIABILITIES.

	Rs.	A.	P.
Subscribed Capital ..	11,25,00,000	0	0
Capital paid up ..	5,62,50,000	0	0
Reserve ..	5,42,50,000	0	0
Public Deposits ..	16,04,12,000	0	0
Other Deposits ..	64,69,38,000	0	0
Loans against securities per contra ..	....		
Loans from the Government of India under section 20 of the Paper Currency Act, against Inland bills discounted and purchased per contra ..	....		
Contingent liabilities ..	....		
Sundries ..	1,25,37,000	0	0
	93,03,87,000	0	0

ASSETS.

	Rs.	A.	P.
Government Securities ..	29,66,18,000	0	0
Other authorized securities under the Act ..	2,76,77,000	0	0
Ways and Means Advances to the Government of India ..	....		
Loans ..	9,97,02,000	0	0
Cash Credits ..	26,63,27,000	0	0
Inland bills discounted and purchased ..	2,40,54,000	0	0
Foreign bills discounted and purchased ..	43,57,000	0	0
Bullion ..	....		
Dead stock ..	2,72,97,000	0	0
Liability of constituents for contingent liabilities per contra ..	....		
Sundries ..	46,60,000	0	0
Balances with other Banks ..	2,71,000	0	0
	75,09,63,000	0	0
Cash ..	17,94,24,000	0	0
	93,03,87,000	0	0

The above balance sheet includes :—

	£
Deposits in London ..	861,400
Advances and Investments in London ..	869,700
Cash and balances at other Banks in London ..	22,800

Percentage 21·88.

Bank rate 7 per cent.

OSBORNE A. SMITH,
K. M. MACDONALD,
Managing Governors.

(1988—1)

LAND SALE NOTICES.

Notification A.

NOTICE is hereby given, under sections 6 and 13, Act XI of 1859, that the undermentioned estates and shares of estates in the district of Midnapore will be put up for sale at the office of the Collector of that district on the 26th September 1931, at 12 noon, for arrears of revenue of which the latest date of payment was 29th June 1931, and other demands, which by law are realizable as arrears of land revenue.

When in columns 5, 7 and 9 of the following statement it is stated that only a share is to be sold, it is to be understood that a separate account is kept for that share :—

Tauzi No.	Name of mahal and pargana.	Sadar jama of whole estate.	Whether the whole estate is to be sold.	If only a share is to be sold, specification of such share or shares.	Names of proprietors of property to be sold.	If only a share is to be sold, sadar jama of such share.	If the whole estate is to be sold, the arrears due from it.	If only a share is to be sold, the arrears due from it.
1	2	3	4	5	6	7	8	9
		Rs. A. P.				Rs. A. P.	Rs. A. P.	Rs. A. P.
216	Singurai, pargana Boraichore.	1,280 5 11	..	Residuary share—12 annas in each of mauzas Bhatia, Jagannathchak, Narayanchak, Jagatramchak *alias* Jagatrailbarh, Mukundachak *alias* Mukundaharichak, Kasichak *alias* Kasidirichak; 16 annas of mauzas Ichanagari and Kalusenapatichak; 7 annas share in mauzas Kuchai, Lakhanchak and Pakhinagari; and 10 annas of mauza Baraki will be sold. All other shares than that specified will be excluded from sale.	Bamacharan Giri and others.	777 13 5	..	57 1 5
276	Bhitorebinode 4 annas share, pargana Toppabalisita.	1,658 14 10	..	Separate account No. 1— 8 annas share of mahal will be sold. All other shares than that specified will be excluded from sale.	Ratnakar Das ..	829 7 5	..	50 2 5
327	Dihi Baranga *alias* De Baranga, etc., pargana Birkul.	3,195 3 8	..	Residuary share— The following shares of the following mauzas will be sold :— 5 a. 15 gd. of mauza Arjuni, 4 a. 12 gd. 2 c. of mauza Akbarpur, 4 annas of mauza Barabatia, 4 annas of mauza Damodarpur, 7 a. 11 gd. 5 kag 13 gd. 1 c. 1 kt. of mauza Baranga, 2 a. 10 gd. of mauza Barangabheri, 11 a. 5 gd. of mauza Bhagirathpur, 3 a. 5 gd. 2 kag 16 til 1 c. of mauza Chandia, 12 a. 10 gd. of mauza Deulbatta, 16 annas of mauza Fatepur, 10 a. 13 gd. 1c. 1kt. of mauza Gobindapur, 4 annas of mauza Ghulichak, 12 a. 3 c. 10 til of mauza Jharpadima, 11 a. 5 gd. of mauza Kabara, 10 a. 13 gd. 1c. 1kt. of mauza Kulbudhi, 12 a. 10 gd. of mauza Hariharpur, 11 a. 6 gd. 2c. 2kt. of mauza Rania, 4 a. 9 gd. 3c. 3 kag 10 til of mauza Akua, 5 a. 8 gd. 1 c. 1 kt. of mauza Bagmari. All other shares than that specified will be excluded from sale.	Pulin Behary Chaudhury and others.	1,289 8 5	..	107 11 8
374	Bhagabanpur *alias* Barh-Bhagalsanpur, pargana Bhuiamutha.	1,010 9 5	..	Separate account No. 1— 8 annas share of each of the mauzas Bartanya, Bartanbarh, Binodechak, Bhagabanpurbarh, Saunia and Jogubarh will be sold. All other shares than that specified will be excluded from sale.	Bisseswar Das, self, brother and guardian of Amrit Lal Das, minor and another.	505 4 9	..	55 0 10

Tauzi No.	Name of mahal and pargana.	Sadar jama of whole estate.	Whether the whole estate is to be sold.	If only a share is to be sold, specification of such share or shares.	Names of proprietors of property to be sold.	If only a share is to be sold, the sadar jama of such share.	If the whole estate is to be sold, the arrears due from it.	If only a share is to be sold, the arrears due from it.
1	2	3	4	5	6	7	8	9
		Rs. A. P.				Rs. A. P.	Rs. A. P.	Rs. A. P.
478	Kuldaha, pargana Chandrakona.	10,784 7 2	..	Separate account No. 3— 2 a. 13 gd. 1 c. 1 kt. share of the mahal will be sold. All other shares than that specified will be excluded from sale.	Sailaja Nath Roy Chowdhury and others.	1,797 6 6	..	2,649 14 7
970	Kishorechak, pargana Kasijora.	606 5 4	Entire ..	....	Bhupati Charan Jana and another.	..	66 2 0	..
2246	Mohar, pargana Sabang.	1,302 1 0	Do. ..	....	Adyaita Charan Maity and others.	..	584 10 0	..
2388	Seulipur, pargana Sabang.	861 13 4	..	Residuary share— 16 as. share of mauzas Binandachak, Bhatbarh, Kerurbarh, Langalkata, Monoharpur, Monoharpur-Khalpar, Gotgerya, Ghasichak, Kakdahara, Kajichak, Salmara-chhoto, Salmara-bara, Seulipur, Gopalbarh, Sadulyapur, Bhanjapur, Markandachak, Birbhanupur-Paschim Chalukuri, Durgaprosadchak, Gopa'chak, Narayanbarh, Pakurachak, Raghunathchak, Sallabheri and 4a. 10gd. share of mauza Kalyanpur and Raipur will be sold. All other shares than that specified will be excluded from sale.	Chintamoni Maity and others.	726 12 9	..	8 13 0
2376	Baragarh, pargana Sahapur.	3,196 12 4 including police.	..	Residuary share— 10 annas share of each of the mauzas Baragarh, Debra-kismat and Ramgerya will be sold. All other shares than that specified will be excluded from sale.	Muchiram Maity and others.	1,035 2 4 including police.	..	2 14 3

Midnapore, the 2nd September 1931.

[ILLEGIBLE], *for* Collector.

Notification A.

NOTICE is hereby given, under sections 6 and 13, Act XI of 1859, that the undermentioned estate and shares of estate in the district of Nadia will be put up for sale at the office of the Collector of that district on the 25th September 1931, at 12 noon, for arrears of revenue and other demands which by law are realizable as arrears of Land Revenue :—

Tauzi No.	Name of mahal and pargana.	Sadar jama of whole estate.	Whether the whole estate is to be sold.	If only a share is to be sold, specification of such share or shares.	Names of proprietors of property to be sold.	If only a share is to be sold, the sadar jama of such share.	If the whole estate is to be sold, the arrears due from it.	If only a share is to be sold, the arrears due from it.
1	2	3	4	5	6	7	8	9
		Rs. A. P.					Rs. A. P.	
491	Sadipur, pargana Rajpur.	18,263 14 9	Whole ..	....	Bhujendra Nath Biswas and others.	..	40 4 0	..

Krishnagar, the 2nd September 1931.

A. BANERJI, *for* Collector.

Notification A.

NOTICE is hereby given, under sections 6 and 13, Act XI of 1859, that the undermentioned estates and shares of estates in the district of 24-Parganas will be put up for sale at the office of the Collector of that district on the 23rd September 1931, at 12 noon, for arrears of revenue and other demands which by law are realizable as arrears of land revenue.

When in columns 5, 7 and 9 of the following statement it is stated that only a share is to be sold, it is to be understood that a separate account is kept for that share :—

Touzi No.	Name of mahal and pargana.	Sadar jama of whole estate.	Whether the whole estate is to be sold.	If only a share is to be sold, specification of such share or shares.	Names of proprietors of property to be sold.	If only a share is to be sold, the sadar jama of such share.	If the whole estate is to be sold, the arrears due from it.	If only a share is to be sold, the arrears due from it.
1	2	3	4	5	6	7	8	9
		Rs. A. P.				Rs. A. P.	Rs. A. P.	Rs. A. P.
6 R.S.	Mahal Raynagore, pargana Magura.	..	..	16 annas share in all mauzas except in mauzas Palpara and Jafarpore.	Akhay Chandra Bose.	6,800 3 6	..	1,053 2 4½
36	Mahal Dhapanunpore, pargana Calcutta.	731 12 0	Whole ..	....	Joy Narayan Chandra and others.	..	28 1 2	..
63 R.S.	Mahal Bansdroni, pargana Magura.	..	..	9as. 13 gds. 4 kag 10 til share of the entire estate.	Satyendra Kumar Sirkar and others.	5,474 15 7	..	266 4 5½
63-1	Ditto ..	..	..	6as. 6gds. 11 kag 10 til share.	Ditto ..	3,588 8 5	..	175 6 4½
107 R. S.	Mahal Akulshi, pargana Magura.	..	..	16 annas share of the entire estate except mauzas Nona and Babanpore.	Abhoy Kumar Ray Choudhury.	622 0 8	..	79 15 1
146 R. S.	Mahal Jajra, pargana Anarpore.	..	..	16 annas share of 185 mauzas of the entire estate.	Dharani Mohan Ray.	26,207 1 9	..	1,088 13 4½
165	Mahal Rajarampore, pargana Hatiaghar.	599 10 4	Whole ..	....	Satyendra Kumar Sircar and others.	..	43 14 3½	..
273 R. S.	Mahal Dudial, pargana Medanmolla.	..	..	8 annas share of the entire estate.	Amode Nath Dutta and others.	510 9 5½	..	58 5 1½
281	Mahal Kandarpapur, pargana Medanmolla.	593 10 4	Whole ..	....	Banbehari Chatterjee and others.	..	252 4 10	..
411	Mahal Dhanyakhola, pargana Magura.	2,503 4 0	Do. ..	....	Gopal Lal Banerji and others.	..	110 10 0	..
603-6	Mahal Balia, pargana Balia.	..	..	....	Sailajanath Ray Chaudhury and others.	..	1,631 12 4	..
1064-1	Mahal Kharbil Nalua, pargana Hatiaghar.	..	..	5 as. 6 gds. 2 k. 2 kr. share of the entire estate.	Dhirendradeb Ray and others.	1,088 3 3	..	128 15 9
1503-1	Mahal Hasanpore, pargana Hatiaghar.	..	..	5 as. 6 g. 2 k. 2 kr. share of the entire estate.	Ditto ..	2,360 3 5	..	369 5 3
1329	Lot No. 65, pargana Sunderbans.	6,191 0 0	Whole ..	....	Port Canning and Land Improvement Co., Ltd	..	773 13 3	..
1386-2	Lot No. 74, pargana Sunderbans.	..	..	2 as. 16 g. 1 k. 1⅓ danti ..	Peary Lal Ghosh and others.	552 1 0	..	34 8 0
1387-2	Lot No. 76, pargana Sunderbans.	..	..	2 as. 16 g. 1 k. 1⅓ danti ..	Ditto ..	739 1 1	..	46 8 0
1457 R. S.	Lot No. 90, pargana Sunderbans.	..	..	11 as. 12 gds. 10 kag 19⅓ til share of the entire estate.	Bepin Behary Sarkar and others.	6,105 2 0	..	383 14 0
2687	Lot No. 11, eastern part, pargana Sunderbans.	3,579 0 0	Whole ..	....	Ram Gopal Das Naskar and others.	..	2,573 0 0	..
2688	Lot No. 11, middle part, pargana Sunderbans.	4,792 0 0	Do. ..	....	Ditto ..	..	3,545 0 0	..
2712	Lot No. 67, south-eastern part, pargana Sunderbans.	4,586 0 0	Do. ..	....	Ananta Deb Sirkar and others.	..	287 0 0	..
2714	Lot No. 11, western part, pargana Sunderbans.	4,420 0 0	Do. ..	....	Ram Gopal Das Naskar and others.	..	3,236 0 0	..
2721-1	Lot No. 16, north-western part, pargana Sunderbans.	..	..	8 annas share of the entire estate.	Annada Prosad Mitra.	2,339 8 0	..	146 0 0

Tauzi No.	Name of mahal and pargana.	Sadar jama of whole estate.	Whether the whole estate is to be sold.	If only a share is to be sold, specification of such share or shares.	Names of proprietors of property to be sold.	If only a share is to be sold, the sadar jama of such share.	If the whole estate is to be sold, the arrears due from it.	If only a share is to be sold, the arrears due from it.
1	2	3	4	5	6	7	8	9
		Rs. A. P.				Rs. A. P.	Rs. A. P.	Rs. A. P.
2731	Lot No. 138, western part, pargana Sunderbans.	5,954 0 0	Whole ..	....	Sudl Kumar Ray Chaudhury.	..	2,726 0 0	..
2823	1st portion of lot No. 111, pargana Sunderbans.	5,241 0 0	Do. ..	....	Pran Krishna Samanta and others.	..	1,965 0 0	..
2853	Lot No 128, 1st portion, pargana Sunderbans.	1,125 0 0	Do. ..	....	Dwarika Nath Chakravarty.	..	210 0 0	..
2895	I plot, 9th portion, pargana Sunderbans.	810 0 0	Do. ..	....	Sm. Nistarini Dasi and others.	..	404 15 0	..
2898	I plot, 1st portion, pargana Sunderbans.	979 0 0	Do. ..	....	Ram Gopal Das Nasker.	..	98 0 0	..
2906	Lot No. 122, 2nd portion, pargana Sunderbans.	783 0 0	Do. ..	....	Chandi Charan Laha.	..	157 0 0	..
2923	Lot No. 127, pargana Sunderbans.	3,087 0 0	Do. ..	....	Nafar Chandra Pal Chaudhury.	..	2,342 0 0	..
2924	Lot No. 128, south portion, pargana Sunderbans.	4,576 0 0	Do. ..	....	Ditto ..	..	2,288 0 0	..
2925	E plot, 1st portion, pargana Sunderbans.	1,094 0 0	Do. ..	....	Bhupendra Nath Jana and others.	..	219 0 0	..
2927 R.S.	F plot, 2nd portion, pargana Sunderbans.	..	..	8 annas share of the entire estate.	Satish Chandra Dinda and others.	529 0 0	..	100 0 0
2977	Lot No. 117, 2nd portion, pargana Sunderbans.	943 0 0	Whole ..	....	Chandi Charan Laha.	..	188 0 0	..
2981	Lot No. 139, 4th portion, pargana Sunderbans.	1,105 0 0	Do. ..	....	Hrishikesh Mitra	..	221 0 0	..
2987	Lot No. 150, 1st portion, pargana Sunderbans.	939 0 0	Do. ..	....	Krishna Prasad Ghosh and others.	..	188 0 0	..
2991	Lot No. 150, 3rd portion, pargana Sunderbans.	1,166 0 0	Do. ..	....	Dhirendra Nath Dey.	..	233 0 0	..
2993	Lot No. 162, 1st portion, pargana Sunderbans.	1,285 0 0	Do ..	....	Manindra Nath Bhaduri.	..	885 0 0	..
3014	Lot No. 150, 2nd portion, pargana Sunderbans.	1,040 0 0	Do. ..	....	Sm. Susila Sundari Bose.	..	208 0 0	..
3017	Lot No. 162, 2nd portion, pargana Sunderbans.	1,143 0 0	Do. ..	....	Bhaba Nath Chakraverty and others.	..	19 12 0	..
3162	Mahal Ramchandrapore, pargana Balia.	1,440 0 0	Do. ..	....	Chandi Charan Laha and others.	..	1,196 0 0	..

Alipore, the 5th September 1931.

P. GHOSE, *for* Collector.

THE COMMISSIONERS FOR THE PORT OF CALCUTTA.

Notice of sale under sections 118 and 119 of the Calcutta Port Act, III of 1890 (B. C.).

NOTICE is hereby given that the liability of the Commissioners for the undermentioned goods consigned to order *ex* the undermentioned vessels has in terms of section 113 of the abovementioned Act ceased on the expiration of three clear days from the date of landing. These goods accordingly remain on the Port Commissioners' premises at the sole risk and expense of the owners and if not cleared on or before the 2nd October 1931 on payment of all charges due will be sold by public auction :—

Date of landing.	Marks and numbers.	Quantity.	Description.
1931.			
6th April ..	R G S in a Block, " City of Baroda "	1	Case advertisements.
17th April ..	D C 3933/35, " City of Lahore "	3	Cases merchandise.
24th April ..	Hossein upon 1499 in a diamond, A M on top, A Co. below, " City of Lahore."	1	Bundle shovels.
28th April ..	M & Co in a diamond, " Governor "	1	Cask plaster.
6th May ..	C-53 in a diamond, D on top, S 27398 below 774, " City of Christ Church."	1	Case advertising matters.
19th June ..	G O P, " Barjora "	45	Cases butter.
26th June ..	V M 1/8 Victor Molino, " Novara "	8	Cases wine (W. G.).
1st July ..	G C S & Co 02, " Recorder "	1	Case publicity.
15th April ..	Diwan, " Goalpara "	1	Bag green gram.
21st April ..	Birla Bros, " Talamba "	1	Case sardines.
23rd April ..	No mark, " Burma Maru "	..	A quantity of bolts and nuts weighing about 14 lbs.
18th May ..	13678 in a triangle, " Takliwa "	50	Cases brandy (W. G.).
29th May ..	No mark, " Nagato Maru "	1	Piece rubber shoe.
29th May ..	No mark, " Nagato Maru "	1	Piece tricycle wheel.
29th May ..	G S upon M in a heart, D on top, " Nagato Maru " ..	3	Bags merchandise.
1st June ..	S L & Co upon 1877 in a block, " Lepanto " ..	1	Case merchandise (W. G.).
26th June ..	A S upon 123, " Makalla "	8	Bundles tea shooks.
3rd July ..	L S D upon 185 in a diamond, H C on top, B C below, " Marine Sanado."	13	Bales newsprinting paper.
9th July ..	G S upon M in a heart, D on top, " Hamburg Maru " ..	5	Empty bags.
19th June ..	G S upon M in a heart, D on top, " Bengal Maru "	1	Bag merchandise.
19th June ..	G S upon M in a heart, D on top, " Bengal Maru "	1	Paper bag merchandise.
14th July ..	Y T C in a diamond, " Yuensang "	1	Case merchandise.
13th July ..	No mark, " Yuensang "	1	Package crucible (broken).
22nd July ..	No mark, " Burma Maru "	7	Pieces coloured cloth.
22nd July ..	No mark, " Burma Maru "	2	Thans cloth.
22nd July ..	No mark, " Burma Maru "	2	Pairs rubber shoes.
22nd July ..	G D upon M in a heart, S on top, " Burma Maru "	3	Bags cement.
22nd July ..	No mark, " Burma Maru "	1	Bag cement.
22nd July ..	N S K in a diamond, S & on top, Co below, " Burma Maru."	1	Bag cement.
22nd July ..	No mark, " Burma Maru "	7	Bags cement sweepings.
22nd July ..	No mark, " Burma Maru "	..	A quantity of empty torn bags weighing about 10 lbs.
8th April ..	No mark, " Hakodate Maru "	2	Pieces undershirts.
4th April ..	Sikri upon 3735 in a diamond 31, " Hakodate Maru "	1	Case merchandise.
8th April ..	No mark, " Hakodate Maru "	25	Bags cement.

Date of landing.	Marks and numbers.	Quantity.	Description.
1931			
10th April ..	A in a diamond, B M on top 3, " Tilawa " ..	1	Case sample of art silk.
6th May ..	K. S., " Muroran Maru "	1	Package rubber shoes.
7th May ..	No mark, " Muroran Maru "	7	Bags merchandise.
4th May ..	U I N " Cortellazzo "	1	Bag merchandise (H. G.).
25th May ..	P upon 6/87 in a triangle, W W Nopal below, " City of Leicester."	1	Piece tube (broken into 2 pieces).
21st May ..	A K C upon L C, A 2, " City of Leicester " ..	1	Case merchandise.
5th June ..	D & S in a diamond, 1/25, " City of Durham " ..	25	Cases whisky (W. G.).
5th June ..	D & S in a diamond 26, " City of Durham " ..	1	Case sample of whisky (W.G.).
17th June ..	N P in a diamond, " Malakuta "	1	Bale merchandise.
30th June ..	F in a triangle, " Talamba "	4	Cases paper umbrellas.
25th June ..	A B S, " Frauenfels "	1	Bag vegetable seeds.
24th June ..	Zimmder in a triangle, S S on top, 5933 below, " Frauenfels."	1	Case merchandise.
18th July ..	7933 in a triangle, Kustia below 1, " City of Hankow "	1	Case merchandise.
30th July ..	D N in a triangle, I I on top, 6/7, " Genoa Maru "	2	Cases silk goods.
30th July	B C P W in a diamond, " Genoa Maru " ..	1	Bag merchandise.
30th July ..	N in a diamond, E E on top 528, " Genoa Maru "	1	Bale merchandise.
25th April ..	D L G P upon V C in a diamond 1, " Kutsang "	1	Case sample mattings.
25th April ..	No mark, " Kutsang "	1	Pair brown canvas shoes.
21st May ..	K S in a diamond, " Takada "	1	Case syrup.
5th June ..	D R J upon Nepal, " Suisang "	1	Case sample of canvas shoes.
2nd July ..	D C M upon & Co in a diamond, C S Co on top 129, "City of Lancaster."	1	Case silk goods.
30th July ..	No mark, " Olivolo "	47	Empty iron drums.
30th July ..	S in a diamond, Leon below 2066/80, 2198/212, 111/20, " Olivolo."	40	Cases mica.
14th April ..	No mark, " Schoikerk "	2	Pieces sockets.
11th April ..	Agents sample, 1 " Schiekerk "	1	Case beer.
30th April ..	G S upon M in a heart, D on top, " Malacca Maru "	1	Bag cement.
30th April ..	No mark, " Malacca Maru "	..	A quantity of cement sweepings weighing about 10 cwts.
8th June ..	G B, " Streefkerk "	1	Case samples.
12th June ..	No mark, " Streefkerk "	2	Pieces E cups.
22nd May ..	N S K in a diamond. S & on top, Co Ltd below, "Seattle Maru."	1	Bag cement.
22nd May ..	G S upon M in a heart, D on top, " Seattle Maru " ..	1	Bag cement.
22nd May ..	No mark, " Seattle Maru "	1	Bag cement.
27th July ..	L S D upon 166 in a diamond, H C on top, B C below 161/93, " Tancred ."	33	Bales paper.
1st July ..	No mark, " Penang Maru "	1	Piece " Lungi " cloth.
1st July ..	G S upon M in a heart, D on top, " Penang Maru "	2	Bags cement.
19th May ..	U C S 260A, " Diplomat "	1	Case advertising matters.
28th May ..	A H D in a diamond, " Kumsang "	1	Package paint.
28th May ..	No mark, " Kumsang "	2	Bags cement.
10th July ..	D & S in a diamond 1/25, " Mahratta " ..	25	Cases wine and advertising matters. (W. G.).
6th July ..	Laxmi, " Mahratta "	1	Empty cask (H. G.).
22nd July ..	No mark, " Morioka Maru "	1	Cask cement.
9th April ..	S P upon L in an inverted triangle 3069, " Masirah "	1	Dog kennel.
24th April ..	No mark, " Knoxville City "	2	Tins grape nuts.

Date of landing.	Marks and numbers.	Quantity.	Description.
1931.			
30th April ..	E H H or E H D in a diamond 1, " Matra " ..	1	Case glassware.
30th May ..	A S in a triangle 1/3, " Rotenfels "	3	Pieces " Aspen " logs.
5th June ..	G S upon N in a heart, D on top, " Rangoon Maru "	2	Bags merchandise.
16th June ..	N M in a diamond within a Block, " Tilawa " ..	8	Cases empty cigarette tins and cigarette wrapping paper.
23rd June ..	No mark, " Tacoma Maru "	1	Piece cloth.
6th July ..	Asano " Tacoma Maru "	1	Cask cement.
1st July ..	K V 19, " Stolzenfels "	1	Bundle planks.
27th June ..	L S D upon 166 in a diamond, H C on top, B C below 121/153, " Stolzenfels ".	33	Bales paper.
27th June ..	P & Co 20103/4, 20174/82, 20110, " Stolzenfels " ..	12	Cases merchandise.
29th July ..	Bower upon Lusu, " Mashobra "	25	Bales cotton.
30th July ..	D & S 1/40, " Mashobra "	40	Cases wine (W.G.).
30th July ..	D & S 41, " Mashobra "	1	Case publicity.
29th July ..	S & C in a triangle, L & on top, " Mashobra " ..	2	Cases oil.
	Unidentified goods of Jetties.		
	G S upon M in a heart, D on top	1	Bag cement.
	N S K in a diamond, S & on top, Co below ..	1	Ditto.
1931.	J E upon T A D N A C or Nil	1	Piece tin slab.
6th April ..	D S 3456/67, " Sonenfels "	12	Cases wine (W.G.).
2nd July ..	D & Sons in a Block, " Mulbera "	6	Cases wine (W.G.).
2nd July ..	D & S in a diamond, " Mulbera "	51	Cases wine (W.G.).
27th July ..	D & S, " Nagpur "	10	Cases wine (W.G.).
29th July ..	D & S, " Barenfels "	50	Cases wine (W.G.).
15th May ..	No mark, " City of Auckland "	3	Bales cotton (H. G.).
15th May ..	No mark, " City of Auckland "	1	Case kerosene oil (H. G.).
	Unclaimed goods of I. V. Wharves.		
	No mark	..	A lot of miscellaneous articles containing empty tins, drums, rope, jute, scantlings, umbrellas, shoes, gunny bags, weights, soda-water bottles, tin box, mattress (fibre), koy rings, flour preparation and attache cases, etc.
1931.			
23rd February ..	Birla Bros Ld, " Bintang "	2	Boxes sample bottles.
23rd February ..	Birla Bros., Ld, " Bintang "	1	Case sample lubricating oil.
13th March ..	Mr. M. Lawrent, Galstaun Mansions, Park Street, Calcutta, " Tabian ".	1	Case mercury.
6th April ..	D B U upon 2601, " Sounenfels "	1	Case printed matters.
8th April ..	Kensington, 11954, " Sounenfels "	1	Case advertisements.
7th April ..	F. Bertelli & Co, Calcutta, 1/2, " City of Melbourne "	2	Cases paste wax.
11th April ..	D C 5934, " Truenfels "	1	Case merchandise.
13th April ..	E A Keilens, Esq, " Truenfels "	1	Parcel merchandise.
25th April ..	L H E, N/N, " Mandala "	1	Case biscuit sample.
2nd May ..	L G 12, " Altenfels "	1	package glassware samples.
4th May ..	B K Calcutta 9, " Silverbeech "	162	Bags sago flour.
9th May ..	W. M. Brindlay, R S Co, N/N, Jagannath Ghat, " Merkera."	2	Cases dry fruits.

Date of landing.	Marks and numbers.	Quantity.	Description.
1931.			
25th May ..	Bendoredjo H V A seeds, B K in a block, "Batoe" ..	869	Bags tapioca seeds.
1st June ..	L A T, Calcutta "Tennessie"	1	Tin sample oil.
10th June ..	Bendoredjo H V A seeds, B K in a block, "Silverash	1	Bag tapioca seeds.
17th June ..	2211 in a diamond, W K on top, N G below 1, "Jeypore"	1	Case perfumery.
24th June ..	Balikram Kissenchand, "Silvermaple"	1	Parcel printed matter.
2nd July ..	B K P & Co 1555/65, "Mulbera"	11	Cases drugs.
2nd July ..	D & S in a diamond, 2196 below, "Mulbera" ..	1	Case advertisements.
2nd July ..	39 in a diamond, R R on top, 2231 below, "Mulbera"	1	Case essential oil.
6th July ..	L D in a diamond, Phelps on top, N/N, "Maidan"	1	Case advertisements.
10th July ..	B K, Calcutta, "Bintang"	2	Packets sago flour samples.
15th July ..	M T Ltd, Calcutta, 201, "Steel Engineer" ..	1	Case films.
15th July ..	M T Ltd, Calcutta, 601/4, "Steel Engineer" ..	4	Cases records.
15th July ..	M T Ltd, Calcutta, 1/2, "Steel Engineer" ..	2	Cases advertising matters.
15th July ..	T W N 122434, "Axonfels"	1	Case typewriter.
18th July ..	T W N, Ferozabad, 81970, "Axonfels" ..	1	Case typewriter.
20th July ..	B B H E round a cross within a triangle, Darjeeling 1/4, "Malda".	4	Cases preserves.
21st July ..	A C R, "Silverbello"	220	Bags tapioca seeds.
25th July ..	K in a diamond, N/N, "Nagpur"	1	Case merchandise.
27th July ..	2386 upon 31277 in a diamond, G A on top & Co below 11, "Mesirah".	1	Bale knitting wool.
27th July ..	2386 upon 31317 in a diamond, G A on top & Co below 15, "Mesirah".	1	Bale knitting wool.
27th July ..	Jorchert Deepling, 70, 45, "Mesirah"	2	Cases machinery.
29th July ..	Ezakiel, "Barenfels"	3	Cases beer (out of which 2 cases empty and 1 case broken).
29th July ..	India I Agencios, "Barenfels"	1	Case vegetable products.
30th July ..	F B S A upon J. J., "Barenfels"	48	Bags maize starch.
7th July ..	No mark, "Yomachichi"	2	Phials medicine.
7th July ..	No mark, "Yomachichi"	1	Piece machinery part.
18th February ..	Ralli Madras "Ohkuni Maru"	1	Bag white sugar.
From 29th December 1930 to 21st July 1931.	Various, "Various"	58	Packages sugar samples.
	Unidentified goods of Kidderpore Dock.		
	C C C, Colombo	2	Broken pieces metal.

NOTICE of sale under sections 118 and 119 of the Calcutta Port Act, III of 1890 (B.C) and sections 55 and 56 of the Indian Railways Act, IX of 1890.

The undermentioned consignments if not removed within fifteen days on payment of all charges due will be sold by public auction :—

Serial No.	Quantity and description of goods.	Station from—	Station to—	Invoice No.	Railway Receipt No.	Date.	Consignees.
						1930.	
1	1 bag expeller cake	Sahebgunge Ghat.	Kantapuker	3	2012	17th December	Messrs. Dhanraj Sagarmall.
2	1 piece cast iron fittings.	Barakar ..	Kidderpore Docks.	26	040509	6th December	Messrs. Martin & Co.

Calcutta, the 17th September 1931.

H. H. HUDSON, *Traffic Manager (actg.).*

(1890—1)

Notice.

PURSUANT to the orders of Government, dated the 29th June 1881, particulars of the undernoted articles, held by the Calcutta Port Commissioners as Receivers of Wrecks, each article being of value exceeding Rs. 100, are published for general information in accordance with the provisions of section 276 of Act XXI of 1923 :—

No. and date in Recovery Register.			Description of article.	Approximate value.	Where and when recovered.	Where lying.
				Rs. A.		
September 1931 ..	10th ..	5 P.	2½ tons patent anchor, 30 fms. of 2" S. L. chain.	1,115 12	On the 23rd August 1931 in mid-stream at Budge-Budge.	On the foreshore above Tuckta Ghat.

C. V. L. NORCOCK, Deputy Conservator.

Port Commissioners' Office, Calcutta, the 10th September 1931. (1934—3)

In the 1st Court of the Sub-Judge at Alipore, district 24-Parganas.

TITLE SUIT No. 113 of 1931.

Hem Chandra Banerji, plaintiff,

v.

Amiya Nath Banerji and others, defendants.

To Sm. Annapurna Devi, late of 20, Doctor's Lane, Calcutta, defendant No. 3.

NOTICE is hereby given to Sm. Annapurna Devi, late of 20, Doctor's Lane, Calcutta, defendant No. 3 in the above case, that the plaintiff abovenamed brought a suit for declaration, injunction, etc., against herself along with the other defendants and that she is to appear on the 22nd September 1931 before the above Court to file her defence, if any, and for settling issues in the above suit, failing which the above suit will be disposed of *ex parte* against herself on that date.

Dated the 10th September 1931.

[ILLEGIBLE], Sub-Judge.

(1905—1)

In the High Court of Judicature at Fort William in Bengal, in insolvency.

NOTICE OF ADJUDICATION ORDER.

No. 195 of 1931.

Re Moti Lal Sain of No. 55-A, Shambazar Street, in the town of Calcutta, a pleader in the Court of Small Causes, Calcutta. *Ex parte* the creditor.

Susil Kumar Ghosh, creditor's solicitor.

ON the 18th day of August 1931, an order was made by the High Court of Judicature at Fort William in Bengal in its insolvency jurisdiction adjudging the abovenamed as an insolvent.

NOTE.—All debts due to the estate should be paid to me.

Dated this 11th day of September 1931.

G. M. FALKNER, Official Assignee.

In the High Court of Judicature at Fort William in Bengal, in insolvency.

NOTICE OF ADJUDICATION ORDER.

No. 206 of 1931.

Re Claude Henry Williamson, residing at No. 47, Ripon Street, in the town of Calcutta, and lately employed by Messrs. Burn & Co., Ltd., Calcutta, but at present working as a canvasser, *ex parte* the debtor in person.

ON the 17th day of August 1931, an order was made by the High Court of Judicature at Fort William in Bengal in its insolvency jurisdiction adjudging the abovenamed as an insolvent.

NOTE.—All debts due to the estate should be paid to me.

Dated this 9th day of September 1931.

G. M. FALKNER, Official Assignee.

In the High Court of Judicature at Fort William in Bengal, in insolvency.

NOTICE OF ADJUDICATION ORDER.

No. 215 of 1931.

Re Derrick Imray deMagry, residing at No. 13, Bow Street, in the town of Calcutta, a telegraphist in the Government Telegraph Office, Calcutta, *ex parte* the debtor in person.

ON the 29th day of August 1931, an order was made by the High Court of Judicature at Fort William in Bengal in its insolvency jurisdiction adjudging the abovenamed as an insolvent.

NOTE.—All debts due to the estate should be paid to me.

Dated this 9th day of September 1931.

G. M. FALKNER, Official Assignee.

In the High Court of Judicature at Fort William in Bengal, in insolvency.

NOTICE OF ADJUDICATION ORDER.

No. 216 of 1931.

Re Albert Charles Awdry, residing at suite No. 7, Minto Mansion, in the town of Calcutta, and employed as a foreman under the Commissioners for the Port of Calcutta of No. 15, Strand Road, in Calcutta aforesaid, *ex parte* the debtor in person.

ON the 1st day of September 1931, an order was made by the High Court of Judicature at Fort William in Bengal in its insolvency jurisdiction adjudging the abovenamed as an insolvent.

NOTE.—All debts due to the estate should be paid to me.

Dated this 8th day of September 1931.

G. M. FALKNER, Official Assignee.

In the High Court of Judicature at Fort William in Bengal, in insolvency.

NOTICE OF ADJUDICATION ORDER.

No. 217 of 1931.

Re Jogendra Nath Seal, residing at No. 10, Ghose Lane, in the town of Calcutta, a clerk in the employ of Messrs. National Insurance Company, Limited, of No. 7, Council House Street, in Calcutta aforesaid, *ex parte* the debtor.

F. C. Kar, debtor's solicitor.

ON the 1st day of September 1931, an order was made by the High Court of Judicature at Fort William in Bengal in its insolvency jurisdiction adjudging the abovenamed as an insolvent.

NOTE.—All debts due to the estate should be paid to me.

Dated this 9th day of September 1931.

G. M. FALKNER, Official Assignee.

In the High Court of Judicature at Fort William in Bengal, in Insolvency.

NOTICE OF ADJUDICATION ORDER.

No. 218 of 1931.

Re Reginald Norman Fox, lately residing at No. 10, Park Chambers, Park Street, in the town of Calcutta, and now residing at No. 58, Barrack Road, Barrackpore, and employed as an assistant by Messrs. Lyons (India), Ltd., at No. 11, British Indian Street, Calcutta, *ex parte* the debtor in person.

ON the 1st day of September 1931, an order was made by the High Court of Judicature at Fort William in Bengal in its insolvency jurisdiction adjudging the abovenamed as an insolvent.

NOTE.—All debts due to the estate should be paid to me.

Dated this 8th day of September 1931.

G. M. FALKNER, Official Assignee.

In the High Court of Judicature at Fort William in Bengal, in Insolvency.

NOTICE OF ADJUDICATION ORDER.

No. 219 of 1931.

Re Reginald Wilson Hall, lately residing at No. 11, Camac Street, in the town of Calcutta, but at present of No. 216-2, Lower Circular Road, working as an assistant under Messrs. William Heath of No. 5, Park Street, in Calcutta aforesaid, *ex parte* the debtor.

Pal and Roy, debtor's solicitors.

ON the 1st day of September 1931, an order was made by the High Court of Judicature at Fort William in Bengal in its insolvency jurisdiction adjudging the abovenamed as an insolvent.

NOTE.—All debts due to the estate should be paid to me.

Dated this 10th day of September 1931.

G. M. FALKNER, Official Assignee.

In the High Court of Judicature at Fort William in Bengal, in Insolvency.

NOTICE OF ADJUDICATION ORDER.

No. 220 of 1931.

Re Margeat Rogers, residing at No. 1, Sooterkin Street, in the town of Calcutta, unemployed, *ex parte* the debtor in person.

ON the 2nd day of September 1931, an order was made by the High Court of Judicature at Fort William in Bengal in its insolvency jurisdiction adjudging the abovenamed as an insolvent.

NOTE.—All debts due to the estate should be paid to me.

Dated this 10th day of September 1931.

G. M. FALKNER, Official Assignee.

In the High Court of Judicature at Fort William in Bengal, in Insolvency.

NOTICE OF ADJUDICATION ORDER.

No. 221 of 1931.

Re Eric Sydney Manuel, lately residing at No. 24/1, Sheriff Lane, in the town of Calcutta, at present residing at No. 27, Haris Mukherjee Road, Bhowanipur, and employed by Messrs. C. Lazarus & Co., Ltd., Calcutta, *ex parte* the debtor in person.

ON the 2nd day of September 1931, an order was made by the High Court of Judicature at Fort William in Bengal in its insolvency jurisdiction adjudging the abovenamed as an insolvent.

NOTE.—All debts due to the estate should be paid to me.

Dated this 11th day of September 1931.

G M. FALKNER, Official Assignee.

In the High Court of Judicature at Fort William in Bengal, in Insolvency.

No. 65 of 1929.

Re Madhoram Rajendraprosad, insolvents.

Ex parte Nopechand Mugneeram, creditors.

NOTICE is hereby given that the insolvents having failed to apply for their discharge for a period of 27 months from the date of the order of adjudication order, the Court has fixed the 27th day of September 1931 at 11 o'clock in the forenoon at the Court House for the hearing of the application on behalf of the creditors abovenamed for annulment of the adjudication order, dated the 8th day of September 1931.

Dated the 8th day of September 1931.

S. K. KERR,

Solicitor for the said creditors.

(1877—1—1941)

In the High Court of Judicature at Fort William in Bengal, in Insolvency.

No. 10 of 1931.

Re Estate Abdul Kahar Mirday.

THE abovenamed insolvent residing at No. 20, Dharrumtolla Street, Calcutta, and carrying on business in hosiery goods at No. 38, 39, Chandney Chowk, under the name and style of A. K. Mirday and at 30, 33, North Range, Hogg Market, under the name and style of European Economic Stores, having died without filing a schedule of his affairs, notice is hereby given to the persons claiming to be creditors of the above estate to file their claims in this office supported by affidavit and necessary vouchers by the 25th instant after which date no claims received by this office will be considered.

Persons who have already lodged their claims need not file any fresh claim. A form of affidavit may be had on application.

Notice is hereby given that a dividend is intended to be declared in the above estate.

G. M. FALKNER, Official Assignee.

10, Old Post Office Street, Calcutta, 10th September 1931.

(1889—1)

In the Court of the District Judge of Burdwan.

INSOLVENCY CASE No. 24 of 1931.

NOTICE is hereby given to the creditors that the insolvency petition filed by the debtor Indra Narayan Hazra, son of late Durgadas Hazra, of Palitpur, police-station Burdwan, has been admitted and that the 21st day of September 1931 has been fixed for hearing of the petition.

J. DE, District Judge.

Burdwan, the 17th August 1931. (1746—1—1907)

In the Court of the District Judge of Burdwan.

INSOLVENCY CASE No. 25 of 1931.

NOTICE is hereby given to the creditors that Birinchi Kumar Banerjee, Sitaram Banerjee and Heramba Kumar Banerjee, proprietors to the firm Nagendra Nath Banerjee and Sons of Guskara, police-station Ausgram, district Burdwan, have applied to be adjudicated an insolvent. The petition has been admitted and the 23rd day of September 1931 has been fixed for hearing the petition.

J. DE, District Judge.

Burdwan, the 12th September 1931. (1913—1)

ORDER ANNULLING ADJUDICATION.

Section 35 of the Provincial Insolvency Act, V of 1920.

In the Court of the District Judge at Chittagong.

INSOLVENCY APPLICATION No. 15 of 1930.

Surja Kumar Das, son of Kebal Krishna Das, of Kalauzan, police-station Satkania, applicant.

THE applicant not having complied with the Court's order, it is ordered that the order of adjudication, dated 7th November 1930, against Surja Kumar Das of Kalauzan, be and the same is hereby annulled.

Dated this 24th day of July 1931.

J. YOUNIE, District Judge.

(1811—1—1954)

In the Court of the District Judge of Dinajpur.

INSOLVENCY CASE No. 81 OF 1930.

SAFIUDDIN MAHAMMAD, son of Saritulla Molla, resident of Jogibari, police-station Kotwali, district Dinajpur, has applied for discharge. The 22nd day of September 1931 has been fixed for hearing of the application at Dinajpur.

J. N. MUKHARJI, *for* District Judge.

Dinajpur, the 3rd September 1931. (1848—1)

In the Court of the District Judge of Dinajpur.

INSOLVENCY CASE No. 58 OF 1931.

NIDHU BHUSAN DUTTA, son of Paramananda Dutta, deceased, resident of Bhabanipur, police-station Birole, district Dinajpur, has applied to this Court to be adjudged insolvent. The 23rd day of September 1931 has been fixed for examination of the petitioner at Dinajpur.

J. N. MUKHARJI, *for* District Judge.

Dinajpur, the 3rd September 1931. (1849—1)

In the Court of the District Judge of Dinajpur.

INSOLVENCY CASE No. 59 OF 1930.

ISWAR CHANDRA BARMAN, son of Bhati Barman, deceased, resident of Ramnagar, police-station Kotwali, district Dinajpur, has applied for discharge. The 21st day of September 1931 has been fixed for hearing of the application at Dinajpur.

J. N. MUKHARJI, *for* District Judge.

Dinajpur, the 3rd September 1931. (1850—1)

In the Court of the District Judge of Faridpur.

INSOLVENCY CASE No. 61 OF 1930.

Basar Karikar, son of late Nasiraddi Karikar, of Gopalpur, police-station Kotwali, district Faridpur, petitioner.

NOTICE is hereby given that the order of adjudication, dated the 17th January 1931, made against the said debtor has been annulled.

A. N. SEN, District Judge.

Faridpur, the 2nd September 1931. (1846—1)

In the Court of the District Judge of Faridpur.

INSOLVENCY CASE No. 19 OF 1931.

Kanai Lal Roy, son of late Sital Chandra Roy, of Char Bhadrasan, Part III, police-station Char Bhadrasan, district Faridpur, creditor-petitioner.

Biswanath Biswas, son of late Bhairab Biswas, of Char Bhadrasan, Part III, police-station Char Bhadrasan, district Faridpur, debtor-opposite party.

NOTICE is hereby given that the abovenamed creditor has applied to this Court under Act V of 1920 to have the abovenamed debtor adjudged insolvent and 24th September 1931 has been fixed for the hearing of the application.

A. N. SEN, District Judge.

Faridpur, the 3rd September 1931. (1853—1)

In the Court of the District Judge of Hooghly.

NOTICE is hereby given, under clause (*2*) of section 12 of the Provincial Insolvency Act, V of 1920, to his creditors that the insolvency petition of Panchanon Seth, son of late Dono Nath Seth of Bhangamora, thana Pursura, district Hooghly, has been admitted by this Court as No. 47 of 1931 and that the 1st October 1931 has been fixed for the hearing thereof.

S. SEN, District Judge.

Chinsura, the 2nd September 1931. (1856—1—1909)

In the Court of the Addl. Sub-Judge, Malda.

NOTICE is hereby given under the Provincial Insolvency Act, V of 1920, to his creditor that the petition of Madhi Mondol, son of late Sahabat Mondol of Karamja, police-station Gomastapur, district Malda, has been admitted by this office in Insolvency Case No. 7 of 1931 and that the 26th day of September 1931 has been fixed for hearing thereof.

N. N. GUHA, Addl. Sub-Judge.

Malda, the 5th September 1931. (1854—1—1908)

In the Court of the District Judge of Nadia.

INSOLVENCY CASE No. 25 OF 1929.

Indra Gopal Bose, son of late Durga Das Bose, of Ranaghat, police-station Ranaghat, district Nadia, petitioner.

NOTICE is hereby given, under section 41 of the Provincial Insolvency Act, V of 1920, to his creditors that the abovenamed insolvent has applied for discharge and that 3rd October 1931 has been fixed for the hearing thereof.

S. N. MODAK, District Judge.

Krishnagar, the 8th September 1931. (1857—1)

In the Court of the District Judge of Nadia.

INSOLVENCY CASE No. 19 OF 1931.

Gopal Chandra Das, son of late Mahabharat Das, of Nabadwip, police-station Nabadwip, district Nadia, petitioner.

NOTICE is hereby given, under clause 2 of section 19 of the Provincial Insolvency Act, V of 1920, to his creditors that the abovenamed petitioner has filed an insolvency petition and that 3rd October 1931 has been fixed for the hearing thereof.

S. N. MODAK, District Judge.

Krishnagar, the 10th September 1931. (1887—1)

In the Court of the District Judge of Rajshahi.

INSOLVENCY CASE No. 49 OF 1931.

NOTICE is hereby given that Radha Raman Shah of Polladanga, police-station Shibganja, district Malda, has applied under Act V of 1920 to be adjudicated an insolvent and that 1st October 1931 is fixed for hearing of the application.

K. N. DUTT, District Judge.

Rajshahi, the 2nd September 1931. (1884—1—1951)

In the Court of the District Judge of Rajshahi.

INSOLVENCY CASE No. 51 OF 1931.

NOTICE is hereby given that Raghu Nath Dutta of Rajarhata, police-station Boalia, district Rajshahi, has applied under Act V of 1920 to be adjudicated an insolvent and that 1st October 1931 is fixed for hearing of the application.

K. N. DUTT, District Judge.

Rajshahi, the 2nd September 1931. (1885—1—1952)

In the Court of the District Judge of Rajshahi.

INSOLVENCY CASE No. 52 OF 1931.

NOTICE is hereby given that Faratullya Pramanik of Andariapara, police-station Nandonali, district Rajshahi, has applied under Act V of 1920 to be adjudicated an insolvent and that 6th October 1931 is fixed for hearing of the application.

K. N. DUTT, District Judge.

Rajshahi, the 8th September 1931. (1886—1—1953)

In the Court of the District Judge of Rangpur.

INSOLVENCY CASE No. 18 OF 1931.

ON the application of the debtor Nabin Chandra Barman, son of late Nandaram Barman, of Mirganj Shimulbari, police-station Jaldhaka in Rangpur, for being adjudged an insolvent, the 28th day of September 1931 has been fixed for hearing the aforesaid petition and the examination of the debtor.

A. M. AHMAD, District Judge.

Rangpur, the 3rd September 1931. (1852—1)

NOTICE TO CREDITORS OF APPLICATION FOR DISCHARGE.

Section 41 (*1*) of the Provincial Insolvency Act, V of 1920.

In the Court of the District Judge at Alipore.

INSOLVENCY CASE No. 30 OF 1930.

B. D Deboo of 7, South Road, Entally, 24 Parganas, applicant.

TAKE notice that the abovenamed insolvent has applied at the Court for his discharge, and that the Court has fixed the 28th day of September 1931, at 11 o'clock, for hearing the application.

Dated this 25th day of August 1931

G. G HOOPER, District Judge.

(1795—1—1884)

In the Court of the District Judge of 24-Parganas.

INSOLVENCY CASE No. 43 OF 1931.

Monundranath Rakshit of 131-1, Raja Rajendralal Mitra Road, Bhowanipore, 24 Parganas, applicant.

To Labhchand Rekhab Das, of 16, Pagoyaputty (Parak Kothi), Calcutta, and others, creditors.

ON the 24th day of August 1931 it was ordered that the matter of the petition of the applicant be heard on the 28th day of September 1931 and that the said applicant do attend to be examined by this Court on that date.

G. G. HOOPER, District Judge.

Alipore, the 25th August 1931. (1796—1—1885)

In the Court of the District Judge of 24-Parganas.

INSOLVENCY CASE No. 44 OF 1931

George Hanawar of 37-3, Ekbalpore Road, 24-Parganas, applicant.

To Abdul Kalik of 46, Diamond Harbour Road, Kulderpore and others, creditors.

ON the 29th day of August 1931 it was ordered that the matter of the petition of the applicant be heard on the 28th day of September 1931 and that the said applicant do attend to be examined by this Court on that date.

G. G. HOOPER, District Judge.

Alipore, the 31st August 1931. (1836—1—1904)

In the Court of the District Judge of 24-Parganas.

INSOLVENCY CASE No. 45 OF 1931.

Sarat Chandra Bhattacharjee of Sripur, also known as Boral, police-station Sonarpur, 24-Parganas, applicant.

To Latik Chandra Basu of 4, Govinda Addy Road, Chetla, post office Alipore, Calcutta, and others, creditors.

ON the 28th day of August 1931, it was ordered that the matter of the petition of the applicant be heard on the 28th day of September 1931 and that the said applicant do attend to be examined by this Court on that date.

G. G. HOOPER, District Judge.

Alipore, the 31st August 1931. (1837—1—1905)

NOTICE TO CREDITORS OF APPLICATION FOR DISCHARGE.

Section 41(*1*) of the Provincial Insolvency Act, V of 1920.

In the Court of the District Judge at Alipore.

INSOLVENCY CASE No. 42 OF 1930.

Prafulla Chandra Ghosh of 8, Raypara Lane, Sinthi, 24-Parganas, applicant.

TAKE notice that the abovenamed insolvent has applied at the Court for his discharge, and that the Court has fixed the 5th day of October 1931, at 11 o'clock, for hearing the application.

Dated this 31st day of August 1931.

G. G. HOOPER, District Judge.

(1838—1—1906)

NOTICE TO CREDITORS OF APPLICATION FOR DISCHARGE.

Section 41(*1*) of the Provincial Insolvency Act, V of 1920.

In the 4th Court of the Sub-Judge at Alipore.

INSOLVENCY CASE No. 270 OF 1930.

Fanindramohan Banerjee of 26, Mondal Street, Calcutta, applicant.

TAKE notice that the abovenamed insolvent has applied at the Court for his discharge, and that the Court has fixed the 21st September 1931, at 11 o'clock, for hearing the application.

Dated this 10th day of June 1931

S. N. ROY, Sub-Judge.

(1294—1 1942)

In the 4th Court of the Sub-Judge of 24 Parganas.

INSOLVENCY CASE No. 303 OF 1931.

Akshoy Kumar Ghosh of 47, Pathuria Ghata Street, Calcutta, creditor-applicant.

To William Star Jordon, at present of 9, Lansdowne Road, Bhowanipore, 24-Parganas, debtor

ON the 8th day of August 1931, it was ordered that the matter of the petition of the applicant be heard on the 21st September 1931 and that the said applicant do attend to be examined by this Court on that date.

S. N. ROY, Sub-Judge.

Alipore, the 11th August 1931. (1713 -1- 1944)

ORDER OF ADJUDICATION.

Section 27 of the Provincial Insolvency Act, V of 1920.

In the 4th Court of the Sub-Judge at Alipore.

INSOLVENCY APPLICATION No. 113 OF 1930.

PURSUANT to a petition, dated 19th March 1930, filed by Babu Raja Ram Prasad Tantri of Ramsita Bagan Bye Sura Main Road, Behaghata, 24-Parganas, debtor, and on the application of the debtor himself and on reading his application and hearing his pleader, it is ordered that the debtor be and the said debtor is hereby adjudged insolvent.

It is further ordered that the debtor do apply for his discharge within six months from this date.

Dated this 11th day of August 1931.

S. N ROY, Sub-Judge.

(1732—1—1949)

ORDER OF ADJUDICATION

Section 27 of the Provincial Insolvency Act, V of 1920.

In the 4th Court of the Sub-Judge at Alipore.

INSOLVENCY APPLICATION No. 129 OF 1931.

PURSUANT to a petition, dated 2nd April 1931, filed by Moni Mohan Dhali of Bamanghata, Dharpara, Bhangore, 24-Parganas, debtor, and on the application of the debtor himself and on reading his application and hearing his pleader, it is ordered that the debtor be and the said debtor is hereby adjudged insolvent.

It is further ordered that the debtor do apply for his discharge within six months from this date.

Dated this 11th day of August 1931.

S. N. ROY, Sub-Judge.

(1733—1—1950)

ORDER OF ADJUDICATION.

Section 27 of the Provincial Insolvency Act, V of 1920.

In the 4th Court of the Sub-Judge at Alipore.

INSOLVENCY APPLICATION No 195 OF 1931.

PURSUANT to a petition, dated 14th May 1931, filed by Akshoy Kumar Naskar, of Hatgacha, Bhangar, 24-Parganas, debtor, and on the application of the debtor himself and on reading his application and hearing his pleader, it is ordered that the debtor be and the said debtor is hereby adjudged insolvent.

It is further ordered that the debtor do apply for his discharge within six months from this date.

Dated this 11th day of August 1931.

S. N. ROY, Sub-Judge.

(1734—1—1943)

In the 4th Court of the Sub-Judge of 24-Parganas.

INSOLVENCY CASE No. 309 OF 1931.

Madan Lal Agarwala of 13, South Street, Dum-Dum Cantonment, Gorabazar, thana Dum-Dum, 24-Parganas, applicant.

To Jowarmal Trinorani of 16, Pagoyaputty, Barabazar, Calcutta, and others, creditors.

ON the 12th day of August 1931, it was ordered that the matter of the petition of the applicant be heard on the 21st day of September 1931 and that the said applicant do attend to be examined by this Court on that date.

S. N. ROY, Sub-Judge.

Alipore, the 13th August 1931. (1735—1—1947)

In the 4th Court of the Sub-Judge of 24-Parganas.

INSOLVENCY CASE No. 314 OF 1931.

Buddhu *alias* Ram Kishan Show of Entally, Matijhil, No. 4, Convent Lane, 24-Parganas, applicant.

To Karu Das Show of Kankinara, 24-Parganas, and others, creditors.

ON the 11th day of August 1931, it was ordered that the matter of the petition of the applicant be heard on the 21st day of September 1931 and that the said applicant do attend to be examined by this Court on that date.

S. N. ROY, Sub-Judge.

Alipore, the 13th August 1931. (1736—1—1946)

In the 4th Court of the Sub-Judge of 24-Parganas.

INSOLVENCY CASE No. 316 OF 1931.

Abdul Majid of 112, Karaya Road, Ballygunge, 24-Parganas, applicant.

To Sk. Haji Mahammad & Bros., of 60, Chandni Chak Street, and another, creditors.

ON the 11th day of August 1931, it was ordered that the matter of the petition of the applicant be heard on the 21st day of September 1931 and that the said applicant do attend to be examined by this Court on that date.

S. N. ROY, Sub-Judge.

Alipore, the 13th August 1931. (1737—1—1945)

In the 4th Court of the Sub-Judge of 24-Parganas.

INSOLVENCY CASE No. 318 OF 1931.

Ram Kissen Show of Titagarh, 24-Parganas, applicant.

To Deb Nagar Sing of Titagarh, 24-Parganas, and others, creditors.

ON the 11th day of August 1931, it was ordered that the matter of the petition of the applicant be heard on the 21st day of September 1931 and that the said applicant do attend to be examined by this Court on that date.

S. N. ROY, Sub-Judge.

Alipore, the 13th August 1931. (1738—1—1948)

In the 4th Court of the Sub-Judge of 24-Parganas.

INSOLVENCY CASE No. 325 OF 1931.

Gopee Nath Bhattacharjee *alias* Chakraverty of Bhukailash Debuttar Estate, Kidderpore, 24-Parganas, applicant.

To Sm. Kusum Kamini Debi, post office and village Baherak, district Dacca, and others, creditors.

ON the 21st day of August 1931, it was ordered that the matter of the petition of the applicant be heard on the 28th day of September 1931, and that the said applicant do attend to be examined by this Court on that date.

S. N. ROY, Sub-Judge.

Alipore, the 24th August 1931. (1814—1—1886)

In the 4th Court of the Sub-Judge of 24-Parganas.

INSOLVENCY CASE No. 326 OF 1931.

Sreemati Nalini Bala Devi, 166, Kalighat Road, police-station Bhowanipore, applicant.

To Paritosh Mukherjee, 24, Haldarpara Road, Kalighat, 24-Parganas, creditor.

ON the 20th day of August 1931, it was ordered that the matter of the petition of the applicant be heard on the 28th day of September 1931 and that the said applicant do attend to be examined by this Court on that date.

S. N. ROY, Sub-Judge.

Alipore, the 24th August 1931. (1815—1—1887)

In the 4th Court of the Sub-Judge of 24-Parganas.

INSOLVENCY CASE No. 330 OF 1931.

Damri Mia, Spence Road, Titagarh, post office Khardaha, 24-Parganas, applicant.

To Ghaneshayam Das Bhojen Lal, merchants of 17, Pagayapatti, Calcutta, and others, creditors.

ON the 18th day of August 1931, it was ordered that the matter of the petition of the applicant be heard on the 21st day of September 1931 and that the said applicant do attend to be examined by this Court on that date.

S. N. ROY, Sub-Judge.

Alipore, the 19th August 1931. (1816—1—1888)

In the 4th Court of the Sub-Judge of 24-Parganas.

INSOLVENCY CASE No. 332 OF 1931.

Ram Nath Lala, of 37-2, Watganj Street, Kidderpore, 24-Parganas, applicant.

To Narsingdas Agarwala of 3, Ashu Babu's Lane, Kidderpore, 24-Parganas, and others, creditors.

ON the 20th day of August 1931, it was ordered that the matter of the petition of the applicant be heard on the 28th day of September 1931 and that the said applicant do attend to be examined by this Court on that date.

S. N. ROY, Sub-Judge.

Alipore, the 21st August 1931. (1817—1—1889)

In the 4th Court of the Sub-Judge of 24-Parganas.

INSOLVENCY CASE No. 334 OF 1931.

Kshirodhar Shaw of 20, Kalabagan, Beliaghata, 24-Parganas, applicant.

To Messrs. Kanairam Hazarimull of 86, Harrison Road, Calcutta, and others, creditors.

ON the 21st day of August 1931, it was ordered that the matter of the petition of the applicant be heard on the 28th day of September 1931 and that the said applicant do attend to be examined by this Court on that date.

S. N. ROY, Sub-Judge.

Alipore, the 24th August 1931. (1818—1—1890)

In the 4th Court of the Sub-Judge of 24-Parganas.

INSOLVENCY CASE No. 335 OF 1931.

Jabanulla Sareng of 35, Watganj Street, Kidderpore, 24-Parganas, applicant.

To Lall Mohon Dey of 7, Wellesley Street, Calcutta, and others, creditors.

ON the 22nd day of August 1931, it was ordered that the matter of the petition of the applicant be heard on the 28th day of September 1931, and that the said applicant do attend to be examined by this Court on that date.

S. N. ROY, Sub-Judge.

Alipore, the 24th August 1931. (1819—1—1891)

ORDER ANNULLING ADJUDICATION.

Section 35 of the Provincial Insolvency Act, V of 1920.

In the 4th Court of the Sub-Judge at Alipore.

INSOLVENCY APPLICATION No 364 of 1929.

W M Macleod, applicant.

ON the application of W M Macleod of 35, Loco Quarters, Narikeldanga, debtor, and on reading his application, stating that he has paid off all his debts and hearing his pleader and the receiver, it is ordered that the order of adjudication, dated 29th January 1930, against the debtor be and the same is hereby annulled.

Dated this 25th day of May 1931.

S. N. ROY, Sub-Judge.

(1820—1 1892)

NOTICE TO CREDITORS OF APPLICATION FOR DISCHARGE.

Section 41(*1*) of the Provincial Insolvency Act, V of 1920

In the 4th Court of the Sub-Judge at Alipore.

INSOLVENCY CASE No. 383 of 1930.

Samadali Khan of 23, Tengra Road, police station Entally, 24 Parganas, applicant.

TAKE notice that the abovenamed insolvent has applied at the Court for his discharge and that the Court has fixed the 28th day of September 1931, at 11 o'clock, for hearing the application

Dated this 25th day of August 1931

S. N. ROY, Sub-Judge.

(1821—1—1893)

In the 4th Court of the Sub-Judge of 24-Parganas.

INSOLVENCY CASE No. 329 of 1931.

Raja Ram of Naihati, 24-Parganas, applicant.

To Monilal of Naihati, 24 Parganas, and others, creditors

ON the 25th day of August 1931, it was ordered that the matter of the petition of the applicant be heard on the 28th day of September 1931 and that the said applicant do attend to be examined by this Court on that date.

S N. ROY, Sub Judge

Alipore, the 27th August 1931. (1824—1—1894)

In the 4th Court of the Sub-Judge of 24-Parganas.

INSOLVENCY CASE No. 337 of 1931.

Bepin Behary Ghosh of 30 1, Boniapara Lane, Boniapokor, 24-Parganas, applicant

To Forward Tea Company, 1, Lalbazar Street, Calcutta, and others, creditors

ON the 25th day of August 1931, it was ordered that the matter of the petition of the applicant be heard on the 28th day of September 1931 and that the said applicant do attend to be examined by this Court on that date.

S N. ROY, Sub-Judge.

Alipore, the 27th August 1931. (1825—1 1895)

In the 4th Court of the Sub-Judge of 24-Parganas.

INSOLVENCY CASE No. 341 of 1931.

Abu Nassar of 22, Gorachand Lane, Boniapukur, 24-Parganas, applicant.

To Haji Habib Haji Pir Mohammed of 15, Amratola Lane, Calcutta, and others, creditors.

ON the 27th day of August 1931, it was ordered that the matter of the petition of the applicant be heard on the 28th day of September 1931 and that the said applicant do attend to be examined by this Court on that date.

S. N. ROY, Sub-Judge.

Alipore, the 28th August 1931. (1826—1—1896)

In the 4th Court of the Sub-Judge of 24-Parganas.

INSOLVENCY CASE No. 345 of 1931.

Bhutnath Das of 62-24, Maniktala Main Road, Basak Bagan, Maniktala, 24 Parganas, applicant

To Pokermal Ananda Roy, of 61, Darmahatta Street, Calcutta, and others, creditors.

ON the 21st day of August 1931, it was ordered that the matter of the petition of the applicant be heard on the 28th day of September 1931 and that the said applicant do attend to be examined by this Court on that date.

S N. ROY, Sub Judge

Alipore, the 26th August 1931. (1827 1 1897)

NOTICE TO CREDITORS OF APPLICATION FOR DISCHARGE.

Section 41(*1*) of the Provincial Insolvency Act, V of 1920

In the 4th Court of the Sub-Judge at Alipore.

INSOLVENCY CASE No. 369 of 1930.

B R L Sharpe of 79, Traffic Quarters, Sealdah, 24 Parganas, applicant

TAKE notice that the abovenamed insolvent has applied at the Court for his discharge, and that the Court has fixed the 28th day of September 1931, at 11 o'clock, for hearing the application.

Dated this 27th day of August 1931.

S N. ROY, Sub Judge

(1828 —1 —1898)

ORDER OF ADJUDICATION

Section 27 of the Provincial Insolvency Act, V of 1920.

In the 4th Court of the Sub- Judge at Alipore.

INSOLVENCY APPLICATION No 167 of 1931.

PURSUANT to a petition, dated 30th April 1931 filed by Jugal Kishore Ghose of Baghola, Dum Dum, 24-Parganas, debtor, and on the application of the debtor himself and on reading his application and hearing his pleador, it is ordered that the debtor be and the said debtor is hereby adjudged insolvent

It is further ordered that the debtor do apply for his discharge within six months from this date

Dated this 25th day of August 1931.

S. N. ROY, Sub Judge.

(1831—1—1899)

ORDER OF ADJUDICATION.

Section 27 of the Provincial Insolvency Act, V of 1920.

In the 4th Court of the Sub-Judge at Alipore.

INSOLVENCY APPLICATION No 228 of 1931.

PURSUANT to a petition, dated 7th June 1931, filed by Gobardhan Kurmi of Khardah, 24 Parganas, debtor, and on the application of the debtor himself and on reading his application and hearing his pleader, it is ordered that the debtor be and the said debtor is hereby adjudged insolvent

It is further ordered that the debtor do apply for his discharge within six months from this date.

Dated this 25th day of August 1931.

S N. ROY, Sub Judge.

(1832—1 1900)

ORDER OF ADJUDICATION.

Section 27 of the Provincial Insolvency Act, V of 1920.

In the 4th Court of the Sub-Judge at Alipore.

INSOLVENCY APPLICATION No 228 of 1931

PURSUANT to a petition, dated 10th June 1931, filed by Balai Chand Addy of 13, Baloram Bose 1st Lane, Bhowanipore, 24 Parganas, debtor, and on the application of the debtor himself and on reading his application and hearing his pleador, it is ordered that the debtor be and the said debtor is hereby adjudged insolvent

It is further ordered that the debtor do apply for his discharge within six months from this date.

Dated this 25th day of August 1931.

S N. ROY, Sub-Judge.

(1833—1—1901)

ORDER OF ADJUDICATION.

Section 27 of the Provincial Insolvency Act, V of 1920.

In the 4th Court of the Sub-Judge at Alipore.

INSOLVENCY APPLICATION No. 239 of 1931.

PURSUANT to a petition, dated 15th June 1931, filed by Abdul Kader of 37, Ice Factory Lane, 24-Parganas, debtor, and on the application of the debtor himself and on reading his application and hearing his pleader, it is ordered that the debtor be and the said debtor is hereby adjudged insolvent.

It is further ordered that the debtor do apply for his discharge within six months from this date.

Dated this 25th day of August 1931.

S. N. ROY, Sub-Judge.

(1834—1—1902)

ORDER ANNULLING ADJUDICATION.

Section 43 of the Provincial Insolvency Act, V of 1920.

In the 4th Court of the Sub-Judge at Alipore.

INSOLVENCY APPLICATION No. 349 of 1930.

Bharat Kurmi, applicant.

WHEREAS Bharat Kurmi of 23-1, Rajabali Lane, Goolpara, police-station Ekbalpore, 24-Parganas, debtor, does neither appear nor apply for his discharge within specified time fixed for hearing, it is ordered that the order of adjudication, dated 1 th February 1931, against the debtor be and the same is hereby annulled.

Dated this 19th day of August 1931.

S. N. ROY, Sub-Judge.

ORDER ANNULLING ADJUDICATION.

Section 43 of the Provincial Insolvency Act, V of 1920.

In the 4th Court of the Sub-Judge at Alipore.

INSOLVENCY APPLICATION No. 375 of 1930.

Nitai *alias* Nityananda Roy, applicant.

WHEREAS Nitai *alias* Nityananda Roy of Italghata, Behala, 24-Parganas, debtor, does not take steps for prosecuting with his application for discharge, it is ordered that the order of adjudication, dated 17th February 1931, against the debtor be and the same is hereby annulled.

Dated this 1st day of September 1931.

S. N. ROY, Sub-Judge.

MR. TARAPADA MUKHERJI, M.A., B.L., intends to be enrolled as an Advocate of the Calcutta High Court.

(1728—4—1769)

MR. SHYAMAPADA MAJUMDAR, M.A., B.L., intends to be enrolled as an Advocate of the Calcutta High Court.

(1702—4—1790)

MR. SACHINDRA NATH ROY CHOWDHURY intends to be enrolled as an Advocate, High Court.

(1813—4—1802)

Public Service Commission (India).

APPLICATIONS are invited for the post of Principal, Government College, Ajmer, on a scale of pay of Rs. 600—40—1,000 per mensem. The appointment will, in the first instance, be for two years and the selected candidate will be on probation for the first year.

Applicants should have high educational attainments with special knowledge of the English Language and Literature. Preference will be given to a candidate who possesses some experience of educational administration.

Applicants can obtain further particulars and application forms from the Secretary, Public Service Commission, Kennedy House Annexe, Simla, until the 28th September 1931.

D. REYNELL, Secretary.

Simla, the 9th September 1931. (1928—1)

Professor of Physiology, Medical College, Calcutta.

APPLICATIONS are invited for the above post.

The appointment is for three years in the first instance. Private practice is not allowed.

2. Applicants must have high academic qualifications with teaching experience. They may be members of the Provincial Medical Service or the medical profession generally.

3. Application stating all particulars should reach the Surgeon-General, Bengal, not later than the 14th October 1931.

4. Provincial Medical Service Rs. 650—100/2—1,350 *plus* non-practising allowance of Rs. 150 per mensem less 15 per cent. reduction of pay.

Private Medical Practitioner Rs. 800—50—1,500 per mensem *plus* a non-practising allowance of Rs. 150 per mensem, less 15 per cent. reduction of pay.

5. If a private medical practitioner is selected—

(*a*) his appointment will be on contract for three years ;

(*b*) the appointment will be terminated on 6 months' notice on either side ;

(*c*) the appointment will not be pensionable but the following Special Provident Fund concession will be allowed.

Personal subscription at 8¼ per cent. of pay and Government contribution at 75 per cent. of subscription credited half yearly. Interest will accumulate at the same rate as in the General Provident Fund.

(*d*) The successful applicant will be required to execute an agreement.

Further information will be obtained by enquiry from the Surgeon-General with the Government of Bengal.

Canvassing will disqualify.

Post of Professor of Pathology, Medical College, Calcutta, and Bacteriologist to Government of Bengal.

APPLICATIONS are invited for the above post. General private practice is not allowed.

2. Applicants should have considerable practical experience in Bacteriology and Parasitology in Morbid Anatomy and Histology and experience in teaching these subjects.

3. The appointment is open to men belonging to the medical profession in general including members of the Bengal Medical Service.

4. The rate of pay is Rs. 800—50 1,500 (with an overseas pay of £ 30 for overseas candidates) plus a bacteriological allowance of Rs. 225 subject to reduction of 15 per cent. for new appointment now in force. An overseas candidate, if selected, will be entitled to a first class passage out.

5. If a medical man not in Government employ is selected—

(*a*) his appointment will be on contract for three years ;

(*b*) the appointment will be terminated on 6 months' notice on either side ;

(*c*) the appointment will not be pensioned, but the following special Provident Fund concession will be allowed :—

Personal subscription at 8¼ per cent. of pay and Government contribution at 75 per cent. of subscription credited half-yearly. Interest will accumulate at the same rate as in the General Provident Fund.

(*d*) The successful candidate will be required to execute an agreement.

Further information will be obtained on enquiry from the Surgeon-General with the Government of Bengal and applications stating all particulars should reach him by the 31st December 1931.

Canvassing will disqualify.

WANTED a typist clerk on a time scale of pay of Rs. 40—45-5/2—100 for the office of the Deputy Director of Agriculture, Northern Circle, Rajshahi. None need apply who has not passed at least the Matriculation examination of any recognized University and is not within 25 years of age on the 1st October 1931. Preference will be given to one having good speed in typing and considerable office experience in Government offices. The appointment will be provisional for the present. Apply on or before the 25th September 1931.

A. R. MALIK, Dy. Director of Agriculture,

Northern Circle, Rajshahi.

THE Bengal and Madras Service Family Pension Fund which is provisionally managed and assisted by Government has for its object the provision of monthly pensions for the maintenance of the widows and children of subscribers and is open, with certain exceptions, to all active and pensioned members of the Uncovenanted service of Government (except those serving under the Government of Bombay), and to Local Fund servants earning pensions from Government. Some of the special features of the fund are—(1) that widowed daughters incapable of remarriage or children labouring under such mental or bodily infirmities as incapacitate them from earning their livelihood or preclude the possibility of marriage (in case of a daughter) are admitted to its benefits; and (2) that subscribers to the Widows' and Daughters' branches are entitled to a refund of 30 per cent. of the premia paid, should the nominee predecease them after five years of admission. The second quinquennial valuation of the Fund has been completed by the actuary to the Government of India, and his report discloses very favourable results. For forms of application and rules of the Fund apply to the Accountant-General, Bengal, Imperial Secretariat Buildings, Calcutta.

Sale Notice.

Under section 88, Sea Customs Act (Act VIII of 1878).

THE firearms and goods shown in the schedule below having lain uncleared in the Custom House for over four months will be sold by public auction, if not cleared by 2 p. m. on Friday, the 25th September 1931.

Inspection may be obtained on application to the Inspector in charge of the Custom House.

List of goods for sale in the Custom House under section 88, Sea Customs Act.

Passengers' Firearms.

865	*Ex* SS. Mandala		Diana Air Gun.
876	„ „	Merkara	Revolver by S. & Wesson, No. 20944, ·450 bore and 3 cartridges.
881	„ „	Margha	Air Pistol by Webley and Scott, No. 13373.
893	„ „	Councillor	Waldon Safety Revolver No. 39 with 99 blank cartridges.
902	„ „	Mulbera	Colt Pistol No. 256630, ·25 bore with 67 cartridges.
903	„ „	Mulbera	Webley Revolver No. 386838, ·450 bore with 13 cartridges.
904	„ „	Angora	D. B. Burglar Gun No. 361062, ·20 bore.
911	„ „	Angora	2 cartridges of ·20 bore.
915	„ „	Tilawa	3 S. B. Guns, ·12 bore, by Harrington & Richards.
944	„ „	Nagoya	D. B. Gun by Manton & Co., ·20 bore, No. 3341.
931	„ „	Gambada	Rifle by Ross Rifle Co., ·22 bore.

Seizures.

398	*Ex* SS. Talamba		A Burmese Sword with wooden scabbard.
400		..	6 Chamber Revolver of ·32 bore, No. 18.

Liquor Remnants.

37 bottles various liquors.

Cargo.

Ex SS. City of Lahore 6 cases of French medicine free from spirit.

Passengers' Baggage.

Ex SS. Takliwa	1	Harmonium in wooden case.

M. SLADE, Collector of Customs (offg.).

Calcutta Custom House, the 12th September 1931.

(1927—2)

Notice to creditors under section 10A of Act IX (B.C). of 1879.

WHEREAS under sections 7 and 35 of the Court of Wards Act, IX (B.C.) of 1879, as amended up to date, the Court of Wards has assumed charge of the property of Srimati Pramila Bala Devi, Miss Hriday Bala Chowdhury, Miss Sukrity Bala Chowdhury and Miss Suprity Bala Chowdhury.

Notice is hereby given under section 10A of the said Act that all creditors having claims against the said Pramila Bala Devi, Hriday Bala Chowdhury, Sukrity Bala Chowdhury and Suprity Bala Chowdhury or their immovable property are hereby required to submit the same in writing to the Collector of Chittagong at his office at Chittagong within six months from the date of publication of this notice.

Creditors are also hereby warned that claims not submitted as required by this notice, are liable to be deemed to have been duly discharged/ceased to carry interest.

A. H. KEMM, Collector.

Chittagong, the 24th August 1931. (1791—3)

Notice to Creditors.

Estate Sir David Wilson, bt., deceased.

NOTICE is hereby given that the creditors and all persons interested in the estate of Sir David Wilson, Baronet, late of Carbeth, Killearn, County of Stirling, Scotland, who died at that address on or about the 8th March 1930, are hereby required to submit particulars of their claims to the undersigned, on or before the 20th October 1931, after which date the assets of the estate will be distributed, regard only being had to the claims of which notice shall then have been received. All persons indebted to the estate are requested to make payment of their respective debts without delay.

ORR, DIGNAM & Co.,

Solicitors to the Administrator abovenamed.

32, Dalhousie Square, South, Calcutta, the 3rd September 1931.

(1845—1—1883)

Currency Notes.

PORTIONS of the following Currency Notes of the Calcutta Circle of issue are stated to have been destroyed and payment of their value has been claimed by the person whose name is shown against the numbers.

Any other person claiming a right to them is warned to communicate at once with the undersigned:—

Regd. No.	Note No.	Value. Rs.	Name and address of the claimant.
W.D. 11 of 31-32.	S/64, 444337	100	Kiron Chandra Mukherjee, 1, Ghoshpara Lane, Salkhia, Howrah.
	S/64, 444338	100	
	S/44, 989127	100	

B. C. DUTT, Currency Officer.

Currency Office, Calcutta, the 22nd August 1931.

Currency Note.

A PORTION of the following Currency Note of the Calcutta Circle of issue is stated to have been destroyed and payment of its value has been claimed by the person whose name is shown against the number.

Any other person claiming a right to it is warned to communicate at once with the undersigned—

Regd. No.	Note No.	Value. Rs.	Name and address of the claimant.
W.D. 12 of 31-32.	S/19,829028	100	Patel Javerbhai Vaghajibhai c/o Bhagwandas Zaverdas Shah, Sojitra (*via* Petlad), district Baroda.

B. C. DUTT, Currency Officer.

Currency Office, Calcutta, the 27th August 1931.

Currency Note.

A PORTION of the following Currency Note of the Calcutta circle of issue is stated to have been destroyed and payment of its value has been claimed by the person whose name is shown against the number.

Any other person claiming a right to it is warned to communicate at once with the undersigned.

Registered No.	Note No.	Value.	Name and address of the claimant.
		Rs.	
W.D. 13 of 31-32.	S-64,138826	100	Matilall Basu, 21, Balaram Mazumder Street, Calcutta.

B. C. DUTT, Currency Officer.

Currency Office, Calcutta, the 9th September 1931.

Currency Notes.

PORTIONS of the following Currency Notes of the Calcutta circle of issue are stated to have been destroyed and payment of their value has been claimed by the person whose name is shown against the numbers.

Any other person claiming a right to them is warned to communicate at once with the undersigned.

Registered No.	Notes No.	Value.	Name and address of the claimant.
		Rs.	
WD. 14 of 31-32.	S-29,503372	100	Ambica Charan Banerjee, village Patkelghatta, post-office Kumira, district Khulna.
	S-36,680896	100	
	S-43,013642	100	
	S-41,388111	100	
	S-36,959040	100	

B. C. DUTT, Currency Officer.

Currency Office, Calcutta, the 9th September 1931.

Anglo-India Jute Mills Company, Limited.

NOTICE TO DEBENTURE-HOLDERS.

In the matter of the Indian Companies Acts, 1913-1920, and

In the matter of a Debenture Trust Deed, dated the 29th January 1917.

THE holders of the Company's 2,500 debentures of Rs. 1,000 each for the aggregate nominal value of Rs. 25,00,000 carrying interest at 5½ per cent. per annum are reminded that the same fall due for repayment on the 1st January 1932. The debenture-holders are accordingly requested to send in their respective debentures to the undersigned on or before the 15th day of December 1931 with instructions as to the disposal of the amounts due thereunder.

Debenture-holders are reminded that if they fail to send in their debentures for payment no further interest after the said 1st January 1932 will become payable.

DUNCAN BROTHERS & Co., LTD.,
Managing Agents.

101, Clive Street, Calcutta, the 17th September 1931.

(1851—1—1903)

Imperial Library.

(Secretariat Buildings, 6, Esplanade East, Calcutta.)
Open on—

Weekdays and Saturdays from 10 A.M. to 7 P.M.
Sundays and Gazetted holidays from 2 P.M. to 5 P.M.

THE Imperial Library is also a Lending Library. It is free to all except children. There is no subscription to pay.

K. M. ASADULLAH, Librarian.

Descriptive Catalogue of Sanskrit Manuscripts.

PARTS I, II and III of a Descriptive Catalogue of the Sanskrit Manuscripts in the Library of the Calcutta Sanskrit College, prepared by Pandit Hrishikesh Sastri and Babu Siva Chandra Gui, M.A., B.L., of that College, are offered to the public for sale. The Catalogue having to be completed in 23 parts the price of each part is 12 annas a copy exclusive of postage. Copies can be obtained from the Principal of the Sanskrit College, Calcutta.

CINCHONA FACTORY PRODUCTS.

By order of the Government of Bengal Cinchona Factory Products as manufactured and packed at the Cinchona Factory, Mungpoo, Darjeeling district, will be sold and distributed by the Superintendent of the **Presidency Jail**, *in original packages* as received from the Mungpoo Factory, at the rates herein noted **from the 1st May 1926** :—

Quinine Sulphate.

For 60 lbs. and upwards at a time	..	Rs. 18 per lb.
For 6 lbs. and over but less than 60 lbs. at a time	..	„ 19 „
For any quantity less than 6 lbs.	..	„ 20 „

Quinine Hydrochloride.

For 60 lbs. and upwards at a time	..	Rs. 23 per lb.
For 6 lbs. and over but less than 60 lbs. at a time	..	„ 24 „
For any quantity less than 6 lbs.	..	„ 25 „

Quinine Di-Hydrochloride.

For 60 lbs. and upwards at a time	..	Rs. 25 per lb.
For 6 lbs. and over but less than 60 lbs. at a time	..	„ 26 „
For any quantity less than 6 lbs.	..	„ 27 „

Quinidine Sulphate.

For 60 lbs. and upwards at a time	..	Rs. 20 per lb
For 6 lbs. and over but less than 60 lbs. at a time	..	„ 21 „
For any quantity less than 6 lbs.	..	„ 22 „

Cinchonidine Sulphate.

For 60 lbs. and upwards at a time	..	Rs. 25 per lb.
For 6 lbs. and over but less than 60 lbs. at a time	..	„ 26 „
For any quantity less than 6 lbs.	..	„ 27 „

Cinchonine Sulphate.

For 60 lbs. and upwards at a time	..	Rs. 12 per lb.
For 6 lbs. and over but less than 60 lbs. at a time	..	„ 13 „
For any quantity less than 6 lbs.	..	„ 14 „

Cinchona Febrifuge (Powder).

For 60 lbs. and upwards at a time	..	Rs. 9 per lb.
For 6 lbs. and over but less than 60 lbs. at a time	..	„ 9 „
For any quantity less than 6 lbs.	..	„ 10 „

Cinchona Febrifuge (Tablets).

For 60 lbs. and upwards at a time	..	Rs. 10 per lb.
For 6 lbs. and over but less than 60 lbs. at a time	..	„ 10 „
For any quantity less than 6 lbs.	..	„ 11 „

Quinoidine (Tablets).

For 60 lbs. and upwards at a time	..	Rs. 5 per lb.
For 6 lbs. and over but less than 60 lbs. at a time	..	„ 5 „
For any quantity less than 6 lbs.	..	„ 6 „

Quinoidine (in Mass).

For 60 lbs. and upwards at a time .. Rs. 4 per lb.
For 6 lbs. and over but less than 60 lbs. at a time .. .. .. „ 4 „
For any quantity less than 6 lbs. .. „ 5 „

Cinchona Bark (in 50 pound original bags).

Per bag .. .. .. Rs 25.

Quinine Tablets per box of 200 tablets each. Rs. 2-8 (Bengal) Rs. 3 (outside Bengal).

Rs. 15-8-0 per lb.

Transit charges extra in every case.

Quinine Sulphate is for sale to Government Institutions and Missionaries only. It is not for sale to Private Firms or the General Public.

Cinchona Febrifuge in Powder and Tablet form (when in stock) is for sale to Government Institutions, Missionaries and the General Public.

Quinine Sulphate will be supplied to Hospitals and Dispensaries of this Presidency only at the wholesale rate of Rs. 18 per lb., irrespective of quantities. For all other purchasers the rates given above will apply.

Five and ten boxes of Quinine Tablets are sold to the public at the concession rates which will be intimated on application.

Provinces other than Bengal, Bihar and Orissa and Assam will get their supplies of Sulph. Quinine from the Director, Botanical Survey of India, Sibpur, Howrah.

Local sale at the jail gate from 10 to 12 noon.

The system of payment is by—*Cash in advance*—by "*Treasury Challans*," which should accompany the order or indent.

In cases where this is not possible, payment should be made by "*Remittance Transfer Receipts*" or crossed "*Cheques.*"

Indents unaccompanied by cash in advance will be sent Value Payable Post. Credit sale is not allowed except under special circumstances.

In the case of *Government officers* payments will be recovered by *Book Transfer*, i.e., *Countersigned Invoices*, in the event of *Cash* not accompanying the indent by "*Treasury Challans*," *Remittance Transfer Receipt* or *Cheque.*

2. Price and postage must accompany the price of the drug (when the drug is required by post).

The name of the Railway and Steamer Station or Post Office must be written distinctly when the parcels are required by Rail, Steamer or by Post. Railway parcels are sent by passenger train only.

A scale of postage is given below.

	1 oz.	2 oz.	4 oz.	½ lb.	¾ lb.	1 lb.
	As.	As.	As.	As.	As.	Rs. A.
Quinine Sulph. ..	..	..	6	6	10	0 10
Cinchona Feb. ..	..	..	6	6	10	0 10
Cinchona Feb. Tablets	..	..	6	6	10	0 10
Quinoidine Tablets ..	..	..	..	..	..	1 2
Quinine Hydrochlor. ..	4	4	6	6	..	0 10
Quinine Di-hydrochlor.	4	4	6	6	..	0 10
Quinine Tablets ..	..	..	6	6	10	0 10

	1¼ lb.	2 lb.	3 lb.	4 lb.	5 lb.	6 lb.
	Rs. A.	Rs. A.	Rs. A.	Rs. A.	Rs. A.	Rs. A.
Quinine Sulph. ..	0 14	1 2	1 6	1 14	2 6	2 14
Cinchona Feb. ..	0 14	0 14	1 6	1 10	1 14	2 6
Cinchona Feb. Tablets	1 2	1 2	1 10	1 14	2 6	2 14
Quinoidine Tablets ..	..	2 2	3 2	..	..	..
Quinine Hydrochlor. ..	1 0	0 14	1 6	1 10	..	..
Quinine Di-hydrochlor.	1 0	1 2	1 12	2 4	..	..
Quinine Tablets ..	0 14	0 14	1 6	1 10	1 14	2 2

Two different drugs are not packed in the same parcel and postage must be paid separately for each kind.

N.B.—Postage stamps are not accepted as revenue.

Government reserve the right to alter the price without notice.

Registered No. C207 *No. 38 of 1931*

The Calcutta Gazette

THURSDAY, SEPTEMBER 17, 1931.

CONTENTS:

	PAGE.		PAGE.
Statement under the Cotton Ginning and Pressing Factories Act, 1925 ..	1175	Prices-current (wholesale) of certain articles in the Calcutta Mart and (retail) of common rice and salt in the districts of Bengal for the second-half of August 1931	1191—1194
Statement showing water-levels in the rivers for the month of December 1930 ..	1176—1177	Statement showing the daily gauge-readings of certain rivers for the week ending 3rd September 1931	1195—1201
Return of Vital Statistics for the month of March 1931	1178—1183	Statements of weekly gauge readings of certain rivers in Bengal	1202
Vital Statistics for the towns of Bengal for the weeks ending 29th August and 5th September 1931	1184—1185	Corporation of Calcutta Notice ..	1202
Area leased for irrigation up to end of June 1931	1186	Abstract of audited accounts of the University of Dacca for 1928-29 and 1929-30 ..	1203- 1204
Weather and Crop Report for the week ending 9th September 1931	1187—1190		

Supplement.

Official Papers.

FORM C—BENGAL.

STATEMENT OF COTTON PRESSED IN THE BENGAL PRESIDENCY FOR THE WEEK ENDING 4th SEPTEMBER 1931.

[Section 5(2) of the Cotton Ginning and Pressing Factories Act, 1925.]

Name of Division or block.	Number of bales pressed.				District included in the block.
	During the week.	During the corresponding week, last year.	Since 1st September 1930 (the date prescribed by the Local Government as the commencement of the season).	During the corresponding period, last year.	
The Bengal Presidency	*422 or 420·06 bales of 400 lbs. each.	..	*35,547	33,286	All districts in the Presidency.

* Includes 21 bales of 400 lbs. each pressed between 1st and 4th September 1931.

J. B. McBRIDE,

Chief Inspector of Factories, Bengal (offg.).

IRRIGATION DEPARTMENT.

Statement showing heights above P. W. D. datum and low water in the rivers Ganges, Bhagirathi, Jalangi P. W. D. datum as well as the

River Ganges.

Date.	Mirzapur. Zero of gauge is 200·00 ft. above P. W. D. datum.		Benares. Zero of gauge is 197·05 ft. above P. W. D. datum.		Buxar.* Zero of gauge is 169·91 ft. above Bengal P. W. D. datum.		Dinapore. Zero of gauge is 135·51 ft. above P. W. D. datum.		Monghyr. Zero of gauge is at P. W. D. datum.	
	Distance in miles.	From Allahabad, 66.	From Allahabad, 134.	From Mirzapur, 43.	From Benares, 90.		From Benares, 177.	From Buxar, 87.	From Benares, 287.	From Dinapore, 110.
	Highest gauge reading.	2nd September 1916. 265·97 ft.	2nd September 1916. 244·55 ft.		7th September 1919. 203·40 ft.		21st August 1923. 172·41 ft.		8th September 1901. 129·60 ft.	
	Lowest gauge reading.	11th April 1878. 198·92 ft.	20th May 1879. 191 70 ft.		15th May 1914. 161 65 ft.		26th April 1902. 136·11 ft.		2nd May 1914. 95·75 ft.	
		Height above zero of gauge.	Height above P. W. D. datum.	Height above zero of gauge.	Height above P. W. D. datum.	Height above zero of gauge.	Height above P. W. D. datum.	Height above zero of gauge.	Height above P. W. D. datum.	Height above zero of gauge.	Height above P.W.D. datum.
1	2	3	4	5	6	7	8	9	10	11	12
1st ..	..	14·58	214·58	1·75	198·05	5·17	175·08	12·60	148·11	104·20	104·20
2nd ..	..	14·50	214·50	1·67	198·72	5·08	174·99	12·60	148·11	104·00	104·00
3rd ..	..	14·42	214·42	1·67	198·72	5·00	174·91	12·60	148·11	103·80	103·80
4th ..	..	14·00	214·00	1·67	198·72	5·00	174·91	12·60	148·11	103·80	103·80
5th ..	..	13·92	213·92	1·42	198·47	4·92	174·83	12·60	148·11	103·70	103·70
6th ..	..	13·83	213·83	1·17	198·22	4·75	174·66	12·60	148·11	103 40	103·40
7th ..	..	13·75	213·75	1·00	198·05	4·75	174·66	12·50	148·01	103·20	103 20
8th ..	..	13·75	213·75	0·83	197·88	4·58	174·49	12·50	148·01	102·80	102·80
9th ..	..	13·67	213·67	0·67	197·72	4·58	174·49	12·50	148·01	102·70	102·70
10th ..	..	13·58	213·58	0·67	197·72	4·50	174·41	12·50	148·01	102·60	102·60
11th ..	..	13·50	213·50	0·50	197·55	4·50	174·41	12·50	148·01	102·40	102·40
12th ..	..	13·50	213·50	0·50	197·55	4·33	174·24	12·40	147·91	102·30	102·30
13th ..	..	13·42	213·42	0·50	197·55	4·33	174·24	12·40	147·91	103·20	103·20
14th ..	..	13·33	213·33	0·25	197·30	4·17	174·07	12·40	147·91	102·00	102·00
15th ..	..	13·33	213·33	0·17	197·22	4·17	174·07	12·40	147·91	101·80	101·80
16th ..	..	13·25	213·25	0·08	197·14	4·17	174·07	12·40	147·91	101·80	101·80
17th ..	..	13·17	213·17	0·00	197·05	4·17	174 07	12·40	147·91	101·80	101·80
18th ..	..	13·17	213·17	0·00	197·05	4·17	174·07	12·40	147·91	101·70	101·80
19th ..	..	13·17	213·17	0·00	197·05	4·08	173·99	12·40	147·91	101·60	101·60
20th ..	..	13·09	213·09	0·00	197·05	4·08	173·99	12·40	147·91	101·40	101·40
21st ..	..	13·09	213·09	Below zero 0·08	196·97	4·00	173·91	12·40	147·91	101·30	101·30
22nd ..	..	13·00	213·00	0·08	196·97	4·00	173·91	12·40	147·91	101·20	101·20
23rd ..	..	13·00	213·00	0·17	196·89	4·00	173·91	12·30	147·81	101·20	101·20
24th ..	..	12·92	212·92	0·17	196·89	4·00	173·91	12·30	147·81	101·10	101·10
25th ..	..	12·92	212·92	0·25	196·80	4·00	173·91	12·30	147·81	101·00	101·00
26th ..	..	12·83	212·83	0·25	196·80	3·92	173·83	12·30	147·81	100·90	100·90
27th ..	..	12·83	212·83	0·25	196·80	3·92	173·83	12·20	147·71	100·80	100·80
28th ..	..	12·75	212·75	0·33	196·72	3·92	173·83	12·20	147·71	100·80	100·80
29th ..	..	12·75	212·75	0·33	196·72	3·83	173·74	12·20	147·71	100·70	100·70
30th ..	..	12·83	212·83	0·42	196·63	3·83	173·74	12·20	147·71	100·70	100·70
31st ..	..	12·83	212·83	0·42	196·63	3·83	173·74	12·20	147·71	100·60	100·60
Average Level ..	..	13·38	213·38	·54	197·59	4·31	174·22	12·41	147·92	102·08	102·08

NOTE.—Since the 1st January 1929 the datum of all gauges has been finally altered to refer to the Bengal Public Works Department datum which is to be applied to all reduced levels recorded since each gauge was established have been prepared.

* The zero of the Buxar gauge has been checked from the G. T. S. Bench marks Nos. 125 and 126 on line 70K and found to be 169·91 feet above

BENGAL.

and Brahmaputra for the month of December 1930, and the highest reading of each gauge above lowest gauge reading since 1876.

Rajmahal. Zero of gauge is at P. W. D. datum.		Rampur-Boalia. Zero of gauge is at P. W. D. datum.		Goalundo. Zero of gauge is 1·409 ft. above Bengal P. W. D. datum.		River Bhagirathi. Berhampore. Zero of gauge is at P. W. D. datum.		River Jalangi. Sarupganj. Zero of gauge is at P. W. D. datum.		River Brahmaputra. Gauhati. Zero of gauge is 136·958 ft. above P. W. D. datum.	
From Benares, 407.	From Monghyr, 120.	From Benares, 471.	From Rajmahal, 64.	From Benares, 591.	From Rampur-Boalia, 120.						
15th August 1913. 90·37 ft.		26th August 1879. 62·24 ft.		23rd August 1924. 28·21 ft.		14th August 1890. 63·46 ft.		25th September 1900. 35·30 ft.		24th August 1906. 169·25 ft.	
12th May 1916. 55·46 ft.		25th April 1884. 32·62 ft.		8th February 1914. 2·41 ft.		26th May 1884. 32·00 ft.		7th May 1896. 2·11 ft.		9th February 1888. 129·23 ft.	
Height above zero of gauge.	Height above P. W. D. datum.	Height above zero of gauge.	Height above P. W. D. datum.	Height above zero of gauge.	Height above P. W. D. datum.	Height above zero of gauge.	Height above P. W. D. datum.	Height above zero of gauge.	Height above P.W.D. datum.	Height above zero of gauge.	Height above P. W. D. datum.
13	14	15	16	17	18	19	20	21	22	23	24
63·90	63·90	40·55	40·55	15·40	16·809	36·30	36·30	8·15	8·15	2·60	139·558
63·75	63·75	40·25	40·25	15·20	16·609	36·15	36·15	8·19	8·19	2·40	139·358
63·55	63·55	40·00	40·00	15·20	16·609	36·05	36·05	8·10	8·10	2·20	139·158
63·40	63·40	39·80	39·80	14·80	16·209	35·95	35·95	7·97	7·97	2·00	138·958
63·25	63·25	39·60	39·60	14·70	16·109	35·85	35·85	7·89	7·89	1·80	138·758
63·10	63·10	39·40	39·40	14·40	15·809	35·80	35·80	7·75	7·75	0·90	137·858
		Value of zero 32·20									
63·00	63·00	7·00	39·20	14·20	15·609	35·75	35·75	7·34	7·34	0·50	137·458
62·85	62·85	6·80	39·00	14·20	15·609	35·70	35·70	7·23	7·23	0·20	137·158
62·70	62·70	6·65	38·85	14·10	15·509	35·65	35·65	6·92	6·92	0·20	137·158
62·70	62·70	6·50	38·70	13·90	15·309	35·60	35·60	6·74	6·74	0·10	137·058
62·60	62·60	6·35	38·55	13·70	15·109	35·60	35·60	6·59	6·59	0·10	137·058
62·40	62·40	6·20	38·40	13·50	14·909	35·55	35·55	6·38	6·38	0·00	136·958
										Below Zero.	
62·15	62·15	6·10	38·30	13·30	14·709	35·55	35·55	6·28	6·28	1·80	135·158
62·00	62·00	5·95	38·15	13·10	14·509	35·55	35·55	6·14	6·14	1·50	135·458
61·85	61·85	5·85	38·05	13·10	14·509	35·50	35·50	6·12	6·12	4·00	131·958
61·80	61·80	5·70	37·90	13·00	14·409	35·45	35·45	6·18	6·18	2·70	134·258
61·80	61·80	5·60	37·80	12·90	14·309	35·45	35·45	6·15	6·15	0·80	136·158
61·75	61·75	5·50	37·70	12·80	14·209	35·45	35·45	6·12	6·12	1·20	135·158
61·70	61·70	5·40	37·60	12·70	14·109	35·40	35·40	6·10	6·10	1·70	135·258
61·60	61·60	5·30	37·50	12·70	14·109	35·40	35·40	5·84	5·84	1·90	135·058
61·55	61·55	5·20	37·40	12·60	14·009	35·40	35·40	5·67	5·67	2·20	134·758
61·25	61·25	5·10	37·30	12·40	13·809	35·40	35·40	5·56	5·56	2·30	134·658
61·15	61·15	5·00	37·20	12·30	13·709	35·35	35·35	5·60	5·60	2·50	134·458
61·00	61·00	4·90	37·10	12·20	13·609	35·35	35·35	5·52	5·52	2·50	134·458
60·90	60·90	4·80	37·00	12·10	13·509	35·35	35·35	5·47	5·47	2·70	134·258
60·80	60·80	4·70	36·90	12·00	13·409	35·35	35·35	5·42	5·42	2·80	134·158
60·75	60·75	4·60	36·80	11·90	13·309	35·30	35·30	5·36	5·36	3·00	133·958
60·70	60·70	4·55	36·75	12·00	13·409	35·30	35·30	5·28	5·28	3·00	133·958
60·65	60·65	4·50	36·70	11·60	13·009	35·30	35·30	5·23	5·23	3·10	133·858
60·60	60·60	4·45	36·65	11·40	12·809	35·25	35·25	5·17	5·17	3·20	133·758
60·55	60·55	4·35	36·55	11·30	12.709	35·25	35·25	5·15	5·15	3·20	133·758
61·99	61·99	5·92	38·12	13·18	14·509	35·56	35·56	6·37	6·37	-1·07	135·888

6·25 feet above the Kidderpore Old Dock Sill. The values of the highest and lowest readings have similarly been altered. Printed notes on the correction the Bengal P. W. D. datum.

S. N. BANARJI, *Chief Engineer, Government of Bengal, Irrigation Department.*

Vital Statistics for the month of March 1931 of the

Districts.	No.	Towns.	Population under registration according to census of 1921.			Births registered		Deaths							
			Male.	Female.	Total.	Number registered (excluding still-births).	Still born number registered.	Cholera.	Small-pox.	Plague.	Malaria.	Enteric fever.	Measles.	Relapsing fever	Kala-azar.
Burdwan ..	1	Burdwan..	19,583	15,033	34,616	66	..	2	..	..	5	..	..	..	..
	2	Raniganj..	8,040	6,496	14,536	25	3	1	..	..	2	..	..	..	..
	3	Asansol ..	15,464	11,035	26,499	41	..	1	..	..	..	..	..	..	..
Bankura ..	4	Bankura ..	13,523	11,889	25,412	39	..	2	..	..	4	..	..	..	..
	5	Vishnupur	9,736	9,662	19,398	26	2	..	20	..	..	..	..	..	..
	6	Sonamukhi	5,140	5,504	10,644	18	1	4	4	..	3	..	..	..	..
Midnapur ..	7	Midnapur	15,724	13,241	28,965	52	..	..	..	..	1	..	..	..	..
	8	Ghatal ..	5,655	5,115	10,770	40	..	..	..	..	..	..	..	..	..
Hooghly ..	9	Hooghly-Chinsura	16,723	13,215	29,938	74	..	5	4	..	4	1	1	..	..
	10	Serampur	20,210	12,987	33,197	61	..	14	2	..	..	..	..	..	..
	11	Rishra-Konnagar	15 080	8,220	23,259	43	1	17	10	..	..	1	1	..	..
	12	Baidyabati	9,174	7,297	16,471	39	..	13	3	..	1	..	..	..	..
	13	Bhadreswar	14,487	7,594	22,081	42	..	..	..	..	..	..	..	..	..
	14	Champdani	17,193	7,459	24,652	42	..	3	1	..	..	..	..	..	..
Howrah ..	15	Howrah ..	128,472	66,829	195,301	402	27	29	172	..	2	23	..	..	2
	16	Bally ..	15,264	7,945	23,209	38	..	5	2	..	1	..	..	..	..
24 Parganas	17	South Suburban.	19,083	14,262	33,345	92	1	14	..	..	4	2	1	..	1
	18	Tollyganj..	13,826	8,811	21,637	56	..	4	3	..	1	..	..	..	..
	19	Budge-Budge.	17,883	7,840	25,723	14	..	5	..	..	..	..	..	..	..
	20	Baranagar	19,989	12,095	32,084	73	1	7	..	..	..	5	..	..	..
	21	Kamarhati	14,965	8,053	23,018	32	..	4	2	..	3	..	..	..	2
	22	Rajpur ..	5,760	5,652	11,412	29	2	1	..	..	..	..	..	..	..
	23	South Dum-Dum	8,736	5,294	14,030	38	..	2	4	..	1	..	1	..	..
	24	Barrackpur	14,877	7,583	22,460	20	..	3	1	..	1	..	..	..	..
	25	Panihati ..	6,148	4,013	10,161	28	1	2	..	..	1	..	..	..	1
	26	North Barrackpur	9,452	5,981	15,433	40	1	6	..	..	1	..	..	..	..
	27	Titagarh .	36,533	15,918	52,451	66	4	..	..	..	..	..	..	..	..
	28	Garulia ..	9,077	4,019	13,096	12	..	1	..	..	..	..	..	..	..
	29	Naihati ..	15,464	7,822	23,286	28	..	1	3	..	..	..	..	..	..
	30	Kanchrapara.	7,182	3,150	10,332	26	..	..	..	..	..	..	..	..	..
	31	Bhatpara	45,723	19,886	65,609	104	3	9	10	..	..	..	1	..	..
	32	Basirhat ..	10,162	9,105	19,267	69	..	12	..	..	4	..	..	..	1
	33	Baduria ..	7,434	6,623	14,057	42	..	3	..	..	..	..	..	..	..
Calcutta ..	34	Calcutta ..	724,248	353,016	1,077,264	1,905	152	265	219	..	69	57	18	..	27
Nadia ..	35	Krishnagar	11,377	10,932	22,309	24	..	..	..	..	..	..	..	..	..
	36	Nabadwip	7,291	8,293	15,584	29	3	15	..	..	..	..	..	..	..
	37	Santipur ..	11,342	13,450	24,792	50	1	23	..	..	6	..	..	..	..

towns with a population of 10,000 and over in Bengal.

registered.

Other fevers.	Dysentery.	Diarrhœa.	Influenza.	Pneumonia.	Phthisis.	Other respiratory diseases.	Injuries including suicide.	Deaths from child-birth.	Other causes.	Total of all causes.			Total of corresponding month of previous year.			No.	Towns.
										Male.	Female.	Total.	Male.	Female.	Total.		
..	6	2	..	6	..	8	3	..	10	26	16	42	22	12	34	1	Burdwan.
4	1	1	..	..	..	3	..	..	15	16	11	27	32	13	45	2	Raniganj.
..	..	..	..	..	..	..	1	..	15	11	6	17	25	10	44	3	Asansol.
..	5	..	..	1	..	3	..	1	11	16	11	27	12	8	20	4	Bankura.
14	3	3	..	3	..	3	..	1	8	37	18	55	24	20	44	5	Vishnupur.
1	..	2	..	..	..	1	..	1	11	11	16	27	22	9	31	6	Sonamukhi.
1	..	..	..	2	..	1	1	..	5	7	4	11	18	13	31	7	Midnapur.
4	..	1	..	1	..	5	..	..	5	14	2	16	12	11	23	8	Ghatal.
9	..	3	..	..	..	2	3	..	29	31	30	61	41	21	62	9	Hooghly-Chinsura.
1	5	10	..	4	2	..	4	..	12	31	23	54	30	16	46	10	Serampur.
..	..	1	..	..	2	2	..	..	7	24	17	41	15	12	27	11	Rishra-Konnagar.
3	2	1	..	..	1	2	..	..	9	17	18	35	5	8	18	12	Baidyabati.
3	3	4	..	1	..	..	..	..	9	11	9	20	21	23	44	13	Bhadreswar.
..	..	..	..	..	..	..	1	..	5	5	5	10	9	7	16	14	Champdani.
1	52	27	..	75	27	61	9	5	157	338	304	642	286	247	533	15	Howrah.
5	2	..	..	7	..	1	..	..	2	15	10	25	17	7	24	16	Bally.
2	2	9	..	7	4	5	3	1	16	30	41	71	27	34	61	17	South Suburban.
3	1	..	..	..	..	..	..	..	9	6	15	21	19	10	29	18	Tollyganj.
5	8	4	..	1	..	1	1	..	4	17	12	29	25	20	45	19	Budge-Budge.
4	7	1	..	8	..	5	1	..	9	23	24	47	29	30	59	20	Baranagar.
6	2	2	..	2	2	1	..	..	2	14	14	28	13	7	20	21	Kamarhati.
..	..	2	..	4	1	1	..	..	4	9	4	13	5	9	14	22	Rajpur.
2	1	..	..	1	..	2	..	..	6	8	12	20	8	11	19	23	South Dum-Dum.
3	..	..	..	..	1	1	..	..	1	7	4	11	13	4	17	24	Barrackpur.
1	..	1	..	3	..	..	..	..	4	8	5	13	8	3	11	25	Panihati.
..	..	1	..	..	..	..	..	..	5	5	8	13	10	10	20	26	North Barrackpur.
44	..	..	..	..	1	1	..	1	3	26	24	50	65	51	116	27	Titagarh.
1	..	2	..	..	..	..	..	..	4	3	5	8	7	2	9	28	Garulia.
4	..	..	..	5	2	..	..	..	4	14	5	19	15	9	24	29	Naihati.
5	..	1	..	..	1	..	..	1	..	5	3	8	6	7	13	30	Kanchrapara.
29	..	5	..	4	1	1	1	1	11	42	31	73	53	43	96	31	Bhatpara.
3	1	1	..	4	..	1	1	..	6	15	19	34	13	12	25	32	Basirhat.
7	1	1	..	2	..	1	1	..	..	6	10	16	9	4	13	33	Baduria.
120	143	138	24	322	261	208	58	2	902	1,572	1,261	2,833	1,710	1,367	3,077	34	Calcutta.
7	..	..	..	..	..	4	..	..	7	10	8	18	11	8	19	35	Krishnagar.
4	2	1	..	..	1	..	..	..	7	12	18	30	7	9	16	36	Nabadwip.
6	1	..	..	4	2	..	..	2	17	33	28	61	18	23	41	37	Santipur.

Vital Statistics for the month of March 1931 of the

Districts	No	Towns	Population under registration according to census of 1921.			Births registered		Deaths							
			Male	Female.	Total	Number registered (excluding still-births).	Still-born number registered.	Cholera.	Small-pox.	Plague	Malaria	Enteric fever	Measles.	Relapsing fever.	Kala-azar
Murshidabad	38	Berhampur	14,719	11,951	26,670	34	..	..	..	..	6	1	..	..	1
	39	Murshidabad	5,401	5,268	10,669	22	2	..	..	..	.	..	..	..	..
	40	Jiaganj-Azimganj	5,876	5,355	11,231	18	..	..	..	..	8	..	..	..	..
	41	Kandi ..	5,903	5,884	11,787	30	1	1	..	..	1	..	..	..	..
	42	Jangipur .	5,167	5,572	10,739	45	..	..	..	..	..	..	..	..	..
Jessore ..	43	Jessore ..	6,410	3,729	10,139	12	..	1	..	..	2	..	..	..	1
Khulna ..	44	Khulna ..	10,235	5,814	16,049	21	..	..	1	..	3	..	..	..	..
	45	Satkhira ..	5,548	4,751	10,299	18	..	..	..	..	1	..	..	..	1
Rajshahi ..	46	Rajshahi	13,831	10,767	24,598	61	..	..	..	..	3	1	..	..	..
Dinajpur ..	47	Dinajpur	10,973	7,052	18,025	14	..	..	..	..	1	..	..	..	..
Jalpaiguri	48	Jalpaiguri	8,965	5,555	14,520	32	..	..	..	..	6	..	..	..	3
Darjeeling..	49	Darjeeling	12,877	9,381	22,258	72	3	..	..	..	6	1	..	..	1
Rangpur ..	50	Rangpur .	12,059	7,017	19,076	18	..	..	..	..	..	..	..	..	..
Bogra ..	51	Bogra ..	7,257	5,065	12,322	3	..	..	..	..	..	..	..	..	..
Pabna ..	52	Pabna ..	10,352	8,991	19,343	9	2	..	..	..	..	..	..	..	..
	53	Sirajganj	13,756	11,762	25,518	54	..	5	..	..	..	..	..	..	..
Malda ..	54	English Bazar.	7,869	6,188	14,057	35	..	2	..	..	4	..	..	..	1
	55	Nawabganj	6,081	6,552	12,633	50	..	..	..	..	1	..	..	..	2
Dacca ..	56	Dacca ..	67,333	52,117	119,450	329	15	10	1	..	..	..	6	..	8
	57	Narayanganj	19,442	11,160	30,602	117	2	9	..	..	1	..	..	..	..
Mymensingh	58	Mymensingh	16,597	8,690	25,287	39	1	..	..	..	..	..	..	..	..
	59	Jamalpur	12,566	10,547	23,113	57	..	..	..	..	..	..	..	..	1
	60	Sherpur ..	9,768	8,045	17,813	67	..	2	..	..	..	..	..	..	..
	61	Kishorganj	10,600	8,918	19,518	22	..	..	..	..	..	..	..	..	..
	62	Bajitpur ..	5,946	5,622	11,568	14	..	..	..	..	..	..	1	..	..
	63	Tangail .	7,542	6,763	14,305	34	..	..	..	..	1	..	..	..	..
Faridpur ..	64	Faridpur	8,772	5,731	14,503	33	..	3	..	..	4	..	..	..	..
	65	Madaripur	14,309	10,988	25,297	60	..	21	..	..	..	..	..	..	..
Bakarganj	66	Barisal ..	17,584	9,160	26,744	41	..	5	..	..	..	..	..	..	..
	67	Pirojpur ..	7,515	6,326	13,841	55	..	1	..	..	..	..	..	..	1
Chittagong	68	Chittagong	24,117	11,913	36,030	67	1	9	..	..	..	..	..	..	1
Tippera ..	69	Comilla ..	15,533	10,381	25,914	37	..	..	..	..	..	..	1	..	..
	70	Brahmanbaria	12,367	11,047	23,414	107	2	..	..	..	..	..	..	..	..
	71	Chandpur	10,636	4,482	15,118	16	..	4	..	..	..	..	..	..	1
		Total of month	1,769,376	1,049,372	2,818,748	5,462	232	540	462	..	162	92	31	..	56
		Total of corresponding month of previous year ..	..	..	..	4,516	193	467	660	..	192	87	39	2	48
		Increase+ or decrease−	..	..	..	+946	+39	+79	−198	..	−30	+5	−8	−2	+8

REMARKS.—1. The above table is compiled from returns collected by the municipalities and submitted to the Director of Public Health by the approximate to the actual in a proportion of cases and in a few instances are obviously incomplete

2. The vital statistics of municipalities with a population of less than 10,000 have been excluded from this statement and 1918.

3. The birth and death ratios per mille per annum have been omitted from this statement according to Government of India,

CALCUTTA, *the 9th September 1931.*

towns with a population of 10,000 and over in Bengal.

registered.

Other fevers.	Dysentery.	Diarrhœa.	Influenza.	Pneumonia.	Phthisis.	Other respiratory diseases.	Injuries including suicide.	Deaths from child-birth.	Other causes.	Total of all causes.			Total of corresponding month of previous year.			No.	Towns
										Male.	Female.	Total.	Male.	Female.	Total.		
14	5	..	..	1	2	2	..	..	9	24	17	41	37	19	56	38	Berhampur.
6	1	..	..	1	..	..	..	..	1	4	5	9	11	5	16	39	Murahida-bad.
..	1	..	..	..	2	..	..	..	3	10	4	14	10	5	15	40	Jiaganj-Azimganj.
2	1	..	..	..	..	6	1	..	3	10	5	15	11	7	18	41	Kandi.
8	2	..	..	1	..	..	..	..	..	8	3	11	4	8	12	42	Jangipur.
..	..	1	..	1	..	1	1	..	..	5	3	8	12	10	22	43	Jessore.
5	1	1	..	..	..	..	..	..	3	9	5	14	8	7	15	44	Khulna.
4	1	2	..	..	..	..	..	..	3	7	5	12	9	10	19	45	Satkhira.
1	3	..	..	7	1	..	2	..	13	20	11	31	6	16	22	46	Rajshahi.
3	..	..	..	4	..	..	2	..	4	9	5	14	4	7	11	47	Dinajpur.
..	1	1	..	..	2	2	2	..	5	14	8	22	11	7	18	48	Jalpaiguri.
7	..	..	..	1	..	2	..	..	11	16	13	29	19	15	34	49	Darjeeling.
1	..	..	..	..	..	..	..	..	1	2	..	2	7	3	10	50	Rangpur.
2	..	..	..	1	..	..	..	..	1	2	2	4	3	1	4	51	Bogra.
3	..	..	..	..	..	1	..	..	4	6	2	8	8	5	13	52	Pabna.
13	2	2	..	2	..	2	..	..	7	20	13	33	23	10	33	53	Sirajganj.
5	1	1	..	3	..	1	..	..	7	10	15	25	18	16	34	54	English Bazar.
10	1	1	..	3	1	1	..	..	6	14	12	26	11	10	21	55	Nawabganj.
5	21	15	..	32	12	40	9	..	100	149	110	259	158	157	315	56	Dacca.
19	6	2	..	1	1	..	1	1	44	48	37	85	36	34	70	57	Narayan-ganj.
10	2	1	..	1	2	2	..	..	7	13	12	25	11	15	26	58	Mymen-singh.
5	..	1	..	1	..	1	..	1	1	5	6	11	8	6	14	59	Jamalpur.
2	1	..	..	..	..	1	..	..	4	5	5	10	10	11	21	60	Sherpur.
..	..	1	..	..	..	4	..	..	2	5	2	7	10	11	21	61	Kishorganj.
1	1	..	..	..	1	1	..	1	3	4	5	9	7	2	9	62	Bajitpur.
7	..	2	..	2	..	1	..	..	1	10	4	14	12	14	26	63	Tangail.
..	1	..	..	..	..	..	..	1	5	8	6	14	28	31	59	64	Faridpur.
2	2	1	..	..	..	1	..	..	17	20	24	44	14	15	29	65	Madaripur.
14	4	1	..	..	..	1	2	..	7	21	13	34	18	13	31	66	Barisal.
5	..	..	..	..	..	..	..	..	11	7	11	18	8	7	15	67	Pirojpur.
5	3	..	..	4	..	..	..	..	33	33	22	55	21	12	33	68	Chittagong.
4	2	.	..	..	..	..	..	..	8	9	6	15	7	9	16	69	Comilla.
7	1	2	..	..	..	..	..	1	14	16	9	25	26	19	45	70	Brahman-baria.
1	4	..	..	..	..	..	..	..	2	6	6	12	7	3	10	71	Chandpur.
473	316	259	24	535	333	394	108	21	1,671	3,024	2,457	5,481	..	..	..		
690	298	292	43	594	292	467	112	21	1,590	3,255	2,639	5,894	..	..	..		
−217	+18	−33	−19	−61	+41	−73	−4	..	+81	−231	−182	−413	..	..	..		

District Health Officers. Taken as a whole, the statement possesses a relative value, although the figures for individual towns probably only incorporated in the returns for districts as ordered in Government of Bengal, Municipal Department, letter No. 116 San., dated the 8th February Education Department, letter No. 93, dated the 26th March 1918.

R. B. KHAMBATA, M.R.C.S. (Eng.), L.R.C.P. (Lond.), D.P.H. (Camb.),
Director of Public Health, Bengal (offg.).

Vital Statistics for the month of March 1931 of the

Division	No	Districts.	Population under registration according to census of 1921.			Births registered.		Deaths							
			Male	Female	Total	Number registered (excluding still-births).	Still born number registered	Cholera.	Small-pox.	Plague.	Malaria.	Enteric fever	Measles.	Relapsing fever	Kala-azar.
Burdwan ..	1	Burdwan	689,282	673,993	1,363,275	4,476	49	291	57	..	909	32	2	..	3
	2	Birbhum	422,986	424,584	847,570	3,350	97	29	34	..	620	33	2	4	1
	3	Bankura	480,935	483,552	964,487	2,964	12	157	45	..	702	5	6	7	1
	4	Midnapur	1,316,273	1,308,652	2,626,925	7,829	176	478	32	..	1,372	25	6	..	9
	5	Hooghly ..	468,451	462,093	930,544	2,973	5	212	75	..	616	107	2	1	8
	6	Howrah ..	391,415	387,478	778,893	2,270	9	164	70	..	136	25	4	11	10
Presidency	7	24-Parganas	1,062,266	989,125	2,051,391	6,820	32	758	40	..	471	34	5	..	50
	8	Nadia ..	731,335	693,552	1,424,887	5,047	72	69	17	..	2,318	18	..	2	20
	9	Murshida-bad	591,676	599,742	1,191,418	4,714	137	97	11	..	1,362	5	3	1	4
	10	Jessore	887,182	824,898	1,712,080	5,045	133	319	21	..	2,419	21	6	1	18
	11	Khulna ..	741,741	684,945	1,426,686	5,159	108	171	2	..	738	74	4	8	22
Rajshahi	12	Rajshahi	753,539	711,538	1,465,077	6,221	102	111	2	..	2,266	10	12	11	15
	13	Dinajpur	885,427	801,901	1,687,328	6,135	61	2	22	..	1,418	99	32	92	104
	14	Jalpaiguri	494,432	427,317	921,749	3,530	158	..	12	..	809	..	1	5	4
	15	Darjeeling	136,217	124,273	260,490	968	72	..	1	..	159	2	3	3	5
	16	Rangpur	1,304,781	1,183,997	2,488,778	8,113	299	26	120	..	1,885	168	21	156	28
	17	Bogra ..	531,470	504,814	1,036,284	3,108	113	21	1	..	526	1	1	7	25
	18	Pabna ..	682,594	662,039	1,344,633	4,648	189	412	17	..	1,346	26	9	7	19
	19	Malda ..	478,872	480,103	958,975	3,475	42	8	11	..	2,137	20	..	..	9
Dacca ..	20	Dacca ..	1,485,445	1,490,470	2,975,915	9,065	263	892	167	..	646	54	8	..	34
	21	Mymensingh	2,447,431	2,278,695	4,726,126	14,559	461	776	98	..	640	36	48	28	63
	22	Faridpur	1,124,661	1,085,397	2,210,058	7,115	194	875	70	..	1,522	50	15	18	52
	23	Bakarganj	1,318,064	1,265,107	2,583,171	10,733	161	538	9	..	43	27	2	..	7
Chittagong	24	Chittagong	753,765	821,627	1,575,392	6,026	252	194	101	.	360	45	12	31	19
	25	Noakhali	738,722	734,064	1,472,786	6,417	254	100	7	..	168	60	12	10	39
	26	Tippera ..	1,367,598	1,311,029	2,678,627	7,089	181	478	94	..	295	104	20	95	130
	27	Chittagong Hill Tracts.	..	..	..										Not
		Total of month for Bengal.	22,288,560	21,414,985	43,703,545	147,944	3,722	7,178	1,136	..	25,823	1,081	236	498	696
		Total of corresponding month of previous year.	..	..	..	115,110	3,261	6,145	1,076	..	24,966	687	287	359	737
		Increase + or decrease −.	..	..	..	+32,834	+461	+1,033	+60	.	+857	+394	−51	+139	−41

REMARKS.—1. The above table is compiled from returns collected by the Subdivisional Officers and submitted to the Director of individual districts probably only approximate to the actual.

2 The vital statistics of municipalities with a population of less than 10,000 have been included in this statement with

3. Divisional totals and the birth and death ratios per mille per annum have been omitted from this statement according to

CALCUTTA, *the 9th September 1931.*

districts excluding towns with a population of 10,000 and over in Bengal.

registered.

Other fevers.	Dysentery.	Diarrhœa.	Influenza.	Pneumonia.	Phthisis.	Other respiratory diseases.	Injuries including suicide.	Deaths from child-birth.	Other causes.	Total of all causes.			Total of corresponding month of previous year.			No.	Districts.
										Male.	Female.	Total.	Male.	Female.	Total.		
1,203	35	102	5	94	37	32	26	28	394	1,676	1,574	3,250	1,547	1,391	2,938	1	Burdwan.
796	16	20	13	66	18	62	20	20	264	984	1,040	2,024	1,107	1,017	2,124	2	Birbhum.
512	25	92	9	77	29	36	36	17	347	1,084	1,019	2,103	1,293	1,179	2,472	3	Bankura.
1,745	100	134	7	209	63	54	68	51	763	2,676	2,440	5,116	3,049	2,761	5,810	4	Midnapur
329	32	87	15	121	36	60	31	17	233	1,007	975	1,982	839	812	1,651	5	Hooghly.
451	38	190	1	89	52	30	43	10	228	796	774	1,570	785	726	1,511	6	Howrah.
1,302	60	69	31	75	33	76	74	12	616	1,917	1,789	3,706	2,015	1,784	3,799	7	24-Parganas.
486	16	8	..	93	17	22	37	21	416	1,901	1,615	3,516	1,679	1,371	3,050	8	Nadia.
650	17	5	1	13	8	3	25	10	539	1,486	1,268	2,754	1,452	1,234	2,686	9	Murshidabad.
488	20	22	4	61	23	24	46	2.	289	2,004	1,799	3,803	1,859	1,539	3,398	10	Jessore.
484	31	24	2	43	21	35	50	26	533	1,191	1,077	2,268	1,265	1,140	2,405	11	Khulna.
437	20	22	..	6	3	14	41	28	416	1,845	1,569	3,414	1,922	1,729	3,651	12	Rajshahi.
928	28	48	20	126	57	41	108	72	50	1,746	1,510	3,256	1,885	1,493	3,328	13	Dinajpur.
294	41	37	47	180	65	33	17	43	296	1,006	878	1,884	920	772	1,692	14	Jalpaiguri.
142	13	6	2	26	32	16	13	1	88	271	236	507	283	277	560	15	Darjeeling.
1,943	79	64	18	163	23	160	25	53	246	2,609	2,564	5,173	1,772	1,562	3,334	16	Rangpur.
379	7	15	3	9	6	13	6	19	108	609	538	1,147	666	589	1,255	17	Bogra.
604	19	12	1	32	16	6	26	30	271	1,505	1,341	2,846	1,363	1,117	2,480	18	Pabna.
155	2	..	1	6	8	..	17	12	247	1,413	1,220	2,633	1,225	1,106	2,331	19	Malda.
1,950	187	85	4	44	45	81	48	55	877	2,743	2,434	5,177	2,718	2,355	5,073	20	Dacca
3,577	68	41	26	33	46	62	53	35	1,312	3,571	3,371	6,942	3,215	2,970	6,185	21	Mymensingh.
1,361	132	45	6	65	30	68	32	31	611	2,619	2,364	4,983	2,505	2,080	4,585	22	Faridpur.
2,542	79	26	..	11	13	10	90	22	1,455	2,543	2,331	4,874	1,994	1,804	3,798	23	Bakarganj.
2,148	46	32	14	36	12	13	54	24	180	1,754	1,567	3,321	1,556	1,420	2,976	24	Chittagong.
1,055	82	63	24	37	13	63	65	41	400	1,144	1,095	2,239	1,115	1,040	2,155	25	Noakhali.
1,458	128	40	10	26	28	17	59	9	681	1,896	1,611	3,507	2,074	1,792	3,866	26	Tippera.
under registration.																27	Chittagong Hill Tracts.
27,269	1,321	1,298	268	1,741	731	1,040	1,116	708	11,855	43,996	39,999	83,995	..	..	..		
26,288	1,218	1,252	298	1,968	751	910	1,069	628	10,474	42,053	37,060	79,113	..	..	..		
+981	+103	+46	−30	−227	−20	+130	+47	+80	+1,381	+1,943	+2,939	+4,882	..	..	..		

Public Health by the District Health Officers. Taken as a whole, the statement possesses a relative value, although the figures for those of the respective districts as ordered in Government of Bengal, Municipal Department, letter No. 118 San., dated the 8th February 1918, Government of India, Education Department, letter No. 93, dated the 26th March 1918.

R. B. KHAMBATA, M.R.C.S. (Eng.), L.R.C.P. (Lond.), D.P.H. (Camb.),
Director of Public Health, Bengal (offg.).

Vital statistics of towns with a population of 50,000 and over of the Bengal Presidency for the week ending Saturday, the 29th August 1931.

District.	No.	Towns.	Population under registration according to Census of 1921.			Births registered.		Deaths registered.																							
			Male.	Female.	Total	Number registered (excluding still-births).	Still-births registered.	Cholera.	Small pox.	Plague.	Malaria	Enteric fever.	Measles.	Relapsing fever.	Kala-azar.	Other fevers.	Dysentery.	Diarrhœa.	Influenza.	Pneumonia.	Phthisis.	Other respiratory diseases.	Injuries including suicide.	Deaths from child-birth	Other causes.	Total of all causes.			Total of corresponding week of the previous year.		
																									Male.	Female	Total	Male.	Female	Total.
Calcutta ..	1	Calcutta ..	724,248	353,016	1,077,264	502	25	4	2	..	9	16	1	..	5	25	26	29	20	75	87	36	6	.	232	309	216	525	284	210	494
Burdwan ..	2	Asansol Mining Settlement.	176,814	152,539	329,353	268	..	20	..	..	2	1	..	..	..	60	9	..	1	17	3	4	2	4	84	105	102	207	100	102	202
Howrah ..	3	Howrah ..	128,472	66,829	195,301	89	9	2	1	..	..	5	1	..	..	1	9	10	..	10	8	17	2	2	39	52	55	107	45	43	88
Dacca ..	4	Dacca ..	67,333	52,117	119,450	77	6	7	..	..	..	3	1	..	1	9	7	2	..	6	..	9	2	1	24	38	34	72	29	25	54
24-Parganas	5	Bhatpara ..	45,723	19,886	65,609	20	1	..	1	..	3	..	..	..	1	5	2	2	..	1	..	..	..	..	4	9	10	19	7	4	11
	6	Titagarh ..	36,533	15,918	52,451	5	4	..	..	..	..	..	..	..	..	8	..	1	..	..	..	..	..	..	1	6	4	10	8	10	18

R. B. KHAMBATA, M.R.C.S. (ENG.), L R.C.P. (LOND.), D.P H. (CAMB.), *Director of Public Health, Bengal (offg.).*

CALCUTTA, *the 9th September 1931.*

Vital statistics of towns with a population of 50,000 and over of the Bengal Presidency for the week ending Saturday, the 5th September 1931.

District.	No.	Towns.	Population under registration according to Census of 1921.			Births registered.		Deaths registered.																							
			Male.	Female.	Total	Number registered (excluding still-births).	Still-births registered	Cholera	Small pox	Plague	Malaria	Enteric fever	Measles	Relapsing fever	Kala-azar	Other fevers.	Dysentery	Diarrhœa	Influenza	Pneumonia	Phthisis	Other respiratory diseases	Injuries including suicide	Deaths from child-birth	Other causes.	Total of all causes			Total of corresponding week of the previous year		
																										Male	Female	Total.	Male	Female	Total
Calcutta	1	Calcutta	724,248	353,016	1,077,264	584	58	2	1		16	18	1	.	3	16	41	27	14	73	50	31	16		[illegible]	[illegible]	[illegible]	[illegible]	271	225	496
Burdwan	2	Asansol Mining Settlement	176,814	152,539	329,353	276	2	37			[illegible]		.			7[illegible]	[illegible]	[illegible]	1	[illegible]	3	[illegible]	2	3	111	137	1[illegible]3	270	59	48	107
Howrah	3	Howrah	128,472	66,829	195,301	104	9	1			5	9	.		1	[illegible]	1	[illegible]		1[illegible]	[illegible]	11	2	1	[illegible]	4[illegible]	[illegible]	[illegible]	[illegible]	45	99
Dacca	4	Dacca	67,[illegible]33	52,117	119,450	68	4	8				3	2	..	1	3	[illegible]	1		1		[illegible]	2	1	30	[illegible]1	[illegible]	[illegible]	1[illegible]	[illegible]	38
24-Parganas	5	Bhatpara	45,723	19,[illegible]36	65,609	32		1		.	1		..	..		6	1	..	..	.	.		1		3	[illegible]	6	13	11	5	16
	6	Titagarh	36,533	15,918	52,451	7	1		.				..		.	[illegible]			.					1		5	4	9	4	8	12

R. B. KHAMBATA, M.R.C.S. (Eng.), L.R.C.P. (Lond.), D.P.H. (Camb.), *Director of Public Health, Bengal (offg.).*

CALCUTTA, *the 10th September 1931.*

IRRIGATION DEPARTMENT, BENGAL.

Irrigation operations for the official year 1931-32.

Area leased for irrigation up to end of June 1931.

Circle.	District.	Canal.	Estimated full discharge.	Average discharge in month.	Discharge utilised.	Approximate area of land irrigated during the year up to the end of the month.	Approximate area of land under irrigation up to the same date last year.	Details of areas leased.							Rainfall, 1931-32.		Rainfall, 1930-31.	
								Long term leases.	Season leases.					Grand Total.	During month.	Up to end of month.	During month.	Up to end of month.
									Kharif.	Rabi.	Sugarcane.	Hot weather.	Total.					
			C. ft.	C. ft.	C. ft.	Acres.	Acres.	Acres.	Acres.	Acres.	Acres.	Acres.	Acres.	Acres.	Inches.	Inches.	Inches.	Inches.
South-Western.	Midnapore	Midnapore	1,411	70	66	..	2,095	37,205	..	..	..	..	..	37,205	3·50	7·96	6·56	12·69
		Panskura	522	23	2	10	..	776	..	..	..	..	..	776	4·20	6·55	9·89	13·93
	Howrah ..	Tidal Reaches, Ranges I and II	..	..	..	..	..	..	..	..	..	..	..	..	8·04	14·56	14·07	19·31
		Total Midnapore Canal ..	..	..	..	10	2,095	37,981	..	..	..	..	..	37,981	..	..	..	..
		Total of the corresponding period, last year ..	..	..	..	..	..	47,847	1,272	..	..	..	1,272	49,119	..	..	..	..
	Burdwan and Hooghly.	Eden Canal	1,000	27	..	..	..	14,015	..	3	8	..	11	14,026	6·59	12·08	5·85	12·52
		Total of the corresponding period, last year ..	..	..	..	..	..	17,796	9*	20	28	..	57	17,853	..	..	..	..
		GRAND TOTAL ..	..	..	..	10	2,095	51,996	..	3	8	..	11	52,007	..	..	..	..
		GRAND TOTAL OF THE CORRESPONDING PERIOD OF LAST YEAR ..	..	..	..	..	..	65,643	1,281	20	28	..	1,329	66,972	..	..	..	..

* For single watering.

CALCUTTA, *the 8th September 1931.*

B. L. SUBARWAL,
Personal Assistant to the Chief Engineer to the Government of Bengal.

DISTRICT REPORTS ON WEATHER AND CROPS.

For the week ending on the 9th September 1931.

Summary.—During the week the rainfall was generally moderate to heavy. Transplantation of winter paddy seedlings is progressing under favourable conditions. Cutting, steeping and washing of jute continue. Condition of standing crops is generally satisfactory except in the flood affected areas. Distress continues in Nadia, Rangpur and Bogra. 9,071 persons were gratuitously relieved in Rangpur. Relief measures are also being continued in other places. The average price of common rice for the province has fallen by about 0·24 per cent. as compared with that of the previous week.

Serial No.	District and subdivision.	Rainfall.	Price of common rice, in seers, per rupee.		Character of the weather, condition of crops, etc.
			This week.	Previous week.	
1	2	3	4	5	6
		Inches.			
1	24-Parganas ..	6·50	9 7/16	9½	Weather seasonable. Fodder and water are sufficient. Cattle-disease is reported from Sandeshkhali police-station in Basirhat subdivision. Condition of jute is satisfactory; nearly half the crop is harvested in Basirhat and Diamond Harbour subdivisions.
	Diamond Harbour.	5·20	10½	10½	
	Barrackpore ..	4·11	8	8	
	Baraset ..	6·72	9	9	
	Basirhat ..	4·35	9	9	
2	Nadia ..	4·52	9½	9½	Weather seasonable. Stock of rice is sufficient. Gratuitous relief continues in Kushtia and Chuadanga subdivisions. Fodder and water are sufficient.
	Kushtia ..	3·90	10	10	
	Meherpur ..	4·60	8 13/16	8 3/16	
	Chuadanga ..	3·12	10	10	
	Ranaghat ..	2·48	10	10	
3	Murshidabad ..	5·67	10½	10½	Weather hot and cloudy. Prospects of crops are favourable. Cattle-disease is reported from Raghunathganj and Suti police-stations in Jangipur subdivision. Fodder and water are sufficient.
	Lalbagh ..	7·27	10½	10½	
	Jangipur ..	10·24	11	11	
	Kandi ..	5·05	12	12	
4	Jessore ..	4·05	9	9	Weather seasonable. Harvesting of jute continues.
	Jhenidah ..	4·07	10	10	
	Magura ..	7·10	12	10	
	Narail ..	6·10	9½	9½	
	Bongaon ..	4·54	9½	9½	
5	Khulna ..	3·02	11	11	Weather seasonable; its effects on crops are fair. Cattle-disease is reported from thana Satkhira. Fodder and water are sufficient. Export and import of rice continue slowly.
	Satkhira ..	2·54	10	10	
	Bagerhat ..	8·70	8½	8½	

Serial No.	District and subdivision.	Rainfall.	Price of common rice, in seers, per rupee.		Character of the weather, condition of crops, etc.
			This week.	Previous week.	
1	2	3	4	5	6
		Inches.			
6	Burdwan ..	2·88	10	10	Weather seasonable. Fodder and water are sufficient. Cattle-disease exists in some villages of Mongalkote police-station.
	Asansol ..	4·70	9	9	
	Katwa ..	1·47	11	11	
	Kalna ..	1·09	10½	10½	
7	Birbhum ..	5·89	13	12¾	Weather cloudy. Fodder and water are sufficient.
	Rampurhat ..	3·86	12½	11½	
8	Bankura ..	4·03	11½	11	Weather hot and cloudy. Prospects of standing crops are good. Fodder and water are sufficient
	Vishnupur ..	4·86	12½	12	
9	Midnapore ..	0·46	12¾	12⅞	Weather seasonable. Fodder and water are sufficient. Cattle-disease exists at Sadar. Harvesting of jute has commenced in Tamluk subdivision
	Contai ..	1·98	13	13	
	Tamluk ..	0·30	10½	10½	
	Ghatal ..	2·18	12¼	12¼	
	Jhargram ..	0·61	11¾	11¾	
10	Hooghly ..	6·05	9½	9½	Weather seasonable Fodder is sufficient. Harvesting of *aus* paddy has commenced.
	Serampore ..	2·35	9½	9½	
	Arambagh ..	2·93	13¼	(*n*)	
11	Howrah ..	5·90	10	10	Weather seasonable, its effects are good on paddy crops. No export or import. Fodder and water are sufficient.
	Uluberia ..	5·68	11	11½	
12	Rajshahi (Rampur-Boalia).	9·72	9	10	Weather seasonable Fodder is short in Gurudaspur and Singra thanas. Cattle-disease is reported from Gurudaspur thana. Transplantation of *aman* paddy and harvesting of jute continue.
	Naogaon ..	8·53	10	10½	
	Nator ..	7·75	(*n*)	9⅜	
13	Dinajpur ..	10·36	10	10	Weather seasonable; its effects on agricultural operations are favourable. Prospects of standing crops are fair. Fodder and water are sufficient. Cattle-disease is reported from Porsha and Patnitola police-stations
	Thakurgaon ..	7·22	11	11	
	Balurghat ..	11·60	12	12	
14	Jalpaiguri ..	2·85	8	7	Weather favourable on agricultural operations More rain is wanted at Sadar. Fodder and water are sufficient.
	Alipur ..	10·85	6½	6½	
15	Darjeeling ..	13·43	7	7	Marua and paddy are growing. Fodder and water are sufficient.
	Kurseong ..	13·52	6½	7	
	Siliguri ..	6·52	9	10	
	Kalimpong ..	8·74	6	(*n*)	

(*n*) Not reported.

Serial No.	District and subdivision.	Rainfall.	Price of common rice, in seers, per rupee.		Character of the weather, condition of crops, etc.
			This week	Previous week.	
1	2	3	4	5	6
		Inches.			
16	Rangpur ..	15·69	9	9	Weather cloudy. Prospects of crops are unsatisfactory. Transplantation of *aman* and *aus* paddy is nearly finished. Fodder is insufficient in flooded areas. Water sufficient. 9,071 persons received gratuitous relief.
	Nilphamari ..	12·22	9½	9½	
	Kurigram ..	10·84	10	10	
	Gaibandha ..	7·34	9	9	
17	Bogra ..	7·56	10½	10½	Weather seasonable. Heavy showers created panic and apprehension of damage to seeds and seedlings. Distribution of agricultural loans and gratuitous relief are in full swing. Harvesting of *aus* crop and steeping of jute are almost over. Transplantation of *aman* crop is still going on.
18	Pabna ..	4·67	9¾	9½	Export and import are normal. Fodder is keenly wanted. Prospects of standing crops are gloomy. Rivers are again rising.
	Sirajganj ..	11·10	11	(*n*)	
19	Malda ..	7·54	10½	11	Weather seasonable. Prospects of standing crops are good. Transplantation of paddy continues. Fodder and water are sufficient.
20	Cooch Behar ..	9·24	10	9⅝	Weather seasonable. Cutting, steeping and washing of jute are continuing. Harvesting of *aus* paddy is nearing completion. Prospects of standing crops are fair. Fodder and water are sufficient. Cattle-disease is reported from Mathabhanga police-station.
21	Dacca ..	6·88	9½	9½	Rainfall at North Sadar (Kapasia) 11·68. Weather seasonable with heavy rain. Harvesting of *aus* paddy is over. Condition of standing crops is hopeful. Twelve annas crop is harvested. Fodder is available.
	Manikganj ..	5·94	9½	(*n*)	
	Narayanganj	8·50	8½	8½	
	Munshiganj ..	7·01	10	10	
22	Mymensingh ..	5·52	9	9	Weather seasonable. Prospects of standing crops are fair. Fodder is now available.
	Jamalpur ..	6·76	9	9½	
	Tangail ..	10·35	9	9	
	Netrakona ..	10·92	9	10	
	Kishorganj ..	9·50	9	9	

(*n*) Not reported.

Serial No.	District and subdivision.	Rainfall.	Price of common rice, in seers, per rupee.		Character of the weather, condition of crops, etc.
			This week.	Previous week.	
1	2	3	4	5	6
		Inches.			
23	Faridpur ..	11·20	9½	9½	Weather cloudy and rainy. Its effects are not favourable. Prospects of standing crops are not good. No import or export. Fodder insufficient. Water ample.
	Goalundo (Rajbari).	9·51	10½	10½	
	Madaripur ..	13·06	9½	9½	
	Gopalganj (*a*)	3·16	9½	9	
24	Bakarganj (Barisal).	3·90	9½	9½	Weather seasonable. Fodder and water are sufficient. Prospects of standing crops are good.
	Pirojpur ..	7·27	9¾	(*n*)	
	Patuakhali ..	10·90	8¾	8¾	
	Dakshin Shabazpur (Bhola).	7·82	9	9	
25	Chittagong ..	8·15	10 11*	10 11*	Weather seasonable. Prospects of standing crops fair. Transplantation of *aman* paddy crop continues. Fodder and water are sufficient.
	Cox's Bazar ..	(*n*)	(*n*)	12	
26	Tippera (Comilla).	3·67	8	8	Prospects of crops are fair.
	Brahmanbaria	4·32	10	10	
	Chandpur ..	6·16	8⅞	9⅛	
27	Noakhali ..	6·72	9	9	Fodder and water are sufficient.
	Feni ..	8·07	10	11	
28	Chittagong Hill Tracts.	8·85	11	11	Weather seasonable. Cattle-disease prevails in certain places. Prompt action is being taken.
29	Tripura State ..	2·50	7	8	Weather seasonable. Cleansed cotton sells at Rs. 5 to Rs. 12⅝ per maund and jute at Rs. 3 to Rs. 5 per maund.

(*n*) Not reported. * Burma rice.

(*a*) The rainfall at Haridaspur, which is very near to Gopalganj, is not shown here.

DACCA, *the 12th September 1931.* J. C. ROY, for *Director of Agriculture, Bengal.*

Wholesale prices-current of certain articles in the Calcutta mart of Bengal for the second half of August 1931.

Mart.	Wheat.			Raw cotton.		
	Present return.	Next preceding return	Corresponding return of last year.	Present return.	Next preceding return.	Corresponding return of last year.
1	2	3	4	5	6	7
	Rs. A. P.	Rs. A. P.	Rs. A. P.	Rs. A. P.	Rs. A. P.	Rs. A. P.
Calcutta	2 14 0	3 2 0	1 6 0	16 12 0	16 8 0	18 4 0

Mart.	Coal.			Raw jute (weighted average).			*Gur* (sugarcane).		
	Present return.	Next preceding return.	Corresponding return of last year.	Present return.	Next preceding return.	Corresponding return of last year.	Present return.	Next preceding return.	Corresponding return of last year.
	8	9	10	11	12	13	14	15	16
	Rs. A. P.	Rs. A. P.	Rs. A. P.	Rs. A. P.	Rs. A. P.	Rs. A. P.	Rs. A. P.	Rs. A. P.	Rs. A. P.
Calcutta	0 6 6	0 6 6	0 6 6	5 5 1	4 13 8	4 12 0	6 4 0	6 1 0	8 8 0

J. C ROY, for *Director of Agriculture, Bengal*

DACCA, *the 12th September 1931.*

Prices-current (retail) of common rice and salt in the districts of Bengal for the second half of August 1931.

Districts and Marts.	Quantity per rupee in seers of eighty tolas.								
	Common rice.						Salt.		
	Average.			Cheapest.					
	Present return.	Next preceding return.	Corresponding return of last year.	Present return.	Next preceding return.	Corresponding return of last year.	Present return.	Next preceding return.	Corresponding return of last year.
	S. Ch.	S. Ch.	S. Ch.	S. Ch.	S. Ch.	S. Ch.	S. Ch.	S. Ch.	S. Ch.
Presidency Division.									
24-Parganas—									
1 Chetla Hat ..	9 12	9 4	6 11	10 12	10 8	7 4	16 0	16 0	14 0
2 Mogra Hat ..	11 14	11 7	7 9	12 13	13 5	8 6	14 8	14 8	16 0
3 Calcutta-Beliaghata	7 4	7 4	5 5	9 6	9 6	6 10	13 0	13 0	10 8†
Nadia—									
4 Goari	9 8	9 8	6 8	10 0	10 0	7 8	13 8	13 8	13 8
5 Ranaghat ..	10 0	10 0	7 4	10 0	10 4	7 8	13 0* 16 0	13 0* 16 0	13 0* 16 0
Murshidabad—									
6 Berhampore ..	10 8	10 8	7 0	11 4	11 0	7 8	16 0	16 0	14 0*
7 Kandi	12 0	12 0	8 4	12 4	12 8	8 8	16 0	16 0	15 0
8 Jangipur ..	10 0	10 8	8 0	10 8	11 0	8 4	16 0	16 0	16 0
Jessore—									
9 Sadar	9 0	9 0	7 0	9 0	11 0	8 0	16 0†	16 0†	16 0
10 Bongaon ..	10 0	9 8	7 4	12 0	10 8	9 6	13 0* 16 0	13 0* 16 0	13 0* 16 0
Khulna—									
11 Sadar	11 0	11 0	6 0	12 0	12 0	7 0	16 0†	16 0†	14 8
12 Bagerhat ..	8 8	8 8	6 0	9 8	9 8	6 8	13 8	13 8	12 8
Burdwan Division.									
Burdwan—									
13 Sadar	8 8	8 14	8 0	(n)	(n)	9 8	16 0	16 0	16 0
14 Kalna	10 0	10 0	8 0	10 4	10 8	8 2	16 4	16 4	16 0
Birbhum—									
15 Suri	12 0	12 0	8 0	12 0	12 0	8 8	14 0	15 0	14 0
16 Rampurhat ..	11 0	11 0	8 0	12 0	12 0	8 8	16 0	16 0	16 0
Bankura—									
17 Sadar	11 0	10 0	8 8	12 8	11 0	9 0	15 8	15 0	15 8
18 Vishnupur ..	11 4	11 4	8 4	12 8	12 0	8 12	13 0	13 0	11 8

* Karkach. (n) Not reported.

N.B.—The prices of Karkach and Liverpool salt tally with each other in marts marked †.

Prices-current (retail) of common rice and salt in the districts of Bengal for the second half of August 1931.

Districts and Marts.	Quantity per rupee in seers of eighty tolas.								
	Common rice.						Salt.		
	Average.			Cheapest.					
	Present return.	Next preceding return.	Corresponding return of last year.	Present return.	Next preceding return.*	Corresponding return of last year.	Present return.	Next preceding return.	Corresponding return of last year.
BURDWAN DIVISION—*concld.*	S. CH.	S. CH.	S. CH.	S. CH.	S. CH.	S. CH.	S. CH.	S. CH.	S. CH.
Midnapore—									
19 Sadar	12 6	13 0	7 0	13 0	13 12	7 8	16 0	16 0	8 0
20 Contai	13 0	13 0	7 0	14 0	14 0	8 0	14 0	12 0	10 8
Hooghly—									
21 Sadar	9 8	9 4	7 8	11 0	11 0	8 4	13 0	14 0	16 0
22 Arambagh ..	13 4	12 0	8 0	(*n*)	12 8	8 8	12 4* / 14 4	12 0* / 16 0	13 0* / 15 0
Howrah—									
23 Sadar	8 0	10 0	7 8	11 0	11 4	8 0	16 0	16 0	16 0
24 Uluberia ..	11 0	11 0	7 0	11 0	13 0	8 0	19 0	18 8	17 8
RAJSHAHI DIVISION.									
Rajshahi—									
25 Rampur-Boalia ..	9 0	9 8	7 0	10 0	10 8	8 0	12 0†	12 0†	12 0
26 Nator	10 8	9 0	6 12	10 8	9 12	7 8	12 0†	12 0†	12 0†
27 Dinajpur—Railway Hat	9 0	9 0	7 0	11 0	11 0	7 8	14 0	14 0	14 0
28 Jalpaiguri—Sadar ..	9 0	9 0	5 12	10 0	10 0	7 0	13 0	12 8	13 0†
Darjeeling—									
29 Sadar	7 0	7 0	6 0	9 0	9 8	7 4	6 0* / 10 0	6 0* / 10 0	6 0* / 10 0
30 Siliguri ..	10 0	8 8	4 12	10 0	10 0	6 0	9 0* / 13 0	9 0* / 13 0	11 0
Rangpur—									
31 Sadar	9 0	9 0	4 8	10 4	10 4	6 6	12 0†	12 0†	9 0†
32 Nilphamari ..	9 8	10 0	6 4	9 8	10 0	(*a*)	15 0†	15 0†	10 0†
33 Bogra—Sadar ..	9 6	9 6	7 0	10 8	10 8	7 8	15 0	15 0	12 0†
Pabna—									
34 Sadar	9 4	9 4	6 4	11 0	11 0	6 8	12 8	12 8	12 8*
35 Serajganj ..	11 8	10 0	6 6	11 8	10 0	7 8	15 8*	15 8*	12 0*
Malda—									
36 Sadar	10 8	10 0	7 0	(*n*)	10 8	8 0	13 0*	14 0*	14 0
37 Balia—Nawabganj	10 6	10 4	8 0	(*n*)	10 4	10 0	15 0	14 8	15 0

(*a*) Not available. (*n*) Not reported. * Karkach.

N.B.—The prices of Karkach and Liverpool salt tally with each other in marts marked †.

Prices-current (retail) of common rice and salt in the districts of Bengal for the second half of August 1931.

Districts and Marts.	Quantity per rupee in seers of eighty tolas.								
	Common rice.						Salt.		
	Average.			Cheapest.					
	Present return.	Next preceding return.	Corresponding return of last year.	Present return.	Next preceding return.	Corresponding return of last year.	Present return.	Next preceding return.	Corresponding return of last year.
	S. Ch.	S. Ch.	S. Ch.	S. Ch.	S. Ch.	S. Ch.	S. Ch.	S. Ch.	S. Ch.
Dacca Division.									
Dacca—									
38 Sadar	9 8	9 4	6 3	11 0	10 8	7 4	15 0	15 0	14 0
39 Mirkadim ..	10 0	11 0	7 2	11 0	12 0	7 6	15 0	15 0	15 0
Mymensingh—									
40 Nasirabad ..	8 14	9 0	5 14	10 0	11 0	6 2	12 0*	12 0*	12 0*
41 Netrakona ..	10 0	11 0	5 12	11 0	12 0	6 4	12 8* 15 0	11 0* 13 0	12 0* 15 0
Faridpur—									
42 Sadar	9 8	10 0	5 12	11 0	11 0	6 4	12 0	12 0	11 0
43 Rajbari ..	10 8	9 0	0 0	10 8	10 8	7 0	12 0†	12 0†	12 0
Bakarganj—									
44 Barisal ..	9 8	9 8	6 0	10 8	10 8	6 8	16 0	16 0	16 0
45 Pirojpur ..	9 12	10 0	6 4	10 0	10 8	6 8	13 0†	13 0†	13 0
Chittagong Division.									
Tippera—									
46 Comilla ..	8 14	8 0	5 13	8 14	8 6	8 3	12 12	12 14	12 14
47 Chandpur ..	8 14	9 2	6 10	12 4	9 6	7 0	13 4	13 5	13 4
Noakhali—									
48 Kalitara Hat ..	8 0	9 0	5 5	9 0	10 0	6 0	13 0	13 0	13 5
49 Feni Hat ..	9 0	8 8	5 8	12 0	12 0	8 0	7 0* 13 0	9 0* 13 0	7 0* 13 0
Chittagong—									
50 Sadar	10 0	12 0	7 8	12 0	14 0	8 8	18 0	18 0	16 8
51 Cox's Bazar ..	9 0	9 0	5 8	10 0	10 0	(a)	14 0	14 0	13 0
52 Chittagong Hill Tracts —Rangamati ..	11 8	11 8	7 8	13 0	12 0	8 0	5 8* 12 0	5 8* 12 0	5 8* 12 0

(a) Not available. * Karkach.

N.B.—The prices of Karkach and Liverpool salt tally with each other in marts marked †.

DACCA, *the 12th September 1931.* J. C. ROY, for *Director of Agriculture, Bengal.*

Statement showing the daily gauge readings of certain rivers at the stations named below for the 28th August 1931.

Name of river and place where readings are taken.	Hour.	Reading on gauge.	Value of zero referred to P. W. D. datum.	Height above P. W. D. datum.	Compared with previous day's height.		Height above P. W. D. datum on same date in—	
					Rise.	Fall.	1930.	1929.
Ganges .. Monghyr ..	6 a.m. ..	122·10′	0·00′	122·10′	..	1·30′	122·10′	123·60′
Ganges .. Rajmahal ..	6 „ ..	83·00′	0·00′	83·00′	..	0·60′	82·40′	83·40′
Ganges .. Goalundo ..	8-24 „ ..	27·60′	1·409′	29·009′	..	0·20′	26·409′	25·909′
Bhagirathi .. Swarupganj ..	6 p.m. ..	27·36′	0·00′	27·36′	0·14′	..	28·05′	26·00′
Brahmaputra .. Dibrugarh ..	8 a.m. ..	29·80′	302·70′	332·50′	0·20′	..	340·00′	334·26′
Brahmaputra .. Gauhati ..	....	19·70′	136·958′	156·658′	..	0·20′	161·158′	153·258′
Brahmaputra .. Serajganj ..	12-24 p.m. ..	38·60′	1·509′	40·109′	..	0·4 ′	4 ·509′	37·409′
Dhaleswari .. Sabhar ..	7 a.m. ..	22·60′	0·00′	22·60′	..	0·20′	20·90′	20·50′
Meghna .. Fenchuganj ..	7 a.m. ..	26·80′	1·509′	28·309′	Steady		27·709′	29·909′
Meghna .. Bhairab Bazar ..	6-24 „ ..	19·33′	1·61′	20·94′	..	0·08′	20·44′	19·19′
Meghna .. Chandpur ..	6-4 p.m. ..	11·92′	1·61′	13·53′	..	0·25′	13·53′	13·11′
Lakhya .. Narayanganj ..	7 a.m. ..	24·46′	−5·59′	18·87′	..	0·12′	17·53′	16·58′
Madaripur Bil Route .. Takerhat ..	3-24 p.m. ..	15·05′	0·00′	15·05′	..	0·15′	13·30′	13·15′
Damodar .. Edilpur ..	6 a.m. ..	8·00′	92·58	100·58′	2·00′	..	101·41′	101·41′

Statement showing the daily gauge readings of certain rivers at the stations named below for the 29th August 1931.

Name of river and place where readings are taken.	Hour.	Reading on gauge.	Value of zero referred to P. W. D. datum.	Height above P. W. D. datum.	Compared with previous day's height.		Height above P. W. D datum on same date in—	
					Rise.	Fall.	1930	1929.
Ganges .. Monghyr	6 a.m. ..	121·70′	0·00′	121·70′	..	0·40′	121·60′	123·20′
Ganges .. Rajmahal	6 „ ..	81·90′	0·00′	81·90′	..	1·10′	82·00′	..
Ganges .. Goalundo	8-24 „ ..	27·40′	1·409′	28·809′	..	0·20′	26·409′	25·709′
Bhagirathi .. Swarupganj	6 p.m. ..	27·44′	0·00′	27·44′	0·08′	..	28·20′	26·21′
Brahmaputra .. Dibrugarh	8 a.m. ..	29·30′	302·70′	332·00′	..	0·50′	341·50′	333·96′
Brahmaputra .. Gauhati	....	19·40′	136·958′	156·358′	..	0·30′	161·598′	..
Brahmaputra .. Serajganj	12-24 p.m. ..	38·20′	1·509′	39·709′	..	0·40′	40·909′	37·309′
Dhaleswari .. Sabhar	7 a.m. ..	22·40′	0·00′	22·40′	..	0·20′	0·30′	20·30
Meghna .. Fenchuganj	7 a.m. ..	26·60′	1·509′	28·109′	..	0·20′	27·659′	30·059′
Meghna .. Bhairab Bazar	6-24 „ ..	19·25′	1·61′	20·86′	..	0·08′	0·08′	19·11′
Meghna .. Chandpur	6-54 „ ..	11·75′	1·61′	13·36′	..	0·17′	13·36′	12·78′
Lakhya .. Narayanganj	7 a.m. ...	24·30′	−5·59′	18·71′	..	0·16	17·49′	..
Madaripur Bil Route .. Takerhat	3-35 p.m. ..	14·90′	0·00′	14·90′	..	0·15′	13·40′	13·05′
Damodar .. Edilpur	6 a.m. ..	8·67′	92·58′	101·25′	0·67′	..	102·41′	105·08′

Statement showing the daily gauge readings of certain rivers at the stations named below for the 30th August 1931.

Name of river and place where readings are taken.	Hour.	Reading on gauge.	Value of zero referred to P.W.D. datum.	Height above P. W. D. datum.	Compared with previous day's height.		Height above P. W. D. datum on same date in—	
					Rise.	Fall.	1930.	1929.
Ganges .. Monghyr ..	6 a.m. ..	122·40′	0·00′	122·40′	0·70′	..	121·30′	122·70′
Ganges .. Rajmahal ..	6 „ ..	81·55′	0·00′	81·55′	..	0·35′	81·60′	82·70′
Ganges .. Goalundo ..	8-24 „ ..	27·00′	1·409′	28·409′	..	0·40′	26·309′	25·709′
Bhagirathi .. Swarupganj ..	8 a.m. ..	27·34′	0·00′	27·34′	..	0·10′	28·09′	26·45′
Brahmaputra .. Dibrugarh ..	8 a.m.	29·20′	302·70′	331·90′	..	0·10′	341·70′	333·76′
Brahmaputra .. Gauhati ..	....	19·00′	136·958′	155·958′	..	0·40′	162·858′	154·158′
Brahmaputra .. Serajganj ..	12-24 p.m. ..	37·90′	1·509′	39·409′	..	0·30′	41·309′	37·309′
Dhaleswari .. Sabhar ..	7 a.m. ..	22·10′	0·00′	22·10′	..	0·30′	21·50′	20·10′
Meghna .. Fenchuganj. ..	7 a.m. ..	26·50′	1·509′	28·009′	..	0·10′	27·659′	30·059′
Meghna .. Bhairab Bazar ..	6-24 „ ..	19·17′	1·61′	20·78′	..	0·08′	20·57′	18·94′
Meghna .. Chandpur ..	7-54 „ ..	11·50′	1·61′	13·11′	..	0·25′	13·19′	12·61′
Lakhya .. Narayanganj ..	7 a.m. ..	24·08′	–5·59′	18·49′	..	0·22′	17·33′	16.16′
Madaripur Bil Route .. Takerhat ..	3-45 p.m. ..	14·70′	0·00′	14·70′	..	0·20′	13·35′	12·19′
Damodar .. Edilpur ..	6 a.m. ..	7·83′	92·58′	100·41′	..	0·84′	100·91′	103·33′

Statement showing the daily gauge readings of certain rivers at the stations named below for the 31st August 1931.

Name of river and place where readings are taken.	Hour.	Reading on gauge.	Value of zero referred to P. W. D. datum	Height above P. W. D. datum.	Compared with previous day's height.		Height above P. W. D. datum on same date in—	
					Rise.	Fall.	1930.	1929.
Ganges .. Monghyr	6 a.m. ..	122·90′	0·00′	122·90′	0·50′	..	120·80′	122·50′
Ganges .. Rajmahal	6 „ ..	81·60′	0·00′	81·60′	0·05′	..	81·20′	82·45′
Ganges .. Goalundo	8-24 „ ..	26·80′	1·409′	28·209′	..	0·20′	26·309′	25·609′
Bhagirathi .. Swarupganj	8 a.m. ..	27·09′	0·00′	27·09′	..	0·25′	27·95′	26·39′
Brahmaputra .. Dibrugarh	8 a.m. ..	29·20′	302·70′	331·90′	Steady		341·00′	333·61′
Brahmaputra .. Gauhati	....	18·30′	136·958′	155·258′	..	0·70′	163·258′	154·758′
Brahmaputra .. Serajganj	12-24 p.m.	37·60′	1·509′	39·109′	..	0·30′	42·009′	37·109′
Dhaleswari .. Sabhar	7 a.m. ..	21·90′	0·00′	21·90′	..	0·20′	21·70′	19·90′
Meghna .. Fenchuganj	7 a.m. ..	26·40′	1·509′	27·909′	..	0·10′	27·759′	29·909
Meghna .. Bhairab Bazar	6-24 „ ..	19·08′	1·61′	20·69′	..	0·08′	20·78′	18·94′
Meghna .. Chandpur	8-54 „ ..	11·50′	1·61′	13·11′	Steady		13·03′	12·61′
Lakhya .. Narayanganj	7 a.m. ..	23·92′	−5·59′	18·33′	..	0·16′	17·08′	16·03′
Madaripur Bil Route .. Takerhat	4-15 p.m. ..	14·50′	0·00′	14·50		0·20′	13·30′	12·80′
Damodar .. Edilpur	6 a.m. ..	7·67′	92·58′	100·25	..	0·16′	100·50′	101·91′

Statement showing the daily gauge readings of certain rivers at the stations named below for the 1st September 1931.

Name of river and place where readings are taken.	Hour.	Reading on gauge.	Value of zero referred to P. W. D. datum.	Height above P. W. D. datum.	Compared with previous day's height.		Height above P. W. D. datum on same date in—	
					Rise.	Fall	1930.	1929.
Ganges .. Monghyr ..	6 a.m. ..	123·10′	0·00′	123·10′	0·20′	..	120·40′	123·00′
Ganges .. Rajmahal ..	6 ,, ..	81·85′	0·00′	81·85′	0·25′	..	80·90′	82·50′
Ganges .. Goalundo ..	8-24 ,, ..	26·70′	1·409′	28·109′	..	0·10′	26·409′	25·009′
Bhagirathi .. Swarupganj ..	8 a.m. ..	26·70′	0·00′	26·70′	..	0·39′	27·09′	26·22′
Brahmaputra .. Dibrugarh ..	8 a.m. ..	29·60′	302·70′	332·30′	0·40′	..	340·30′	333·56′
Brahmaputra .. Gauhati ..	....	18·00′	136·958′	154·958′	..	0·30′	163·458′	154·958′
Brahmaputra .. Serajganj ..	12-24 p.m. ..	37·30′	1·509′	38·809′	..	0·30′	42·309′	37·109′
Dhaleswari .. Sabhar ..	7 a.m. ..	21·60′	0·00′	21·60′	..	0·36′	21·96′	19·70′
Meghna .. Fenchuganj ..	7 ,, ..	26·30′	1·509′	27·809′	..	0·10′	27·859′	29·909′
Meghna .. Bhairab Bazar ..	6-24 ,, ..	18·83′	1·61′	20·44′	..	0·25′	20·86′	18·86′
Meghna .. Chandpur ..	9-54 ,, ..	11·50′	1·61′	13·11′	Steady		12·94′	12·36′
Lakhya .. Narayanganj ..	7 a.m. ..	23·83′	—5·59′	18·24′	..	0·09′	16·95′	15·91′
Madaripur Bil Route .. Takerhat ..	9-24 a.m. ..	14·35′	0·00′	14·35′	..	0·15′	13·20′	12·65′
Damodar .. Edilpur ..	6 a.m. ..	7·42′	92·58′	100·00′	..	0·25′	99·58′	100·75′

Statement showing the daily gauge readings of certain rivers at the stations named below for the 2nd September 1931.

Name of river and place where readings are taken.	Hour.	Reading on gauge.	Value of zero referred to P. W. D. datum.	Height above P. W. D. datum.	Compared with previous day's height.		Height above P. W. D. datum on same date in—	
					Rise.	Fall.	1930.	1929.
Ganges .. Monghyr ..	6 a.m. ..	123·40′	0·00′	123·40′	0·30′	..	120·00′	123·90′
Ganges .. Rajmahal ..	6 „ ..	82·05′	0·00′	82·05′	0·29′	..	80·65′	82·70′
Ganges .. Goalundo ..	8-24 „ ..	25·60′	1·409′	27·009′	..	1·10′	26·509′	25·209′
Bhagirathi .. Swarupganj ..	8 a.m. ..	26·30′	0·00′	26·30′	..	0·40′	23·70′	25·95′
Brahmaputra .. Dibrugarh ..	8 a.m. ..	30·00′	302·70′	332·70′	0·40′	..	339·60′	333·16′
Brahmaputra .. Gauhati ..	....	17·40′	136·958′	153·958′	..	0·60′	164·158′	154·658′
Brahmaputra .. Serajganj ..	12-24 p.m. ..	37·10′	1·509′	38·609′	..	0·20′	42·309′	37·409′
Dhaleswari .. Sabhar ..	7 a.m. ..	21·30′	0·00′	21·30′	..	0·25′	22·10′	19·50′
Meghna .. Fenchuganj ..	7 a.m. ..	26·30′	1·509′	27·809′	Steady		28·009′	29·659′
Meghna .. Bhairab Bazar ..	6-24 „ ..	18·67′	1·61′	20·28′	..	0·17′	21·03′	17·69′
Meghna .. Chandpur ..	11-4 „ ..	11·42′	1·61′	13·03′	..	0·08′	12·78′	12·28′
Lakhya .. Narayanganj ..	7 a.m. ..	23·71′	−5·59′	18·12′	..	0·12′	17·08′	15·83′
Madaripur Bil Route .. Takerhat ..	9-24 a.m. ..	14·20′	0·00′	14·20′	..	0·15′	13·15′	12·55′
Damodar .. Edilpur ..	6 a.m. ..	5·83′	92·58′	98·41′	..	1·59′	99·33′	99·50′

Statement showing the daily gauge readings of certain rivers at the stations named below for the 3rd September 1931.

Name of river and place where readings are taken.	Hour.	Reading on gauge.	Value of zero referred to P. W. D. datum.	Height above P.W.D. datum.	Compared with previous day's height.		Height above P. W. D. datum on same date in—	
					Rise.	Fall.	1930.	1929.
Ganges .. Monghyr ..	6 a m. ..	123·60′	0·00′	123·60′	0·20′	..	119·40′	124·20′
Ganges .. Rajmahal ..	6 „ ..	82 65′	0·00′	82·65′	0·60′	..	80·20′	82·90′
Ganges .. Goalundo ..	8-24 „ ..	26·60′	1·409′	28·009′	1·00′	..	26·009′	25·109′
Bhagirathi .. Swarupganj ..	8 a.m. ..	25·91′	0·00′	25·91′	..	0·39′	26·84′	25·65′
Brahmaputra .. Dibrugarh ..	8 a.m. ..	30·50′	302·70′	333·20′	0·50′	..	338·30′	332·61′
Brahmaputra .. Gauhati ..	....	17·70′	136·958′	154·658′	0·30′	..	164·458′	154·558′
Brahmaputra .. Serajganj ..	12-24 p.m. ..	36·80′	1·509′	38·309′	..	0·30′	42·409′	37·809′
Dhaleswari .. Sabhar ..	7 a.m. ..	21·10′	0·00′	21·10′	..	0·20′	22·20′	19·30′
Meghna .. Fenchuganj ..	7 a.m. ..	26·30′	1·509′	27·809′	Steady		28·159′	29·609′
Meghna .. Bhairab Bazar ..	6-24 „ ..	18·54′	1·61′	20·15′	..	0·12′	21·28′	18·61′
Meghna .. Chandpur ..	11-49 „ ..	11·25′	1·61′	12·86′	..	0·17′	12·36′	12·28′
Lakhya .. Narayanganj ..	7 a.m. ..	23·37′	−5·59′	17·78′	..	0·34′	17·03′	15·91′
Madaripur Bil Route .. Takerhat ..	9-28 a.m. ..	14·10′	0·00′	14·10′	..	0·10′	13·10	12·40′
Damodar .. Edilpur ..	6 a.m. ..	5·62′	92·58′	98·20′	..	0·21′	98·58′	98·83′

Statement of weekly gauge readings on the river Ganges at Rampur Boalia for the week ending the 5th September 1931.

Date.	Hour.	Height of surface above zero of gauge.	Height of surface above P. W. D. datum.	Height of surface above P. W. D. datum on the same date of last year.	Remarks.
1931.					
30th August ..	7 a.m.	....	58·55	57·90	Value of zero = 0·00 P. W. D.
31st „ ..	7 „	....	58·30	57·45	
1st September ..	7 „	....	58·30	57·10	Zero of gauge referred to B. M. on Rajshahi College step ; value 64·73.
2nd „ ..	7 „	....	58·50	56·80	
3rd „ ..	7 „	....	58·70	56·50	
4th „ ..	7 „	....	58·90	56·10	
5th „ ..	7 „	....	59·00	55·65	

Highest recorded level on 26-8-1879=64·24.

Lowest recorded level on 25-4-1884=32·62.

S. M. HOSSAIN, for *Subdivisional Officer*,
Irrigation Department, Rajshahi.

RAMPUR BOALIA, *the 5th September 1931.*

CORPORATION OF CALCUTTA.

NOTICE.

Central Municipal Office, the 11th September 1931.

It is hereby notified for general information that the Corporation of Calcutta under powers vested in them in this behalf have by a resolution, dated the 31st August 1931, modified the alignment of a portion of Tangra Road affecting premises No. 21, Tangra Road in Ward No. 19 which was originally sanctioned by the General Committee of the Corporation on the 13th November 1911.

A copy of the plan prepared in this behalf may be seen in the office of the Surveyor and Valuer of the Corporation any day between 11 a.m. and 3 p.m. on payment of usual fees.

J. C. MUKERJEA,
Chief Executive Officer.

Abstract of audited accounts of the University of Dacca for 1928-29.

RECEIPTS.

Account heads.		Receipts.	Opening balance.	Total.
	Rs. A. P.	Rs. A. P.	Rs. A. P.	Rs. A. P.
Capital account		3,93,797 4 0	−28,299 0 9	3,65,498 3 3
Recurring accounts—				
I.—Grants from Government	5,91,955 0 0	....	....	....
II.—Fees (other than Examination, Athletic and Union fees)	1,31,832 6 0	....	....	....
III.—Fees for registration of graduates	40 0 0	....	....	....
IV.—Examination fees	48,607 8 0	....	....	....
V.—Athletic and union fees	10,765 0 0	....	....	....
VI.—Rents	32,723 1 9	....	....	....
VII.—Interest on investments	83,326 13 0	....	....	....
VIII.—Contributions	2,500 0 0	....	....	....
IX.—Refunds	4 11 0	....	....	....
X. Miscellaneous	13,643 6 1	....	....	....
		9,15,397 13 10	6,09,395 0 6	15,24,792 14 4
Advance and deposits		92,839 4 6	−46,355 9 9	46,483 10 9
Provident Fund		92,421 15 7	−985 3 11	91,436 11 8
University Students' Information Bureau		3,046 0 0	1,353 14 10	4,399 14 10
GRAND TOTAL		14,97,502 5 11	5,35,109 0 11	20,32,611 6 10

EXPENDITURE.

Account heads.		Expenditure.	Closing balance.	Total.
	Rs. A. P.	Rs. A. P.	Rs. A. P.	Rs. A. P.
Capital account		3,49,922 11 5	15,575 7 10	3,65,498 3 3
Recurring accounts—				
I.—Teaching staff	8,85,430 0 4	....	....	....
II.—General administration	76,922 6 5	....	....	....
III.—Library	38,730 8 2	....	....	....
IV.—Laboratories and workshop	43,486 2 2	....	....	....
V.—Halls and Residence	30,906 7 1	....	....	....
VI.—Medical Department	10,655 6 10	....	....	....
VII.—Physical Education and Discipline	4,992 14 6	....	....	....
VIII.—Buildings and Property Department	14,315 13 4	....	....	....
IX.—Provident Fund, Leave and Pension contribution	50,080 6 1	....	....	
X.—Cost of leave arrangements	11,843 3 4	....	....	....
XI.—Travelling expenses	8,954 9 0	....	....	....
XII.—General contingencies	11,742 14 2	....	....	....
XIII.—Printing charges and cost of forms	3,381 11 2	....	....	....
XIV.—University Publications	301 12 0	....	....	....
XV.—Maintenance of buildings, lands and property	33,021 2 5	....	....	....
XVI.—Municipal taxes and rents	21,368 8 6	....	....	....
XVII.—Electric and lighting charges	22,494 3 6	....	....	....
XVIII.—University studentships, scholarships, stipends and prizes	30,110 3 6	....	....	....
XIX.—Examination expenses	42,135 3 0	....	....	....
XX.—Athletics and Unions	14,385 5 0	....	....	....
XXI.—Grants and Contributions	1,800 15 2	....	....	....
XXII.—Lectures by distinguished educationists	1,629 6 0	....	....	....
XXIII.—Refunds	18 7 0	....	....	....
XXIV.—Miscellaneous	6,394 3 2	....	....	....
		8,66,200 4 10	6,58,592 9 6	15,24,792 14 4
Advance and deposits		55,367 11 6	−8,884 0 9	46,483 10 9
Provident Fund		82,247 13 10	9,188 13 10	91,436 11 8
University Students' Information Bureau		2,861 7 8	1,538 7 2	4,399 14 10
GRAND TOTAL		13,56,600 1 8	6,76,011 5 7	20,32,611 6 10

B. P. SEN,
Chief Accountant.

N. AHMAD,
Registrar.

Abstract of audited accounts of the University of Dacca for 1929-30.

RECEIPTS.

Account heads.			Receipts.	Opening balance.	Total.
	Rs. A. P.		Rs. A. P.	Rs. A. P.	Rs. A. P.
Capital Account			3,70,993 7 5	15,575 7 10	3,86,568 15 3
Recurring Account—					
I.—Grants from Government	5,78,970 0 0		....	....	....
II.—Fees (other than Examination, Athletic and Union fees)	1,36,207 12 0		....	....	....
III.—Fees for registration of graduates	1,450 0 0		....	....	....
IV.—Examination fees	43,946 4 0		....	....	....
V.—Athletic and Union fees	11,578 0 0		....	....	..
VI.—Rents	33,665 5 4		....	....	....
VII.—Interest on investments	82,998 1 0		....	....	....
VIII.—Contributions	5,700 0 0		....	....	....
IX.—Refunds	767 7 6		....	....	....
X.—Miscellaneous	5,636 13 4				
			9,00,919 11 2	6,58,592 9 6	15,59,512 4 8
Advance and deposits			71,689 5 1	−8,884 0 9	62,805 4 4
Provident fund and gratuity			96,144 7 6	9,188 13 10	1,05,333 5 4
University Students' Information Bureau			3,046 0 0	1,538 7 2	4,584 7 2
GRAND TOTAL			14,42,702 15 2	6,76,011 5 7	21,18,804 4 9

EXPENDITURE.

Account heads.			Expenditure.	Closing balance.	Total.
	Rs. A. P.		Rs. A. P.	Rs. A. P.	Rs. A. P.
Capital Account	....		4,10,786 4 0	−24,217 4 9	3,86,568 15 3
Recurring Account—					
I.—Teaching staff	4,02,251 14 9		....	....	....
II.—General administration	80,388 12 0		....	....	....
III.—Library	33,274 8 8		....	....	....
IV.—Laboratories and workshops	47,189 13 8		....	....	....
V.—Halls and Residence	33,217 4 7		....	....	....
VI.—Medical Department	10,215 2 9		....	....	....
VII.—Physical Education and Discipline	6,278 0 0		....	....	....
VIII.—Buildings and Property Department	16,948 9 0		....	....	....
IX.—Provident Fund, Leave and Pension Contribution and Gratuity.	48,045 12 8		....	....	....
X.—Cost of leave arrangements	7,173 3 0		....	....	....
XI.—Travelling Expenses	8,469 12 2		....	....	....
XII.—General contingencies	11,173 3 2		....	....	....
XIII.—Printing charges and cost of forms	2,232 0 0		....	....	....
XIV.—University Publications	4,102 10 0		....	....	....
XV.—Maintenance of buildings, lands and property	49,320 12 6		....	....	....
XVI.—Municipal taxes and rents	17,104 7 0		....	....	....
XVII.—Electric and Lighting charges	20,168 2 6		....	....	....
XVIII.—University studentships, scholarships, stipends and prizes	29,808 6 6		....	....	....
XIX.—Examination expenses	42,351 3 0		....	....	....
XX.—Athletics and Unions	12,780 2 3		....	....	....
XXI.—Grants and Contributions	1,901 6 6		....	....	....
XXII.—Lectures by distinguished educationists	1,031 3 0		....	....	....
XXIII.—Refunds	19 0 0		....	....	....
XXIV.—Miscellaneous	10,810 11 4		....	....	....
XXV.—Investment	2,12,897 0 0		....	....	....
			11,09,653 1 0	4,49,859 3 8	15,59,512 4 8
Advance and deposits			66,009 6 9	−3,204 2 5	62,805 4 4
Provident Fund and gratuity			1,02,047 7 7	3,285 13 9	1,05,333 5 4
University Students' Information Bureau			3,046 3 4	1,538 3 10	4,584 7 2
GRAND TOTAL			16,01,542 6 8	4,27,261 14 1	21,18,804 4 9

B. P. SEN,
Chief Accountant.

N. AHMAD,
Registrar.

Printed at the Bengal Government Press, Alipore, and published by the Bengal Secretariat Book Depot, Writers' Buildings, in the City of Calcutta, on the 17th September 1931.

Registered No. C207

The Calcutta Gazette

Extraordinary

THURSDAY, SEPTEMBER 17, 1931.

GOVERNMENT OF BENGAL.

Political Department.

Political.

NOTIFICATION.

No. 1097P.D.—16th September 1931.—In exercise of the powers conferred by sub-sections (*1*) and (*2*) of section 4 of the Bengal Criminal Law Amendment Act, 1925, the Governor in Council is pleased to appoint:—

(1) Mr. A. N. Sen, District and Sessions Judge, Faridpur,

(2) Mr. Bipin Bihari Mukherji, Retired District and Sessions Judge,

(3) Khan Bahadur Maulvi Abu Ali Muhammad Chaudhuri, Deputy Magistrate and Deputy Collector, Chittagong,

as Commissioners for the trial under the said Act of—

(1) Nibaran Ghose, son of Dwarka Ghose, of Barasa Ighar, police-station Debiduar, district Tippera, at present Chittagong town,

(2) Chandra Kumar Bose, son of Baidya Nath Bose, of Khasghar, police-station Muradnagar, district Tippera, at present Chittagong town,

(3) Ardhendu Guha, son of Sarada Guha, Sadarghat, police-station Kotwali, district Chittagong,

(4) Sushil Kumar Sen, son of Surendra Lal Sen, of Dewan Bazar, police-station Kotwali, district Chittagong,

(5) Prafulla Ranjan Mallik, son of Rasik Mallik, of Goshaildanga, police-station Double-Moorings, district Chittagong,

(6) Nishi De, son of Jitu Ram De, of Goshaildanga, police-station Double-Moorings, district Chittagong,

(7) Rabindra Narayan Sen, son of Sashi Kumar Sen, of Saroatali, police-station Boalkhali, district Chittagong,

(8) Probhat Ranjan Dutt, son of Nagendra Nath Dutt, of Jamalkhan, police-station Kotwali, district Chittagong,

(9) Hriday Ranjan Das, son of Nityananda Das, of Popadia, police-station Boalkhali, district Chittagong,

(10) Ashutosh De, son of Ram Ratan De, of Paraikora, police-station Anwara, district Chittagong,

(11) Anil Kumar Rakhit, son of Ajesh Rakhit, of Joara, police-station Patiya, district Chittagong,

accused of offences specified in the first schedule to the said Act.

The Governor in Council is also pleased in exercise of the power conferred by rule 2 (*a*) of the rules under section 10 of the said Act (published under notification No. 332P., dated the 15th January 1931) to nominate the said Mr. A. N. Sen to be the President of the aforesaid Commissioners.

R. N. Reid,

Chief Secy. to the Govt. of Bengal (offg.).

Printed at the Bengal Government Press, Alipore, and published by the Bengal Secretariat Book Depot, Writers' Buildings, in the City of Calcutta, on the 17th September 1931.

Registered No. C207

The Calcutta Gazette

Extraordinary

MONDAY, SEPTEMBER 21, 1931.

GOVERNMENT OF BENGAL.

Finance Department.

Miscellaneous.

NOTIFICATION.

No. 5503-Misc.—21st September 1931.—Under section 25 of the Negotiable Instruments Act, XXVI of 1881, the Governor in Council is pleased to declare that Tuesday, the 22nd September 1931, shall be a public holiday.

E. N. BLANDY,
Secy. to the Govt. of Bengal.

Printed at the Bengal Government Press, Alipore, and published by the Bengal Secretariat Book Depot, Writers' Buildings, in the City of Calcutta, on the 21st September 1931.

Registered No. C207

The Calcutta Gazette

Extraordinary

TUESDAY, SEPTEMBER 22, 1931.

GOVERNMENT OF BENGAL.

Finance Department.

Miscellaneous.

NOTIFICATION.

No. 5524-Misc.—22nd September 1931.—Under section 25 of the Negotiable Instruments Act, XXVI of 1881, the Governor in Council is pleased to declare that Wednesday and Thursday, the 23rd and 24th September 1931, shall be public holidays.

E. N. BLANDY,
Secy. to the Govt. of Bengal.

Printed at the Bengal Government Press, Alipore, and published by the Bengal Secretariat Book Depot, Writers' Buildings, in the City of Calcutta, on the 22nd September 1931.

Registered No. C207 *No. 39 of 1931.*

The Calcutta Gazette

THURSDAY, SEPTEMBER 24, 1931.

CONTENTS:

	PAGE.
PART I.—Orders and Notifications by the Governor of Bengal, the Government of Bengal, the High Court, Government Treasury, etc.	1137—1182
PART IA.—Orders and Notifications by the Government of India republished for general information	275—281
PART IB.—Educational Notices ..	915—994
PART II.—Advertisements	881—898
PART III.—Acts of the Bengal Legislative Council	*Nil*
PART IV.—Bills introduced in the Bengal Legislative Council, Reports of Select Committees presented or to be presented to that Council, and Bills published before introduction in that Council ..	*Nil*
PART V.—Acts of the Indian Legislature assented to by the Governor General and Ordinances promulgated under section 72 of the Government of India Act ..	*Nil*
PART VI.—Bills introduced in the Council of State and Legislative Assembly, Reports of Select Committees presented to the Council and Assembly and Bills published under Rule 18 of the Indian Legislative Rules	*Nil*
SUPPLEMENT No. 39—	
Provincial and Central Co-operative Banks	1205—1229
Annual Report of the Royal Botanic Gardens and the Gardens in Calcutta and of the Lloyd Botanic Garden, Darjeeling, for 1930-31	1230—1234
Report of the Honorary Committee for the management of the Zoological Garden, Calcutta, for the year 1930-31	1235—1245
Cotton Ginning and Pressing—Corporation of Calcutta Notice—Weekly Vital Statistics—Monthly Weather and Crop Report—Weekly Weather and Crop Report—Daily gauge-readings—Weekly gauge-readings	1246—1262

Part I

Orders and Notifications by the Governor of Bengal, the Government of Bengal, the High Court, Government Treasury, etc.

ORDERS BY THE GOVERNMENT OF BENGAL.

No. 8523A.

Appointments and Transfers.

GENERAL.

Calcutta.—No. 1469A.D.—14th September 1931.—The services of Mr. N. L. Hindley, I.C.S., on leave, are placed at the disposal of the Hon'ble the Chief Justice of the High Court of Calcutta.

Presy. Divn.—No. 1474A.D.—14th September 1931.—Babu Birendra Lal Gupta, Sub-Deputy Collector, on leave, is posted to the Presidency Division.

Mymensingh.—No. 1487A.D.—15th September 1931.—Babu Prabodh Chandra Mazumdar, Deputy Magistrate and Deputy Collector, Jamalpur, Mymensingh, is appointed to have charge of that subdivision, during the absence, on leave, of Mr. Subimal Dutt, I.C.S., or until further orders.

Burdwan-Midnapore.—No. 1516A.D. — 15th September 1931.—Mr. Ashutosh Ray, Additional District and Sessions Judge, Burdwan and Midnapore, is appointed to act, in addition to his own duties, as District and Sessions Judge, Midnapore, during the absence, on leave, of Mr. K. C. Nag, M.B.E., or until further orders.

Jessore.—No. 1529A.D.—16th September 1931.—Babu Jatindra Mohan Chatarji, No. II, Deputy Magistrate and Deputy Collector, on probation, Jessore, is appointed temporarily to have charge of the Sadar subdivision of that district.

Faridpur.—No. 1541A.D.—17th September 1931.—Babu Gaur Krishna Basu, officiating Additional District and Sessions Judge, Faridpur, is appointed temporarily to act as District and Sessions Judge of that district.

Bakarganj.—No. 1562A.D.—18th September 1931.—Mr. H. S. E. Stevens, I.C.S., on leave, is appointed to be Magistrate and Collector, Bakarganj.

Burdwan Divn.—No. 8451A.—19th September 1931.—The orders of the 9th September 1931, posting Babu Sharat Chandra Guha, Sub-Deputy Collector, to the Burdwan Division, are cancelled.

Mymensingh.—No. 8502A.—21st September 1931.—Babu Upendra Mohan Basu, Deputy Magistrate and Deputy Collector, on leave, is posted to the headquarters station of the Mymensingh district.

Midnapore.—No. 8505A.—21st September 1931.—Mr. H. L. Fell, Deputy Magistrate and Deputy Collector, on leave, is posted to the headquarters station of the Midnapore district.

Noakhali.—No. 8508A. — 21st September 1931.—Maulvi Panaullah Ahmad, Deputy Magistrate and Deputy Collector, on leave, is posted to the headquarters station of the Noakhali district.

Noakhali-Bakarganj. — No. 8511A.—21st September 1931.—Babu Niranjan Mohan Bardhan, Deputy Magistrate and Deputy Collector, Noakhali, is transferred to the Pirojpur subdivision of the Bakarganj district.

ECCLESIASTICAL.

Calcutta.—No. 8255A. — 14th September 1931.—The services of the Reverend Donald Macdonald, Second Chaplain of St. Andrew's Church, Calcutta, are placed at the disposal of the Government of India in the Department of Commerce.

Calcutta.—No. 8454A. — 19th September 1931.—In exercise of the power conferred on him by section 3 of Act V (B.C.) of 1881, the Governor in Council is pleased to appoint the Reverend W. Craig-Eadie, Minister of the Carey Baptist Church, Calcutta, to be a member of the Christian Burial Board for the town and suburbs of Calcutta, *vice* Reverend Herbert Anderson, resigned.

Leave.

GENERAL.

Bakarganj.—No. 1478A.D.—14th September 1931.—Mr. J. T. Donovan, C.I.E., I.C.S., Magistrate and Collector, Bakarganj, is allowed leave for twelve months, viz., leave on average pay for three months and eighteen days, under rule 81 (*b*) (*i*) of the Fundamental Rules, with effect from the 4th September 1931, and leave on half average pay for the remaining period, under rule 81 (*d*) of those Rules.

Mymensingh.—No. 1484A.D.—15th September 1931.—Mr. Subimal Dutt, I.C.S., Joint Magistrate and Deputy Collector, Jamalpur, Mymensingh, is allowed leave on average pay from the 27th October to the 7th November 1931, inclusive, under rule 81 (*b*) (*ii*) of the Fundamental Rules.

Midnapore.—No. 1510A.D.—15th September 1931.—Babu Jogesh Chandra Chaudhuri, Deputy Magistrate and Deputy Collector, Midnapore, is allowed leave on average pay for four months, under rule 81 (*b*) (*ii*) of the Fundamental Rules, with effect from the 27th October 1931.

Midnapore.—No. 1513A.D.—15th September 1931.—Mr. Khagendra Chandra Nag, M.B.E., District and Sessions Judge, Midnapore, is allowed leave on average pay for twenty days, under rule 81 (*b*) (*ii*) of the Fundamental Rules, with effect from the 21st September 1931.

Mymensingh.—No. 1519A.D.—15th September 1931.—Babu Hemendra Nath Nandi, Deputy Magistrate and Deputy Collector, Mymensingh, is allowed leave on average pay for three months, under rule 81 (*b*) (*ii*) of the Fundamental Rules, with effect from the date on which he may be relieved.

Burdwan.—No. 8234A. — 14th September 1931.—Babu Monoranjan Sarkar, Deputy Magistrate and Deputy Collector, on probation, Burdwan, is allowed leave on average pay for twelve days, under rule 81 (*b*) (*ii*) of the Fundamental Rules, with effect from the 27th October 1931.

Midnapore.—No. 8252A.—14th September 1931.—Babu Jyotish Chandra Chatarji, Deputy Magistrate and Deputy Collector, Midnapore, is allowed leave on average pay, under rule 81 (*b*) (*ii*) of the Fundamental Rules, from the 27th October 1931 to the 7th November 1931, inclusive.

Rajshahi.—No. 8374A. — 15th September 1931.—Maulvi Saiyid Abdul Majid, Deputy Magistrate and Deputy Collector, employed as Deputy Superintendent of Census, Rajshahi, is allowed leave on average pay for four months, under rule 81 (*b*) (*ii*) of the Fundamental Rules, with effect from the 1st October 1931, or any subsequent date on which he may be relieved.

Bakarganj.—No. 8384A.—16th September 1931.—Babu Shailendra Nath Mitra, Deputy Magistrate and Deputy Collector, employed as Deputy Superintendent of Census, Bakarganj, is allowed leave on average pay for three months, under rule 81 (*b*) (*ii*) of the Fundamental Rules, with effect from the 15th September 1931, or any subsequent date on which he may be relieved.

Chittagong.—No. 1559A.D.—18th September 1931.—Babu Kanti Chandra Mukharji, Deputy Magistrate and Deputy Collector, Chittagong, is allowed privilege leave for four months, under article 260 of the Civil Service Regulations, with effect from the 27th October 1931.

Hooghly.—No. 8425A. — 18th September 1931.—Babu Haran Chandra Sen, Deputy Magistrate and Deputy Collector, Serampore, Hooghly, is allowed leave on average pay up to the 7th November 1931, under rule 81 (*b*) (*ii*) of the Fundamental Rules, with effect from the 27th October 1931.

Khulna.—No. 8428A. — 18th September 1931.—Maulvi Serajul Karim, Deputy Magistrate and Deputy Collector, on probation, Khulna, is allowed leave on average pay for five days, under rule 81 (*b*) (*ii*) of the Fundamental Rules, with effect from the 27th October 1931.

No. 8448A.—19th September 1931.—Babu Sharat Chandra Guha, Sub-Deputy Collector, is allowed leave for three months, viz., leave on average pay for two days, under the proviso to rule 81 (*b*) (*ii*) of the Fundamental Rules, and leave on half average pay for the remaining period, under rule 81 (*d*) of those rules, in extension of the leave granted to him under the orders of the 19th May 1931.

POLICE.

Calcutta.—No. 8397A. — 16th September 1931.—Rai Bhupendra Nath Banarji Bahadur, Deputy Commissioner of Police, Calcutta, is allowed leave on average pay from the 27th October to the 7th November 1931, inclusive, under rule 81 (*b*) (*ii*) of the Fundamental Rules.

R. N. REID,

Chief Secy. to the Govt. of Bengal (offg.).

NOTIFICATIONS.

No. 8263A.—15th September 1931.—In exercise of the powers conferred by rule 15 of the Bengal Electoral Rules, the Governor in Council is pleased to direct that the following amendment shall be made in the Bengal Electoral Regulations published with notification No. 1627A.R., dated the 11th August 1923, namely:—

In Forms VI and VII, annexed to the said Regulations in the Form of back of Ballot Paper, for the words and brackets "(or who has been identified to my satisfaction)" the following shall be substituted, namely:—

[or who has been identified to my satisfaction by

(Name)..... .....

(Address).....]".

No. 8545A.—22nd September 1931.—In pursuance of Rule IX of the Bengal Provincial Services Recruitment Rules* published in notification No. 7183A., dated the 22nd May 1930, the Government of Bengal are pleased to notify the following particulars and instructions regarding the direct appointments to be made in 1932 to the Bengal Civil Service (Executive):—

1. **Vacancies.**—The following vacancies will be filled by direct appointments:—

Bengal Civil Service (Executive)	...	...	6

In addition to these appointments four appointments in the Upper Division of the Bengal Secretariat clerical service will be available to candidates who qualify for appointment to the abovenamed service but whose places in the list are not sufficiently high to enable them to secure appointments.

Under the terms of the Finance Department Resolution No. 3219F., dated the 7th August 1931, the new recruits will on first appointment be appointed on a provisional basis and draw as initial pay that at present sanctioned minus 15 per cent. No direct appointment will be made to the Bengal Police Service, the Bengal Excise Service, the Bengal Junior Civil Service or the Bengal Junior Excise Service.

Each candidate will be required to specify in his application the service or services for which he desires to compete, placing them in the order of his preference, and *the choice thus indicated will be final.* Appointments will be assigned to successful competitors with due consideration of their choice and the number of vacancies in the services.

2. **Method of recruitment.**—The appointments will be made by competitive examination in the manner prescribed in Part B of Schedule II of the Bengal Provincial Services Recruitment Rules.

3. **Qualifications.**—The indispensable qualifications of a candidate are—

(*i*) that he is a native of Bengal or has a permanent domicile within the Presidency of Bengal;

(*ii*) that he is a natural born subject of His Majesty, or of an Indian State in respect of whom the Governor General in Council has made a declaration under section 96A of the Government of India Act;

(*iii*) that he shall have attained the age of 22 and shall not have attained the age of 25 on the 1st October 1931;

(*iv*) that he is a graduate of a recognised University;

(*v*) that he is of good character; and

(*vi*) that he is of sound health, good physique, active habits and free from organic defect or bodily infirmity.

Along with his application every candidate shall submit proof of his age as explained in the form of application and certificates, written not more than one year prior to the date of his application, from two responsible persons unconnected with his College or University, and not related to him, testifying to his private character and stating that he is a native of or has a permanent domicile within the Province of Bengal.

4. **Applications—Method of submission of fee, etc.**—(*i*) A person desiring to be admitted to the examination shall apply before the 15th November 1931 to the head of the college from which he passed his

* Copies of these Rules (price annas six) are obtainable from the officer in charge, Book Depot, Bengal Secretariat, Calcutta.

examination for the degree of Bachelor of Arts, Science, Commerce, etc. A candidate who passed the examination as a non-collegiate student shall send in his application to the Registrar, Calcutta University, together with a certificate of character signed by the Principal of his college if he was connected with one, and by the Magistrate of the district in which he is resident in other cases; candidates from the Dacca University shall apply to the Registrar, Dacca University. All other candidates (not included in the previously mentioned categories) shall apply to the Director of Public Instruction, Bengal:

Provided that in no case shall a candidate apply to more than one of these authorities, and that such application shall always be made through their Durbars by persons resident in a State in India.

(ii) Applications shall be made, in the form shown in Schedule I, copies of which may be obtained from the heads of colleges, the Registrars of the Calcutta and Dacca Universities, and the Director of Public Instruction.

(iii) No application will be taken into consideration by the receiving authority unless it is accompanied by non-judicial stamps of the value of Rs. 5 or a chalan showing payment into a Government treasury in Bengal of the sum of Rs. 5. This payment is obligatory whether such application is subsequently rejected or not. Applications stamped with postage stamps will not be accepted.

5. **Selection Committee.**—The Government of Bengal will appoint a Selection Committee to examine the applications of nominated candidates and their eligibility for admission to the examinations. This Committee will be composed of officials and non-officials in equal numbers and will be presided over by a high officer of Government.

6. **Nomination.**—The heads of colleges, the Registrars of the Calcutta and Dacca Universities, and the Director of Public Instruction, Bengal, shall forward to the Selection Committee before the 30th November 1931, the applications of candidates nominated in accordance with the allotment of nominations shown in Schedule II and shall certify the moral character of each candidate so nominated. The application of non-collegiate students nominated by the Registrar of the Calcutta University should be supported by the character certificates mentioned in paragraph 3 above. In making these nominations, due regard should be paid to the desirability of different classes and communities being represented in the public service. Care should be taken to nominate only such candidates as are likely to pass the medical examination since experience shows that a considerable number of candidates successful in the literary examination fail to pass the medical test.

7. **Selection certificates.**—In order to make the appraisement of individual merits of candidates possible, the Selection Committee shall issue certificates of selection to such of the nominated candidates, not exceeding 200 in all, as it considers qualified to appear at the examination. The selection or rejection of a candidate by the Selection Committee shall be final, and no candidate shall be admitted to the examination unless he holds such a certificate:

Provided that in making their choice the Selection Committee shall give all possible consideration to the cases of candidates of the minority communities and the backward classes and shall call for further nominations from the heads of colleges or Commissioners of Divisions if the number of selected Muhammadan candidates does not reach 45 per cent. of the total number selected.

8. **Particulars of candidates.**—The Selection Committee may require such further proof or particulars from the candidates as it may consider necessary, and may make enquiries regarding their character and domicile.

9. **Examination fee and time-table.**—Every candidate to whom a certificate of selection has been issued will, within a week from the date of its receipt, deposit in the nearest treasury in Bengal a sum of Rs. 50 as examination fee and forward the receipt for the same to the Secretary to the Selection Committee. No part of the fee will be returnable to a candidate. Delay in this respect may render a candidate's name liable to removal from the list of examinees. On complying with this requirement, the candidates will receive from the Secretary a time-table for the examination. The examination will commence on the 15th February 1932 and will be held at the Presidency College, Calcutta.

10. **Canvassing.**—Any attempt on the part of a candidate to enlist support for his application through persons of influence or officials of Government will disqualify him for appointment. Spontaneous recommendations from persons interested in the candidates, or otherwise known to them, will be disregarded.

11. **Ineligibility of Government servants.**—Unless specially exempted by Government by general or special order, no person holding a substantive appointment in Government service is eligible to appear at the competitive examinations. Whenever such exemption is granted, the candidate will be subject to selection by the Selection Committee, as if he were duly nominated under paragraph 6 above.

12. **Syllabus of examination and marks.**—The examinations will be held in the subjects and according to the syllabus shown in Schedule III which also indicates the numerical value to be attached to each paper at the examination.

As the possession of a knowledge of a provincial vernacular is an essential condition of appointment, candidates, whose ordinary spoken and written language is not Bengali, must take up translation from English into one of the provincial vernaculars named below:—

(*i*) Bengali, (*iii*) Urdu,

(*ii*) Hindi, (*iv*) Nepali,

and *vice versa* in the compulsory paper. Successful candidates, however, who have offered any language other than Bengali in that paper and are appointed to a service for which there is a Departmental Examination, will be required to pass completely the Departmental Examinations in Bengali within two years of the date of their appointment to the service.

13. **Medical Examination.**—As soon as the results of the examinations have been declared, a proportion of the candidates who have qualified will be called upon to appear before a Medical Board for a certificate of their fitness for Government Service in form A of Schedule IV of the Bengal Provincial Services Recruitment Rules. An order to appear before the Medical Board must not however be understood to mean that the candidate, if found fit, will necessarily receive an appointment as the number of candidates who will be summoned for medical examination will be slightly in excess of the total number of vacancies, and the question of his appointment will depend upon the results of the medical examination taken as a whole. The regulations governing the physical examination of candidates are set forth in Schedule IV of the Bengal Provincial Services Recruitment Rules and intending candidates are advised before they apply for admission to the examination to satisfy themselves that they are likely to qualify as physically fit under those regulations, for recent experience has shown that a considerable number of the candidates at the competitive examinations are subsequently rejected by the Medical Board as unfit.

R. N. REID,

Chief Secy. to the Govt. of Bengal (offg.).

SCHEDULE I.

Write your surname here.....

Application form.

For the use of candidates seeking admission to the competitive examination for appointment to any of the following services:—

The Bengal Civil Service (Executive).
The Bengal Police Service.
The Bengal Excise Service.
The Bengal Junior Civil Service.
The Bengal Junior Excise Service.

N.B.—1. Copies of the form may be obtained on application to the Principals of Colleges, Registrars of the Calcutta and Dacca Universities, and the Director of Public Instruction.

2. Before filling up the form the candidate should verify from the rules and the syllabus that he is eligible for admission to the examination.

3. The form should be filled up in the candidate's own handwriting and returned **by 15th November 1931** to the Principal of the College by collegiate students, to the Registrar, Calcutta University, by non-collegiate students, to the Registrar, Dacca University, by candidates from that University, and to the Director of Public Instruction, by all other candidates.

Applications received after the prescribed date will not be accepted.

4. If a candidate who fills up and returns the application form does not receive an acknowledgment for the same within a reasonable time, he should at once communicate the fact to the authority to whom the form was returned.

5. Should any of the particulars furnished be found to be false within the knowledge of the candidate, he will, if appointed, be liable to be dismissed. The wilful suppression of any material fact will also be similarly penalized.

6. Every candidate must submit with his application form a copy of his Matriculation certificate duly attested by a Magistrate or other responsible person. If the Matriculation certificate does not contain sufficient particulars to show that the candidate is qualified by age to enter for the examination, a certificate from the candidate's University or College showing his date of birth as recorded on entering the University or College must also be furnished. The age of a candidate as recorded on entering his University is regarded as correct unless there is a proof to the contrary. If a candidate claims that his age is other than as so recorded he must submit with this application the evidence on which he bases his claim. In such a case the Selection Committee will require among other evidence a satisfactory explanation of the circumstances in which a wrong age was recorded at the time of entry into the University. They will also require a statement of any attempts made by the candidate to have the University record amended and of the results of such attempts. The statement of age must tally with the statement of age made in any previous application of this nature and will be deemed absolutely final. No revision of such a declaration will be allowed at a later period for any purpose whatever.

7. Every candidate must submit with his application non-judicial stamps of the value of Rs. 5 or a chalan showing payment into a Government treasury in Bengal of the sum of Rs. 5. No part of this fee will be returnable to any applicant, whatever the result of his application. Applications unaccompanied by the fee, or stamped with postage stamps, will be ignored.

---

1. Name in full and degree.

---

2. Postal address in full. (Any change of address should be at once communicated to the candidate's nominating authority.)

---

3. State your—

(a) exact date of birth.
(b) age last birthday.

4. State your—

(a) place of birth.
(b) permanent residence.
(c) home district.

5. State your—

(a) nationality at birth.
(b) religion.
(c) caste.

6. State your father's—

(a) name.
(b) place of birth.
(c) nationality at birth.

7. State your father's—

(a) postal address.
(b) profession (if dead, give last address).

8. State your mother's—

(a) place of birth.
(b) nationality at birth.

9. Name in order the schools attended since the age of 12, giving addresses with dates of entering and leaving.

10. State your age on finally quitting school.

11. (*a*) Name your University and College.

(*b*) Give the dates of entering and leaving.

(*c*) State any degrees, honours or prizes obtained, and the year of graduation.

(*d*) State the class in which you were placed in the case of a Master's degree or a Bachelor's degree with honours.

12. Give the name of the Vice-Chancellor or Principal or Professor who can vouch for your character.

13. If the time since leaving school is not fully accounted for by the replies given above, account for the remainder here with dates.

If you have been in employment at any time state the names and addresses of your employers.

14. Give the names, professions and present addresses (in full) of the two referees from whom you submit certificates as to your character and domicile.

15. (*a*) Are you free from pecuniary embarrassments ?

(*b*) If you are under liability to repay money advanced by an institution or party for your education, state the particulars.

---

16. (*a*) Have you appeared at any previous examination for Government service ?

(*b*) If so, state—

(*i*) when

(*ii*) for what appointment ?

---

17. Have you applied for admission to any other examination (*e.g.*, Indian Audit and Accounts Service examination, Railway Service examination etc.) during the year ?

---

18. (*a*) Have you previously been rejected for any appointment in Government service ?

(*b*) If so, state—

(*i*) whether you were rejected on the result of a medical examination and if so on what occasions you were rejected and for what service you were competing.

(*ii*) If you were not rejected on the result of a medical examination on what occasions you were rejected and for what reasons if known.

---

19. For which service do you desire to compete ? If for more than one state the order of your preference.

Signature.....

Date.....

Declaration of choice of subjects for examination.

Place your initials against the subjects in which you wish to be examined if you are chosen for admission to the examination and state the language you choose for compulsory translation. A candidate having once made a declaration as to the optional subjects which he wishes to take up for examination will not be permitted, except for very special reasons, to alter his choice of subjects, and in no circumstances will any such application be considered which reaches the Director of Public Instruction after the 1st of January 1932. Refer for guidance to the accompanying syllabus:—

Initials.	Subjects.	Maximum marks.
..	(1) English Literature	300
..	(2) Mathematics	300
..	(3) Physics	300
..	(4) Chemistry	300
..	(5) Classical language	300
	(*a*) Latin.	
	(*b*) Greek.	
	(*c*) Sanskrit.	
	(*d*) Arabic.	
	(*e*) Persian.	
	(*f*) Pali.	
	(*g*) Urdu (for those whose mother-tongue it is not).	
..	(6) History	300
..	(7) Philosophy	300
..	(8) Economics	300
..	(9) Botany	300
..	(10) Geology	300
..	(11) Physiology	300
..	(12) Zoology	300
..	(13) History of Islam	300
..	(14) Constitutional History of England and The Empire ..	150
..	(15) Ancient Indian History and Culture	150
..	(16) Political Theory and Political Organisation	150
..	(17) International Law	75
..	(18) Roman Law	75
..	(19) Jurisprudence and Principles of Legislation	75
..	(20) English Constitutional Law	75
..	(21) Hindu Law	75
..	(22) Muhammadan Law	75
..	(23) Anthropology	150
..	(24) Comparative Philology	150
..	(25) Bengali Language and Literature	150
..	(26) Commercial Law	75
..	(27) Statistics	75
..	(28) Geography	150

My ordinary spoken and written language is..... and the language which I wish to offer for compulsory translation is..... .....I took up.....as my vernacular at the University examinations.

Signature.....

Date.....

SCHEDULE II.

Statement showing the allotment of nominations for admission to the competitive examination for appointment to the Bengal Civil Service (Executive), the Bengal Police Service, the Bengal Excise Service, the Bengal Junior Civil Service and the Bengal Junior Excise Service.

(*a*) *For collegiate students.*

(1) Dacca University (representing the three Halls of the University)	50
(2) Presidency College	45
(3) Scottish Churches College	25
(4) City College	16
(5) Rajshahi College	16
(6) St. Xavier's College	12
(7) Islamia College, Calcutta	12
(8) Krishnath College, Berhampore	6
(9) Ripon College	6
(10) St. Paul's College	6
(11) Braja Mohan College, Barisal	6
(12) Bangabasi College	6
(13) Vidyasagar College	8
(14) Carmichael College, Rangpur	6
(15) Chittagong College	12
(16) Ananda Mohan College, Mymensingh	6
(17) Hooghly College	6
(18) Wesleyan College, Bankura	4
(19) Ashutosh College	2
(20) Krishnagar College	4
(21) Victoria College (Comilla)	4
(22) Victoria College (Cooch Behar)	2
(23) Daulatpur Hindu Academy	2
(24) Sanskrit College	2
(25) Serampore College	2
(26) Rajendra College, Faridpur	2
(27) Bagerhat College	2
(28) Krishnachandra College, Hetampur	2
(29) Midnapore College	2
(30) Feni College	2
(31) Edward College, Pabna	2
(32) Burdwan Raj College	2

(*b*) *For non-collegiate and other students.*

(33) Calcutta University (for non-collegiate students)	16
(34) Director of Public Instruction, Bengal (for other students, *i.e.*, for Bengali students who graduated from Colleges outside Bengal) ..	4

SCHEDULE III.

Syllabus for the competitive examination for appointment to the Bengal Civil Service (Executive), the Bengal Police Service, the Bengal Excise Service, the Bengal Junior Civil Service and the Bengal Junior Excise Service.

I.—Compulsory subjects—

		Maximum marks.
1.	(*a*) Translation from English into Bengali, Hindi, Urdu, Nepali, French or German	100
	(*b*) Translation from Bengali, Hindi, Urdu, Nepali, French or German into English	100
2.	English Composition	200
3.	Elementary Mathematics (chiefly problems)	200
4.	General paper	200
	Total	800

Students whose ordinary spoken and written language is not Bengali will be required to take up translation from one of the four Indian vernaculars mentioned above (*viz.*, Bengali, Hindi, Urdu, Nepali) into English and *vice versa*. Only those whose spoken and written language is Bengali are allowed to take up French or German in the compulsory subjects.

There will be one paper in each of the compulsory subjects. No candidate will be considered for an appointment unless he secures 33⅓ per cent. of the marks in each of the first two compulsory subjects, and if he fails to secure 25 per cent. of the marks in any of the other two compulsory subjects he will score no marks in that subject.

II.—Optional subjects—

		Maximum marks.
	Any two or more of the following: provided that the total number of marks obtainable under this head must not exceed 600.	
1.	English Literature	300
	(*a*) General History of English Literature .. 150	
	(*b*) English Literature from 1832 to the present day 150	
2.	Mathematics	300
	(*a*) Pure 150	
	(*b*) Mixed 150	
3.	Physics	300
	(*a*) General, Heat, Light 150	
	(*b*) Magnetism, Electricity 150	
4.	Chemistry	300
	(*a*) Inorganic 150	
	(*b*) Organic 150	
5.	One classical language chosen from Latin, Greek, Sanskrit, Arabic, Persian, Pali or Urdu (for those whose mother-tongue it is not)	300
	(*a*) Translation 150	
	(*b*) Language, Literature and Grammar .. 150	
6.	History	300
	(*a*) Indian 150	
	(*b*) English and European 150	
7.	Philosophy	300
	(*a*) Metaphysics and Ethics 150	
	(*b*) Psychology 150	
8.	Economics	300
	(*a*) Political Economy 150	
	(*b*) Economic History and application to India .. 150	
9.	Botany	300
	(*a*) and (*b*) Two papers .. .. .. 150 each	
10.	Geology	300
	(*a*) and (*b*) Two papers .. .. .. 150 each	

II.—Optional subjects—

		Maximum marks.
11.	Physiology	300
	(*a*) and (*b*) Two papers .. .. .. 150 each	
12.	Zoology	300
	(*a*) and (*b*) Two papers .. .. .. 150 each	
13.	History of Islam	300
	(*a*) General Islamic History 150	
	(*b*) Islamic Philosophy and Culture 150	
14.	Constitutional History of England and the Empire 150	
15.	Ancient Indian History and Culture 150	
16.	Political Theory and Political Organization .. 150	
17.	Anthropology 150	
18.	Comparative Philology 150	
19.	Bengali Language and Literature 150	
20.	Geography 150	
21.	International Law 75	
22.	Roman Law 75	
23.	Jurisprudence and Principles of Legislation .. 75	
24.	English Constitutional Law 75	
25.	Hindu Law 75	
26.	Muhammadan Law 75	
27.	Commercial Law 75	
28.	Statistics 75	

(*i*) There will be two papers in each of the optional subjects 1-13 and one paper only in each of the remaining subjects. Candidates who select as their optional subjects Physics, Chemistry, Botany, Geology, Physiology or Zoology and have not produced evidence that they possess a degree in the subject or subjects selected will be required to pass a practical test. If they fail to satisfy the examiners in this test they will earn no marks in the whole subject.

(*ii*) If a candidate fails to secure 25 per cent. of the marks in any one of the optional subjects selected he shall score no marks in that subject.

(*iii*) Candidates will also be liable to undergo a *viva voce* examination if so required by the examiners.

(*iv*) In awarding marks in all the subjects the candidate's knowledge of English, as shown by the answers, will be taken into account.

(*v*) Ten per cent. of the marks obtained in any paper will be subject to deduction for bad writing and untidiness.

(*vi*) The following details may prove helpful to a candidate as indicating the standard and nature of the examination:—

I.—COMPULSORY SUBJECTS.

1.—Translation and Retranslation.

The examination will be directed to test not the extent of the candidate's knowledge of any literature (English, Bengali, Hindi, Urdu, Nepali, French or German), but only facility in rendering from one language into another with reasonable accuracy and elegance. In the case of candidates whose ordinary written and spoken language is not Bengali and who did not take up Bengali as their vernacular at the University examinations the tests in this paper will be equivalent to the tests in the subject prescribed in the rules for the lower standard of the Departmental Examination in Bengali for Civil officers, and such candidates will after appointment and before confirmation be required to pass the Departmental Examination by the higher standard in Bengali.

2.—English Composition.

Questions will be set to test the candidate's power of writing clear and expressive English. They will include letter-writing on given subjects, the rapid summarisation of the subject matter of passages in prose of about 500-600 words in length and the detailed paraphrase of poetry.

The general standard of the subject matter will be that of the pass B.A. degree of an Indian University.

3.—Elementary Mathematics.

Vulgar and Decimal Fractions. Ratio and Proportion. Areas and Volumes of Simple Figures and Solids. Percentages. Simple Interest. Easy Factors. Simple Equations. Graphs of Simple Equations and of Sets of Data. Elementary Geometry of the Straight Line, Triangle and Circle.

The paper will consist largely of Problems with Arithmetical Data.

4.—General Paper.

Questions will be set on current topics, general history or similar subjects with which an educated candidate should be acquainted.

II.—OPTIONAL SUBJECTS.

1.—English Literature.

(*a*) General history of English literature. Questions will be set to test the candidate's knowledge of the more important works of the greater writers from (and including) Chaucer to the present day.

(*b*) English literature from 1832 to the present day. Candidates will be expected to know the work of the greater writers of the age, and to be able to understand such literature in relation to the main social and historical developments of the age.

Note.—In either paper, questions on the history of literary forms, style and prosody will not be excluded.

2.—Mathematics.

(a) Pure.

(*i*) *Algebra.*

Binomial theorem.
Convergency, divergency, and summation of series.
Variation.
Theory of limits.
Inequalities.
Continued fractions.
Determinants.
Elementary theory of equations including the approximate solution of numerical equations.

(*ii*) *Geometry.*

Geometry of the triangle, circle and conic sections.

Analytical Geometry of the straight line and conic sections.

Trigonometry: circular and hyperbolic functions: properties of triangles: summation of series: De Moivre's theorem: factorisation: expansion of the circular and hyperbolic functions in series.

Geometry of three dimensions: plane straight line: conicoids: generating lines of conicoids: curvature of surfaces.

(*iii*) *Differential and integral calculus.*

Theory of limits: differentiation: maxima and minima: summation of series: partial differentiation: integration: definite integrals: reduction formulæ: differential equation of the first and second orders; Fourier's series: applications to the geometry of curves.

(b) Mixed.

(i) Statics.

Statics of single particle.
Statics of systems of particles.
Friction.
Centre of mass.
Principle of virtual work.
Equilibrium of strings.
Machines.

(ii) Dynamics of a particle.

Velocity, acceleration, laws of motion.

Projectiles.

Impact.

Work and energy.

Motion of a particle in a plane under the influence of forces: orbits.

(iii) Hydrostatics.

Fluid pressure: centre of pressure on curved surfaces.

Conditions of equilibrium of a floating body.

Theory of the Metacentre.

Hydraulic and pneumatic machines.

(iv) Astronomy.

Elementary spherical trigonometry: refraction: parallax: precession: nutation: aberration: the sun and the moon: eclipses: measurement of time: the equation of time: determination of latitude and longitude: sextant: the principal instruments in an observatory: descriptive discussion of the principal constellations: comets: nebulas.

3.—Physics.

(a) General, Heat and Light.

(i) General Properties of matter.

Gravitation, elasticity, viscosity, surface tension, Kinetic theory of gases.

(ii) Heat.

Thermometry, expansion, calorimetry, change of state, conduction, radiation, thermodynamics.

(iii) Light.

Reflection and refraction, dispersion and chromatic aberration, spherical aberration, optical instruments, velocity of light, the spectrum, interference, diffraction and polarisation.

(b) Magnetism and Electricity.

The electrostatic field, conduction, condensers, specific inductive capacity, magnetism permanent and induced, electric currents, magnetic force due to currents, electro-magnetic induction, electrolysis, heating effects, thermo electricity, discharge of electricity through gases, radioactivity, structure of the atom.

(c) Practical.

The practical examination involves experimental work ranging over the above syllabus.

The standard is indicated by the following text books:—

General Properties of Matter	} Poynting and Tomson.
Heat	
Light	.. Preston.
Magnetism and Electricity ..	.. J. J. Thomson.

4.—Chemistry.

(a), (b) and (c) Inorganic, Organic and Practical.

Kinetic Theory of Molecules and its applications; Dalton's Atomic theory; Atomic and molecular weights; Structural Chemistry and Stereo-isomerism; Periodic Law; Radio activity and modern views regarding the constitution of matter. Laws of true solution; Colloidial solution; Ionic theory and its applications. Conditions of Chemical equilibrium in a homogeneous and a heterogeneous system; Rate of chemical transformation; Catalysis. Phase rule and its application to one and two component systems. Nature of energy and its transformation in Thermo Chemical and Electro Chemical reactions.

The common elements and their important compounds; the inert gases; complex inorganic amines and cyanides. Manufacture of the common industrial products—organic and inorganic—with special reference to Indian conditions. The following organic compounds and their simple derivatives:—methane and ethane: ethylene and acetylene; benzene, toluene, anthracene, pyridine and napthalene, methyl, ethyl and propyl, alcohol, ethyl acetoacetate and ethyl malonate; lactic, oxalic, malonic, succinic, malic, tartaric and citric acids; fumaric and maleric acids, glycerol and urea. Chemistry of esters, ethers, amines, carbohydrates, cyanogen, derivatives, diazo, and Azocompounds. Application of catalysts and organometallic compounds in organic synthesis; Composition, Purification and Analysis of organic compounds.

Qualitative analysis of a sample containing four inorganic radicals; identification of a common organic compound; simple gravimetric and volumetric estimation.

5.—Classical languages.

(i) Latin.

(a) Translation.

The paper shall consist of (*a*) passages for translation from Cicero or Cæsar, and Virgil or Lucretius, (*b*) a passage or passages from one or more of the following—Livy, Tacitus, Horace, (*c*) a piece of English prose for translation into Latin. 150 marks of which 75 shall be given to (*c*).

(b) Language, Literature and Grammar.

The paper shall consist of questions on Accidence, Syntax, Latin philology and literature, Roman History, the geography and organisation of the Empire.

A choice of questions shall be allowed.

(ii) Greek.

(a) Translation.

The paper shall consist of (*a*) passages for translation from Homer and Demosthenes, (*b*) a passage or passages from one or more of the following—Thucydides (excluding speeches), Euripides (excluding choruses), Xenophon, Plato, (*c*) a piece of English prose for translation into Greek. 150 marks of which 75 shall be given to (*c*).

(b) Language, Literature and Grammar.

The paper shall consist of questions on Accidence, Syntax, the development of the literature in its chief forms, the contributions of the Greeks to the development of civilisation, history and geography.

A choice of questions shall be allowed.

(iii) Sanskrit.

(a) Translation; (b) Language, Literature and Grammar.

The object of the examination will be more to draw out what a candidate knows than to test his knowledge. It is not expected that he should be an expert or a specialist in any branch of Sanskrit Literature, but he should have a grasp of both the language and Literature, Vedic and Classical.

He should have a general knowledge of Sanskrit Grammar, Vedic and Classical. This knowledge will be tested not by asking him to quote rules, but by their application to language.

He will be required to translate easy passages in English from Vedic or Classical Sanskrit Literature, but not from commentaries. He may be asked to compose in Sanskrit, to write an essay in Sanskrit, to summarise a given passage in English or Sanskrit and to translate into either language.

(iv) Arabic.

(a) Translation.

(*i*) From English into Arabic and (*ii*) from Arabic into English.

(b) Language, Literature and Grammar.

Muhammadan civilisation including—

(*i*) History and (*ii*) Literature.

(*i*) The outline of *Muhammadan History* from the beginning of Islam up to the fall of the Abbasides of Baghdad in the middle of 13th century A.D.

(*ii*) A general knowledge of the History of *Arabic Literature.* Grammar according to modern method and elements of Arabic prosody and Rhetoric.

(v) Persian.

(a) Translation.

All translation will as far as practicable be from and into the present day language of Iran.

(b) Language, Literature and Grammar.

Candidates must possess a fair knowledge of the general outlines of the literary history of Persia with special study of a particular period, *e.g.*, the Ghaznavi and Saljugi period, and first-hand knowledge of a few selected authors, such as Firdausi, Unsuri, Minuchihri, Anvari, Naisr-i-Khisrau, Khayyam, etc. Questions on grammar shall demand from the candidates not mere cramming and reproduction from memory but intelligent practical application of the grammatical rules, requiring some discrimination.

(vi) Pali.

(a) Translation.

(*i*) Passages prose and verse of moderate difficulty for translation from Pali into English.

(*ii*) A passage of moderate difficulty for translation from English into Pali.

(b) Language, Literature and Grammar.

1. Knowledge of literature will include—

(*i*) A knowledge of canonical literature and commentaries as well as literature outside the canon;

(*ii*) History of Buddhism from its rise to the 7th century A.D.

(*iii*) Indian civilisation as depicted in the canonical Pali literature and

(*iv*) Indian thought and ideals at the time of the rise of Buddhism

2. The questions on language and grammar will include—

(*a*) Elementary knowledge of Sanskrit grammar;

(*b*) Elementary knowledge of the principles of comparative philology; and

(*c*) Knowledge of Indian inscriptions from the earliest times to the 2nd century A.D.

A fairly wide choice of questions will be given.

(vii) Urdu.

(a) Translation.

(*i*) From English into Urdu and (*ii*) from Urdu into English.

(b) Language, Literature and Grammar.

(*i*) A general knowledge of the history of Urdu language and literature.

(*ii*) Grammar according to modern method and elements of Urdu Prosody and Rhetoric.

6.—History.

(a) Indian History.

A knowledge of Ancient, Mediæval and modern India will be required. The main stress will be laid on the period 1500-1920 A.D. Sketch historical maps will be required of candidates. A knowledge of political, military and economic history will be demanded as also of modern constitutional development. The broad outlines of religious and cultural history should be known; also the history of foreign countries, so far as it directly affected the history of India.

(b) English and European History.

The main stress in this paper will be laid on English History, knowledge of European History being only required in so far as it more or less directly links up with English History. Chief importance will be attached to the period 1500-1920 A.D. Political, military, cultural, economic and constitutional history will also be required. Sketch maps will be essential. The growth and history of the British Empire should be known.

7.—Philosophy.

(a) Metaphysics and Ethics.

Definition and Province. Relation of Ethics and Metaphysics to cognate subjects. Methods of Metaphysics and Ethics. *A priori* and *a posteriori* Theories. Discussion of the principal Categories of knowledge. Relation of the Finite to the Infinite, the Conditioned to the Unconditioned, etc. The influence of Evolution on Metaphysical and Ethical Thought. Leading Theories of the Constitution of the World. Naturalism and Idealism. Theories of the nature of the Soul and its relation to the Body. The idea of the Self. The idea of God. Relation of God to the World and the Soul. Immanence and Transcendence, Agnosticism, Septicism, Pantheism, Theism, Immortality, Optimism and Pessimism.

The moral Consciousness, Postulates of Morality, Human Freedom, Moral Obligation, Ethical Standards. Individual and Society. The Social Organism. Duties and Virtues. Theories of Punishment. The nature of Moral Progress.

(Candidates will be expected to possess a general knowledge of the history of Metaphysics and Ethics, both Eastern and Western, ancient and modern.)

(b) Psychology.

Scope and Province. Relation of Psychology to cognate subjects. Methods of Psychology. Varieties of Psychological Study. Relation of Mind to Body. Consciousness and Subconscious. Suggestion. Mental processes. Sensation and its Organic Basis. Perception. Ideation. Memory and Imagination. Judgment. The Development of the Categories. Reasoning. Belief. The Growth of the Conception of the Self. The Various Selves. Feelings and Emotions. The Psychology of Will. Group Psychology. Social Psychology.

(Students are expected to possess a general knowledge of the history of Psychological Theory.)

8.—Economics.

(a) Political Economy; (b) Economic History and application to India.

Political Economy.—This subject will include the Organization of Production; theories of consumption, Value, Monopoly and Distribution; the problems of Population, Labour and Industrial Peace; the theories of Money, Prices, Credit and Banking; the mechanism and theory of international Trade and Foreign Exchange; the principles of Public Finance.

Candidates will be expected to show familiarity with the economic conditions and development of India, and to be able to apply the principles of Political Economy to Indian conditions.

They are also expected to have some knowledge of the industrial history of England.

9.—Botany.

(a) and (b) Theoretical Course.

Scope of Botany. Difference between plant and animal. Outlines of the modern systems of classification.

Vegetable cell. Cell contents, Cell division, Tissues and tissue systems.

Morphology (including histology) and Life history of Algæ (*chroococcus*, a desmid, *Spirogyra*, *Ulothrix*, *Vaucheria*, *and Chara*). Fungi (Yeast, *Mucor*, *Peronospora*), Muscineæ (a moss plant, *Marchantia*), Pteridophyta (a fern, *Lycopodium Sellaginella* and *Equisetum*) and *Gymnospermia* (*Cycas-Pinus*).

General morphology, histology and life history of Angiosperms Physiology of plants including the principal experiments. Outlines of the ecology of plants with special reference to the conditions of Bengal.

Distribution of plants in time and space.

A knowledge of the systematic position, morphological characters, use and cultivation of the more common economical plants of Bengal (viz., rice, and other cereals, pulses, common vegetables, fruit trees, sugar producing plants, jute, indigo, cotton and the common timber trees).

(c) Practical Course.

Knowledge of microtechnic including free hand section cutting for microscopical examination. Drawing of dissection of flowers and microscopical sections. Referring common plants of Bengal to their Natural orders. Identification of plants by analytical tables. Simple physiological experiments.

10.—Geology.

The examination in Geology shall consist of (*a*) and (*b*) two theoretical papers, and (*c*) one practical paper.

(*a*) and (*b*). The theoretical course shall consist of—

Dynamical and Structural Geology.

Geological function of Air, Water and Life. Earthquakes and volcanoes. Secular upheaval and subsidence. Different types of structures met with in the crust of the earth. Earth sculpture. Origin of the Himalaya mountains. Water-supply.

Mineralogy and Petrology.

Physical and chemical characters of the more important minerals including their origin and commercial use. Classification of rocks. The leading rock types. Building materials.

Palæontology and Historical Geology.

Use of fossils. Leading types of fossils. Principles of correlation. The standard stratigraphical scale. Characters and distribution of the series of rocks found in India.

(*c*) The practical examination shall include (*i*) the identification and description of rocks and minerals, (*ii*) the description of microscopic sections of rocks, (*iii*) the recognition of important genera of fossils and (*iv*) the drawing and interpretation of geological maps and sections.

11.—Physiology.

(a) and (b) Theoretical Course.

General Physiology.

1. The Cell-membrane, Physico-Chemical processes—diffusion, Osmosis and Dialysis, Osmotic-pressure, Electrolytes, Ionisation, Surface tension, Absorption. Properties of colloids, Catalysis and Endymeaction.

Chemical Physiology.

2. Chemical composition of the body, Chemistry of carbohydrates, fats, liquids and proteins, Chemical Physiology of blood and lymph. Coagulation, Hæmolysis, Precipitins, Tests for blood. Immunity.

Histology.

3. Histology and development of the cell, Segmentation of ovum and formation of germinal membranes. Microscopical appearances of blood, lymph and milk. Minute structure of the various organs and tissues of the animal body.

Physiological Processes.

4. Physiology of contractile issues, Functions of nerve-cells and nerve fibres, the circulation of the blood, respiration, processes involved in digestion and absorption of food, metabolism, dietetics, vitamines, physiology of endocrine organs, harmones, excretion by the kidneys, skin, lungs and liver, production and regulation of body heat, mechanism of sound production, and speech, Physiology of the Central and Autonomic nervous systems, special physiology of the organs of sense and Physiology of growth and reproduction.

(c) Practical Course.

I. The chemistry of carbohydrates, fats and proteins found in blood, milk and common food substances, Chemistry of hæmoglobin and its principal derivatives. Uses of the Hæmoglobinometer and direct vision spectroscope, composition of bile, normal constituents of urine and their estimation, more important abnormal constituents of Pathological urine and their estimation, Cryoscopy.

II. Histological technique involving the use of the microtome and methods of fixing, staining and mounting for the preparation of permanent specimens, minute anatomy of the various organs and tissues of the body, the use of Haemacytometers.

III. Demonstration of the uses of the more important apparatus employed in Physiological investigation. A practical acquaintance with the methods of performing the following experiments:—

1. **Muscle and nerve.**—Myographic method of demonstration of the contraction of muscle under various conditions. Tetanus. Fatigue. Work done by a contracting muscle. Conduction in a nerve. Velocity of nerve-impulse.

2. **Experiments on the frog's heart.**—Normal tracing of the heart beats. Modifications of the tracing by the application of heat and cold, drugs and stimulation of the vago-sympathetic trunk.

3. Sphygmographic tracing of the pulse. Determination of the blood pressure in man by means of Sphygmomanometers.

4. Experiments on reflex action in "Spinal" frog.

12.—Zoology.

(a) and (b) Theoretical Course.

Scope of zoology and principles of classification.

Animal cell. Cell division. Elementary tissues, their morphological differentiation and physiological division of labour. Principles of animal physiology.

General characters of the following groups (including the distinctive characters of the classes, the more important orders represented in Bengal and of the development of the groups marked X); Protozoa; Porifera X, Coelentera, Platyhelminthes X, Nemertinea, Nematoda; Rotifera, Annelida X, Arthropoda X, Mollusca X, Echinoderma X; Chordata, Hemichorda, Cephalochorda X, Urochorda X, Craniata-Cyclostomata, Pisces, Amphibia X, Reptilia, Aves X and Mammalia X.

Distribution of animals in time and space.

Theories of evolution. Heredity, variation and adaptation. Cell in inheritance. Eugenics.

(c) Practical Course.

Knowledge of micro-technic, including section cutting by paraffin method, Microscopic examination and dissection of Amoeba, Paramoecium, Monocystis, Spongilla, Hydra, Irene, Pheretima, Palaemon, Periplanata, Amellidens, Ampullaria, a starfish, a sea-urchin, a holothurian, Amphioxus, Doliolum, an ascidian, an elasmobranch (or Rohu fish), Bufo, the house gecko, the fowl and Cavia.

13.—History of Islam.

There will be two papers on this subject. The first paper will consist of two parts dealing with the History of Islam in India and the History of Islam outside India respectively. Each part will carry a maximum of 75 marks. The second paper will deal with Islamic Philosophy and Culture and will carry 150 marks.

What the examinee will be expected to know is not the account of battles or history of intrigues, but a good knowledge of the social, political and economical conditions of the Islamic Empire and of the literary, philosophic and scientific activities of the Muslims under the Caliphate. In this connection special attention should be paid to foreign and particularly Hellenistic influences on Islamic thought and culture. He will be further required to know the sources of information on his subject—contemporary and modern—and to estimate their relative importance as works of history. Stress will be laid on the manner and method in which the subject is approached and discussed. Nor will the style be reckoned as less important than the subject matter. The object of the examination will be not to test the memory of the examinee but his grasp of the subject, his power of thinking, his capacity for seizing on the essentials as opposed to non-essentials in a long, complicated narrative.

14.—Constitutional History of England and the Empire.

In this paper the main stress will be laid on the period from 1600 A.D. onwards, but candidates will be expected to possess a knowledge of the main episodes of constitutional importance prior to that date. Candidates should also be acquainted with the history of the making of the constitutions of Australia, Canada, South Africa and India. Special knowledge of that of India will be required. The constitutional history of the United States of America, so far as it throws light on English Constitutional History, should be known.

15.—Ancient Indian History and Culture.

1. The age of the Vedas,—the Samhitas, the Brahmanas and the Sutras.
2. Rise and development of Buddhism and Jainism.
3. Political history from the 7th century B.C. to the 12th century A.D.
4. Administrative system and political theories.
5. Economic condition, including trade and maritime activity.
6. The social organisation of the Post-Vedic period, with special reference to the growth of the caste system.

Books recommended indicating the standard required.

1. Cambridge History of India, Vol. 1, pages 1—318.
2. V. A. Smith—Early History of India.
3. R. C. Dutt—Civilization in Ancient India (omitting chapters on Political History).
4. Dr. P. N. Banerjee—Public Administration in Ancient India.

16.—Political Theory and Political Organization.

Politics.—This subject will include political theory and political organization. Candidates will be required to show a knowledge of the theory of the state, theories about the origin of the state, theories of law and sovereignty, citizenship, theories about state interference, the structure of Government, forms of Government and the ends of the state. A knowledge of the historical development of some of the more important theories will also be required.

Political organization will include a study of the details of the British constitution and the Indian constitution and the outlines of the constitutions of France, the United States, Germany, Canada, Australia and South Africa. The history of institutions is not included, but candidates will be required to know the earlier stages from which existing Indian political institutions have directly developed.

17.—Anthropology.

Social.

Candidates will not be expected to have an extensive experience of laboratory and museum work. The subject will be treated with special, but not exclusive, reference to peoples of rude culture including pre-historic civilization.

Physical.

The subject includes pre-historic Archæology and Technology. Candidates will be expected to have such knowledge as may be acquired by laboratory and museum work consisting mainly in the handling and study of specimens and exhibits. The subject will be treated with special, but not exclusive, reference to peoples of rude culture including pre-historic civilization.

18.—Comparative Philology.

The subject shall include—

(*a*) the general principles of the Science of Language, including Elementary General Phonetics, Families of speech, Evolution of Language in Phonetics, Inflections, Syntax and Meaning, the Evidence of Language in the History of Civilization and History of Philological Speculation.

(*b*) The Philology of one of the following languages to be selected at the option of the candidate:—

Sanskrit, Pali, Persian, Arabic, English, Bengali, Hindustani (Urdu or Hindi).

The paper will be in two parts with 75 marks for each.

19.—Bengali Language and Literature.

The candidate will be expected to possess a general knowledge of the history of development of the Bengali Language and Literature from the time of Chandidas down to the death of Bankim Chandra Chatterjee. The question will demand a first-hand acquaintance with the important works of each period within the above limits, and will include points of Grammar, Philology, Social and Political History, as well as literary criticism. The answers should be given in Bengali, the correctness of which will be taken into consideration in awarding credit.

20.—Geography.

Candidates may be asked to show their ability to draw neat and accurate maps.

A.—Geography of the world.

(1) Elementary Astronomy.

(2) Natural Phenomena—Wind, rain, etc., and their causes.

(3) Land and sea distribution. Main river and mountain systems of the world; their importance, political and economic.

(4) General Climatic Geography of the World.

(5) Main trade routes. Distribution of oil, coal, wheat, wool, cotton, rice, jute tracts.

B.—Geography of India.

(1) General description and Physical Geography.

(2) Relation of Geography to—

(*a*) Climate (with special reference to the monsoon currents).

(*b*) History of India.

(*c*) Economics. The main products of the country and their nature of transport and distribution. Railway and river systems.

(3) Influence of Geography on relations of India with—

(*i*) Neighbouring countries.

(*ii*) United Kingdom.

(4) Ethnographic Geography.

C.—Geography of Bengal.

River and railway system.
Natural products.
Ports.
Trade—Internal and External.
Climate.

21.—International Law.

Peace and War—With special reference to the Independent or Sovereign States, Dependent States.

British Colonies and the Native States of India.

Sea and the Territorial waters: Nationals, Aliens and Domicile.

Nationality and nationalisation in India and the Colonies.

Criminal jurisdiction and extradition.

Jurisdiction of the High Court of Justice and the Foreign Courts

The Peace Treaty, and

The League of Nations Covenants.

Legal relations as affected by war.

Duties of neutral states.

Contraband of war.

22.—Roman Law.

Historical sketch of the Roman Law down to Justinian.

General knowledge of the subject with special reference to the law of persons.

Law relating to real rights.

Law of obligations.

Law of succession—both testamentary and intestate.

Criminal Law and Procedure.

Book recommended:—

A Manual of Roman Private Law, by W. W. Buckland, Cambridge University Press, 1925.

23.—Jurisprudence and Principles of Legislation.

Jurisprudence—What it means: its growth as a science of positive law

A general knowledge of the subject with special reference to—

Law and Rights.

Private Law.

The application of law.

Principles of Legislation—with special reference to the Legislative Idealism in the 19th century.

The Rights of the Individual.

Principles of utility and the distribution of property.

Offences and Punishments.

Free Trade and Protection.

The Fundamental doctrines of Socialism—Aims and policy of the Socialists—Socialist views regarding Land and the Landlords, the Capital and Capitalists, unemployment.

24.—English Constitutional Law.

A general study of the subject with special reference to the Nature of Constitutional Law and its place in jurisprudence.

Nature of Parliamentary Sovereignty

House of Commons.

House of Lords.

Functions of the Crown in Parliament Cabinet.

Right to Personal Freedom.

Right of Freedom of Discussion.

Right of Public Meeting.

Conventions of the Constitution.

25.—Hindu Law.

Candidates are required to have a general knowledge of the principles of law and of leading cases in subjects covered by the following syllabus:—

1. Sources—Ancient and Modern sources. Legislation relating to Hindu Law. Schools of Law.

2. Marriage—Kinds of; Capacity for marriage and prohibited degrees. Effect of marriage. Rights as between husband and wife.

3. Sonship—Legitimate and adoptive—Effect of illegitimacy—The law of adoption—Joint family, Mitakshara and Dayabhaga law. Partition. Impartible Estates.

4. Law of inheritance according to the Mitakshara and Dayabhaga Schools.

5. Law of Wills—Hindu Wills Act—Probate and Administration Act—Hindu Disposition of Property Act. Trusts and Endowments. Private and Public Debuttor.

26.—Muhammadan Law (according to the Hanafi and Shiah Schools).

Candidates are required to have a general knowledge of the principles of law and of leading cases in subjects covered by the following syllabus:—

1. Sources. Schools of law. Custom in Muhammadan Law.

2. Marriage—Capacity for marriage—Prohibited relations—Forms of marriage—Essentials of marriage—Effect of marriage—Law of Dower—Divorce.

3. Sonship—Legitimacy—Kinship—Affinity and Fosterage.

4. Law of inheritance.

5. Law of Gifts—Donatio mortis causa—Wakfs, public and private—Wakf Validating Act.

27.—Commercial Law.

Arbitration; Contracts; Principal and Agent; Partnership; Limited Companies; Guarantees; Carriage by Land; Carriage by Sea; Insurance; Sale of Goods; Negotiable Instruments; Bankruptcy.

28.—Statistics.

(1) Elementary theory of statistics, not depending mainly on the theory of probability nor requiring a knowledge of the calculus, frequency distributions, average percentiles, and simple methods of measuring dispersion, graphic methods; elementary treatment of qualitative data, *e.g.*, investigation of association by comparison of ratios, consistency of data: the practice of the simplest graphic and algebraic methods of interpolation.

(2) The application of the more practical methods of statistics to the interpretation and analysis of Indian Statistics relating to population, trade, prices and wages.

(3) Elementary Mathematical Statistics including:—Forms of average and measures of dispersion. The normal curve, and methods of deriving other frequency curves. Theory of association, and co-relation for two variables. Theory of errors of sampling as applied to the above.

A wide choice of questions will be given so that a candidate without advanced mathematical knowledge can obtain full marks by answering questions under paragraphs (1) and (2).

POLITICAL DEPARTMENT.

Political.

NOTIFICATIONS.

No. 1231P.D.—18th September 1931.—In exercise of the power conferred by section 22 of the Bengal General Clauses Act, 1899 (Bengal Act I of 1899), the Governor in Council is pleased to amend the order made under sub-sections (*1*) and (*2*) of section 4 of the Bengal Criminal Law Amendment Act, 1925, published in notification No. 12011P., dated the 8th August 1930, in the *Calcutta Gazette* of 9th August 1930, in the following manner, namely:—

From the list of accused persons in case A the following names shall be omitted:—

No. 14. Ananta Dalai of Govindanagar.
No. 24. Hari Nandi of Chechua Hat.
No. 25. Kanu *alias* Kanan Mondal of Chechua Hat.
No. 29. Gostha Manna of Robidaspur.

No. 15917P.—18th September 1931.—In exercise of the power conferred by section 99A of the Code of Criminal Procedure, 1898 (Act V of 1898), the Governor in Council hereby declares to be forfeited to His Majesty all copies, wherever found, of the pamphlet in Bengali entitled "Deshbhakta" published by Nagendra Nath Das and printed by him at the Adwaita Printing Works, 4, Dina Nath Mitter Lane, Calcutta, on the ground that the said pamphlet contains matter which brings or attempts to bring into hatred or contempt and excites or attempts to excite disaffection towards the Government established by law in British India, the publication of which is punishable under section 124A of the Indian Penal Code.

No. 16140P. — 21st September 1931.—In exercise of the power conferred by section 99A of the Code of Criminal Procedure, 1898 (Act V of 1898), the Governor in Council hereby declares to be forfeited to His Majesty all copies, wherever found, of a leaflet in English headed "An appeal" and ending with the words "Inkilub Zindabad, President—Asfakulla," on the ground that the said leaflet contains matter which promotes or attempts to promote feelings of enmity or hatred between different classes of His Majesty's subjects, the publication of which is punishable under section 153A of the Indian Penal Code.

No. 16201P. — 21st September 1931.—In exercise of the power conferred by section 99A of the Code of Criminal Procedure, 1898 (Act V of 1898), the Governor in Council hereby declares to be forfeited to His Majesty all copies, wherever found, of a pamphlet in Hindi entitled "Rashtraka Singhanad" containing poems compiled by Bhaggulal Rathor, published by Debidoyal Pandey of Cawnpore and printed by Radharaman Pandah at the Kesari Press, 2/3, Chittaranjan Avenue, Calcutta, on the ground that the said pamphlet contains matter which brings or attempts to bring into hatred or contempt and excites or attempts to excite disaffection towards the Government established by law in British India, the publication of which is punishable under section 124A of the Indian Penal Code.

R. N. REID,
Chief Secy. to the Govt. of Bengal (offg.).

POLICE DEPARTMENT.

NOTIFICATIONS.

Midnapore-Bankura.—No. 4100Pl. — 16th September 1931.—Whereas the Governor in Council has reason to believe that the members of a gang of dacoits and burglars ordinarily residing in the jurisdiction of police-station Binpur in the district of Midnapore and Raipur in the district of Bankura, and commonly known as the "Bagal-Gharai gang," are addicted to the systematic commission of non-bailable offences:

Now, therefore, the Governor in Council, in exercise of the power conferred by section 3 of the Criminal Tribes Act, 1924 (Act VI of 1924), hereby declares the said gang to be a criminal tribe for the purpose of that Act.

Midnapore-Bankura.—No. 4101Pl. — 16th September 1931.—In exercise of the power conferred by section 10 of the Criminal Tribes Act, 1924 (Act VI of 1924), the Governor in Council hereby directs that every registered member of the "Bagal-Gharai gang," which has been declared by notification No. 4100Pl., dated the 16th September 1931, to be a criminal tribe, shall, in the prescribed manner, report himself at fixed intervals and notify his place of residence, any change or intended change of residence, and any absence or intended absence from his residence.

Rangpur.—No. 4104Pl.—16th September 1931.—Whereas the Governor in Council has reason to believe that the members of a gang of dacoits and burglars ordinarily residing in the jurisdiction of police-station Sundarganj, district Rangpur, and commonly known as "Nadu Shaikh's gang," are addicted to the systematic commission of non-bailable offences:

Now, therefore, the Governor in Council, in exercise of the power conferred by section 3 of the Criminal Tribes Act, 1924 (Act VI of 1924), hereby declares the said gang to be a criminal tribe for the purpose of that Act.

Rangpur.—No. 4105Pl.—16th September 1931.—In exercise of the power conferred by section 10 of the Criminal Tribes Act, 1924 (Act VI of 1924), the Governor in Council hereby directs that every registered member of "Nadu Shaikh's gang," which has been declared by notification No. 4104Pl., dated the 16th September 1931, to be a criminal tribe, shall, in the prescribed manner, report himself at fixed intervals and notify his place of residence, any change or intended change of residence, and any absence or intended absence from his residence.

R. N. REID,
Chief Secy. to the Govt. of Bengal (offg.).

JUDICIAL DEPARTMENT.

No. 8524A.

Powers.

Tippera.—No. 1507A.D.—15th September 1931.—Mr. Basanta Bihari Sarkar, I.C.S., Joint Magistrate, Tippera, is vested with the powers of a Subordinate Judge within that district.

Midnapore.—No. 1565A.D.—18th September 1931.—Mr. Sudhansu Kumar Haldar, I.C.S., Joint Magistrate, Midnapore, is vested, under section 407 (2) of the Code of Criminal Procedure, with power to hear appeals from the decisions of Magistrates of the second and third classes.

R. N. REID,

Chief Secy. to the Govt. of Bengal (offg.).

Appointments and Transfers.

Dacca.—No. 6700J.—14th September 1931.—Babu Himangshu Bikas Basu, M.A., B.L., is appointed to act as a munsif in the district of Dacca, to be ordinarily stationed at Narayanganj, during the absence, on leave, of Babu Kiran Kumar Bhattacharji.

Pabna-Bogra.—No. 6737J.—17th September 1931.—Babu Krishnendra Sundar Bhattacharji, M.A., B.L., is appointed to act as a munsif in the district of Pabna and Bogra, to be ordinarily stationed at Pabna, during the absence, on leave, of Babu Satchidananda Gupta.

Powers.

Murshidabad.—No. 6720J.—16th September 1931.—Babu Manmatha Nath Ghatak, munsif of Kandi, in the district of Murshidabad, is vested with powers to exercise final jurisdiction in the trial of suits for the recovery of rent under section 153 (*b*) of the Bengal Tenancy Act, VIII of 1885.

NOTIFICATIONS.

Faridpur.—No. 6765J. — 21st September 1931.—In exercise of the power conferred by section 65 of the Bengal Village Self-Government Act, 1919 (Bengal Act V of 1919), the Governor in Council is pleased to appoint the following members of the Bhanga union board within the Bhanga police-station in the Sadar subdivision of the Faridpur district to be, during their term of office as such members, a union bench within the jurisdiction of the said union board for the purposes of that section:—

Babu Aswini Kumar Sen.
Babu Tarachand Malo.
Khan Sahib Maulvi Abdul Gafur *alias* Chand Mian.
Munshi Saiduddin.
Munshi Abdul Wahed Molla *alias* Lal Mian.

2. This notification will take effect from the date of the first meeting of the reconstituted union board at which a quorum is present.

Faridpur.—No. 6766J. — 21st September 1931.—In exercise of the power conferred by section 73 of the Bengal Village Self-Government Act, 1919 (Bengal Act V of 1919), the Governor in Council is pleased to appoint the following members of the Bhanga union board within the Bhanga police-station in the Sadar subdivision of the Faridpur district to be, during their term of office as such members, a union court within the jurisdiction of the said union board for the purposes of that section:—

Babu Aswini Kumar Sen.
Babu Tarachand Malo.
Khan Sahib Maulvi Abdul Gafur *alias* Chand Mian.
Munshi Saiduddin.
Munshi Abdul Wahed Molla *alias* Lal Mian.

2. This notification will take effect from the date of the first meeting of the reconstituted union board at which a quorum is present.

J. W. NELSON,

Secy. to the Govt. of Bengal.

LOCAL SELF-GOVERNMENT DEPARTMENT.

NOTIFICATIONS.

Minister-in-charge: The Hon'ble Mr. Bijoy Prasad Singh Roy.

Rangpur.—No. 268T.M.—15th September 1931.—In exercise of the power conferred by section 74 of the Bengal Local Self-Government Act, 1885 (Bengal Act III of 1885), read with section 22 of the General Clauses Act, 1899 (Bengal Act I of 1899), the Government of Bengal (Ministry of Local Self-Government) are pleased to cancel so much of the notification No. 3200L.S.-G., dated the 3rd July 1924, published at page 1279 of Part I of the *Calcutta Gazette* of the 9th idem, as relates to that portion of road No. 69 within the Gaibandha Municipality which runs from the Gaibandha Railway station to its junction with road No. 24 near the Gaibandha local board office within the same municipality.

Nadia.—No. 3701M.—15th September 1931.—In exercise of the power conferred by clause (*a*) of section 59 of the Bengal Municipal Act, 1884 (Bengal Act III of 1884), the Government of Bengal (Ministry of Local Self-Government) are pleased to approve the resolution passed by the Commissioners of the Meherpur Municipality in the district of Nadia under section 23 of that Act, electing Rai Indu Bhusan Mullick Bahadur to be their Chairman.

No. 3734L.S.-G.—16th September 1931.—The following draft of amendments, which, in exercise of the power conferred by clause (*k*) of sub-section (*2*) of section 101 of the Bengal Village Self-Government Act, 1919 (Bengal Act V of 1919), the Government of Bengal (Ministry of Local Self-Government) propose to make in the rules published under notification No. 1998L.S.-G., dated the 3rd July 1920, as subsequently amended, is published for the information of the persons likely to be affected thereby.

2. The draft will be taken into consideration on the 1st December 1931, and any objections or suggestions received by the undersigned through district officers before that date will be duly considered:—

Draft amendments.

I. *Insert* the following words after the words "occupying buildings" in rule 4 of the said rules:—

"other than khas mahal offices or offices for the collection of rents from Government estates."

II. *Add* the following words after the words "the maximum of Rs. 84" in the proviso to rule 4:—

"including, in the case of Government, the rate payable in respect of khas mahal offices or offices for the collection of rents from Government estates."

Nadia.—No. 3767M.—17th September 1931.—In exercise of the power conferred by clause (*a*) of section 59 of the Bengal Municipal Act, 1884 (Bengal Act III of 1884), the Government of Bengal (Ministry of Local Self-Government) are pleased to approve the resolution passed by the Commissioners of the Nabadwip Municipality in the district of Nadia under section 27 of that Act, electing Babu Pramatha Nath Bhattacharyya to be their Chairman, *vice* Babu Sadananda Bhattacharji.

Medical.

Minister-in-charge: The Hon'ble Mr. Bijoy Prasad Singh Roy.

Calcutta.—No. 2862Medl.—16th September 1931.—Dr. Benoy Lal Mazumdar, Additional Physician, Medical College Hospitals, Calcutta, is granted leave on average pay for four months, under rule 81 (*b*) (*ii*) of the Fundamental Rules, with effect from the 24th August 1931.

Calcutta.—No. 2863Medl.—16th September 1931.—Dr. Manindra Nath De, M.B. (Cal.), M.R.C.P. (Lond.), Resident Physician, Medical College Hospitals, Calcutta, is appointed temporarily to act as Additional Physician of the hospitals, in addition to his own duties, with effect from the 24th August 1931.

Calcutta.—No. 2864Medl.—16th September 1931.—Dr. Pratulpati Ganguly, on return from leave *ex*-India, is appointed temporarily as Additional Physician, Medical College Hospitals, Calcutta, *vice* Dr. Benoy Lal Mazumdar, granted leave.

Public Health.

NOTIFICATION.

Minister-in-charge: The Hon'ble Mr. Bijoy Prasad Singh Roy.

Howrah.—No. 2182P.H.—15th September 1931.—In exercise of the power conferred by sub-section (*1*) of section 349D of the Bengal Municipal Act, 1884 (as amended by Bengal Act II of 1914), the Government of Bengal (Ministry of Public Health) are pleased to direct that the Commissioners of the Howrah Municipality in the district of Howrah shall appoint—

One Health Officer of the 1st class;
One Sanitary Inspector of the 2nd class and
Three Sanitary Inspectors of the 1st class.

II. This cancels so much of paragraph II of notification No. 803San., dated the 18th September 1915, as relates to the Howrah Municipality.

C. W. GURNER,
Secy. to the Govt. of Bengal.

Orders by the Surgeon-General with the Government of Bengal.

No. 16000.—16th September 1931.—The undermentioned candidates who were admitted and trained under the new rules are declared to have passed the Compoundership Examinations held at the Dacca Medical School in October 1930 and April 1931, respectively, under the old rules:—

October 1930.

Jogesh Chandra Chakravartty.
Sremanta Kumar Mridha.
Mahendra Chandra Sil.
Md. Abdul Mannan.
Sashi Bhusan Chakravartty.
Nakul Chandra Chakravartty.
Suresh Chandra Chakravartty.
Aswini Kumar Nath.
Harendra Narayan Ghose.

April 1931.

Nibaran Chandra Chakravartty.
Anath Bandhu Chakravartty.
Gourbashi Pal.
Bhagaban Chandra Nath.

W. V. COPPINGER, MAJOR-GENERAL, I.M.S.,
Surgn.-Genl. with the Govt. of Bengal.

EDUCATION DEPARTMENT.

NOTIFICATIONS.

No. 914T.Edn.—17th September 1931.—In exercise of the powers conferred by section 6, sub-section (*1*), clause (*c*), and section 10 of the Indian Universities Act, 1904 (VIII of 1904), as amended by the Calcutta University Act, 1921 (VII of 1921), His Excellency the Chancellor of the Calcutta University is pleased to re-nominate Mr. Charu Chandra Biswas, C.I.E., M.A., B.L., M.L.A., to be an Ordinary Fellow of the University, with effect from the 30th October 1931, the date of expiry of his present term.

Minister-in-charge: The Hon'ble Mr. K. Nazim-ud-Din, C.I.E.

No. 856T.Edn.—14th September 1931.—The Government of Bengal (Ministry of Education) are pleased to appoint Maulana Sufi Haji Muhammad Abu Bakar of Phurphura to be a member of the Muslim Education Committee constituted in this Government resolution No. 398Edn., dated the 3rd February 1931.

Calcutta.—No. 866T.Edn.—14th September 1931.—Babu Narendra Nath Ganguly, officiating District Inspector of Schools, Calcutta, is allowed leave on half average pay for three months, under rule 81 (*d*) of the Fundamental Rules, in extension of the leave already granted.

Dacca.—No. 917T.Edn.—17th September 1931.—Babu Haridas Saha, Professor, Dacca, Intermediate College, is appointed to act as Principal of the college, on his own pay in the Bengal Educational Service, with effect from the 14th November 1931, or any subsequent date on which he takes over charge, during the absence, on leave, of Mr. Surendra Nath Maitra, or until further orders.

Calcutta.—No. 926T.Edn.—18th September 1931.—Mr. Mukul Chandra Dey, Principal, Government School of Art, Calcutta, is allowed leave on average pay for thirteen days, with effect from the 3rd August 1931.

ERRATUM.

Minister-in-charge: The Hon'ble Mr. K. Nazim-ud-Din, C.I.E.

No. 834T.Edn.—12th September 1931.—In line 1 of notification No. 2285Edn., dated the 20th August 1931, published at page 1011, Part I of the *Calcutta Gazette* of the 27th August 1931, *for* "Babu Satya Charan Kahali" *read* "Babu Satya Saran Kahali."

Registration.

NOTIFICATIONS.

Minister-in-charge: The Hon'ble Mr. K. Nazim-ud-Din, C.I.E.

Nadia.—No. 860T.Regn.—14th September 1931.—In exercise of the power conferred by section 3 of the Bengal Muhammadan Marriages and Divorces Registration Act, 1876 (Bengal Act I of 1876), the Government of Bengal (Ministry of Education) are pleased to appoint Maulvi Mahammad Yaqub to be a Muhammadan Registrar within the police-station of Kaliganj, in the district of Nadia.

Nadia.—No. 861T.Regn.—14th September 1931.—In exercise of the power conferred by section 2 of the Kazis' Act, 1880 (Act XII of 1880), the Government of Bengal (Ministry of Education) are pleased to appoint Maulvi Mahammad Yaqub to be the Kazi for the celebration of marriages and the performance of other rites and ceremonies within the police-station of Kaliganj, in the district of Nadia.

Jalpaiguri-Rangpur. — No. 869T.Regn.—14th September 1931.—Mr. A. R. Penheiro, Sadar Sub-Registrar of Jalpaiguri, on return from leave, is appointed to be Sadar Sub-Registrar of Rangpur.

Bogra.—No. 874T.Regn.—15th September 1931.—In exercise of the power conferred by section 3 of the Bengal Muhammadan Marriages and Divorces Registration Act, 1876 (Bengal Act I of 1876), the Government of Bengal (Ministry of Education) are pleased to appoint Maulvi Zillar Rahman to be a Muhammadan Registrar within the police-stations of Panchbibi and Joypurhat, in the district of Bogra.

Bogra.—No. 875T.Regn.—15th September 1931.—In exercise of the power conferred by section 2 of the Kazis' Act, 1880 (Act XII of 1880), the Government of Bengal (Ministry of Education) are pleased to appoint Maulvi Zillar Rahman to be the Kazi for the celebration of marriages and the performance of other rites and ceremonies within the police-stations of Panchbibi and Joypurhat, in the district of Bogra.

Bakarganj. — No. 880T.Regn. — 15th September 1931.—In exercise of the power conferred by section 3 of the Bengal Muhammadan Marriages and Divorces Registration Act, 1876 (Bengal Act I of 1876), the Government of Bengal (Ministry of Education) are pleased to appoint Maulvi Muhammad Ramzan Ali to be a Muhammadan Registrar within the police-station of Tazumaddin, in the district of Bakarganj.

Bakarganj. — No. 881T.Regn. — 15th September 1931.—In exercise of the power conferred by section 2 of the Kazis' Act, 1880 (Act XII of 1880), the Government of Bengal (Ministry of Education) are pleased to appoint Maulvi Muhammad Ramzan Ali to be the Kazi for the celebration of marriages and the performance of other rites and ceremonies within the police-station of Tazumaddin, in the district of Bakarganj.

Mymensingh. — No. 901T.Regn. — 16th September 1931.—It is notified for general information that the Government of Bengal (Ministry of Education) are pleased to sanction the retention, for a further period of one year, with effect from the 17th August 1931, of the office of the Joint Sub-Registrar of Gaffargaon at Bhaluka in the district of Mymensingh.

A. J. DASH,
Secy. to the Govt. of Bengal.

Orders by the Director of Public Instruction, Bengal.

BENGAL EDUCATIONAL SERVICE.

Hooghly.—No. 34B.—11th September 1931.—Late Mr. Praphulla Kumar Chatterji, officiating Professor, Hooghly College, in the Bengal Educational Service, is declared, in terms of the proviso to rule 81 (*b*) (*ii*) of the Fundamental Rules, to have been on leave on average pay, on medical certificate, for the period from 13th July 1931 to 25th August 1931.

2. He was permitted to prefix to his leave the summer vacation of the Hooghly College for 1931 extending from 1st May to 12th July 1931.

Hooghly.—No. 35B.—15th September 1931.—Dr. Nripendra Kumar Dutt, Professor, Hooghly College, in the Bengal Educational Service, is declared, in terms of rules 81 (*b*) (*ii*) and 82 (*b*) of the Fundamental Rules, to have been on leave on average pay for five days, with effect from the 1st September 1931.

He is permitted to suffix to his leave Sunday, the 6th September 1931.

Dacca.—No. 37B.—19th September 1931.—Miss Prabhabati Roy, Second Mistress, Eden High School for Girls, Dacca, in the Women's Branch of the Bengal Educational Service, is declared, in terms of rules 81 (*b*) (*ii*) and 82 (*b*) of the Fundamental Rules, to have been on leave on average pay for four days, with effect from the 11th August 1931.

J. M. BOTTOMLEY,
Director of Public Instrn., Bengal (offg.).

Orders by the Inspector-General of Registration, Bengal.

Murshidabad.—No. 630. — 18th September 1931.—Babu Kamala Kinkar Ray Chaudhury, Probationary Sub-Registrar of Berhampore, Murshidabad, is allowed leave on average pay for eleven days, under Subsidiary Rule 288 framed under rule 104 (*b*) of the Fundamental Rules, with effect from the 10th September 1931.

Rajshahi.—No. 631.—19th September 1931.—Maulvi Muhammad Afzal, Sub-Registrar of Atrai, in the district of Rajshahi, is allowed leave on average pay for twenty days, under rule 81 (*b*) (*ii*) of the Fundamental Rules, with effect from the 27th October 1931.

Murshidabad-Rajshahi. — No 632. — 19th September 1931.—Maulvi Khundkar Muhammad Ziaul Ahsan, Sub-Registrar attached to Berhampore, Murshidabad, is appointed to act as Sub-Registrar of Atrai, in the district of Rajshahi, with effect from the date on which he joins the appointment, during the absence, on leave, of Maulvi Muhammad Afzal, Sub-Registrar, or until further orders.

Bakarganj.—No. 633. — 19th September 1931.—Babu Narendra Lal Das, Sub-Registrar of Amtoli, in the district of Bakarganj, is allowed leave on average pay for eight days, under rule 81 (*b*) (*ii*) of the Fundamental Rules, with effect from the 27th October 1931.

Bankura.—No. 634.—19th September 1931.—Maulvi Saiyid Dilwar Ali Mirza, Sub-Registrar of Sonamukhi, in the district of Bankura, is allowed leave on average pay for seventeen days, under rule 81 (*b*) (*ii*) of the Fundamental Rules, in extension of the leave granted to him in this department notification No. 583, dated the 28th August 1931.

Rajshahi.—No. 635.—19th September 1931.—Maulvi Muhammad Halimazzaman, Sub-Registrar, is allowed leave on average pay for one month, under rule 81 (*b*) (*ii*) of the Fundamental Rules, in extension of the leave granted to him in this department notification No. 521, dated the 4th August 1931.

Chittagong.—No. 636. — 19th September 1931.—Maulvi Saiyid Nurul Haq, Sub-Registrar attached to Chittagong, is allowed leave on average pay for ten days, under rule 81 (*b*) (*ii*) of the Fundamental Rules, with effect from the 3rd September 1931.

S. AHMED,
Inspector-General of Regn., Bengal.

FINANCE DEPARTMENT.

Audit.

NOTIFICATIONS.

No. 3888F.—15th September 1931.—The following amendment to the Fundamental and Subsidiary Rules, 1st Edition (Reprint), 1929, is published for general information:—

Page 382—Delegation Chapter.—*Substitute* the following for the entry against item No. 6 in the list of heads of departments:—

(*6*) Chief and Superintending Engineers, Public Works and Irrigation Departments.

No. 3891F.—15th September 1931.—The following amendment to the Bengal Financial Rules, First Edition (Reprint), 1930, is published for general information:—

Page 265—F. R. Appendix 12.—*Substitute* the following for the entry against item No. 6 in the list of heads of departments:—

6. Chief and Superintending Engineers, Public Works and Irrigation Departments.

E. N. BLANDY,
Secy. to the Govt. of Bengal.

COMMERCE DEPARTMENT.

NOTIFICATIONS.

No. 1026T.Com.—16th September 1931.—The following notice published by Messrs. B. N. Elias and Company, Limited, in the *Amrita Bazar Patrika* of the 4th, 6th and 8th September 1931, is republished for general information in accordance with rule 13 (*4*) of the Indian Electricity Rules, 1922, framed by the Government of India under section 37 of the Indian Electricity Act, 1910 (IX of 1910). Any objection, suggestion or representation which may be received by the Secretary to the Government of Bengal, Commerce Department, up to the 4th December 1931, from any person, company or local authority in respect of the application of Messrs. B. N. Elias and Company, Limited, will be considered by Government:—

NOTICE.

It is hereby notified for public information that Messrs. B. N. Elias & Co., Ld., having their registered office at 19-D, Bow Bazar Street in the town of Calcutta, have applied to the Government of Bengal for a license under the Indian Electricity Act, 1910, as modified up to 1st May 1922 to supply electrical energy within an area as defined below under the terms of the following draft license.

The Rajshahi Electric License, 1931.

DRAFT LICENSE.

License for the supply of electric energy granted by the Government of Bengal under the Indian Electricity Act, 1910.

License is hereby granted to Messrs. B. N. Elias and Company, Limited, having its registered office at 19-D, Bow Bazar Street, Calcutta, to supply electrical energy in the area with the power and upon the terms and conditions specified below:—

Short title.

1. This license may be cited as "The Rajshahi Electric License, 1931."

Interpretations.

2. The several words, terms and expressions to which by the Indian Electricity Act, 1910, and any statutory modifications thereof or by the rules thereunder, meanings are assigned shall have in this license the same respective meanings, provided that in this license:—

(*a*) "The Act" shall mean the Indian Electricity Act, 1910, and the statutory modifications thereof.

(*b*) The expression "the licensees" shall mean and include the said Messrs. B. N. Elias & Co., Ltd., and their permitted assigns.

(*c*) The expression "deposited map" shall mean the plan of the area of supply hereinafter specified which has been deposited with the Government in pursuance of the rules under the Act, which plan is signed for the purpose of identification by the Secretary to the Government of Bengal in the Commerce Department and by the applicants Messrs. B. N. Elias & Co., Ltd., Calcutta.

(*d*) The term "unit" shall mean the quantity of electrical energy equivalent to a current of one thousand amperes flowing under an electromotive force of one volt during one hour.

Security.

3. (*a*) The period within which under clause 1 (*a*) of the Schedule to the Act the licensees shall show to the satisfaction of the Government that they are in a position fully and efficiently to discharge the duties and obligations imposed upon them by this license throughout the area of supply shall be six months from the date of notification of the grant of this license.

(*b*) The period within which under clause 1 (*b*) of the Schedule to the Act the licensees shall deposit or secure such sum as therein mentioned, and the sum to be so deposited or secured shall, unless otherwise ordered by Government under the clause, be six months after the notification of the grant of license and Rs. 5,000, respectively.

Area of supply.

4. The area above referred to within which the supply of energy is authorised by this license (the area of supply under the Act) is the whole of the area bounded as follows:—

(*a*) East—By the straight line drawn from the junction of Natore and Tikapara Road to the north up to ⅝ of a mile (Point "A"), and to the south up to Sardah Road.

North—By the straight line drawn from point "A" to point "B" which will be obtained by drawing a straight line to the north from the junction of Nowabganj Road and the river embankment up to 1 mile.

West—By the straight line drawn from point "B" to junction of Nowabganj Road and the river embankment.

South—By the River Padma.

The boundaries are delineated on the map by a heavy red line.

(*b*) The Police Training College at Sardah including adjacent area as shown on the map and bounded by a heavy blue line.

Situation of the Generating Stations.

5. The licensees shall erect the generating stations within the area covered by the license.

Limits within which the supply of energy is to be compulsory.

6. For the purpose of clause IV of the Schedule to the Act the following directions shall be complied with, namely:—

(1) The licensees shall within three years from the date of the grant of this license lay down suitable and sufficient feeders and distributing mains and also execute works to the satisfaction of the Government for the purpose of supplying electrical energy throughout the streets named in the list appended below, shall erect the generating stations mentioned in clause 5 with all machinery and apparatus necessary for the purpose of giving a continuous and efficient supply and shall do all other works necessary for the commencement of supply of energy to the consumers.

(2) At the expiration of each successive period of six months from the commencement of this license until the completion of the compulsory works, the licensees shall submit to the Secretary to the Government of Bengal, reports stating all steps taken and the progress made in carrying into effect this license.

Nature of supply.

7. (*a*) **Nature of supply.**—The systems of supply which may be adopted for the supply of electric energy under this license are the following:—

(*i*) A medium pressure alternating current three-phase four wire supply at a pressure at the consumers terminals of 400 volts between phases and a low pressure of 230 volts between phases and neutral at a frequency of 50 complete cycles per second.

(*ii*) The feeders, distributing mains and service lines may be overhead or underground in whole or in part and shall be erected, constructed, and maintained by the licensees in strict conformity with the Act and the rules thereunder. Provided that nothing in this license shall authorise the licensees to use overhead mains at any higher pressure than medium pressure without the previous sanction in writing of the Government of Bengal in each case and subject to any conditions of limitations which the Government of Bengal may direct.

Provided also that the licensees may, from time to time with the previous consent in writing of the Government of Bengal and subject to such limitations and conditions as shall be prescribed in writing by the Government, adopt any other system of supply for the purpose of this license.

(*b*) **Rates.**—The prices to be charged by the licensees for energy supplied by them shall not exceed the following maxima, namely:—

(A) For domestic purposes.

I. **Lighting.**—(*i*) Annas eight per unit metered, subject to a minimum charge of rupees thirty-six per annum per kilowatt of the rated wattage of lamps installed, or

(*ii*) Rupee one and annas twelve per 20 watt lamp per month and proportionately for lamps of higher wattage, provided that the total number of lamps installed does not exceed six and are used for a period not exceeding six hours daily from dusk.

II. **Fans.**—Annas seven per unit metered, subject to a minimum charge of rupees twenty-four per annum per kilowatt of the rated input of the fans installed.

III. **Flat rate for lights and fans combined.**—Annas seven and pies six per unit metered, subject to a minimum charge of rupees thirty per annum per kilowatt of the rated wattage of the lamps and rated input of the fans installed.

IV. **Motors.**—(*i*) For each installaton having motors whose aggregate rated brake horse power does not exceed 1 B.H.P., annas seven per unit metered, subject to a minimum charge of Rs. 3 per month per rated B.H.P. of all the motors installed.

(*ii*) For each installation having motors in which the aggregate rated brake horse power exceeds 1 B.H.P., annas six per unit metered, subject to a minimum charge of Rs. 3 per month per rated B.H.P. of all the motors installed.

(B) For industrial purposes.

(*i*) For each installation having motors in which the aggregate rated brake horse power does not exceed 4 B.H.P., annas four per unit metered, plus Rs. 8 per month per rated B.H.P. of all the motors installed.

(*ii*) For each installation having motors in which the aggregate rated brake horse power exceeds 4 B. H. P. but does not exceed 15 B. H. P., annas three and pies six per unit of energy metered, plus rupees eight per month per rated B. H. P. of all the motors installed.

(*iii*) For each installation having motors in which the aggregate rated brake horse power exceeds 15 B.H.P., annas three per unit of energy metered, plus rupees eight per month per rated B. H. P. of all the motors installed.

(C) For heating, cooking, refrigerating and for all purposes other than those specified in sub-clauses (A) and (B), annas four per unit metered.

Note.—Where the minimum charge specified under the sub-headings (A) I (*i*) or (A) II or (A) III or (A) IV (*i*) or (A) IV (*ii*) is levied then no other charge for energy consumed shall be made.

(D) In the case of a method of charge approved by the local Government in accordance with section 23, sub-sections (*3*) and (*4*) of the Act such maximum as the Government may fix on approving the method.

Purchase of undertaking.

8. (1) The option of purchase given by sub-section (*1*) of section 7 of the Act shall first be exercisable on the expiration of fifty years from the date of the notification of this license and on the expiration of every subsequent period of twenty years. The percentage to be added on account of compulsory purchase to the value (as determined in accordance with and for the purpose of sub-section (*1*) of section 7 of the Act) of the lands, buildings, works, materials and plants of the license shall, in accordance with the second proviso of the said sub-section, be twenty per cent.

(2) In accordance with clause (*d*) (*ii*) of sub-section (*2*) of section 3 of the Act, it is hereby declared that the generating stations to be used in connection with the undertaking shall form part of the undertaking for the purpose of purchase under section 5 or section 7 of the Act, provided that the power stations shall not have been abandoned by reason of the operation of clause 9.

(3) During the period of notice prescribed in section 7 (4) of the Act all extensions and outlays of money chargeable to the capital expenditure account of the licensees shall be subject to the previous approval of the Government.

Revocation.

9. (1) If the licensees fail to comply with the provisions of any of the clauses or parts of the clauses of this license or fail in the opinion of the Government of Bengal during any portion of the period of three years specified in clause 6 to make satisfactory progress with the works to be executed, the license may be revoked.

(2) in the event of Government revoking the license for any of the causes specified in sub-clause (1), the security deposit of rupees five thousand made in accordance with clause 3 (*b*) shall be forfeited to Government in whole or in part as Government may decide.

Schedule.

The list of streets referred to in clause 6 (*1*) above—

(1) Nawhatta Road from the municipal limits up to Ranibazar Road junction; (2) Ranibazar Road from the College Road junction to Radak Road; (3) College Road from Ranibazar Road up to its junction with Natore Road; (4) Natore Road form Radak Road junction south up to the Court compound; (5) Miapara Road (identical with Miapara Road); (6) Victorial Road; (7) Ghoramara Road (includes Alupatty Road, Mohanlal Babu Road and part of Natore Road already included in item 4); (8) Radak Road; (9) Ganakpara Road; (10) Barakuthi Ghat Road and (11) Steamer Ghat Road from Natore Road junction up to the river.

Every local authority, Company or person desirous of making any representation to the local Government with reference to the above draft license may do so by letter addressed to the Secretary to the Government of Bengal, Commerce and Marine Department, Calcutta, within three months of the date of this notice.

A copy of the deposited map referred in the draft license may be inspected and copies of draft license obtained—

(*a*) At the office of the applicants.

(*b*) At the office of the following local authorities:—

(1) Municipal Office, Rajshahi.

(2) District Board Office, Rajshahi.

No. 1035T.Com.—17th September 1931.—Mr. F. E. Suthrell, Inspector of Factories, Bengal, is granted leave on average pay for six months, under Fundamental Rule 81 (*b*) (*i*), with effect from the 16th November 1931, or any subsequent date on which he may avail himself of it.

E. N. BLANDY,

Secy. to the Govt. of Bengal.

MARINE DEPARTMENT.

NOTIFICATION.

No. 34Mne.—15th September 1931.—In exercise of the power conferred by section 126, sub-section (*3*) of the Calcutta Port Act, 1890 (Bengal Act III of 1890), the Governor in Council is pleased to confirm the following by-law regulating the discharge of dangerous petroleum in bulk in the Port of Calcutta, made by the Commissioners under sub-section (*1*) of section 126 and section 127 of the Act:—

By-law.

"Without the previous permission in writing of the Commissioners, no person shall use or cause to be used steam generated in the boilers of a vessel for the purpose of discharging dangerous petroleum in bulk within the Port.

A breach of this by-law shall be punishable with a fine which may extend to Rs. 500."

E. N. BLANDY,

Secy. to the Govt. of Bengal.

DEPARTMENT OF AGRICULTURE AND INDUSTRIES.

Veterinary.

NOTIFICATION.

Minister-in-charge: The Hon'ble Khan Bahadur Maulvi K. G. M. Farequi.

No. 425T.A.I.—18th September 1931.—Maulvi Serajul Haq, Veterinary Inspector, is appointed to act in the Bengal Lower Veterinary Service as Lecturer, Bengal Veterinary College, during the absence, on leave, of Babu Girindra Nath Chatarji, or until further orders.

L. R. FAWCUS,

Secy. to the Govt. of Bengal.

Orders by the Registrar of Co-operative Societies, Bengal.

No. 22-L. — 12th September 1931.—Whereas I am of opinion, as the result of an enquiry held into the constitution, working and financial condition of the Brahmanpara Co-operative Bank (registered No. 51 (Nadia) of 1925), in the subdivision Ranaghat in the district of Nadia, under sub-section (*1*) of section 35 of the Co-operative Societies Act, II of 1912, that the society ought to be dissolved.

Now, therefore, in exercise of the power conferred by sub-section (*1*) of section 39 of the same Act, I hereby cancel the registration of the said society.

And further, in exercise of the power conferred by sub-section (*1*) of section 42 of the same Act, I hereby appoint the Departmental officer in charge of the Ranaghat Circle to be liquidator of the said society.

No. 23-L. — 12th September 1931.—Whereas I am of opinion, as the result of an enquiry held into the constitution, working and financial condition of the Nachhibar Joutha Bank (registered No. 212 of 1915), in the subdivision Contai in the district of Midnapore, under sub-section (*1*) of section 35 of the Co-operative Societies Act, II of 1912, that the society ought to be dissolved.

Now, therefore, in exercise of the power conferred by sub-section (*1*) of section 39 of the same Act, I hereby cancel the registration of the said society.

And further, in exercise of the power conferred by sub-section (*1*) of section 42 of the same Act, I hereby appoint the Departmental officer in charge of the Contai Circle to be liquidator of the said society.

No. 24-L. — 12th September 1931.—Whereas I am of opinion, as the result of an enquiry held into the constitution, working and financial condition of the Chakjhapu Co-operative Bank (registered No. 78 of 1922), in the subdivision Sadar in the district of Bogra, under sub-section (*1*) of section 35 of the Co-operative Societies Act, II of 1912, that the society ought to be dissolved.

Now, therefore, in exercise of the power conferred by sub-section (*1*) of section 39 of the same Act, I hereby cancel the registration of the said society.

And further, in exercise of the power conferred by sub-section (*1*) of section 42 of the same Act, I hereby appoint the Inspector of Co-operative Societies, Bogra, to be liquidator of the said society.

No. 25-L. — 12th September 1931.—Whereas I am of opinion, as the result of an enquiry held into the constitution, working and financial condition of the Kakra Joutha Bank (registered No. 13 (Midnapore) of 1925), in the subdivision Contai in the district of Midnapore, under sub-section (*1*) of section 35 of the Co-operative Societies Act, II of 1912, that the society ought to be dissolved.

Now, therefore, in exercise of the power conferred by sub-section (*1*) of section 39 of the same Act, I hereby cancel the registration of the said society.

And further, in exercise of the power conferred by sub-section (*1*) of section 42 of the same Act, I hereby appoint the Auditor of Co-operative Societies, Mugberia, to be liquidator of the said society.

No. 26-L. — 12th September 1931.—Whereas I am of opinion, as the result of an enquiry held into the constitution, working and financial condition of the Damhati Samabaya Samity (registered No. 47 (24-Parganas) of 1924), in the subdivision Basirhat in the district of 24-Parganas, under sub-section (*1*) of section 35 of the Co-operative Societies Act, II of 1912, that the society ought to be dissolved.

Now, therefore, in exercise of the power conferred by sub-section (*1*) of section 39 of the same Act, I hereby cancel the registration of the said society.

And further, in exercise of the power conferred by sub-section (*1*) of section 42 of the same Act, I hereby appoint the Departmental officer in charge of the Basirhat Circle to be liquidator of the said society.

No. 27-L. — 12th September 1931.—Whereas I am of opinion, as the result of an enquiry held into the constitution, working and financial condition of the Darikhatar Samabaya Samity (registered No. 106 of 1922), in the subdivision Magura in the district of Jessore, under sub-section (*1*) of section 35 of the Co-operative Societies Act, II of 1912, that the society ought to be dissolved.

Now, therefore, in exercise of the power conferred by sub-section (*1*) of section 39 of the same Act, I hereby cancel the registration of the said society.

And further, in exercise of the power conferred by sub-section (*1*) of section 42 of the same Act, I hereby appoint the Departmental officer in charge of the Magura Circle to be liquidator of the said society.

No. 10376.—21st September 1931. — In supersession of this office notifications noted below, so far as they relate to the appointment of the Special Liquidation Supervisor, Natore, as liquidator of the societies noted against each notification, in the district of Rajshahi,

I hereby appoint the Departmental officer in charge of Natore Circle, instead, to be the liquidator of the following societies:—

Notification No. 159-L., dated 12th May 1929. Chandrakoir Co-operative Krishi Samity (registered No. 14 of 1920).

Notification No. 51-L., dated 23rd September 1929. Kushbari Co-operative Bank (registered No. 223 of 1919).

Notification No. 17-L., dated 1st August 1929. Bara Soil Co-operative Bank (registered No. 188 of 1917).

Notification No. 147-L., dated 11th May 1929. Mirzapur Co-operative Krishi Bank (registered No. 301 of 1917).

Notification No. 6-L., dated 13th July 1929. Maninag Co-operative Krishi Bank (registered No. 191 of 1917).

Notification No. 5-L., dated 13th July 1929. Sukash Co-operative Krishi Bank (registered No. 206 of 1920).

Notification No. 8-L., dated 13th July 1929. Bhagbazar Co-operative Krishi Bank (registered No. 194 of 1917).

Notification No. 76-L., dated 14th February 1930. Hosenpur Joutha Bank (registered No. 517 of 1917).

Notification No. 88-L., dated 19th March 1930. Barabaria Co-operative Krishi Bank (registered No. 236 of 1917).

Notification No. 627T.C., dated 11th May 1929. Tebaria Hogolbaria Krishi Bank (registered No. 261 of 1914).

Notification No. 626T.C., dated 11th May 1929. Ramkristapur Co-operative Krishi Bank (registered No. 200 of 1917).

S. K. GANGULY,

Regr., Co-operative Societies, Bengal.

Orders by the Commissioner of Excise and Salt, Bengal.

No. 13Exc.—16th September 1931.—On return from leave Babu Jatindra Bhusan Acharyya, temporary Inspector of Excise and Salt, is posted to the Raniganj Range in the district of Burdwan.

No. 14Exc.—21st September 1931.—Babu Surendra Nath Sarkar, Inspector of Excise and Salt, Calcutta, Detection Branch, is transferred to Russa Distillery, Calcutta, as Officer-in-charge.

Babu Suresh Ch. Ray, Inspector of Excise and Salt, Calcutta, in charge Russa Distillery, is transferred to the Distillery Branch, Calcutta.

Maulvi Jalaluddin Khan, Inspector of Excise and Salt, Calcutta, Distillery Branch, is transferred to the Detection Branch, Calcutta.

These orders will take effect immediately.

S. K. RAHA,

Commr. of Excise and Salt, Bengal.

REVENUE DEPARTMENT.

Land Revenue.

NOTIFICATIONS.

Burdwan.—No. 796T.R. — 12th September 1931.—Under the powers conferred by section 3 of the Bengal Alluvion and Diluvion Act, 1847 (Act IX of 1847), the Governor in Council is pleased to order that a new survey be made and new maps prepared according to such survey of the lands on the right and the left bank and in the bed of the river Damodar extending from mauza Dakshin Bhasapur, R. S. 1725, police-station Galsi, to Mohanpur, R. S. 1273, police-station Jamalpur, on the left bank of the river and from mauza Beldanga, R. S. 672, police-station Khandaghose, to mauza Kora, R. S. 2911, police-station Jamalpur, on the right bank of the river lying within the administration limits of the district of Burdwan.

Bakarganj.—No. 809T.R.—14th September 1931.—Khan Sahib Quazi Muhammad Muhiuddin, Deputy Collector and Colonisation Officer, Bakarganj Sundarbans, is appointed Khas Mahal Officer, Bakarganj, *vice* Babu Monohar Gupta, Deputy Magistrate and Deputy Collector, reverted to general line, with effect from the date on which he may join his new duties.

Bakarganj.—No. 812T.R.—14th September 1931.—Maulvi Abdul Latif Chowdhury, Sub-Deputy Collector and Khas Mahal Circle Officer, Matberia, is appointed Colonisation Officer, Bakarganj Sundarbans, *vice* Khan Sahib Quazi Muhammad Muhiuddin, Deputy Collector, with effect from the date on which he may join his new duties.

Faridpur-Bakarganj.—No. 815T.R. — 14th September 1931.—Babu Basanta Kumar Ganguli, Sub-Deputy Collector, Gopalganj, Faridpur, is appointed Khas Mahal Circle Officer of Matberia in the district of Bakarganj, with effect from the date on which he may take over charge of his duties.

Dacca.—No. 832T.R. — 14th September 1931.—Under section 3 of the Bengal Survey Act, 1875 (Act V of 1875), the Governor in Council is pleased to order that a survey shall be made of all lands which are comprised in the estates mentioned below of the Dacca Collectorate and situated in the district of Dacca, and that the boundaries of the estates, tenures, mauzas and fields be demarcated on the lands so to be surveyed:—

Government estates.

Nawabpur Police Fari	...	8810
Taluk Gour Mohan Basu	...	124
Ram Dulal Sarma	...	8675
Dinanath Chakrabarty	...	9972
Taluk Hari Kishore Basu	...	9974
Char Saldaha	...	13836
Taluk Ram Saran Ghosh	...	618
Taluk Ram Saran Ghosh	...	15569
Taluk Ram Saran Ghosh	...	15570
Mahal Ghorargaon	...	15607

Temporarily-settled Private estates.

Taluk Sadarpurer Lapta Char	...	10856
Diara Mahal Char Singjuri	...	11054
Mahal Pathar Ghata	...	8668

Dacca.—No. 833T R. — 14th September 1931.—In exercise of the powers conferred by section 101 (*2*) (*d*) of the Bengal Tenancy Act, 1885 (Act VIII of 1885), the Governor in Council is pleased to order that a survey shall be made and a record-of-rights prepared in respect of all the lands which are comprised in the following Government estates of the Dacca Collectorate and situated in the district of Dacca:—

Government estates.

Nawabpur Police Fari	...	8810
Taluk Gour Mohan Basu	...	124
Ram Dulal Sarma	...	8675
Dinanath Chakrabarty	...	9972
Taluk Hari Kishore Basu	...	9974
Char Saldaha	...	13836
Taluk Ram Saran Ghosh	...	618
Taluk Ram Saran Ghosh	...	15569
Taluk Ram Saran Ghosh	...	15570
Mahal Ghorargaon	...	15607

The particulars to be recorded in the record-of-rights shall be the following:—

(*a*) the name of each tenant or occupant;

(*b*) the class or classes to which each tenant belongs, that is to say, whether he is a tenure-holder, raiyat holding at fixed rates, settled raiyat, occupancy raiyat, non-occupancy raiyat, or under-raiyat with or without a right of occupancy, and if he is a tenure-holder, whether he is a permanent tenure-holder or not, and whether his rent is liable to enhancement during the continuance of his tenure;

(*c*) the situation and quantity and one or more of the boundaries of the land held by each tenant or occupier;

(*d*) the name of each tenant's landlord;

(*e*) the rent and cess lawfully payable by each tenant at the time the record-of-rights is being prepared;

(*f*) the amount payable in respect of any rights of pasturage, forest rights, rights over fisheries and the like at the time the record-of-rights is being prepared, the conditions and incidents appertaining to such rights, and if the amount is a gradually increasing amount, the time at which, and the increments by which, it increases;

(*g*) the mode in which that rent has been fixed, whether by contract, by order of a court, or otherwise;

(*h*) if the rent is a gradually increasing rent, the time at which, and the steps by which, it increases;

(*i*) the rights and obligations of each tenant and landlord in respect of—

(*i*) the use by tenants of water for agricultural purposes, whether obtained from a river, jhil, tank or well or any other source of supply, and

(*ii*) the repair and maintenance of appliances for securing a supply of water for the cultivation of the land held by each tenant, whether or not such appliances be situated within he boundaries of such land;

(*j*) the special conditions and incidents, if any, of the tenancy;

(*k*) any right-of-way or other easement attaching to the land for which a record-of-rights is being prepared;

(*l*) if the land is claimed to be held rent-free, whether or not rent is actually paid, and if not paid, whether or not the occupant is entitled to hold the land without payment of rent, and, if so entitled, under what authority;

Provided that if lands are not used for purposes connected with agriculture or horticulture, it shall be sufficient to record that fact together with the prescribed particulars relating to the occupant, the landlord and the tenancy.

Dacca.—No. 834T.R. — 14th September 1931.—In exercise of the powers conferred by section 101 (*2*) (*d*) of the Bengal Tenancy Act, 1885 (Act VIII of 1885), the Governor in Council is pleased to order that a survey shall be made and a record-of-rights prepared in respect of all lands which are comprised in the following temporarily-settled private estates of the Dacca Collectorate and situated in the district of Dacca:—

Temporarily-settled Private Estates.

Sadarpurer Lapta Char	...	10856
Diara Mahal Char Singjuri	...	11054
Mahal Pathar Ghata	...	8668

The particulars to be recorded in the record-of-rights shall be the following:—

(*a*) the name of each tenant or occupant;

(*b*) the class or classes to which each tenant belongs, that is to say, whether he is a tenure-holder, raiyat holding at fixed rates, settled raiyat, occupancy raiyat, non-occupancy raiyat, or under-raiyat with or without a right of occupancy, and if he is a tenure-holder, whether he is a permanent tenure-holder or not, and whether his rent is liable to enhancement during the continuance of his tenure;

(*c*) the situation and quantity and one or more of the boundaries of the land held by each tenant or occupier;

(*d*) the name of each tenant's landlord;

(*e*) the name of each proprietor in the local area or estate with the character and extent of his interest, and the situation and quantity and one or more of boundaries of the lands, if any, which are his private lands as defined in Chapter XI of the Act;

(*f*) the rent and cess lawfully payable by each tenant at the time the record-of-rights is being prepared;

(*g*) the amount payable in respect of any rights of pasturage, forest rights, rights over fisheries and the like at the time the record-of-rights is being prepared, the conditions and incidents appertaining to such rights, and if the amount is a gradually increasing amount, the time at which, and the increments by which, it increases;

(*h*) the mode in which that rent has been fixed, whether by contract, by order of a court, or otherwise;

(*i*) if the rent is a gradually increasing rent, the time at which and the steps by which, it increases;

(*j*) the rights and obligations of each tenant and landlord in respect of—

(*i*) the use by tenants of water for agricultural purposes, whether obtained from a river, jhil, tank or well or any other source of supply, and

(*ii*) the repair and maintenance of appliances for securing a supply of water for the cultivation of the land held by each tenant, whether or not such appliances be situated within the boundaries of such land;

(*k*) the special conditions and incidents, if any, of the tenancy;

(*l*) any right-of-way or other easement attaching to the land for which a record-of-rights is being prepared;

(*m*) if the land is claimed to be held rent-free, whether or not rent is actually paid, and if not paid, whether or not the occupant is entitled to hold the land without payment of rent, and, if so entitled, under what authority:

Provided that if lands are not used for purposes connected with agriculture or horticulture, it shall be sufficient to record that fact together with the prescribed particulars relating to the occupant, the landlord and the tenancy.

No. 871T.R.—17th September 1931.—Whereas the Maharaja Bahadur Sir Pradyot Coomar Tagore, Kt., the settler of certain estates settled under the Bengal Settled Estates Act, 1904 (Bengal Act III of 1904), by an instrument of settlement, dated the 30th May 1921, has applied to the Governor in Council under section 24 of that Act for permission to revoke the settlement under the said Act of the estates noted below and comprised in Part I of the First Schedule annexed to Government notification No. 2655 L.R., dated the 4th April 1921, published at pages 595 to 604, Part I of the *Calcutta Gazette*, of the 13th idem:

Now, therefore, in exercise of the powers conferred by clause (*c*) of sub-section (*2*) of section 24 of the said Act, the Governor in Council is pleased to grant permission to the said Maharaja Bahadur Sir Pradyot Coomar Tagore, Kt., to revoke the settlement of the estates noted below—

(1) Tauzi No. 1535 of the district of the 24-Parganas included in serial No. 4.

(2) Serial No. 10, district of Faridpur.

Burdwan-Hooghly-Howrah.—No. 11533L.R.—14th September 1931.—Babu Hiralal Sen, Deputy Collector and Assistant Settlement Officer, Burdwan-Hooghly-Howrah, is allowed leave on average pay from the 15th September 1931 or from any subsequent date up to the 14th October 1931 (inclusive), under rule 81 (*b*) (*ii*) of the Fundamental Rules.

24-Parganas-Rangpur.—No. 11721L.R.—19th September 1931.—Babu Umesh Chandra Banarji, Sub-Deputy Collector, employed as an Assistant Settlement Officer in the district of the 24-Parganas, is appointed to be an Assistant Settlement Officer in the district of Rangpur, with effect from the date on which he joins his settlement duties in that district.

Rangpur.—No. 11722L.R.—19th September 1931.—Under the provisions of section 3 (*14*) of the Bengal Tenancy Act, 1885 (Act VIII of 1885), Babu Umesh Chandra Banarji, Sub-Deputy Collector, is authorised to discharge, in the district of Rangpur, the functions of a Revenue Officer, under Chapter X of that Act, so far as they relate to surveys and the preparation of record-of-rights.

He is also vested with the powers of an Assistant Settlement Officer, under Chapter VII, Part I, of the rules under the Bengal Tenancy Act, in respect of the aforesaid area.

Midnapore.—No. 11731L.R.—19th September 1931.—Babu Phanindra Bhusan Mitra, Sub-Deputy Collector, at present Manager, Mahisadal Wards Estate, Mahisadal, in the district of Midnapore, is allowed leave on average pay for thirteen days under rule 81 (*b*) (*ii*) of the Fundamental Rules, with effect from the 2nd October 1931.

Land Acquisition.

NOTIFICATIONS.

Hooghly.—No. 11609L.A.—18th September 1931.—Whereas it appears to the Governor in Council that land is likely to be required to be taken by Government partly at the public expense and partly at the expense of the school authorities of the Mahesh Girls' School for a public purpose, viz., for Mahesh Girls' School, in the village of Mahesh, jurisdiction list No. 19, thana Serampur, pargana Boro, district Hooghly, it is hereby notified that for the above purpose a piece of land measuring, more or less, 0·10 of an acre, bounded on the—

North—By the land of Srimati Profulla Nalini Debi,

East—By the land of Kali Charan Ghosh,

South—By Ashutosh Chatterjee Lane with drain,

West—By the acquired land of Howrah Municipality,

is likely to be required within the aforesaid village of Mahesh.

This notification is made, under the provisions of section 4 of Act I of 1894, to all whom it may concern.

A plan of the land may be inspected in the office of the Land Acquisition Officer, Serampur.

In exercise of the powers conferred by the aforesaid section, the Governor in Council is pleased to authorise the officers for the time being engaged in the undertaking, with their servants and workmen, to enter upon and survey the land and do all other acts required or permitted by that section.

Any person interested in the above land, who has any objection to the acquisition thereof, may, within thirty days after the date on which public notice of the substance of this notification is given in the locality, file an objection in writing before the Collector of Hooghly.

Hooghly.—No. 11612L.A.—18th September 1931.—The Governor in Council is pleased to cancel the notification No. 7970L.A., dated the 4th July 1930, published under section 4 of the Land Acquisition Act, I of 1894, at pages 1043-44, Part I of the *Calcutta Gazette* of the 10th idem, in respect of the proposed acquisition of 0·0062 of an acre of land required for the construction of a privy for the staff of the Uttarpara Post Office in the village of Uttarpara, jurisdiction list No. 28, thana Serampore, pargana Boro, zilla Hooghly.

Burdwan.—No. 11618L.A.—18th September 1931.—Whereas it appears to the Governor in Council that additional strips of land are likely to be required to be taken by Government at the public expense for a public purpose, viz., for the proposed Young Road in connection with the Asansol Water Supply Scheme, in the village of Asansol Municipality, jurisdiction list No. 24, thana Asansol, pargana Shergarh, district Burdwan, it is hereby notified that for the above purpose seven pieces of land comprising parts of cadastral plots Nos. 329, 344, 2059, 2061, 2062, 2109, 2114-2117, 2124-2128, 2133, 2134 and 2207, and altogether measuring, more or less, 0·225 of an acre, are likely to be required within the aforesaid village of Asansol Municipality.

This notification is made, under the provisions of section 4 of Act I of 1894, to all whom it may concern

A plan of the land may be inspected in the office of the Special Land Acquisition Deputy Collector, Burdwan, as well as in that of the Chairman, Asansol Municipality.

In exercise of the powers conferred by the aforesaid section, the Governor in Council is pleased to authorise the officers for the time being engaged in the undertaking, with their servants and workmen, to enter upon and survey the land and do all other acts required or permitted by that section.

Any person interested in the above land, who has any objection to the acquisition thereof, may, within thirty days after the date on which public notice of the substance of this notification is given in the locality, file an objection in writing before the Collector of Burdwan.

Jalpaiguri.—No. 11624L.A.—18th September 1931.—Whereas it appears to the Governor in Council that land is likely to be required to be taken by Government at the expense of the Jalpaiguri Municipality, for a public purpose, viz., for the proposed waterworks at Jalpaiguri in the village of Kharia, pargana Baikunthapur, zilla Jalpaiguri, it is hereby notified that for the above purpose a piece of land comprising the whole of settlement plot No. 276 and parts of settlement plots Nos. 275, 277 and 304 of sheet No. 11 and measuring, more or less, 0·70 of an acre, is likely to be required within the aforesaid village of Kharia.

This notification is made, under the provisions of section 4 of Act I of 1894, to all whom it may concern.

A plan of the land may be inspected in the office of the Deputy Commissioner of Jalpaiguri.

In exercise of the powers conferred by the aforesaid section, the Governor in Council is pleased to authorise the officers for the time being engaged in the undertaking, with their servants and workmen, to enter upon and survey the land and do all other acts required or permitted by that section.

Any person interested in the above land, who has any objection to the acquisition thereof, may, within thirty days after the date on which public notice of the substance of this notification is given in the locality, file an objection in writing before the Deputy Commissioner of Jalpaiguri.

Birbhum.—No. 11630L.A.—18th September 1931.—Mr. R. A. Dutch, I.C.S., Subdivisional Officer of Rampurhat, district Birbhum, is vested with the powers of a Collector under the Land Acquisition Act, I of 1894, in that subdivision.

Burdwan-Bankura.—No. 11632L.A. — 18th September 1931.—Babu Jogesh Chandra Mitra, Deputy Magistrate and Deputy Collector, employed as Special Land Acquisition Officer, Burdwan and Bankura, is allowed leave on average pay for twenty-two days, under rule 81 (*b*) (*ii*) of the Fundamental Rules, with effect from the 27th October 1931.

Mymensingh.—No. 11636L.A —18th September 1931.—Whereas it appears to the Governor in Council that land is likely to be taken by Government at the public expense for a public purpose, viz., for pitching at mile 97¼ between Bidyaganj and Pearpur, Eastern Bengal Railway, in the villages of Dari-Kustia and Kustia, pargana Alapsingh, district Mymensingh, it is hereby notified that for the above purpose three pieces of land altogether measuring, more or less, 0·163 of an acre, bounded on the—

Block A:

North—By the river Brahmaputra,

East and West—By the river Brahmaputra and portion of district settlement plot No. 815 of Kustia,

South—By the district settlement plot No. 815 of mauza Kustia,

Block B:

North—By the river Brahmaputra,

East and West—By the river Brahmaputra and portion of district settlement plot No. 487 of mauza Dari-Kustia,

South—By the portion of district settlement plot No. 487 of mauza Dari-Kustia,

Block C:

North—By the river Brahmaputra,

East and West—By the river Brahmaputra and portion of district settlement plot No. 481 of mauza Dari-Kustia,

South—By the portion of district settlement plot No. 481 of mauza Dari-Kustia.

are likely to be required within the aforesaid villages of Dari-Kustia and Kustia.

This notification is made, under the provisions of section 4 of Act I of 1894, to all whom it may concern.

A plan of the land may be inspected in the office of the Collector of Mymensingh.

In exercise of the powers conferred by the aforesaid section, the Governor in Council is pleased to authorise the officers for the time being engaged in the undertaking, with their servants and workmen, to enter upon and survey the land and do all other acts required and permitted by that section.

In exercise of the powers conferred by section 17 (*4*) of the Land Acquisition Act, I of 1894, as amended by Act XXXVIII of 1923, the Governor in Council is pleased to direct that the provisions of section 5A of the Act shall not apply in this case.

Burdwan.—No. 11725L.A.—19th September 1931.—The Governor in Council is pleased to cancel the notification No. 6147 L. A., dated the 2nd May 1931, under section 4 of the Land Acquisition Act, published at page 541, Part I of the *Calcutta Gazette* of the 7th idem, in respect of the proposed acquisition of 0·61 acre of land required for the construction of reach No. 6 of the main canal, Damodar Canal Project, in the village of Sasanga, pargana Burdwan, zilla Burdwan.

Howrah.—No. 11728L.A.—19th September 1931.—The Governor in Council is pleased to cancel so much of the notification No. 12974 L. A., dated the 10th November 1930, under section 4 of the Land Acquisition Act, published at page 1769, Part I of the *Calcutta Gazette* of the 13th November 1930, in respect of the proposed acquisition of land required by the Howrah-Sheakhala Light Railway Company, Limited, for a loop at Bantra Uttar in the village of Bantra Uttar, pargana Khosalpur, district Howrah, as relates to the area measuring, more or less 0·002 of an acre of land, bounded on the—

North—By the land under acquisition.

East—By the land of Keshab Chandra Banerjee.

South—By the municipal road.

West—By the land of Howrah-Sheakhala Light Railway.

Burdwan.—No. 11736L.A.—19th September 1931.—Whereas it appears to the Governor in Council that land is likely to be required to be taken by Government at the public expense for a public purpose, viz., for constructing the 1st, 2nd, 3rd and 4th miles (up to chainage 18,357 feet) of distributary No. 6, branch canal, Damodar Canal Project, in the village of Jaynagar or Wargram, jurisdiction list No. 11, thana Bhatar, pargana Azmatshahi, and in the villages of Belgram, Belari, Bhada and Brajapur, jurisdiction list Nos. 174, 180, 178 and 177, respectively, thana Ausgram, pargana Burdwan, district Burdwan, it is hereby notified that for the above purpose a piece of land measuring, more or less, 15·91 acres, starting from chainage 0 which is the central point of chainage 53,983 feet of the branch canal, Damodar Canal Project, in mauza Jaynagar or Wargram, and running generally towards the south through mauzas Jaynagar or Wargram, Belgram, Belari, Bhada and terminating at chainage 18,357 feet in mauza Brajapur, varying in width from 30 feet to 250 feet and being 18,302 feet in length, is likely to be required within the aforesaid villages of Jaynagar or Wargram, Belgram, Belari, Bhada and Brajapur.

This notification is made, under the provisions of section 4 of Act I of 1894, to all whom it may concern.

A plan of the land may be inspected in the office of the Special Land Acquisition Deputy Collector, Burdwan, as well as in that of the Executive Engineer, Damodar Canal Division, Burdwan.

In exercise of the powers conferred by the aforesaid section, the Governor in Council is pleased to authorise the officers for the time being engaged in the undertaking, with their servants and workmen, to enter upon and survey the land and do all other acts required or permitted by that section.

Any person interested in so much of the above land as are not waste or arable, who has any objection to the acquisition thereof, may, within thirty days after the date on which public notice of the substance of this notification is given in the locality, file an objection in writing before the Collector of Burdwan.

In exercise of the powers conferred by section 17 (*4*) of the Land Acquisition Act I of 1894, as amended by Act XXXVIII of 1923, the Governor in Council is pleased to direct that the provisions of section 5A of the Act shall not apply to the waste or arable portion of the land in this case.

DECLARATIONS.

Burdwan.—No. 11591L.A. — 18th September 1931.—Whereas it appears to the Governor in Council that land is required to be taken by Government at the public expense for a public purpose, viz., for constructing an approach channel of the distributary No. 1A of distributary No. 1, Branch Canal, Damodar Canal Project, in the village of Babla, jurisdiction list No. 98, in thana Balsi, pargana Bagha, district Burdwan, it is hereby declared that for the above purpose a piece of land comprising parts of cadastral plot Nos. 8, 12, 14 and 15 measuring, more or less, 0·33 of an acre, is required within the aforesaid village of Babla.

This declaration is made, under the provisions of section 6 of Act I of 1894, to all whom it may concern.

A plan of the land may be inspected in the office of the Special Land Acquisition Officer, Burdwan, as well as in that of the Executive Engineer, Damodar Canal Division, Burdwan.

Faridpur.—No. 11603L.A. — 18th September 1931.—Whereas it appears to the Governor in Council that land is required to be taken by Government at the expense of the Gopalganj union board, for a public purpose, viz., for a trenching ground at Gopalganj, in the village of Khatra, pargana Makimpur, police-station Gopalganj, zilla Faridpur, it is hereby declared that for the above purpose a piece of land comprising whole of cadastral survey plots Nos. 609 and 610 and measuring, more or less, 0·47 of an acre, is required within the aforesaid village of Khatra.

This declaration is made, under the provisions of section 6 of Act I of 1894, to all whom it may concern.

A plan of the land may be inspected in the office of the Subdivisional Officer of Gopalganj.

Faridpur.—No. 11606L.A. — 18th September 1931.—Whereas it appears to the Governor in Council that additional land is required to be taken by Government at the expense of the Gopalganj union board, for a public purpose, viz., for trenching ground at Gopalganj, in the village of Khatra, pargana Makimpur, police-station Gopalganj, zilla Faridpur, it is hereby declared that for the above purpose a piece of land comprising whole of cadastral survey plots Nos. 461 and 465 and part of cadastral survey plot No. 462, and measuring, more or less, 0·62 of an acre, is required within the aforesaid village of Khatra.

This declaration is made, under the provisions of section 6 of Act I of 1894, to all whom it may concern.

A plan of the land may be inspected in the office of the Subdivisional Officer of Gopalganj.

Murshidabad.—No. 11615L.A.—18th September 1931.—Whereas it appears to the Governor in Council that land is required to be taken by Government at the public expense for a public purpose, viz., for new ghat yard of the Eastern Bengal Railway at Lalgola Ghat in the village of Kodalkati, pargana Islampur, zilla Murshidabad, it is hereby declared that for the above purpose a strip of land measuring, more or less, 1·994 acres equivalent to 6 bighas 11 chittaks and starting from chainage 1,713 feet from the facing point of Shekalipur Ghat line which is 1,436 feet north of the railway, 141st mile post and deviating towards west with a length of 1,175 feet where the proposed railway line terminates and breadth varying from 30 feet to 100 feet, is required within the aforesaid village of Kodalkati.

This declaration is made, under the provisions of section 6 of Act I of 1894, to all whom it may concern.

A plan of the land may be inspected in the office of the Subdivisional Officer, Lalbagh.

Howrah.—No. 11621L.A. — 18th September 1931.—Whereas it appears to the Governor in Council that land is required to be taken by Government at the expense of the Howrah Municipality for a public purpose, viz., for easing out bad corners at the junction of Babudanga Road and Siva Gopal Banerjee Lane, in the village of Sulkea, pargana Paikan, zilla Howrah, it is hereby declared that for the above purpose two pieces of land altogether, more or less, 0·014 of an acre, bounded on the—

Plot No. 1:

North—Lands of Haran Chandra Mukherji,

East—Siva Gopal Banerjee Lane,

South—Babudanga Road,

West—Lands of Haran Chandra Mukherji,

Plot No. 2:

North and East—Lands of Bishnupada Atta,

South—Babudanga Road,

West—Siva Gopal Banerjee Lane,

are required within the aforesaid village of Sulkea.

This declaration is made, under the provisions of section 6 of Act I of 1894, to all whom it may concern.

A plan of the land may be inspected in the office of the Collector of Howrah.

Birbhum.—No. 11627L.A. — 18th September 1931.—Whereas it appears to the Governor in Council that land is required to be taken by Government at the public expense for a public purpose, viz., for the distributary No. 5 of the Bakreswar Canal in the villages of Bonsanka, Keola, Shirshita, Palashi, Babupur and Bodpur, jurisdiction list Nos. 146, 163, 162, 151, 155 and 154, respectively, in thana Suri, parganas Alinagar and Jainujal, district Birbhum, it is hereby declared that for the above purpose a piece of land comprising cadastral plots Nos. 3024, 3023, 3029, 3022, 3080, 3031 and 3019 of village Bonsanka, portion of plots Nos. 71, 69, 72, 70, 68, 96, 98, 94, 66 and 67 of village Keola, portions of plots Nos. 56, 57, 58, 59, 60, 63, 64, 67, 68, 70, 71, 98, 99, 379, 319, 317, 316, 315, 304, 303, 302, 301, 299, 297, 300, 298, 294, 637, 1263, 1284, 1285, 1288, 1289, 1290, 1291, 1307, 1308, 1309, 1311, 1317, 1316, 1164, 1377, 1378, 1380, 1379, 1512, 1514, 1506, 1505, 1503, 1502, 1551, 1553, 1554, 1555, 1556, 1496, 1495, 1494, 1493, 2924, 2918, 2920, 1921, 2919 and 2951 of village Shirshita, portions of plots Nos. 45, 47, 44, 43, 41, 38, 37 and 35 of village Palashi, portions of plots Nos. 216, 217, 215, 224, 225, 246, 245, 247, 248, 249, 259, 260, 258 and 257 of village Babupur, portions of plots Nos. 24, 23, 22, 26, 27, 28, 33, 31 and 32 of village Bodpur, and measuring, more or less, 13·043 acres, is required within aforesaid villages of Bonsanka, Keola, Shirshita, Palashi, Babupur and Bodpur.

This declaration is made, under the provisions of section 6 of Act I of 1894, to all whom it may concern.

A plan of the land may be inspected in the office of the Collector of Birbhum.

Tippera.—No. 11739L.A. — 21st September 1931.—Whereas it appears to the Governor in Council that land is required to be taken by Government at the public expense for a public purpose, viz., for the construction of a railway bridge over the Meghna river between Ashuganj and Bhairab Bazar, in the villages of Baikunthapur, Jatrapur, Sonarampur and Charchartala, jurisdiction list Nos. 179, 177, 178 and 176, respectively, thana Nabinagar, pargana Sarail, district Tippera, it is hereby declared that for the above purpose three blocks of land altogether measuring, more or less, 61·31 acres, as detailed below:—

Block No. I:

Comprising cadastral survey plots Nos. 213, 215 to 219 and parts of cadastral survey plots Nos. 208, 210 to 212, 214, 220 to 222, 224 and 276 in village Baikunthapur and part of cadastral survey plot No. 405 in village Jatrapur.

Block No. II:

Comprising cadastral survey plots Nos. 105 to 109, 150 to 158, 160 to 161 and 274 and parts of cadastral survey plots Nos. 100, 101, 104, 110, 111, 137, 143 to 145, 147 to 149, 159, 162 to 163, 165 and 275 in village Baikunthapur; cadastral survey plots Nos. 369 to 375, 379 to 382, 384, 398, 399 and 1481 to 1483 and parts of cadastral survey plots Nos. 376, 378, 383, 385, 386, 396 and 397 in village Jatrapur; cadastral survey plots Nos. 292, 300 to 304, 314 to 323 and 418 and parts of cadastral survey plots Nos. 290, 291, 293, 294, 298, 299, 305, 311 to 313, 324 to 325, 417 and 419 to 421 in village Sonarampur.

Block No. III:

Comprising cadastral survey plots Nos. 193-200 and 221-222 and parts of cadastral survey plots Nos. 191-192 and 223 in village Sonarampur; cadastral survey plots Nos. 1-3 in village Jatrapur and cadastral survey plots Nos. 33, 35 to 43, 103 to 104, 109 to 112, 114 to 126 and 2969 and parts of cadastral survey plots Nos. 30 to 32, 34, 44 to 45, 98, 101 to 102, 105 to 108 and 113 in village Charchartala,

are required within the aforesaid villages of Baikunthapur, Jatrapur, Sonarampur and Charchartala.

This declaration is made under the provisions of section 6, Act I of 1894, to all whom it may concern.

A plan of land may be inspected in the office of the Special Land Acquisition Officer at Ashuganj.

Howrah.—No. 11742L.A.—21st September 1931.—Whereas it appears to the Governor in Council that land is required to be taken by Government at the expense of the Howrah Municipality for a public purpose, viz., for widening a portion of Dinu 1st Lane and Bisweswar Banerjee Lane, in the village of Dakshin-Bantra, pargana Boro, zilla Howrah, it is hereby declared that for the above purpose a piece of land measuring, more or less, 0·03 of an acre, bounded on the—

North—By the land of Surya Kumar Majhi, tank of Fakir Chandra Ghosh and Dinu 1st Lane,

East—By Dinu 1st Lane,

South—By Bisweswar Banerjee Lane,

West—By the tank of Fakir Chandra Ghosh,

is required within the aforesaid village of Dakshin-Bantra.

This declaration is made, under the provisions of section 6 of Act I of 1894, to all whom it may concern.

A plan of the land may be inspected in the office of the Collector of Howrah.

Faridpur.—No. 11745L.A.—21st September 1931.—Whereas it appears to the Governor in Council that land is required to be taken by Government at the public expense for a public purpose, viz., for formation of the alignment of miles 10 and 11 of the Kalukhali-Bhatiapara Railway, in the village of Faridpur, jurisdiction list No. 157, in thana Baliakandia, pargana Mahimsahi, district Faridpur, it is hereby declared that for the above purpose two pieces of land, comprising cadastral plots Nos. 532, 533, 545, 547, 548, 551, 553, 554 and 560, and altogether measuring, more or less, 0·215 of an acre, are required within the aforesaid village of Faridpur.

This declaration is made, under the provisions of section 6 of Act I of 1894, to all whom it may concern.

A plan of the land may be inspected in the office of the Special Land Acquisition Officer, Faridpur, as well as in that of the Chief Engineer, Eastern Bengal Railway, at No. 3, Koilaghat Street, Calcutta.

Forests.

NOTIFICATION.

Darjeeling.—No. 794T.R.—12th September 1931.—On return from the leave granted to him in Revenue Department (Forests) notification No. 679For., dated the 16th January 1931, Mr. R. A. M. Macalpine, Deputy Conservator of Forests, is posted to the Darjeeling Division, as an attached officer, with headquarters at Lepcha Jagat.

H. C. V. PHILPOT,

Secy. to the Govt. of Bengal.

IRRIGATION DEPARTMENT.

NOTIFICATION.

No. 18-I.—8th September 1931.—The following draft of amendment, which, in exercise of the powers conferred by sections 78 and 99 of the Bengal Irrigation Act, 1876 (Bengal Act III of 1876), the Governor in Council intends to make in the rules and rates for the supply of water from the Bakreswar Canal (published in Bengal Government, Irrigation Department, notification No. 14-I., dated the 11th August 1930, at pages 1312-17, Part I of the *Calcutta Gazette* of the 21st idem) is hereby published for the information of persons likely to be affected thereby.

II. The draft will be taken into consideration on or after the 17th October, 1931, and any objections or suggestions received by the undersigned before that date will be duly considered :—

Draft amendment.

For the schedule of rates for water supplied from the Bakreswar Canal in the said rules and rates, *substitute* the following :—

Schedule of rates for water supplied from the Bakreswar Canal.

	Per season*. Rs. A.
For water supplied on a lease for a term of years—supply given from 16th June to 15th November of each year ..	4 8
The rate is due in two equal instalments on the 1st of January and the 1st of February of each year : Provided that when the sum payable by any lessee is less than Rs. 10, the whole amount shall be due on the 1st of January each year.	
For water supplied on a covering lease to irrigate lands for which a preliminary application for a lease for a term of years has been received and failing the completion of the same. The rate is due as in the case of a lease for a term of years	5 0 Per acre.
For water supplied on a season lease for the irrigation of any crops between 16th November and 15th June ..	5 0
The rate is payable on 1st July following.	
For the unauthorised use of water or for the waste of water such rate may be charged as determined by the Divisional Canal Officer under rule 21, subject to a maximum of Rs. 7-8 per acre or Rs. 3 per 10,000 cubic feet if taken into tanks, etc. Such rate shall be due on presentation of the notice of assessment to the person assessed.	

*NOTE.—Those taking leases during the season of 1931-32 only shall be given leases for five years at Re. 1-8 for the current year 1931-32, Rs. 3 for 1932-33, and Rs. 4-8 per annum for each of the the three following years, viz., 1933-34, 1934-35, 1935-36, and the rate for covering leases will be 50 per cent. higher, *i.e.*, Rs. 2-4.

H. C. V. PHILPOT,
Secy. to the Govt. of Bengal.

BOARD OF REVENUE, BENGAL.

ERRATUM.

Read "Jameson Island" *for* "James Island" in columns 2 and 3 against tauzi No. 3193 in the Declaration, dated the 15th August 1931, published at page 990 of the *Calcutta Gazette*, Part I, dated the 20th August 1931.

D. MACPHERSON,
Secy. to the Board of Revenue, Bengal.

SHERIFF'S OFFICE, THE 27TH AUGUST 1931.

Notice is hereby given that the Fifth Criminal Sessions of the year 1931 of the High Court of Judicature at Fort William in Bengal for the town of Calcutta and Factory of Fort William and the places subordinate thereto, will be held at the Court House, in the town of Calcutta, on Monday, the 7th day of December next, at 11 o'clock in the forenoon, and thenceforward from day to day until the said sessions be over. And it is hereby proclaimed that all persons who are to prosecute any of the prisoners to be brought up for trial at the said sessions be present then and there to prosecute.

P. N. TAGORE, *Sheriff.*

শরিফ আফিস, সন ১৯৩১ সাল, তারিখ ২৭শে আগষ্ট।

সকলকে সমাচার দেওয়া যাইতেছে যে সুবে বাঙ্গালার ফোর্ট উইলিয়ম দুর্গের অধীন সহর কলিকাতার ও অন্যান্য স্থানের ফৌজদারী বিচার নিষ্পত্তি জন্য আগামী সন ১৯৩১ সালের ৭ই ডিসেম্বর, সোমবার বেলা ১১ ঘটিকার সময় এবং যে পর্য্যন্ত সেশিয়ানের কার্য্য শেষ না হয় প্রতিদিন উক্ত সময়ে কলিকাতার হাইকোর্টের আপন আদালত ঘরে সন ১৯৩১ সালের পঞ্চম ক্রিমিনেল সেশিয়ান বসিবেক এবং এতদ্দ্বারা প্রচার করা যাইতেছে যে, যে সকল ব্যক্তি কোন কয়েদির বিরুদ্ধে ফৌজদারী মিছিল করিবেক তাহারা উক্ত স্থানে উক্ত সময়ে হাজির থাকিয়া মোকদ্দমা করে, ইতি।

পি, এন, ঠাকুর,
শরিফ।

ORDERS BY COMMISSIONERS OF DIVISIONS.

Burdwan Division—Chinsura.

No. 1272M.—12th September 1931.—It is hereby notified for general information that the next general election of Commissioners of the Katwa Municipality in the district of Burdwan will be held on Monday, the 21st March 1932.

No. 2835J.G.—13th September 1931.—Babu Sharat Chandra Guha, Sub-Deputy Collector and Sub-Deputy Magistrate, posted to this division under Government notification No. 8115A., dated the 9th September 1931, is posted to the Rampurhat subdivision in the district of Birbhum on general duty.

No. 1281M.—14th September 1931.—It is hereby notified for general information that Wednesday, the 28th October 1931, has been fixed for holding a by-election for the election of a Commissioner for Ward No. II of the Chandrakona Municipality in the district of Midnapore, in place of Babu Nil Kantha De, deceased.

No. 1990L.S.-G.—16th September 1931.—It is hereby notified for general information that, under section 19 (*1*) of the Bengal Local Self-Government Act (Bengal Act III of 1885), Babu Shyama Charan Mukherjee has been duly elected to be a member of the Midnapore district board by the Sadar local board in the district of Midnapore, *vice* Babu Barendra Krishna Pal, deceased.

L. B. BURROWS, *Commissioner (offg.)*.

Birbhum, the 19th September 1931.

No. 11L.S.-G.—It is hereby notified for general information that, under section 13 of the Bengal Village Self-Government Act, 1919 (Bengal Act V of 1919), read with rule 35 of the rules for the election and appointment of members of union boards, etc., Babu Ashutosh Chatterji has been duly elected to be a member for Ward No. I of the Barsal union board in police-station Rampur Hat in the Rampur Hat subdivision of the district of Birbhum, *vice* Munshi Ebadat Ali Sarkar, deceased.

G. S. DUTT, *District Magistrate*.

Chittagong Division—Chittagong.

No. 3520G.—15th September 1931.—In exercise of the power conferred by section 25 of the Bengal Local Self-Government Act (Act III of 1885), the election of Maulvi Maqbul Ahmed by the members of the Feni local board in the district of Noakhali to be their Chairman is hereby approved.

W. H. NELSON, *Commissioner*.

Dacca Division—Dacca.

No. 4629J.—14th September 1931.—Maulvi Habibur Rahman, Sub-Deputy Collector, who has been posted to the Dacca division in Government notification No. 7969A., dated the 4th September 1931, is appointed to be Circle Officer, Tangail Circle, in the district of Mymensingh.

No. 4634J.—14th September 1931.—Babu Nirmal Kumar Sen, Sub-Deputy Collector, who has been posted to the Dacca division in Government notification No. 7969A., dated the 4th September 1931, is appointed to be Circle Officer of Gopalpur Circle in Tangail subdivision of the district of Mymensingh.

No. 4640J.—14th September 1931.—Babu Atindra Nath Mukharji, Sub-Deputy Collector, who has been posted to the Dacca division in Government notification No. 7969A., dated the 4th September 1931, is appointed to be Circle Officer of Gaurnadi Circle in the district of Bakarganj.

No. 4645J.—14th September 1931.—Babu Amar Nath Mukharji, Sub-Deputy Collector, who has been transferred to the Dacca division in Government notification No. 7969A., dated the 4th September 1931, is posted to the headquarters station of the district of Bakarganj on general duty.

No. 4651J.—14th September 1931.—Babu Jatindra Krishna Ghosh, Sub-Deputy Collector, who has been transferred to the Dacca division in Government notification No. 7969-A., dated the 4th September 1931, is posted to the headquarters station of the district of Faridpur on general duty.

No. 4657J.—14th September 1931.—Maulvi Salehuddin Ahmed, Sub-Deputy Collector, who has been transferred to the Dacca division in Government notification No. 8121A., dated the 9th September 1931, is posted temporarily to the headquarters station of the district of Dacca.

No. 4693J.—15th September 1931.—It is hereby notified for general information that the next general election of the Commissioners of the Pirojpur Municipality in the district of Bakarganj will be held on Wednesday, the 9th March 1931.

No. 4771J.—18th September 1931.—It is hereby notified for general information that, under rule 20 (*b*) of the manual of rules for the management of charitable hospitals and dispensaries in Bengal, the following gentlemen are appointed to be members of the committee for the management of the charitable dispensary at Baligaon in the Munshiganj subdivision of the district of Dacca:—

The Subdivisional Officer, Munshiganj (*ex-officio*).
The President, Arial-Baligaon union board (*ex-officio*).
The President, Lohajang union board (*ex-officio*).
The Circle Officer, Munshiganj (*ex-officio*).
Babu Jitendra Mohan Pal Choudhury.
Babu Ahindra Mohan Pal Chaudhury.
Babu Binoy Krishna Talukdar.
Babu Santi Bhusan Das Gupta *alias* Aditya Kumar Das Gupta.
Babu Purna Chandra Chakravarty.
Babu Aditya Mohan Das Gupta.
Babu Lal Behari Chakravarty.
Muhammad Azimuddin Ahmed.

H. GRAHAM, *Commissioner (offg.)*.

Faridpur, the 21st September 1931.

No. 6573J.—It is hereby notified for general information that—

(*a*) Under sub-section (*2*) of section 6 of the Bengal Village Self-Government Act, 1919 (Bengal Act V of 1919), the following gentlemen have been duly elected to be members of the Bhanga union board in police-station Bhanga in the Sadar subdivision of the Faridpur district:—

Khan Sahib Maulvi Abdul Gafur *alias* Chand Mian.
Munshi Saiduddin.
Munshi Mozaharuddin Ahmed.
Munshi Nuruddin Ahmed.
Munshi Helaluddin Bepari.
Babu Tara Chand Malo.

(*b*) Under sub-section (*3*) of section 6 of the Act, the following gentlemen have been appointed by the District Magistrate of Faridpur to be members of the said union board:—

Babu Aswini Kumar Sen.

Babu Rasharaj Das.

Munshi Abdul Wahed Molla *alias* Lal Mian.

A. C. DUTTA, *District Magistrate.*

Presidency Division—Calcutta.

No. 1680R.G.—15th September 1931.—Babu Gyan Chandra Chakrabatti, Sub-Deputy Collector, Tangail, Mymensingh, who has been transferred to this division, is posted to Meherpur, Nadia, as Circle Officer.

No. 1690R.G.—17th September 1931.—Maulvi Abdul Ghafur, No. I, Sub-Deputy Collector, Jangipur, Murshidabad, is transferred to Barrackpore, 24-Parganas.

No. 1696R.G.—17th September 1931.—Maulvi Muhammad Hossain, Sub-Deputy Collector and Circle Officer, Jangipur, Murshidabad, is appointed a 2nd officer there.

No. 1701R.G.—17th September 1931.—Babu Subodh Chandra Das Gupta, Sub-Deputy Collector, Barrackpore, 24-Parganas, is transferred to Jangipur, Murshidabad, as Circle Officer.

No. 1726R.G.—19th September 1931.—Babu Birendra Lal Gupta, Sub-Deputy Collector, on leave, is posted temporarily to Sadar, 24-Parganas.

F. W. ROBERTSON, *Commissioner (offg.).*

Jessore, the 17th September 1931.

It is hereby notified under rule 19 (*5*) of the Bengal Electoral Rules that Babu Jitendra Nath Sen, a duly nominated member of the Bengal Legislative Council from the Jessore South Non-Muhammadan Constituency, has lodged with me his return of election expenses and declaration on the 16th September 1931. The said return may be inspected at the office of the undersigned on payment of proper fees between the hours of 7 a.m. and 10 a.m.

K. G. MORSHED, *Returning Officer,*
Jessore South Non-Muhammadan Constituency.

Khulna, the 18th September 1931.

It is hereby notified for general information that, under section 13 of the Bengal Village Self-Government Act (Bengal Act V of 1919) read with rule 35 of the rules for the election and appointment of members, etc., under the said Act, Munshi Momiruddi Nakib and Babu Parbati Charan Roy have been duly elected to be members of Kachua union board in Kachua police-station of Bagerhat subdivision of the district of Khulna, *vice* Munshi Muniruddi Nakib, deceased, and Munshi Mir Nawabali, removed under section 12 (*1*) (*d*) of the Bengal Village Self-Government Act.

E. W. HOLLAND, *District Magistrate.*

Rajshahi Division—Jalpaiguri.

No. 3549J.—15th September 1931.—Babu Saileswar Sinha Ray, Sub-Deputy Collector, Rajshahi Division, is posted to Rajshahi Sadar to work in the general line.

No. 3586J.—18th September 1931.—Babu Lalit Kumar Datta, Sub-Deputy Collector and Circle Officer, Balurghat, Dinajpur, is allowed leave on average pay from 27th October 1931 to 7th November 1931 (both the days inclusive), under rule 81 (*b*) (*ii*) of the Fundamental Rules.

Erratum.—No. 3613J. — 19th September 1931.—In this office notification No. 537J., dated the 14th February 1931, publishing the names of gentlemen appointed to be members of the committee for the management of the charitable dispensary at Malda in the district of Bogra, *read* the name Babu Surendra Nath Sarkar instead of Babu Sourindra Nath Sarkar.

J. G. DRUMMOND, *Commissioner (offg.).*

Rajshahi, the 11th September 1931.

It is hereby notified for general information that, under sub-section (*3*) of section 6 of the Bengal Village Self-Government Act, 1919 (Bengal Act V of 1919), the following gentleman has been appointed by the District Magistrate, Rajshahi, to be a member of the undermentioned union board in police-station Godagari in the Sadar subdivision of the district of Rajshahi, in place of Munshi Ayub Ali Mandal, deceased.

Police-station Godagari.

Matikata union board.

Ward No. II.

Munshi Umedullah Mandal.

L. G. PINNELL, *District Magistrate.*

Rangpur, the 18th September 1931.

No. 5245J.—It is hereby notified for general information that, under section 13 of the Bengal Village Self-Government Act, 1919 (Bengal Act V of 1919), Munshi Osmanuddin Mandal has been duly elected to be a member of Banagram union board in police-station Sadullapur in the Gaibandha subdivision of the Rangpur district, *vice* Munshi Rasimuddin Sircar, deceased.

T. M. Dow, *District Magistrate.*

Jalpaiguri, the 18th September 1931.

It is hereby notified for general information that, under section 13 of the Bengal Village Self-Government Act, 1919 (Act V of 1919), Babu Lakshmi Narayan Saha has been duly appointed to be a member of the Debiganj union board in the Sadar subdivision of the district of Jalpaiguri, in place of Babu Rohini Kanta Vidyaratna, resigned.

It is hereby notified for general information that, under section 13 of the Bengal Village Self-Government Act, 1919 (Act V of 1919), Babu Rajendra Nath Ghosh has been duly appointed to be a member of the Boda union board, police-station Boda in the Sadar subdivision of the district of Jalpaiguri, in place of Babu Debnath Saha, resigned.

C. MUKERJEE, *Deputy Commissioner (offg.).*

Dinajpur, the 19th September 1931.

No. 5239J.—It is hereby notified for general information that, under section 13 of the Bengal Village Self-Government Act, 1919 (Bengal Act V of 1919), Babu Jamini Kanta Das of Khamuria has been appointed to be a member of the Itahar union board No. IV in police-station Itahar in the Sadar subdivision of the district of Dinajpur, *vice* Babu Gopi Charan Das of Khamuria, deceased.

L. C. GUHA, *District Magistrate.*

The Calcutta Gazette

THURSDAY, SEPTEMBER 24, 1931.

Part IA

Orders and Notifications by the Government of India republished for general information.

LEGISLATIVE DEPARTMENT.

NOTIFICATIONS.

Simla, the 4th September, 1931.

No. F. 408-(i)/31-C. & G.—In exercise of the powers conferred by rule 15 of the Council of State Electoral Rules, the Governor General in Council is pleased to direct that the following further amendment shall be made in the Council of State (Bengal) Electoral Regulations published with the Notification of the Government of India in the Legislative Department No. 199, dated the 6th September 1923, namely:—

In Form I annexed to the said Regulations, in the Form of back of Ballot Paper for the words and brackets "(or who has been identified to my satisfaction)" the following shall be substituted, namely:—

"[or who has been identified to my satisfaction by

(Name).....

(Address).....]"

No. F. 408-(ii)/31-C. & G.—In exercise of the powers conferred by rule 15 of the Legislative Assembly Electoral Rules, the Governor General in Council is pleased to direct that the following further amendment shall be made in the Legislative Assembly (Bengal) Electoral Regulations published with the Notification of the Government of India in the Legislative Department No. 185, dated the 17th August, 1923, namely:—

In Form VI annexed to the said Regulations, in the Form of back of Ballot Paper for the words and brackets "(or who has been identified to my satisfaction)" the following shall be substituted, namely:—

"[or who has been identified to my satisfaction by

(Name).....

(Address).....]"

No. F. 145-III/31 (ii)/C. & G.—The Governor General is pleased to accept the resignation by the Honourable Mr. J. A. Woodhead, C.I.E., of his office of Member of the Council of State.

L. GRAHAM,

Secy. to the Govt. of India.

FINANCE DEPARTMENT.

RESOLUTION.

Simla, the 5th September 1931.

No. D./5905-F.—The Indian Central Banking Enquiry Committee was appointed in the Government of India Resolution No. F. 2 (4)/F.-29, dated 22nd July 1929, with Sir Bhupendra Nath Mitra, K.C.S.I., K.C.I.E., C.B.E., as Chairman, and Sir Purshotamdas Thakurdas, Kt., C.I.E., M.B.E., as Vice-Chairman. The Enquiry was inaugurated in response to a demand from the Federation of Indian Chambers of Commerce and Industry and the Associated Chambers of Commerce of India and Ceylon at their annual meetings in 1927 and 1928, and the plan of Enquiry was settled in consultation with the two commercial bodies mentioned above and after discussions with the representatives of the various political parties in the Central Legislature. According to this plan, a number of Provincial Committees were appointed to deal with agricultural credit, including co-operative credit, credit facilities for small industries, mortgage banks, financing of internal trade and stimulation of habits of investment and attraction of banking deposits and to make a report to the Central Committee. After the Provincial Committees had reported in the summer of 1930, the Central Committee continued the work by making investigation into those fields of banking, such as regulation of banking, banking education and credit facilities for India's main industries, which were excluded from the scope of the Enquiry by Provincial Committees. The Central Committee completed the survey of the whole banking field by the end of 1930. At this stage the Government of India invited a small body of Foreign Banking Experts to assist the Central Committee in making their final recommendations. The Foreign Experts after holding joint discussions with the Central Committee presented to the Central Committee, for submission to the Government of India, a separate report dealing with certain differences of opinion between themselves and the Central Committee. The Central Committee held their final deliberations in March and April 1931, and their Report along with the Report of the Foreign Banking Experts was received by the Government of India on the 14th June 1931.

2. The Governor General in Council desires to take this opportunity of recording his appreciation of the services rendered by the Chairman, Vice-Chairman and members of the Committee. The Report bears testimony to the care and thoroughness with which the Enquiry, which has been prolonged and arduous, has been conducted and brought to a successful conclusion by the members of the Committee.

3. The Governor General in Council has already communicated to the Chairman and members of the Provincial Committees, through the Provincial Governments concerned, his sense of appreciation of the services rendered by them. He wishes to take this opportunity again of expressing his cordial appreciation of the valuable work done by the Provincial Committees.

4. The Foreign Banking Experts came out to India at great personal inconvenience and considerable sacrifice in response to invitations from the Government of India. The Governor General in Council desires to express his cordial thanks to these gentlemen both on his own behalf and on behalf of the Indian Central Banking Enquiry Committee for the assistance they gave to the Central Committee in the short space of time at their disposal.

5. The recommendations of the Committee are receiving the careful and earnest attention of the Government. Meanwhile the Governor General in Council has decided that the Report be published for general information on the 16th September 1931.

ORDER.—Ordered that a copy of the above Resolution be communicated to all Local Governments and Administrations, all Departments of the Government of India, the Central Board of Revenue, the High Commissioner for India, the Chairman, Vice-Chairman and the members of the Indian Central Banking Enquiry Committee, the Foreign Banking Experts (through the India Office), the Chairmen and members of the Provincial and Centrally administered areas Banking Enquiry Committees for information.

Ordered also that it be published in the *Gazette of India*.

H. DENNING,
Secy. to the Govt. of India.

FINANCE DEPARTMENT (CENTRAL REVENUES).

NOTIFICATION.

STAMPS.

Simla, the 12th September 1931.

No. 6.—In exercise of the powers conferred by clause (*a*) of section 9 of the Indian Stamp Act, 1899 (II of 1899), and in supersession of all previous Notifications issued from time to time under the said clause of the said section, the Governor General in Council is pleased to reduce, to the extent set forth in each case, the duties chargeable under the said Act in respect of the instruments hereinafter described under Nos. 3, 4, 10, 23, 25, 74, 88, 89, 90, 91, 98, 102, 109, 110 and 111, and to remit the duties so chargeable in respect of instruments of the other classes hereinafter described:—

A.—LAND REVENUE.

General.

1. Lease or counterpart thereof executed at the time of settlement made directly by the Government with the existing occupant of land, whether a zamindar or a tenant, and whether self-cultivating or not;

Provided that no fine or premium is paid in consideration of the lease.

2. Agreement of the kind described in the Dekkhan Agriculturists' Relief Act, 1879 (XVII of 1879), section 43.

3. Promissory note payable on demand to a certain person, and not to order or bearer, when such note is executed by an agriculturist, and is attested at the time of execution by a Village Registrar, under section 57 of the Dekkhan Agriculturists' Relief Act, 1879 (XVII of 1879).—Duty reduced to one anna.

4. Promissory note payable otherwise than on demand, and not payable at more than one year after date or sight, to a certain person, and not to order or bearer, when such note is executed by an agriculturist, and is attested at the time of execution by a Village Registrar, under section 57 of the Dekkhan Agriculturists' Relief Act, 1879 (XVII of 1879).—Duty reduced to the amount chargeable under Article No. 13 (*b*) of Schedule 1 of the Indian Stamp Act, 1899, on a bill of exchange for the same amount.

5. Instrument executed for the purpose of securing the repayment of a loan made, or to be made, under the Land Improvement Loans Act, 1883 (XIX of 1883) or the Agriculturists' Loans Act, 1884 (XII of 1884), including an instrument whereby a landlord binds himself to consent to the transfer, in the event of default in such repayment, of any land, or interest in land, on the security of which any such loan is made to his tenant.

6. Receipt given by a person, for advances exceeding Rs. 20 received by him from the Government under the Agriculturists' Loans Act, 1884 (XII of 1884).

* * * * * *

B.—OPIUM EXCISE AND HEMP DRUGS.

* * * * * *

32. Bond when executed by the surety of a middleman (lambardar or khattadar) taking an advance for the cultivation of the poppy for the Government.

33. Agreement or memorandum of agreement made by a raiyat or by a middleman (lambardar or khattadar) for the cultivation of the poppy for the Government.

34. Power-of-attorney executed in favour of a lambardar or khattadar by an opium cultivator, who does not attend personally to receive an advance or to enter into a contract for the cultivation of the poppy for the Government.

35. Instrument of the nature of a mortgage deed when executed by the surety of a middleman (lambardar or khattadar) taking an advance for the cultivation of the poppy for the Government.

* * * * * *

38. Agreement or memorandum of agreement made by a raiyat for, or in respect of, the cultivation of the hemp plant in the district of Rajshahi.

* * * * * *

C.—FOREST DEPARTMENT.

40. Agreement or security bond required to be executed, under the rules to regulate the training and appointments in the Subordinate Forest Service, by a student and his surety previous to his entry into a Forest School or College in British India.

41. Instrument in the nature of a conveyance by the Government of standing trees or any other forest produce in a Government forest; and also the following instruments:—

(1) *In Madras, Bengal, Bihar and Orissa, Central Provinces and Assam.*

(*i*) Contract for the collection of minor produce, barks, etc.;

(*ii*) Contract for felling and removing tree;

(*iii*) Contract for the collection, removal and disposal of stock in coupes subject to obligation to coppice and clear the area;

(*iv*) Contract for the purchase of timber or firewood to be felled or cut departmentally;

(*v*) Contract of the usufruct of trees and topes;

(*vi*) Contract for the felling or cutting and purchase of timber or firewood;

(*vii*) Kaucha or grazing lease;

(*viii*) Agreement for felling and conversion of timber;

(*ix*) Agreement for right to collect seigniorage or minor produce brought for sale by hill tribes;

(*x*) Agreement for cultivation under the taungya system in reserved or protected forests;

(*xi*) Agreement for hunting, shooting or fishing in reserved or protected forests.

* * * * * *

D.—EDUCATION DEPARTMENT.

* * * * * *

48. Agreement or security bond required to be executed by the holder of a scholarship or stipend on admission to any Government Training College or class or to any Normal School, or to any Girls' Vernacular or Anglo-Vernacular School in the Bengal Presidency or in the province of Bihar and Orissa.

49. Bond required to be executed by persons selected for State Scholarships, or by their sureties.

* * * * * *

E.—MEDICAL DEPARTMENT.

51. Security bond taken under the authority of the Government from a Military Medical student of the Assistant Surgeon or Sub-Assistant Branch of the Indian Medical Department or from a woman stipendiary of the Government School of Indian Medicine, Madras, and his or her surety, or from the surety of any such student or woman stipendiary.

52. Agreement executed by a private medical practitioner on acceptance of service under the Secretary of State for India in Council as a Surgeon to His Majesty's forces with the temporary rank of Lieutenant in the Indian Medical Service.

* * * * * *

G.—POSTS AND TELEGRAPHS DEPARTMENT.

54. Letter which a person depositing money in a Post Office Savings Bank, as security to the Government or a local authority for the due execution of an office or for the fulfilment of a contract or for any other purpose, is required to address to the Postmaster in charge of the Post Office Savings Bank agreeing to special conditions with respect to the application and withdrawal of the money deposited and the payment of interest accruing due thereon.

55. Receipt given by, or on behalf of, a depositor in a Post Office Savings Bank for a sum of money withdrawn from any such Bank.

56. Receipt endorsed by the payee on a Postal Money Order or given by the payee to the Post Office for a sum paid to him in adjustment of a short or wrong payment of such an Order.

57. Receipt endorsed by the holder of a Post Office Cash Certificate at the time of its discharge.

58. Receipt given by an officer of the Indian Post and Telegraph Department in respect of a sum paid to him by the Government as advance for the purchase of railway or steamer tickets.

H.—RAILWAYS AND INLAND STEAMER COMPANIES.

59. Agreement made with a Railway Company or Administration or an Inland Steamer Company for the conveyance of goods.

60. Agreement or indemnity bond given to a railway authority or an Inland Steamer Company by a passenger permitted to travel without payment of fare, indemnifying such authority or Company from any claim for damages in case of accident or injury.

61. Agreement or indemnity bond given to a Railway authority or an Inland Steamer Company by a consignee (when the Railway receipt or bill of lading is not produced) in respect of the delivery of articles carried at half parcels rates or at goods rates, namely: fresh fish, fruits, vegetables, bazar baskets, bread, meat, ice, and other perishable articles.

62. Agreement made with the Railway Company or Administration which purports to limit the responsibility of the Company or Administration as declared by the Indian Railways Act, 1890 (IX of 1890), section 72, sub-section (1), and is in a form approved by the Governor-General in Council under sub-section (2) of that section.

63. Receipt or bill of lading issued by a Railway Company or Administration or an Inland Steamer Company for the fare for the conveyance of passengers or goods, or both, or animals, or for any charges incidental to the conveyance thereof or given to such Company or Administration or Inland Steamer Company for the refund of an overcharge made in respect of such fare or charges.

64. Receipt given by a Railway Company or Administration or an Inland Steamer Company for money received by it from another Railway Company or Administration or Inland Steamer Company, or from a Tramway Company or other Carrying Company on account of its share of fares or freight for the conveyance in through traffic of passengers or goods or both or of animals.

J.—GOVERNMENT OFFICERS AND CONTRACTORS.

65. Agreement paper passed by a contractor of the Supply and Transport Corps where his security deposit is transferred to a Post Office Savings Bank.

66. Instrument in the nature of a memorandum or agreement furnished to, or made or entered into with a Supply and Transport officer by a contractor.

67. Agreement or declaration by which a tender made to a Supply and Transport officer is accepted as a contract, where the deposit of the contractor as security for his contract is made in Government of India Promissory Notes or in cash.

68. Instrument in the nature of a memorandum, agreement or security bond furnished to or made, or entered into with:—

(*a*) the Ordnance Department, or

(*b*) the Army Clothing Department, or

(*c*) the Military Farms Department, or

(*d*) the Opium Department, or

(*e*) the Forest Department, or

(*f*) the State Railway Department, or

(*g*) the Public Works Department, or any other administrative department empowered to execute public works, or

(*h*) the Revenue Department in the Madras Presidency in respect of minor irrigation works contracts, or

(*i*) the Public Health Department in Bihar and Orissa or in the United Provinces, or

(*j*) the Police Department in Assam in respect of contracts for the supply of rations to Assam Rifles and the Civil Police.

* * * * * *

70. Agreement executed on the United Provinces Public Works Department, Manual Form No. 36 (Agreement by Zemindars allowed to build wells, etc., on Government land) or on the Manual Form No. 37. (Agreement for the erection of buildings, etc., on Government land).

71. Instrument furnished to or made or entered into with any of the Departments mentioned in item 68 by a contractor under which the due performance of any contract is secured by the deposit of money or of Government or other securities; and (except in Burma) an instrument under which materials belonging to a contractor are mortgaged as security for an advance made to him by any such Department.

72. Mortgage deed executed by an officer of Government in Civil or Military employ for securing the repayment of an advance received by him from the Government for the purpose of constructing, purchasing or repairing a dwelling house for his own use.

73. Instrument of re-conveyance of mortgaged property executed by Government in favour of an officer in Civil or Military employ on the repayment of an advance received by him from the Government for the purpose of constructing, purchasing or repairing a dwelling house for his own use.

74. Agreement which has been or may be entered into in compliance with the rules prescribed in Appendix XXII-A of Regulations for the Army in India for regulating the deposits of regimental funds with private banks or firms or such other rules for that purpose as may hereafter be in force.—Duty reduced to the amount payable in respect of a bond for like amount or value, or to Rs. 5, whichever shall be less.

75. Mortgage deed or agreement executed by an officer of the Government for securing the repayment of an advance received by him from the Government for the purpose of purchasing a motor car, a motor boat, a motor cycle, a horse, a cycle, or a typewriter.

76. Agreement executed by an officer of the Government relating to the repayment of an advance received by him from the Government for defraying the cost of passages for himself or his family or both.

77. Receipt given for pension or allowances paid by Government to an heir of a deceased non-commissioned officer or soldier in respect of service in His Majesty's Army or in His Majesty's Indian Army.

78. Authority in writing executed under rule 1, Order XXVIII of the Code of Civil Procedure, 1908 (Act V of 1908), by any officer or soldier actually serving the Government in a military capacity authorising any person to sue or defend in his stead in a Civil Court.

K.—OTHER DOCUMENTS.

* * * * * *

80. Receipt given for payment of interest on Government of India Promissory Notes.

81. Letter of authority or power-of-attorney executed for the sole purpose of authorising one or more of the joint-holders of a Government security to give on behalf of the other or others of them, or any one or more of them, a discharge for interest payable on such security or on any renewed security issued in lieu thereof.

* * * * * *

84. Sanad of Jagir or other instrument conveying land granted to an individual by the Government otherwise than for a pecuniary consideration.

85. Instrument of exchange executed by a private person where land is given by him for public purposes in exchange for other land granted to him by the Government.

86. Transfer by endorsement of a mortgage of rates and taxes authorised by any Act for the time being in force in British India.

* * * * * *

88. Trust deed entered into in compliance with the rules for the time being in force in the Bombay Presidency, the Punjab, Bengal, Bihar and Orissa and Assam, regulating grants-in-aid made by the Government for building purposes to schools and colleges in those provinces.—Duty reduced to the amount payable in respect of a bond for like amount or value, or to Rs. 15, whichever shall be less.

89. Agreement executed for service or for performance of work in any estate not less than ten acres in extent, whether held by one person or by more persons than one as co-owners, and whether in one or more blocks, and situated in British India (excluding Coorg and Assam) or in Mysore, which is being prepared for the production of, or actually produces, tea, coffee, rubber, pepper, cardamom or cinchona, where the advance given under agreement does not exceed fifty rupees.—Duty reduced to one anna.

* * * * * *

91. Kabuliyat executed by a Ghatwal of any of the 52 Sarkar Panchaki and Be Panchaki Ghats, or of the 186 Zamindari Panchaki Ghats, in the district of Bankura in Bengal.—Duty reduced to the amount payable in respect of a conveyance for a consideration equal to the amount or value of the average annual rent reserved.

92. Instrument of transfer of shares registered in a branch register in the United Kingdom under the provisions of section 41 of Indian Companies Act, 1913 (VII of 1913), which has paid the stamp duty leviable thereon in accordance with the law for the time being in force in the United Kingdom.

* * * * * *

98. Attested instrument evidencing an agreement relating to the hypothecation of moveable property where such hypothecation has been made by way of security for the repayment of money advanced or to be advanced by way of loan, or of an existing or future debt.—Duty reduced to the amount chargeable on a bill of exchange under Article No. 13 (*b*) of Schedule I of the Stamp Act, 1899, for the amount secured, if such loan or debt is repayable on demand or more than three months from the date of the instrument; and to half that amount, if such loan or debt is repayable not more than three months from the date of the instrument.

99. Unattested instrument evidencing an agreement relating to the hypothecation of moveable property, where such hypothecation has been made by way of security for the repayment of money advanced or to be advanced by way of loan or of an existing or future debt.

* * * * * *

103 Instrument of transfer of Government Stock registered in the book debt account.

104. Instrument of release referred to in section 48 of the Indian Merchant Shipping Act, 1923 (XXI of 1923).

105. Decision or award of the Registrar of Co-operative Societies for the Central Provinces and the award of arbitrators in any dispute in which a co-operative society in British India is a party.

106. Receipt or bill of lading issued by the Commercial Carrying Company, Ltd., for the fare for the conveyance of passengers or goods or both or receipt given by the said Company for the refund of an over-charge made in respect of such fare.

107. Receipt given for interest paid in British India on securities of the Mysore Darbar.

108. Agreement between an employer and a workman employed by or under him regarding the payment of compensation under the Workmen's Compensation Act, 1923 (VIII of 1923).

* * * * * *

110. Mortgage deed being collateral or auxiliary or additional security or being by way of further assurance.—Duty reduced to Rs. 20 in the Presidency of Bombay, to Rs. 15 in the Presidency of Madras or in the Province of the Punjab and to Rs. 10 in the Presidency of Bengal, the Central Provinces and the Province of Bihar and Orissa provided that the duty paid on the principal or primary security exceeds the amount specified for that presidency or province.

111. Proxy empowering a person to vote at a meeting of creditors.—Duty reduced to the rate chargeable on a proxy empowering a person to vote at any one meeting of members of an incorporated Company.

112. Instrument cancelling a Will.

113. Renewal of any of the Foreshore securities issued by the Trustees of the Port of Bombay under the provisions of section 30 of the Bombay Port Trust Act, 1879 (Bombay Act VI of 1879).

114. Indemnity Bonds executed in pursuance of Royal Air Force Instruction (India), No. 5 of 1931 by a non-entitled person undertaking passenger flights in accordance with clause 1 of paragraph 797-A and clause 2 of paragraph 798 of King's Regulations and Air Council Instructions.

* * * * * *

116. Agreement or memorandum of agreement relating to the hire of a bicycle for a period of less than a week.

117. Instrument executed in the areas mentioned in the schedule hereto attached in respect of which the stamp duty with which it is chargeable under the stamp law for the time being in force in the said areas has been paid in accordance with the said law.

SCHEDULE.

AREAS.

1. Agency territories in Baluchistan.

2. The District of Abu.

3. The cantonments of Mhow, Neemuch, and Nowgong (including the Civil Lines) in the Central India Agency and Baroda.

4. The Indore Residency Bazars.

5. Railway lands within the limits of the Central India and Rajputana Agencies over which the Governor General in Council exercises jurisdiction.

6. The areas in the Hyderabad State in which the Governor General in Council exercises jurisdiction through the Resident at Hyderabad.

7. Berar.

8. The Civil and Military Station of Bangalore.

9. Railway lands in the Mysore State over which the Governor General in Council exercises jurisdiction.

10. Railway lands in the Baroda State and in States in the Political control of the Government of Bombay, over which jurisdiction has been ceded to the British Government and to which the provisions of the Indian Stamp Act, 1899, have been applied.

11. Railway lands in Jammu and Kashmir and in States in the Punjab over which the Governor General in Council exercises jurisdiction.

G. S. HARDY,
Joint Secy. to the Govt. of India.

DEPARTMENT OF COMMERCE.

NOTIFICATIONS.

LIGHTHOUSES.

Simla, the 12th September 1931.

No. 19-P. & L./31.—In pursuance of subsection (1) of section 4 of the Indian Lighthouse Act, 1927 (XVII of 1927), and in substitution for the Committee appointed under the notification of the Government of India in the Department of Commerce No. 18-M. II./29, dated the 11th May 1929, the Governor-General in Council has been pleased to appoint a Central Advisory Committee for lighthouses for a period of two years from the 1st April 1931, consisting of the following gentlemen:—

Chairman—

Secretary to the Government of India, Commerce Department. *Ex-officio.*

Members—

Flag Officer Commanding and Director, Royal Indian Marine. *Ex-officio.*

Mr. P. H. Browne, C.B.E.

Mr. R. R. Haddow.

Mr. F. Birley.

Mr. M. A. Master.

Mr. C. Gopal Menon.

Mr. S. N. Haji.

Mr. Kaikobad Cowasji Dinshaw.

MERCHANT SHIPPING.

The 12th September 1931.

No. 81-M. I. (2)/31.—The following Order in Council, dated the 23rd July 1931, is published for general information:—

"AT THE COURT AT BUCKINGHAM PALACE.

The 23rd day of July, 1931.

Present:

THE KING'S MOST EXCELLENT MAJESTY.

Lord President.
Earl of Athlone.
Mr. Secretary Wedgwood Benn.
Sir Maurice de Bunsen.

WHEREAS by section 4 of the Merchant Shipping Act, 1894 (hereinafter referred to as the principal Act), it is (amongst other things) enacted that His Majesty may by Order in Council declare, with respect to any British possession named in the Order, not being the Channel Islands or the Isle of Man, the description of persons who are to be registrars of British ships in that possession:

AND WHEREAS by section 738 of the principal Act, it is (amongst other things) provided that where His Majesty has power under that Act to make an Order in Council His Majesty may from time to time by Order in Council revoke any Order so made:

AND WHEREAS there is in force an Order in Council namely the Merchant Shipping (Registrars of British ships in British India) Order, 1926, whereby the description of persons who are to be registrars of British ships in British India was declared, and it is expedient that the said Order be revoked:

AND WHEREAS the provisions of Section 1 of the Rules Publication Act, 1893, have been complied with:

NOW THEREFORE, His Majesty, by virtue of the powers vested in Him by the principal Act, and by and with the advice of His Privy Council, is pleased to declare as follows, that is to say:—

(1) At any port of registry in British India, the Principal Officer, Mercantile Marine Department, or where there is no such officer, the Port Officer, shall be the registrar of British ships.

(2) The Merchant Shipping (Registrars of British Ships in British India) Order, 1926, is hereby revoked.

(3) This Order may be cited as the Merchant Shipping (Registrars of British ships in India) Order, 1931.

COLIN SMITH."

A. RAISMAN,
Joint Secy. to the Govt. of India (offg.).

FOREIGN AND POLITICAL DEPARTMENT.

NOTIFICATION.

Simla, the 9th September 1931.

No. 545-G.—The Governor-General in Council is pleased to recognise the appointment of Dr. Alfredo Domenicone as Acting Consul-General for Italy at Calcutta during the absence of Cav. Dr. Gino Scarpa.

E. B. HOWELL,
Foreign Secy. to the Govt. of India.

ARMY DEPARTMENT.

Simla, the 12th September 1931.

Part B.

No. 542.—The following appointments are made:—

AUXILIARY FORCE, INDIA.

* * * *

The Calcutta Scottish.

To be Lt.

Francis John Rasmussen. From 17th July to 1st Aug. 1931.

To be 2nd Lt.

Alexander Hunt. From 17th July to 1st Aug. 1931.

* * * *

INDIAN TERRITORIAL FORCE.

* * * *

12th (Dacca) Coy., University Training Corps.

To be 2nd Lts.

Muhmood Hassan. Dated 15th July 1930

The Hon'ble Nawab Khwaja Habibullah. Dated 22nd July 1931.

G. M. YOUNG,
Secy. to the Govt. of India.

The Calcutta Gazette

THURSDAY, SEPTEMBER 24, 1931.

Part IB

Educational Notices.

Dacca Medical School.

Dacca, the 29th August 1931.

NOTICE.

Examination of Compounders and Dressers at the Dacca Medical School.

It is hereby notified for general information that the next half-yearly examination of compounders will be held on the 3rd November 1931 and subsequent days.

(*a*) No person will be admitted to the examination unless he produces certificates as required by rules 9, 10, 11 and 12 of Government notification No. 1410Medl., dated the 7th July 1913.

(*b*) All male candidates must forward to the Superintendent, Dacca Medical School, an examination fee of Rs. 5 at least one week before the commencement of the examination. A fresh fee must be paid on each occasion that the candidate enters for the examination, but a candidate, who, after payment of the fee, is unable, through illness, to attend the examination, will be allowed, on producing a satisfactory medical certificate, to attend the next examination without payment of fresh fee.

(*c*) Women candidates are examined free of charge.

(*d*) Passed compounders, who have completed a further three months' course of dressing prescribed in rule 13, and students of the Licentiate class of this school, on the completion of their second year's course, will be allowed to appear at an examination in bandaging, sterilization of dressings and instruments, and in minor duties of hospital work. A fee of Rs. 2 shall be charged for this examination.

This examination is also open to persons qualified for admission to the examination prescribed under the rules for the grant of certificates to compounders, on production of a certificate that they have received instruction in a hospital or dispensary recognised by Government in bandaging, preparation of anteseptic lotions and dressings, sterilization of dressings and instruments, and in the duties of a hospital dresser. Such persons shall be required to pay a fee of Rs. 2 for this examination.

C. R. O'Brien, Lt.-Col., I.M.S.,
Supdt., Dacca Medical School.

Bengal Engineering College.

The 20th August 1931.

Under the authority of the Government of Bengal, an examination called the "Bengal Local Bodies Accountants' Examination" will be held at the Bengal Engineering College, Botanic Garden post office, Howrah, on Monday, the 11th January 1932, and the following two days, concurrently with the Divisional Accountants' Examination.

No candidate will be admitted to the Local Bodies Accountants' Examination unless he is over 24 years of age and thus ineligible to appear at the Divisional Accountants' Examination.

For the prospectus, application should be made to the Principal, Bengal Engineering College, post office Botanic Garden, Howrah.

J. Riffkin, *Professor-in-charge.*

Orders by the Executive Council of the University of Dacca, dated the 6th August 1931.

Ramna, Dacca, the 8th August 1931

Preliminary M. A. Examination, 1931.

The undermentioned candidates have passed the Preliminary M A Examination held in July 1931 :—

(In alphabetical order.)

Roll No	Name of Hall.	Names of candidates
	Sanskritic Studies.	
14	Jagannath	.. Rameschandra Basak.
	Sanskrit and Bengali.	
15	Jagannath	.. Haripada Sengupta

Orders by the Executive Council of the University of Dacca, dated the 20th August 1931.

Ramna, Dacca, the 22nd August 1931.

Preliminary M. A. Examination, 1931.

The undermentioned candidates have passed the Preliminary M A Examination held in July 1931

(In alphabetical order,)

Roll No	Name of Hall.	Names of candidates
	Persian.	
19	Salimullah Muslim	.. Abul Farh Muhammad Abdul Huq
21	Ditto	.. Hamidur Rahman
22	Ditto	.. Mamtazuddin Ahmad
23	Ditto	.. Matiur Rahman
	Philosophy.	
24	Salimullah Muslim	.. Abdul Huque
25	Jagannath	.. Amiyakrishna Sinha.
26	Ditto	.. Binaygopal Ray
27	Salimullah Muslim	.. Dewan Mohammed Azraf Chowdhuri
28	Jagannath	.. Dineschandra Majumdar.
29	Dacca	.. Jatindralal De
30	Salimullah Muslim	. Mahammad Ketabuddin
31	Ditto	. Sokender Ali Bhuiya
	History.	
35	Jagannath	.. Ardhendusekhar Bhattacharyya
41	Salimullah Muslim	.. M Eusuf
42	Jagannath	. Makhanlal Basu
44	Salimullah Muslim	.. Najmul Haque Choudhury
46	Jagannath	.. Pramodlal Pal
48	Ditto	.. Subodhkumar Sengupta
49	Ditto	.. Sudhansumohan Chakrabarti

Orders by the Executive Council of the University of Dacca, dated the 26th August 1931.

Ramna, Dacca, the 27th August 1931

Preliminary M. A. Examination, 1931.

The undermentioned candidates have passed the Preliminary M A. Examination held in July 1931 :—

(In alphabetical order)

Roll No	Name of Hall.	Names of candidates.
	Arabic.	
16	Salimullah Muslim	. Muhammad Abdul Quader Khan.
17	Ditto	.. Shah Muhammad Wajed Ali.
	Islamic Studies.	
18	External	.. Mohammad Hossamud din

Orders by the Executive Council of the University of Dacca, dated the 9th September 1931.

Ramna, Dacca, the 11th September 1931

Preliminary M. A. Examination, 1931.

The undermentioned candidates have passed the Preliminary M A. Examination held in July 1931 :

(In alphabetical order)

Roll No	Name of Hall	Names of candidates.
	English.	
2	Salimullah Muslim	.. Abdus Sayeed.
3	Ditto	.. Abu Taiyeb Mazharul Huque
4	External	.. Amulyachandra Mukhopadhyay.
5	Dacca	. Asutosh Bandyopadhyay.
6	Ditto	.. Brajalal Mukhopadhyay
9	External	.. K Suryanarayanamurti
10	Ditto	. Muhammad Abdul Aziz
11	Salimullah Muslim	Muhammad Nurul Islam
12	Dacca	.. Surendranath Sil
13	External	.. V Suryanarayanamurti
	Economics.	
55	Salimullah Muslim	.. A K M Idris
56	External	.. Anilchandra Ray.
57	Jagannath	. Bhupatiranjan Nath
58	Ditto	.. Hirendrakumar Sen
60	Dacca	.. Nirojprasanna Gupta
64	Ditto	.. Sarojkumar Som
65	Jagannath	.. Sudarsanchandra Saha
66	Ditto	.. Sudhirchandra Chattopadhyay
67	Dacca	.. Tarakchandra Basak

Orders by the Executive Council of the University of Dacca, dated the 6th August 1931.

Ramna, Dacca, the 8th August 1931

Preliminary M. Sc. Examination, 1931.

The undermentioned candidates have passed the Preliminary M Sc Examination held in July 1931 :—

(In alphabetical order)

Roll No	Name of Hall.	Names of candidates
	Chemistry.	
6	Jagannath	.. Balaram Bhatta
7	Dacca	.. Bhupalchandra Mukhopadhyay
8	Ditto	.. Bikramjit Baksi
9	Ditto	.. Gobindalal Chakrabarti
10	Ditto	.. Kalipada Gangopadhyay.
11	Ditto	.. Krishnabandhu Deb
13	Ditto	. V Paul

Orders by the Executive Council of the University of Dacca, dated the 20th August 1931.

Ramna, Dacca, the 22nd August 1931.

Preliminary M. Sc. Examination, 1931.

The undermentioned candidates have passed the Preliminary M. Sc. Examination held in July 1931 :—

(In alphabetical order.)

Roll No.	Name of Hall.	Names of candidates.
	Physics.	
1	Dacca	.. Kabindranath Das.
2	Ditto	.. Nisikanta Dasgupta.
3	Ditto	.. Phanibhushan Chakrabarti.
	Mathematics.	
16	Dacca	.. Ranajit Acharyyachaudhuri.

Orders by the Executive Council of the University of Dacca, dated the 20th August 1931.

Ramna, Dacca, the 22nd August 1931.

Final M. A. Examination, 1931.

The undermentioned candidates have been admitted to the Degree of Master of Arts on the results of the Examination held in July 1931 :—

(In alphabetical order.)

Roll No.	Name of Hall.	Names of candidates.
	Persian.	
	FIRST CLASS.	
26	Salimullah Muslim	.. Md. Abdur Aziz.
	SECOND CLASS.	
27	Salimullah Muslim	.. Syed Abdul Mannan.
	Philosophy.	
	SECOND CLASS.	
30	Dacca	.. (Miss) Basanti Dasgupta.
31	Ditto	.. Birendranath Majumdar.
33	Jagannath	.. Nikunjabihari Chaudhuri.
	THIRD CLASS.	
29	Dacca	.. Bakul Acharyyachaudhuri.
32	Jagannath	.. Jitendrachandra Ray.
	Mathematics.	
	SECOND CLASS.	
69	Jagannath	.. Sarojbihari Dasgupta.

Orders by the Executive Council of the University of Dacca, dated the 26th August 1931.

Ramna, Dacca, the 27th August 1931.

Final M. A. Examination, 1931.

The undermentioned candidates have been admitted to the Degree of Master of Arts on the results of the Examination held in July 1931 :—

(In alphabetical order.)

Roll No.	Name of Hall.	Names of candidates.
	Sanskritic studies.	
	FIRST CLASS.	
10	Jagannath	.. Upendrachandra Desarkar.
	SECOND CLASS.	
7	Dacca	.. Atulchandra Bhattacharyya.
8	Ditto	.. (Miss) Bibha Sen.
	Sanskrit and Bengali.	
	SECOND CLASS.	
11	Jagannath	.. Gopalchandra De.
12	Ditto	.. Nibaranchandra Laskar.
	Arabic.	
	FIRST CLASS.	
21	Salimullah Muslim	.. Rajab Ali Mirza.
	SECOND CLASS.	
19	Salimullah Muslim	.. Muhammad Abdul Majid.
20	Ditto	.. Muhammad Abdus Sobhan.
	THIRD CLASS.	
17	Salimullah Muslim	.. Matiur Rahman.
18	Ditto	.. Muhammad Abdul Ghafur.
	Islamic studies.	
	FIRST CLASS.	
22	Salimullah Muslim	.. Abu Tahir Muhammad Abdul Hai.
	SECOND CLASS.	
24	Salimullah Muslim	.. Muhammad Siddiqur Rahman.
	THIRD CLASS.	
23	Salimullah Muslim	.. Muhammad Abdus Sattar.
	History (Group A).	
	FIRST CLASS.	
37	Jagannath	.. Haréschandra Bhattacharyya.

Roll No.	Name of Hall.	Names of candidates.
	SECOND CLASS.	
35	Salimullah Muslim	.. Azizus Samad Choudhury.
	THIRD CLASS.	
36	Jagannath	.. Bijaykrishna Bhattacharyya.
38	Dacca	.. Manindrabijay Bandyopadhyay.
39	Jagannath	.. Sinam Krishnamohan Singh.
	History (Group B).	
	SECOND CLASS.	
40	Salimullah Muslim	.. Abul Fazl Mahammad Sayeed.
	THIRD CLASS.	
43	Salimullah Muslim	.. Muhammad Abdul Hai.

Orders by the Executive Council of the University of Dacca, dated the 9th September 1931.

Ramna, Dacca, the 11th September 1931.

Final M. A. Examination, 1931.

The undermentioned candidates have been admitted to the Degree of Master of Arts on the results of the Examination held in July 1931 :—

(In alphabetical order.)

Roll No.	Name of Hall.	Names of candidates.
	English (Group A).	
	FIRST CLASS.	
3	Jagannath	.. Buddhadeb Basu.
	SECOND CLASS.	
2	Dacca	.. Bhujangabhushan Basu.
4	Ditto	.. (Miss) Charupama Basu.
	THIRD CLASS.	
5	Dacca	.. Dhirendranath Gupta.
	Economics.	
	FIRST CLASS.	
52	Jagannath	.. Khagendranath Bhattacharyya.
56	Ditto	.. Parimal Ray.
	SECOND CLASS.	
48	Jagannath	.. Bijayprasanna Guha.
50	Ditto	.. Hemendralal Ray.
51	Dacca	.. Jagadischandra Ghosh.
55	Salimullah Muslim	.. Muhammad Abdus Salaam Khan.
59	Dacca	.. Satyaranjan Banerjee.
60	Ditto	.. Satyendranath Basu.
62	Jagannath	.. Sudhindranath Sengupta.
65	Dacca	.. Sukomalchandra Nandi.
68	Salimullah Muslim	.. Syed Bazlur Rahman.
	THIRD CLASS.	
47	Salimullah Muslim	.. Abdul Mobarek.
57	Dacca	.. Prabodhchandra Mukherjee.
58	Jagannath	.. Sachindrachandra Das.
61	Ditto	.. Snehansubhushan Baksi.
63	Dacca	.. Sudhirchandra Majumdar.
66	Jagannath	.. Surendrachandra Das.
67	External	.. Susilkumar Kusari.

Orders by the Executive Council of the University of Dacca, dated the 20th August 1931.

Ramna, Dacca, the 22nd August 1931.

Final M. Sc. Examination, 1931.

The undermentioned candidates have been admitted to the Degree of Master of Science on the results of the Examination held in July 1931 :—

(In alphabetical order.)

Roll No.	Name of Hall.	Names of candidates.
	Physics.	
	FIRST CLASS.	
1	Dacca	.. Asutosh Mukherjee.
2	Ditto	.. Bhupendrakumar Datta.
7	Ditto	.. Mallur Sreenivasa Swamy Ramanna.
*12	Jagannath	.. *Santilal Bandyopadhyay.
	SECOND CLASS.	
3	Dacca	.. Bidhubhushan Sil.
4	Salimullah Muslim	.. Eqbalur Rahman.
5	Jagannath	.. Jogendrachandra Bhattacharyya.
8	Dacca	.. Manoranjan Raychaudhuri.
*9	Ditto	.. *Nareschandra Chakrabarti.
11	Jagannath	.. Praphullakumar Das.
13	Dacca	.. Subodhchandra Guha.
	THIRD CLASS.	
6	Salimullah Muslim	.. Kafiluddin Ahmad.
10	Dacca	.. Nripendrachandra Bandyopadhyay.
	Mathematics.	
	FIRST CLASS.	
30	Dacca	.. Rajendranarayan Chakrabarti.
	SECOND CLASS.	
29	Dacca	.. Jatindralal De.

*Presented a Dissertation.

Orders by the Executive Council of the University of Dacca, dated the 26th August 1931.

Ramna, Dacca, the 27th August 1931.

Final M. Sc. Examination, 1931.

The undermentioned candidates have been admitted to the Degree of Master of Science on the results of the Examination held in July 1931 :—

(In alphabetical order.)

Roll No.	Name of Hall.	Names of candidates.
	Chemistry.	
	FIRST CLASS.	
*16	Dacca	*Bireschandra Chakrabarti.
*20	Ditto	*Ranendrachandra Dasgupta.
*21	Ditto	*Saileschandra Ganguli.
*23	Ditto	*Sarasipada Basu.
	SECOND CLASS.	
*15	Dacca	*Bimalakanta Chakrabarti.
17	Ditto	Dibyendusundar Mukherjee.
*19	Ditto	*Pradoshranjan Chattopadhyay.
*22	Ditto	*Samarendranath Mitra.
*24	Ditto	*Sarojkanta Sarkar.
*26	Ditto	*Sunilkumar Das.
*27	Ditto	*Sureschandra Chakrabarti.

*Presented a Dissertation.

Orders by the Executive Council of the University of Dacca, dated the 9th September 1931.

Ramna, Dacca, the 10th September 1931.

Preliminary B. L. Examination, 1931.

The undermentioned candidates have passed the Preliminary B. L. Examination held in July 1931 :—

(In alphabetical order.)

Roll No.	Name of Hall.	Names of candidates.
	FIRST CLASS.	
1	Dacca	Abanibhushan Rudra.
11	Jagannath	Amulyachandra Gangopadhyay.
21	Dacca	Brajendrakisor Dattaray.
28	Salimullah Muslim	Hamiduddin Ahamed.
42	Ditto	Mohamad Hossain Ali.
53	Dacca	Rajeswar Dhar.
54	Jagannath	Ramananda Basak.
58	Dacca	Ranendranarayan Chaudhuri.
67	Ditto	Susilchandra Sengupta.
	SECOND CLASS.	
2	Dacca	Abanimohan Raychaudhuri.
3	Salimullah Muslim	Abdul Aziz Sirder.
6	Ditto	Abdul Karim.
14	Ditto	Azizul Islam.
15	Jagannath	Babuchand Sinha.
25	Ditto	Dhirendrakumar Dechaudhuri.
26	Ditto	Dhirendrakumar Ray.
27	Ditto	Girindrachandra Pal.
29	Ditto	Hrishikes Saha.
31	Ditto	Jitendranath Raychaudhuri.
32	Dacca	Jogendranath Mukherjee.
33	Ditto	Kaliranjan Bhattacharyya.
34	Jagannath	Kshitindrakumar Mukhopadhyay.
36	Salimullah Muslim	Md. Abdur Razzaque.
37	Ditto	Md. Ketab Ali.
38	Ditto	Md. Moslem Uddin.
40	Ditto	Md. Muazzam Hossain Khan.
41	Ditto	Mir Mobarak Ali.
43	Ditto	Muhammad Abdul Jalil.
46	Ditto	Mujibur Rahman.
47	Ditto	Mujibur Rahman Khan.
49	Dacca	Niharranjan Ray.
52	Jagannath	Pratulchandra Das.
55	Ditto	Ramanimohan Palchaudhuri.
57	Ditto	Rameswar Samaddar.
59	Salimullah Muslim	Reazuddin Bhunya.
62	Dacca	Srikanthaprasanna Ghosh.
63	Jagannath	Sudhansumohan Basu.
68	Ditto	Susilkumar Ray.
69	Salimullah Muslim	Syed Md. Sulaiman.
70	Jagannath	Upendrachandra Das.
71	Salimullah Muslim	Zainal Abedin.

Preliminary B. L. Supplementary Examination, July 1931.

The undermentioned candidates have passed the Preliminary B. L. Examination held in July 1931 on the results of the Supplementary Examination at that examination :—

(In alphabetical order.)

Roll No.	Name of Hall.	Names of candidates.
	WITHOUT CLASS.	
72	Salimullah Muslim	Abdul Ali.
73	Jagannath	Bhupendramohan Chaudhuri.
74	Salimullah Muslim	Md. Abul Hossain.
75	Jagannath	Nirmalansukumar Dasgupta.
76	Ditto	Sudhirchandra Gupta.
77	Dacca	Susilprasad Lahiri-chaudhuri.

The following candidates have failed in the subject or subjects noted against their names at the Preliminary B. L. Examination held in July 1931, and are entitled to appear in the subject or subjects at a Supplementary Examination under conditions laid down in the Ordinances and Regulations :—

Roll No.	Name of Hall.	Names of candidates.	Subjects.
13	Dacca	Asutosh Chatterjee	Constitutional Law and History of English Law.
17	Ditto	Birendrachandra Banerjee	Constitutional Law and History of English Law.
20	Jagannath	Birendrakumar Chakrabarti	Hindu Law.
22	Ditto	Brajendrakumar De	(1) Jurisprudence. (2) Constitutional Law and History of English Law.
24	Dacca	Debendranath Bhaumik	(1) Hindu Law. (2) Constitutional Law and History of English Law.

Roll No.	Name of Hall.	Names of candidates.	Subjects.
30	Dacca ..	.. Jitendranath Pal	.. Constitutional Law and History of English Law.
39	Salimullah Muslim ..	.. Md. Mozaffar Hossain	.. Constitutional Law and History of English Law.
44	Ditto ..	.. Muhammad Ismail	.. Constitutional Law and History of English Law.
51	Dacca ..	.. Pradyotkumar Basak	.. (1) Roman Law. (2) Constitutional Law and History of English Law.
64	Jagannath ..	.. Sukumar Dattaray	.. (1) Hindu Law. (2) Jurisprudence.
65	Dacca ..	.. Surathchandra Majumdar	.. Hindu Law.

Orders by the Executive Council of the University of Dacca, dated the 9th September 1931.

Ramna, Dacca, the 10th September 1931.

Final B. L. Examination, 1931.

(Under the Revised Ordinances.)

The undermentioned candidates have been admitted to the Degree of Bachelor of Law on the results of the examination held in July 1931 :—

(In alphabetical order.)

Roll No.	Name of Hall.	Names of candidates.
	FIRST CLASS.	
88	Dacca ..	Chittaranjan Maitra.
98	Jagannath ..	Kalipada Chakrabarti.
129	Dacca ..	Phatikchandra Raychaudhuri.
150	Jagannath ..	Sudhirchandra Gupta.
	SECOND CLASS.	
79	Salimullah Muslim ..	A. H. Aftabuddin Khan.
83	Jagannath ..	Anathbandhu Aditya.
84	Ditto ..	Bhupendrachandra Hajra.
85	Ditto ..	Binaybhushan Datta.
86	Dacca ..	Brindabanchandra Sinha.
90	Salimullah Muslim ..	Fakhrul Islam.
92	Dacca ..	Gopinath Kunda.
93	Ditto ..	Harendrachandra Rudra.
95	Ditto ..	Jogeschandra Sen.
96	Jagannath ..	Jyotirindrakisor Chakrabarti.
97	Ditto ..	Kalikanta Mandal.
101	Ditto ..	Karunachandra Majumdar.

Roll No.	Name of Hall.	Names of candidates.
102	Dacca ..	Kiranchandra Das.
103	Jagannath ..	Krishnachandra Das.
105	Salimullah Muslim ..	Mamtaz-ud-Din Ahmed.
106	Dacca ..	Manindrachandra Basu.
107	Jagannath ..	Manindramohan Ray.
111	Salimullah Muslim ..	Md. Fazlur Rahman.
113	Ditto ..	Md. Shamsul Huda.
115	Jagannath ..	Mohinilal Bhaumik.
117	Salimullah Muslim ..	Motaher Ali.
122	Dacca ..	Nalinimohan Bhaumik.
123	Jagannath ..	Nalinikumar Mitra.
124	Ditto ..	Narendrachandra De.
126	Ditto ..	Niradchandra Mukhopadhyay.
128	Dacca ..	Phanindrachandra Majumdar.
131	Ditto ..	Pramadakanta Ray.
133	Jagannath ..	Priyanath Deb.
137	Ditto ..	Ramanikanta Bhattacharyya.
138	Dacca ..	Ramanimohan Basu.
139	Ditto ..	Rameschandra Das.
140	Salimullah Muslim ..	Ramizuddin Ahmed.
141	Jagannath ..	Satischandra Basu.
143	Dacca ..	Satyabrata Ray.
145	Jagannath ..	Subodhchandra Mukhuti.
146	Dacca ..	Subodhchandra Sengupta.

Final B. L. Supplementary Examination, 1931.

(Under the Revised Ordinances.)

The undermentioned candidates have passed the Final B. L. Examination held in July 1931 on the results of the Supplementary Examination at that examination :—

(In alphabetical order.)

Roll. No.	Name of Hall.	Names of candidates.
	WITHOUT CLASS.	
155	Jagannath ..	Kshitischandra Gupta.
156	Ditto ..	Nakshatrakumar Bhaumik.
157	Ditto ..	Nanakdas Bal.
158	Dacca ..	Nripendrachandra Ray chaudhuri.
159	Jagannath ..	Pareskumar Bhattacharyya.
160	Dacca ..	Samarendranath Ray.

The following candidates have failed in the subject or subjects noted against their names at the Final B. L. Examination held in July 1931, and are entitled to appear in the subject or subjects at a Supplementary Examination under conditions laid down in the Ordinances and Regulations :—

Roll No.	Name of Hall.	Names of candidates.	Subjects.
82	Salimullah Muslim ..	.. Abu Ahmad	.. Law of Contracts and Torts.
89	Dacca ..	.. Dhurjatiprasanna Mukherjee	.. Law of Contracts and Torts.
100	Jagannath ..	.. Kamakhyapada Chanda	.. (1) Law of Contracts and Torts. (2) Land Laws of Bengal.
112	Salimullah Muslim ..	.. Md. Jahural Hoque	.. Law of Contracts and Torts.
119	Ditto ..	.. Muhammed Amiruddin	.. (1) Law of Contracts and Torts. (2) Law of Persons and Law of Testamentary and Intestate Succession.
121	Dacca ..	.. Nabinchandra Das	.. Law of Contracts and Torts.
127	Ditto ..	.. Pandoji Dhage	.. (1) Law of Real Property, Equity and Trusts. (2) Law of Transfer and Succession.
135	Ditto ..	.. Rabindrakumar Basak	.. Law of Real Property, Transfer of Property and Trusts.
147	Ditto ..	.. Sudhansukumar Dharchaudhuri	.. Law of Contracts and Torts.
149	Ditto ..	.. Sudhindranath Majumdar	.. (1) Law of Contracts and Torts. (2) Law of Evidence and Civil Procedure.
154	Salimullah Muslim ..	.. Wajed Ali Khan	.. Law of Evidence and Civil Procedure.

Final B. L. (Part II) Examination, 1931.

(Under the Old Ordinances.)

The undermentioned candidate has been admitted to the Degree of Bachelor of Law on the results of the examination held in July 1931 :—

Roll No.	Name of Hall.	Name of candidate.
	SECOND CLASS.	
162	Salimullah Muslim	Abdul Kaddus Choudhury.

Final B. L. (Part II) Supplementary Examination, 1931.

The undermentioned candidate has passed the Final B. L. Examination held in July 1931 on the results of the Supplementary Examination at that examination :—

Roll No.	Name of Hall.	Name of candidate.
	WITHOUT CLASS.	
166	Jagannath	.. Ratindranarayan Mitra.

N. AHMAD, *Registrar.*

Calcutta University.

NOTICE.

Senate House, the 14th September 1931.

The next B. L. Examinations will be held according to the following programme.

All fees and applications for admission to the examinations must reach the office of the undersigned on or before the 2nd December 1931 :—

Programme.

Place of Examination Darbhanga Buildings, Top Floor, and Senate House.

Time—10 a.m.—1 p.m. 2 p.m.—5 p.m.

1932.	Preliminary.	Intermediate.
Monday, 4th January.	Jurisprudence	Mahomedan Law, etc.
Tuesday, 5th January.	Roman Law ..	Law of Transfer inter vivos.
		Final.
Wednesday, 6th January.	Hindu Law ..	Law of Land Tenures, etc.
Thursday, 7th January.	Constitutional Law.	Equity including the Law of Trusts.
	Intermediate.	
Friday, 8th January.	English Law of Real Property, etc.	Law of Evidence and Civil Procedure.
Saturday, 9th January.	Law of Contracts and Torts.	Law of Crimes and Criminal Procedure.

N. SEN,

Controller of Examinations.

Board of Intermediate and Secondary Education, Dacca.

NOTIFICATION.

Ramna, the 7th September 1931.

Jack Muhammadan Settlement Scholarship.

No. 4499.—Subject to the usual conditions of good conduct and satisfactory progress, the Junior Jack Muhammadan Settlement Scholarship attached to the Dacca Islamic Intermediate College of the value of Rs. 90 per annum is awarded to the following student :—

Chandpur Nuria Madrasa.

Mir Muhammad Abdur Rouf.

2. The scholarship is tenable at the Dacca Islamic Intermediate College for two years with effect from 1st June 1931. The scholar must reside in a hostel attached to the college.

A. RAHMAN, *Secretary.*

Education Department, Bengal.

NOTIFICATION.

Calcutta, the 8th September 1931.

It is notified for general information that sixty-three third grade junior scholarships of Rs. 10 a month each are allotted to the following districts in the proportion noted against each. The scholarships are awardable on the result of the Matriculation Examination to be held in March 1932 :—

Calcutta	...	13
24-Parganas	...	3
Jessore	...	2
Khulna	...	2
Murshidabad	...	2
Nadia	...	2
Bankura	...	1
Birbhum	...	1
Burdwan	...	2
Hooghly	...	3
Howrah	...	2
Midnapore	...	2
Bakarganj	...	2
Dacca	...	3
Faridpur	...	2
Mymensingh	...	3
Bogra	...	1
Darjeeling	...	1
Jalpaiguri	...	1
Dinajpur	...	1
Malda	...	1
Pabna	...	2
Rajshahi	...	1
Rangpur	...	1
Chittagong Hill Tracts	..	1
Chittagong	..	2
Noakhali	...	1
Tippera	...	3

One scholarship will be awarded to the most successful aboriginal student in the districts of Birbhum, Bankura and Midnapore who passes the examination but does not obtain any other scholarship. If no qualified aboriginal student is available the scholarship will be allotted to the district of Howrah.

The remaining one scholarship is made open to competition by the students of all high English schools in the district of Rangpur.

R. WOLFENDEN,

Asst. Director of Public Instrn., Bengal.

Burdwan Division.

The 15th September 1931.

The following teachers are declared to have passed the Examination in the Art of Teaching held in the Burdwan Division in September 1931 :—

(Arranged in order of merit.)

1	Ram Narayan Majumdar	.. Head Master, Ramnagar M. E. School (Burdwan).
2	Sambhunath Chatterjee	.. 2nd Master, Billagram M. E. (Burdwan).
3	Ram Krishna Chatterjee	.. Head Master, Telinipara Free Primary School (Hooghly).
4	Chandi Charan Banerjee	.. Head Master, Champdani Old Free Primary School (Hooghly).
5	Kshetra Nath Roy	.. 3rd Pandit, Ramnagar M. E. (Burdwan)
6	Radhashyam Ghosh	.. 2nd Master, Ankhona M. E. (Burdwan).
7	Bhupati Bhusan Majumdar	.. Head Pandit, Sahapur M. V. (Birbhum).
8	Herambanath Chakravarti	.. Assistant Head Master, S. M. M. Bidyalaya (Howrah).
9	Satyaranjan Misra	.. 2nd Pandit, Baharan M. E. (Burdwan).
10	Santoshranjan Kanjilal	.. Head Pandit, Champdani Old Free Primary School (Hooghly).
11	Jyotiram Ghosh	.. Additional Teacher, Chanduli M. E. (Burdwan).
	Satkari Chatterjee	.. 3rd Pandit, Telinipara Free Primary (Hooghly).
13	Kangalhari Chatterjee	.. Head Master, Karui M. E. (Burdwan).
14	Kishori Mohan Ganguli	.. 3rd Pandit, Barabaloon M. E. (Burdwan).
15	Shibakali Nath	.. 2nd Pandit, Chanduli M. E. (Burdwan).

K. C. ROY,
Inspector of Schools.

NOTICE.

Calcutta, the 12th September 1931.

The following programme for the ensuing Divisional Accountants' Examination to be held at the Bengal Engineering College, Sibpur, in January 1932, is published for general information : —

Monday, 11th January 1932—

11 a.m.—Writing and Dictation.
12 to 4 p.m.—Book-keeping.

Tuesday, 12th January 1932—

11 a.m. to 12 noon—Essay writing.
1 p.m. to 5 p.m.—Arithmetic.

Wednesday, 13th January 1932—

11 a.m. to 1 p.m.—Geometry.
2 p.m. to 4 p.m.—Mensuration.

Applications from the intending candidates will be received by the undersigned up to 12 noon of the 15th November 1931. They should be accompanied by the necessary certificates and fees as prescribed in the rules.

A. C. DAS,
for *Deputy Accountant-General, Bengal.*

Examination of Compounders at the Campbell Medical School, Calcutta.

Calcutta, the 19th September 1931.

In accordance with the Government of Bengal notification No. 1410Medl., dated the 7th July 1913, notice is hereby given that the next half-yearly examination of compounders will begin at 11 a.m. on Thursday and Friday, the 12th and 13th November 1931.

Male candidates must forward to the Superintendent of the Campbell Medical School between 27th October and 5th November 1931 an examination fee of Rs. 5. Female candidates will be examined free of charge.

No certificate or fee will be received on Sundays or public holidays.

Should any candidate fail to pass the examination he will forfeit his fee.

NOTE.—The attention of candidates and of the persons granting them certificates is drawn to rules 9, 10, 11 and 14 (3) and to the certificate forms C, D, E and F in the schedule of the Government of Bengal's aforesaid notification.

S. N. MUKERJI, F.R.C.S., MAJOR, I.M.S.,
Supdt., Campbell Medical School & Hospital.

Statement of candidates who have passed the Examination of Sanskrit Titles held in February 1931 in accordance with the Government of Bengal, General Department resolution, dated the 30th January 1878, together with Titles and Rewards conferred on them.

Calcutta, the 18th August 1931.

(Approved by the Calcutta Sanskrit Association.)

(In order of merit.)

No. and name of candidate, title conferred and reward.	Name of teacher and reward.	Place of *tol*.
Sukla Yayu Veda.		
SECOND CLASS.		
1 Keshab Chandra Deb Sarma, Vedatirtha ..	Pandit Chandra Sekhar Jha Vedatirtha ..	Manikulasram, Gauhati, Kamrup.
Rik Veda.		
SECOND CLASS.		
1 Ram Prasad Sarma, Vedatirtha	Private	Gannipur, Muzaffarpur.
2 Murari Mohan Sen, B.A., Vedatirtha XV(*p*) ..	Pandit Naresh Chandra Kavyatirtha, B.A.	2, Narendra Sen Square, Calcutta.
Sama Veda.		
SECOND CLASS.		
1 Ramabatar Trivedi, Vedatirtha	Pandit Raghubir Trivedi, **Rs. 200** ..	22-A, Machuabazar Street, Calcutta.
Sadharan Darsan.		
SECOND CLASS.		
1 Purna Chandra Bhattacharyya, Darsantirtha ..	Mahamahopadhyaya Chandidas Nyayatarkatirtha.	Nabadwip, Nadia.
2 Dinamay Adhikari, Darsantirtha	Pandit Ramesh Chandra Tarkatirtha ..	Maharani H. K. Sanskrit College, Rajshahi.
Nyaya (ক) অনুমান খণ্ড।		
SECOND CLASS.		
1 Narendra Kumar Goswami, Tarkatirtha III(*q*)(*q*) (*s*).	Pandit Kali Krishna Tarkatirtha (A) ..	Gauripur, Mymensingh.
2 Surendra Mohan Chakravarti, Tarkatirtha ..	Mahamahopadhyaya Kamakhyanath Tarkabagisa.	Nabadwip, Nadia.
Nyaya (খ) শব্দ খণ্ড।		
SECOND CLASS.		
1 Hare Krishna Kavyatirtha, Tarkatirtha ..	Mahamahopadhyaya Kamakhyanath Tarkabagisa.	Nabadwip, Nadia.
2 Nikunja Bihari Bhattacharyya, Tarkatirtha ..	Pandit Manmatha Nath Tarkatirtha, **Rs. 200.**	Bhatpara, 24-Parganas.
Prachin Nyaya (গ) ।		
SECOND CLASS.		
1 Vidyendra Sastri, Nyayatirtha	Pandit Surendranath Saptatirtha ..	Gurukul Kangri, Saharanpur.
2 Sambhunath K. Vy. Smrititirtha Nyayatirtha ..	Private.	
Jain (Setambar) Nyaya.		
FIRST CLASS.		
1 Kailash Chandra Jain, Nyayatirtha ..	Mahamahopadhyaya Ambadas Shastri ..	Sadbad Jain Mahavidyalaya, Benares.
SECOND CLASS.		
2 Khusaldas Jain, Nyayatirtha	Pandit Birbhadra Vyakarantirtha ..	Jain Training College, Jaipur.
3 Ram Kumar Jain, Nyayatirtha	Ditto	Ditto.
4 Dalsuk, Nyayatirtha	Ditto	Ditto.
5 Fatteh Chandra, Nyayatirtha	Pandit Ramgopalacharyya	Sibpuri, Gowalior.
6 Santi Lal Jain, Nyayatirtha	Pandit Birbhadra Vyakarantirtha ..	Jain Training College, Benares.
7 Iswar Lal Jain, Nyayatirtha	Ditto	Ditto.
8 Dadlal Vaid, Nyayatirtha	Ditto	Ditto.
9 Lal Chandra Jain, Nyayatirtha	Pandit Ramanath Nyayatirtha ..	Jain Pathsala, Beawar.
10 Harsa Chandra, Nyayatirtha	Pandit Birbhadra Vyakarantirtha ..	Jain Training College, Jaipur.
11 Prem Chandra Lorha, Nyayatirtha	Ditto	Ditto.
Kasturi Lal Jain, Nyayatirtha	Ditto	Ditto.
12 Nath Mallo Jain, Nyayatirtha	Pandit Ramanath Nyayatirtha ..	Jain Pathsala, Beawar.
13 Giridharlal, Nyayatirtha	Pandit Birbhadra Vyakarantirtha ..	Jain Training College, Jaipur.
14 Hari Prasad Santiraj Jain, Nyayatirtha ..	Pandit Ananta Shastri	Lanka, Benares City.
Rangsaraj Jain, Nyayatirtha	Pandit Birbhadra Vyakarantirtha ..	Jain Training College, Jaipur.

XV Government reward of Rs. 20.
III Government reward of Rs. 50.
(A) Burdwan prize of Rs. 45.

(*p*) Rajarshi Gopal Chandra Acharyya Chowdhuri Silver Medal.
(*q*) Rajarshi Gopal Chandra Acharyya Chowdhuri Silver Medal
(*s*) Raja Haranath Ray stipend of Rs. 5 a month.
(*s*) Birajmohini Devi Silver Medal.

No. and name of candidate, title conferred and reward	Name of teacher and reward.	Place of *tol*.
Jain (Digambar) Nyaya.		
SECOND CLASS.		
1 Dharmadas Jain, Nyayatirtha	Pandit Ananta Sastri ..	Sadbad Mahavidyalaya, Benares.
Sekhar Chandra, Nyayatirtha	Ditto	Ditto.
2 Nakhiraj Jain, Nyayatirtha	Ditto	Ditto.
3 Nathuram Jain Dangri, Nyayatirtha ..	Pandit Jagamohan Lal Sastri ..	Santiniketan, Katri, Jubbalpur.
4 Nathu Lal Jain, Nyayatirtha	Pandit Jibandhar Nyayatirtha ..	Hukmichand Digambar Jain Mahavidyalaya, Indore.
5 Gobindaraj Jain, Nyayatirtha	Ditto	Ditto.
6 Nirmal Kumar Jain, Nyayatirtha	Pandit Daya Chandra Nyayatirtha ..	Jain Sanskrit Pathsala, Sangar, C. P.
7 Indrajit Jain, Nyayatirtha	Pandit Jibandhar Nyayatirtha ..	Hukumchand Digambar Jain Mahavidyalaya, Indore.
Sankhya.		
FIRST CLASS.		
1 Srinath Bhattacharyya, Sankhyatirtha I(*f*) ..	Pandit Manmathanath Tarkatirtha ..	Bhatpara, 24-Parganas.
2 Herambanath Bhattacharyya, Sankhyatirtha II(*f*)	Pandit Kedarnath Sankhyatirtha (C) ..	Gauripur, Mymensingh.
SECOND CLASS.		
3 Hrishikesh Goswami, Sankhyatirtha VII(*a*) ..	Pandit Manmatha Nath Tarkatirtha ..	Bhatpara, 24-Parganas.
4 Apurba Chandra Chakravarti, Sankhyatirtha VIII(*c*).	Pandit Ramesh Chandra Vedantatirtha (B)	Bijay Chatuspathi, Burdwan.
5 Hemkanta Dev Bhattacharyya, Sankhyatirtha ..	Pandit Manmathanath Tarkatirtha ..	Bhatpara, 24-Parganas.
6 Sudama Pathak Kavyatirtha, Sankhyatirtha ..	Pandit Jogendranath Tarka Vedantatirtha	Sanskrit College, Calcutta.
7 Bhudev Mukhopadhyaya, Sankhyatirtha ..	Professor Satkari Mukherjee, M.A. ..	Calcutta University.
8 Hari Pada Kar Sarma, Sankhyatirtha ..	Pandit Madhabdas Sankhyatirtha ..	10, Atabagan Street, Calcutta.
9 Ashutosh Bhattacharyya, Sankhyatirtha ..	Pandit Annada Kumar Sankhyatirtha ..	Narton, Sylhet.
10 Jatindra Chandra Kavyatirtha, Sankhyatirtha ..	Pandit Atul Krishna Panchatirtha ..	Chaitanya Chatuspathi, Nabadwip, Nadia.
11 Rajendralal Ghosh Kavyatirtha, M.A., Sankhyatirtha.	Pandit Madhusudan K. Sankhyatirtha ..	131-1, Muktaram Babu Street, Calcutta.
12 Rakesh Chandra Bhattacharyya, Sankhyatirtha	Pandit Annada Kumar Sankhyatirtha ..	Narton, Sylhet.
13 Satis Chandra Bhattacharyya, Sankhyatirtha ..	Pandit Heramba Nath Tarkatirtha ..	Sanskrit College, Dacca.
14 Damodar Prasad Kabiraj, Sankhyatirtha ..	Pandit Manmatha Nath Tarkatirtha ..	1, Madan Mitra Lane, Calcutta.
Vedanta.		
SECOND CLASS.		
1 Narayan Datta, Vedantatirtha	Private	Indore.
2 Naresh Chandra Bhattacharyya, Vedantatirtha	Pandit Kumud Chandra Vyakarantirtha	2, Narendra Sen Square, Calcutta.
3 Narmada Prasad Sukla, Vedantatirtha ..	Pandit Hari Shankar Sastri ..	Rishikul Brahmacharyya Asram, Hosangabad, C. P.
4 Bhabadeb Bhagabati, Vedantatirtha ..	Pandit Ramesh Chandra Tarkatirtha	Maharani H. K. Sanskrit College, Rajshahi.
Mimansa.		
SECOND CLASS.		
1 Binayak Sarma, Mimansatirtha	Mahamahopadhyaya Nityananda Pantha Parbatiya.	Benares City.
2 Ram Prasad Panchatirtha, Mimansatirtha ..	Pandit Akshay Kumar Shastri ..	1, Dayal Somo Lane, Simla, Calcutta.
Smriti (স্মৃতি).		
FIRST CLASS.		
1 Hem Chandra Chakravarti, Smrititirtha IV (*h*) (*a*) (*v*)(*k*)(*r*)(*x*).	Pandit Narayan Chandra Smrititirtha ..	Sanskrit College, Calcutta.
2 Dakshineswar Goswami, Smrititirtha X(*o*) ..	Pandit Ramhari Smrititirtha (D) ..	Bijay Chatuspathi, Burdwan.
SECOND CLASS.		
3 Rammay Bhattacharyya, Smrititirtha (*b*) ..	Pandit Narayan Chandra Smrititirtha ..	Sanskrit College, Calcutta.
4 Jamini Mohan Chakravarti, Smrititirtha ..	Pandit Nibaran Chandra Smriti Tarkatirtha	Ditto.
5 Bibhuti Bhusan Chakravarti, Smrititirtha ..	Pandit Narayan Chandra Smrititirtha ..	Ditto.
6 Hrishikesh Goswami, Smrititirtha ..	Pandit Harendra Chandra Smrititirtha ..	Gauripur, Mymensingh.
7 Debendra Kumar Chakravarti, Smrititirtha ..	Ditto	Ditto.
Prachin Smriti (প্রাচীন স্মৃতি).		
FIRST CLASS.		
1 Abinash Chandra Sastri, Kavyatirtha, M.A., Smrititirtha V(*g*).	Pandit Narayan Chandra Smrititirtha ..	Sanskrit College, Calcutta.

I Government prize of Rs. 100.
II Government prize of Rs. 100.
VII Government prize of Rs. 25.
VIII Government prize of Rs. 25.

IV Government prize of Rs. 50.
X Government prize of Rs. 25.
V Government prize of Rs. 25.
(*a*) Burdwan prize of Rs. 40.
(*o*) Parbati Debi prize of Rs. 35.
(*g*) Prasanna Kumar Tagore stipend of Rs. 7 a month.
(*f*) Durbhanga stipend of Rs. 13 a month.
(*i*) Dewan Krishna Kanta Nandi stipend of Rs. 7 a month.
(*c*) Hara Kumar Tagore prize of Rs. 25.
(C) Raj Krishna Roy prize of Rs. 50.
(B) Hara Kumar Tagore prize of Rs. 45.
(*k*) Biseswar Chakravarti gold medal.
(*v*) Rangopal Smritibhusan gold medal.
(*r*) Rajarshi Gopal Ch. Acharyya Chowdhuri silver medal.
(*x*) Dinanath Chakravarti gold medal.
(D) Kshetramani prize of Rs. 50.
(*h*) Raja Lokenath Ray stipend of Rs. 6 a month.
(*b*) Darbhanga prize of Rs. 19.

No. and name of candidate, title conferred and reward.	Name of teacher and reward.	Place of *tol*.
Assam Smriti (Srihatya).		
SECOND CLASS.		
1 Ramranjan Bhattacharyya, Smrititirtha ..	Pandit Upendra Chandra K. Vy. Smrititirtha	9-B, Mahim Haldar Street, Kalighat, Calcutta.
Puran.		
FIRST CLASS.		
1 Sarada Prasad Misra, Purantirtha XII(*s*) ..	Pandit Chandrikadatta Misra ..	5, Sukhlal Jahuri Lane, Calcutta.
SECOND CLASS.		
2 Durgadeb Tripathi, Purantirtha	Pandit Jogendranath Tarka Vedantatirtha	50, Dr. Jagabandhu Lane, Calcutta.
Amiyamadhab Chakravarti, Purantirtha ..	Pandit Bhupendra Nath Smrititirtha ..	Ghoramara, Rajshahi.
3 Muralydhar Misra, Purantirtha	Pandit Sarada Prasad Misra, **Rs. 50** ..	5, Sukhlal Jahuri Lane, Calcutta.
4 Kalidas Ray, Purantirtha	Pandit Lalit Mohan Smrititirtha, **Rs. 100**	Naogaon, Rajshahi.
5 Narayan Sarma, Purantirtha	Pandit Purusottam Sastri Vedantatirtha	Indore, Indore.
6 Kantilal Joshi, Purantirtha	Pandit Tara Charan Bhattacharyya ..	Tekmani Sanskrit College, Benares.
7 Surendra Nath Das, Kavyatirtha, B.A., Purantirtha.	Pandit Ramlal Smrititirtha	Sripurbangram, Khulna.
8 Nabagopal Goswami, Sankhyatirtha, Purantitirtha	Pandit Taranath Saptatirtha ..	Darsan *tol*, Pabna.
9 Prabhas Chandra Tripathi, Purantirtha ..	Pandit Lambodar Kavyatirtha ..	Chandaneswar, Egra, Midnapur.
Jyotish.		
SECOND CLASS.		
1 Muktinath Misra, Jyotishtirtha	Pandit Saranan Jha Jyotisacharyya ..	Gidhore, Monghyr.
2 Srikrishna Sarma, Jyotishtirtha	Pandit Ramsuchit Tripathi	Sanskrit Mahavidhyalaya, Indore.
3 Tula Krishna Jha, Jyotishtirtha	Pandit Krishna Chandra Jha ..	Visudhyananda Vidyalaya, Calcutta.
4 Basanta Kumar Acharyya, Jyotishtirtha ..	Pandit Manmathanath Jyotisekhar ..	Gambhirnagar, Ghatal, Midnapur.
5 Kunja Bihari Acharyya, Jyotishtirtha ..	Ditto	Ditto.
Vaishnab Darsan.		
SECOND CLASS.		
1 Nilmani Das Mohanta, Purantirtha, Bhaktitirtha (*u*) (*y*).	Pandit Ram Kantha Tarkatirtha ..	Nabadwip, Nadia.
Kavya.		
FIRST CLASS.		
1 Panchanan Bhattacharyya, Kavyatirtha VI(*d*)	Pandit Haripada K. Smrititirtha (C) ..	Mulajore Sanskrit College, 24-Parganas.
2 Bhutnath Chattopadhyaya, Kavyatirtha IX (*n*)	Private.	
3 Mandalal Goenka, Kavyatirtha	Pandit Yogi Jha Vyakarantirtha, **Rs. 50**	Visudhyananda Vidyalaya, Calcutta.
4 Krishnadvaipayan, Kavyatirtha	Pandit Raghunath Ram Chandra Shastri	Naraharguru Vedic Asram, Indore.
SECOND CLASS.		
5 Hrishikesh Bhattacharyya, Kavyatirtha ..	Pandit Ashutosh Vidyabhusan and Pandit Basanta Kumar Kavyatirtha.	Khalisakota, Barisal.
6 Nisi Kanta Chakravarti, Kavyatirtha ..	Pandit Harendra Chandra K. Vyakarantirtha.	Medda, Brahmanberia, Tippera.
7 Narendra Nath Singha, Kavyatirtha ..	Pandit Sankardeb Kavyatirtha ..	Gurukul, Brindaban, Mutra.
8 Mahesh Datta Dwivedi, Kavyatirtha ..	Pandit Ganga Vishnu Pandey ..	K. Hitakarini Sabha, Jubbalpur.
9 Kalidas Bhattacharyya, Kavyatirtha ..	Pandit Nibaran Chandra Tarkaratna ..	Pranpur, Brahmandi, Faridpur.
10 Purusottam Sukla, Kavyatirtha	Pandit Amrita Lal Vedantatirtha ..	Petlad, Guzrat.
11 Gobardhan Bhattacharyya, Kavyatirtha ..	Pandit Ramratna Vedantaratna ..	Chandannagar, Hooghly.
12 Biswakanta Pandeya, Kavyatirtha	Pandit Keshab Prasad Misra ..	Nawabgunge Hindu University, Benares.
13 Sankarlal Upadhyaya, Kavyatirtha ..	Pandit Jaydatta Sastri	Vedic Sanskrit Pathsala Sedhapur, Ahmedabad.
14 Muralydhar Misra, Kavyatirtha	Mahamahopadhyaya Raghunandan Prasad Tripathi.	54-89, Gobindapura, Benares City.
Amiya Nath Chakravarti, Kavyatirtha ..	Pandit Satinath Vidyabhusan ..	Hemnagar, Mymensingh.
Gauri Nath Sukla, Kavyatirtha	Pandit Amritlal Vedantatirtha ..	Petlad, Guzrat.
15 Rajendranarayan Bhattacharyya, Kavyatirtha ..	Pandit Lalit Mohan Smrititirtha ..	Naogaon, Rajshahi.
16 Jaynarayan Acharyya, Kavyatirtha ..	Pandit Jaynarayan Kavyatirtha ..	Samanta Khanda, Kharuigarh, Midnapur.
17 Mahendra Lal Saha, Kavyatirtha	Private	24, Raja Lane, Calcutta.
Niranjan Misra, Kavyatirtha	Pandit Devdatta Misra	4, Ramjidas Jethia Lane, Calcutta.
18 Sibaram Dikshit, Kavyatirtha	Pandit Ram Chandra Misra ..	Narsinghar, Dhalbhumgar, Singhbhum.
19 Jagadananda Jha, Kavyatirtha	Pandit Yogi Jha Vyakarantirtha ..	12, Sikdarpara Street, Calcutta.
Jehalal Tribedi, Kavyatirtha	Pandit Amritlal Vedantatirtha ..	Petlad, Guzrat.
20 Rameswar Pahari, Kavyatirtha	Pandit Sripati Charan Kavyatirtha ..	Balageria, Midnapur.
Phanindra Nath Bhattacharyya, Kavyatirtha ..	Pandit Taranath Nyayatarkatirtha ..	Patgram, Lesragunge, Dacca.

XII Government prize of Rs. 20.
VI Government prize of Rs. 25.
IX Government prize of Rs. 25.
(*u*) Kali Krishna Pramanik gold medal.
(*y*) Nalin Chandra Saha Silver Medal.

(*s*) Mohendra Nath Goswami gold medal.
(*n*) Jagamohan Mukharjee prize of Rs. 35.
(C) Raj Krishna Roy prize of Rs. 50.
(*d*) Raj Krishna Roy stipend of Rs. 4 a month.

No. and name of candidate, title conferred and reward.	Name of teacher and reward.	Place of tol.
Kavya—*contd.*		
SECOND CLASS—*contd.*		
21 Ramsurati Misra, Kavyatirtha	Pandit Sarada Prasad Misra ..	5, Sukhlal Jahuri Lane, Calcutta.
22 Padmanabha Pati, Kavyatirtha	Pandit Syamsundar Vy. Kavyatirtha ..	Simulkunda, Tekholibazar, Midnapur.
23 Kulada Prasad Ray Chaudhury, Kavyatirtha ..	Pandit Kasinath Kavyatirtha ..	Binyafair, Mymensingh.
24 Keshab Sarma, Kavyatirtha	Pandit Tribhuban Sankar Sarma ..	Dakor, Kaira.
Natabar Lal Gupta	Pandit Jaydatta Sastri	Vedic Sanskrit Pathsala, Sedhapur Ahmedabad.
25 Pramathanath Bhattacharyya, Kavyatirtha ..	Pandit Purandas Saptatirtha ..	15, Mohanbagan Lane, Calcutta.
26 Kalimohan Seal *Das*, Kavyatirtha	Pandit Manmathanath Tarkatirtha ..	1, Madan Mitra Lane, Calcutta.
27 Hara Kumar Bandyopadhyaya, Kavyatirtha ..	Pandit Sujan Gopal Kavyaratna ..	Bagali, Magra, Hooghly.
28 Suresh Chandra Maitra, Kavyatirtha ..	Pandit Satinath Vidyabhusan (A) ..	Hemnagar, Mymensingh.
29 Bidhubhusan Goswami, Kavyatirtha ..	Ditto	Ditto.
30 Ashutosh Vyakarantirtha, Kavyatirtha ..	Pandit Radhacharan K.-Vy. Smrititirtha	Singhimari, Kanthalbari, Rangpur.
31 Jitendranath Bhattacharyya, B.A., Kavyatirtha	Pandit Haripada K. Sm. Mimamsatirtha	73, Pathuria Ghata Street, Calcutta.
32 Sibanath Pandeya, Kavyatirtha	Pandit Raghubir Vedantatirtha ..	22-A, Machuabazar Street, Calcutta.
33 Durlabhjit Pandey, Kavyatirtha	Pandit Rebasankar Meghji Sastri ..	Debidasilalubhoy Sanskrit Pathsala, Gulabodi, Bombay.
Badri Prasad Tripathi, Kavyatirtha ..	Pandit Krishna Chandra Jha ..	Vishudhyanauda Vidyalaya, Calcutta.
Babua Jha, Kavyatirtha	Pandit Ram Chhabila Sastri ..	S. N. Vidyalaya, 6, Mandir Street, Calcutta.
34 Biswanath Sarma, Kavyatirtha	Pandit Bhairabdayalu Sastri	402, Upper Chitpur Road, Pulkatra, Calcutta.
Manmathanath Gangopadhyaya, B A, Kavyatirtha.	Pandit Srijib Nyayatirtha, M.A. ..	Bhatpara, 24-Parganas.
Panchanan Ray, Kavyatirtha	Pandit Ramraksha Tarkatirtha ..	Aligunge, Midnapur.
35 Lalmohan Mukhopadhyaya, Kavyatirtha ..	Pandit Chandramohan Kavyabinode ..	Comilla, Tippera
36 Manoranjan Chaudhury, Kavyatirtha ..	Pandit Upendra Chandra Smritititirtha ..	9-B, Mahim Haldar Street, Calcutta.
Nanibhusan Chakravarti, Kavyatirtha .	Pandit Kedarnath Bharati	Jessore, Jessore.
37 Kshetranath Bandyopadhyaya, Kavyatirtha ..	Pandit Basudeb K. Sm. Mimansatirtha ..	Baidyapur, Burdwan.
Kalikranjan Mukhopadhyaya, Vedantatirtha, M.A., Kavyatirtha.	Pandit Akshay Kumar Sastri ..	1, Dayal Some Lane, Calcutta.
38 Ramdayal Tripathi, Kavyatirtha	Pandit Ramdayalu Sastri	Harda, Hosangabad.
39 Atuleswar Bhattacharyya, Kavyatirtha ..	Pandit Sasi Kumar Tarkatirtha ..	Gabkhan, Barisal.
40 Mohit Kumar Mukhopadhyaya, Kavyatirtha ..	Pandit Harendranath Vedantatirtha ..	Boinchee, Hooghly.
41 Durganath Jha, Kavyatirtha	Pandit Debananda Jha	2, Baranashi Ghosh Street, Calcutta.
Bhuban Mohan Chakravarti, Kavyatirtha ..	Pandit Surendra Chandra Tarkatirtha ..	Kalikacha, Sarail, Tippera.
42 Harisadhan Chakravarti, Kavyatirtha ..	Pandit Raghupati K. Tarkatirtha ..	Paikmajita, Midnapur.
Lalitkumar Karmakar, Kavyatirtha ..	Pandit Niradranjan Sankhyatirtha ..	Mahilara, Barisal.
43 Biswesswar Chakravarti, Kavyatirtha ..	Pandit Ashutosh Smritititirtha ..	Sangdia, Solarkola, Khulna.
Gauri Sankar Acharyya, Kavyatirtha ..	Pandit Raghunath Misra K. Vyakarantirtha	Khallikot, Ganjam.
44 Hemanta Kumar Bhattacharyya, Kavyatirtha ..	Pandit Akshaya Kumar Sastri ..	1, Dayal Some Lane, Calcutta.
45 Bodhraj Upadhyaya, Kavyatirtha	Pandit Bishnu Prasad Bhandari, Sahityacharyya.	93-2, Baitakkhana Road, Calcutta.
Bhudeb Kumar Goswami, Kavyatirtha ..	Pandit Bireswar Tarkatirtha ..	Bijay Chatuspathi, Burdwan.
46 Narayan Rath Kavyatirtha	Pandit Artabandhu Mahapatra, Kavyatirtha.	Binayakpur, Sarankul, Nayagarh, Puri.
Ramhari Bhattacharyya, Kavyatirtha ..	Pandit Panchanan K. Smritititirtha ..	5-A, Ramkrishna Bagchi Lane, Calcutta.
47 Biraja Charan Pradhan, Kavyatirtha ..	Pandit Jogendranath Kavyatirtha .	Mohati, Herla, Midnapur.
48 Khagendranath Acharyya, Kavyatirtha ..	Pandit Haripada Panchatirtha ..	Radhanath Chatuspathi, Pabna.
49 Gaurdas Brahmachari, Kavyatirtha ..	Pandit Sachindra Chandra Panchatirtha ..	Mayapur, Nadia.
Hirendranath Bhattacharyya, Kavyatirtha ..	Pandit Bhabaranjan Tarkatirtha, Rs. 50 ..	Rangpur, Rangpur.
Narayan Das Gangopadhyaya, Kavyatirtha ..	Pandit Kedarnath Bharati ..	Jessore, Jessore.
Ramesh Chandra Bhattacharyya, Kavyatirtha ..	Pandit Harendra Chandra K. Vyakarantirtha.	Medda, Brahmanberia, Tippera
50 Srimati Susila Devi, Kavyatirtha	Pandit Jagannath Sastri	Jhansi, Jhansi.
Ramsubhag Ojha, Kavyatirtha	Pandit Rishiraj Tripathi	10, Jagabandhu Baral Lane, Calcutta.
Manoranjan Bhattacharyya, Kavyatirtha ..	Pandit Taranath Saptatirtha ..	Darsan *tol*, Pabna.
Bibhuti Bhusan Chakravarti, Kavyatirtha ..	Pandit Dibakar Vedantapanchanan ..	Contai, Midnapur.
Ashutosh Bhattacharyya, Kavyatirtha ..	Pandit Bhupendranath Smritititirtha ..	Ghoramara, Rajshahi.
51 Srutidhar Jha, Kavyatirtha	Pandit Debananda Jha, Rs. 100 ..	2, Baranasi Ghosh Street, Calcutta.
Babulal Bhattacharyya, Kavyatirtha ..	Pandit Srijib Nyayatirtha, M.A. ..	Bhatpara, 24-Parganas.
Bireswar Bandyopadhyaya, Kavyatirtha ..	Pandit Haranath Sastri	81, Raja Naba Krishna Street, Calcutta.
Madhusudan Bhattacharyya, Kavyatirtha ..	Pandit Lalitmohan Smritititirtha ..	Naogaon, Rajshahi.

(A) Burdwan prize of Rs. 45.

	No. and name of candidate, title conferred and reward.	Name of teacher and reward.	Place of *tol*.
	Kavya—*concld.*		
	SECOND CLASS—*concld.*		
52	Syama Pada Bhattacharyya, Kavyatirtha	Pandit Rameshwar Chandra Vedantatirtha ..	Bijay Chatuspathi, Burdwan.
	Jageswar Jha, Kavyatirtha	Pandit Tara Charan Bhattacharyya	Tekmani Sanskrit College, Benares City.
	Ramshashi Bhattacharyya, Kavyatirtha ..	Pandit Tripura Charan Siromani .	Enathbazar, Chittagong.
53	Parshnath Chakravarti, Kavyatirtha ..	Pandit Ratikanta Sankhyatirtha ..	Sibpur, Howrah.
	Baidyanath Bhattacharyya, Kavyatirtha ..	Pandit Bireswar Tarkatirtha ..	Bijay Chatuspathi, Burdwan.
	Umapada Bhattacharyya, Kavyatirtha ..	Pandit Kalikinkar Sattirtha .. .	Gangatikuri, Burdwan.
	Mani Sankar Sarma, Kavyatirtha	Pandit Gopikrishna Sastri	Ujjain, Ujjain.
54	Jagannath Sarangi, Kavyatirtha	Pandit Brajanarayan Sastri .. .	20, Ahiritola Street, Calcutta.
	Hem Chandra Bhattacharyya, Kavyatirtha ..	Pandit Haridas Tarkasidhanta .	Dhaljora, Rupapat, Faridpur.
55	Sambhunath Sarangi, Kavyatirtha ..	Pandit Siddheswar Smrititirtha ..	Chilkigarh, Gidhni, Midnapur.
	Srutasagar Jain, Kavyatirtha	Pandit Baburam Sastri	Jain Sanskrit Pathsala, Sangor.
56	Tribhuvannath Pathak, Kavyatirtha ..	Pandit Raghubir Vedantatirtha ..	22-A, Machuabazar Street, Calcutta.
	Nisikanta Das, Kavyatirtha	Pandit Ratikanta Sankhyatirtha, Rs. 50 .	Sibpur, Howrah.
	Banischandra Mukhopadhyaya, Kavyatirtha ..	Pandit Kalikinkar Sattirtha	Gangatikuri, Burdwan.
57	Birbhadra Sarma Vedatirtha, Kavyatirtha .	Pandit Gaurinath Pathak	Visudhyananda Pathsala, Benares.
	Tarapada Bhattacharyya, Kavyatirtha ..	Pandit Kali Pada Sastri	Pasupati Basu *tol*, 5, Biswakosh Lane, Bagbazar, Calcutta.
58	Sadhan Chandra Bhattacharyya, Kavyatirtha .	Pandit Bhabani Bhusan K. Vy. Sankhyatirtha.	31, Deb Lane, Entally, Calcutta.
	Dattatraya, Kavyatirtha	Pandit Gajanan Sastri	Sanskrit Maha Vidyalaya, Indore
59	Jagadish Misra, Kavyatirtha	Pandit Debananda Jha . ..	2, Baranasi Ghosh Street, Calcutta.
	Gopinath Tripathi, Kavyatirtha . ..	Pandit Brajanarayan Sastri	20, Ahiritola Street, Calcutta.
	Ashutosh Bhattacharyya, Kavyatirtha ..	Pandit Harimohan K. Smrititirtha ..	Raikali, Bogra.
	Jnanendranath Chaudhury, Kavyatirtha ..	Pandit Bhabaranjan Tarkatirtha ..	Rangpur, Rangpur.
60	Nisakar Roy, Kavyatirtha	Pandit Bhubanmohan K. Vy Sankhyatirtha	10, Sarkarbari Lane, Calcutta.
	Siddheswardayalu Sukla, Kavyatirtha ..	Pandit Krishna Chaitanya Debraj Sastri ..	Hitaishini Sanskrit Pathsala, Ajmeer.
61	Suresh Chandra Jha, Kavyatirtha	Pandit Yogi Jha Vyakarantirtha ..	12, Sikdar Para Street, Calcutta.
	Kalikanta Chaudhury, Kavyatirtha ..	Pandit Durga Prasanna Vidyabhusan ..	Pabna, Pabna.
	Niradbaran Chakravarti, Kavyatirtha ..	Pandit Chandramohan Kavyabinode ..	Comilla, Tippera
	Dinesh Chandra Chakravarti, Kavyatirtha ..	Pandit Taranath Smritibhusan ..	Sabdi, Bagrabazar, Tippera.
62	Panchanan Karmakar, Kavyatirtha . ..	Pandit Satinath Vidyabhusan ..	Hemnagar, Mymensingh
	Bhanudatta Patel, Kavyatirtha	Pandit Maya Sankar Sarma	Sukhatirtha, Broach.
63	Subash Tripathi, Kavyatirtha	Pandit Ram Chhabila Sastri	S. N. Vidyalaya, 6, Mandir Street, Calcutta.
	Tikaram Upadhyaya, Kavyatirtha	Pandit Bishnu Prasad Bhandari Sahityacharyya	93-2, Baitakkhana Road, Calcutta.
64	Basudeb Tribedi, Kavyatirtha	Pabdit Tara Charan Bhattacharyya ..	Tekmani Sanskrit College, Benares City
	Pandurang Krishnasawlapukar, Kavyatirtha ..	Pandit Janardan Madhab Kamande, B.A.	Nagpur College, Nagpur.
65	Ramanujacharyya, Kavyatirtha	Pandit Raghubir Vedantatirtha ..	Visudhyananda Vidyalava, Calcutta.
	Nandagopal Goswami, Kavyatirtha	Pandit Atulkrishna Panchatirtha, Rs. 50	Nabadwip, Nadia.
	Tarak Charan Chakravarti, Kavyatirtha ..	Pandit Kali Pada Sastri	5, Biswakosh Lane, P. Basu *tol*, Calcutta.
	Gangadhar Bhunia, Kavyatirtha	Pandit Upendramohan Sankhyatirtha ..	11, Chaudhury Lane, Calcutta.
	Girija Sankar Dwivedi, Kavyatirtha ..	Pandit Amritalal Vedantatirtha ..	Petlad, Guzrat.
	Ram Chandra, Kavyatirtha	Pandit Santiraj Sastri	Digambar Jain, Sanskrit Vidyalaya, Nagpur.
66	Brisabhalinga Sibacharyya	Pandit Gaurinath Pathak	Visudhyananda Vidyalaya, Benares.
	Gobinda Das Praharaj, Kavyatirtha ..	Pandit Raghunath Misra K. Vyakarantirtha.	Khallikot, Ganjam.
67	Srimati Susila Debi, Kavyatirtha ..	Pandit Ranganath Pathak	Patal, Patna
	Girish Chandra Adhikari, Kavyatirtha ..	Pandit Ratikanta Sankhyatirtha ..	Sibpur, Howrah.
	Lokenath Misra, Kavyatirtha	Pandit Ramraksha Tarkatirtha ..	Aligunge, Midnapur.
	Panchananda Sarkar, Kavyatirtha	Pandit Amiyamadhab K. Vyakarantirtha	Arani, Rajshahi.
68	Krishna Chandra Das, Kavyatirtha ..	Pandit Susil Kumar Vyakarantirtha ..	Danpur, Mymensingh.
	Bhabatosh Bhattacharyya, Kavyatirtha ..	Pandit Rakhaldas Nyayatarkatirtha .	Bishnupur, Bankura
	Debnarayan Goswami, Kavyatirtha ..	Pandit Bireswar Tarkatirtha ..	Bijay Chatuspathi, Burdwan
	Panini Vyakaran.		
	FIRST CLASS.		
1	Bhagaban Pandey, Vyakarantirtha ..	Pandit Anantalal Sastri Vedantatirtha ..	Petlad, Baroda.
	SECOND CLASS.		
2	Jagannath Chaturvedi, Vyakarantirtha (*l*) ..	Pandit Sakalnarayan Sarma	Sanskrit College, Calcutta.
3	Bholanath Misra, Vyakarantirtha (*m*) .	Pandit Debananda Jha Vedaratna ..	2, Baranasi Ghose Street, Calcutta.

(*l*) Thakur Protapnarayan Deb Barma gold medal

(*m*) Thakur Protapnarayan Deb Barma gold medal.

No. and name of candidate, title conferred and reward.	Name of teacher and reward.	Place of *tol*.
Panini Vyakaran- *concld.*		
SECOND CLASS—*concld.*		
4 Umacharan Pandeya Kavyatirtha, Vyakarantirtha	Private	6, Rajendra Mallick Street, Calcutta.
5 Sukdev Sarma, Vyakarantirtha	Pandit Nirsan Misra	Lakshmipur, Bhagalpur.
6 Prem Chandra Jain, Vyakarantirtha ..	Pandit Ananta Sastri Padke ..	Sadbad Jain Digambar Pathsala, Benares
7 Nebanath Jha, Vyakarantirtha	Pandit Debananda Jha Vedaratna ..	2, Baranasi Ghosh Street, Calcutta.
8 Suresh Misra, Vyakarantirtha .. .	Pandit Sarada Prasad Misra ..	5, Sukhlal Jahuri Lane, Calcutta
9 Ramakanta Jha, Vyakarantirtha	Pandit Debananda Jha, Vedaratna ..	2, Baranasi Ghose Street, Calcutta.
Saraswat.		
FIRST CLASS		
1 Kalicharan Rath Kavyatirtha, Vyakarantirtha ..	Pandit Ram Chandra Rath	Digapahandi, Ganjam
SECOND CLASS.		
2 Debakinandan Sarma, Vyakarantirtha ..	Pandit Yeshantaraj Vyakaran Nyayatirtha.	Giridharilal Jain Pathsala, Beawar.
3 Dhirendranath Acharyya, Vyakarantirtha ..	Pandit Chandrasekhar Sastri . ..	6, Godhulia, Bengalitola, Benares City.
4 Lokenath Misra, Vyakarantirtha	Pandit Shyam Sundar K Vyakarantirtha	Simulkunda, Tekhalibazar, Midnapur.
5 Rashmohan Sarma, Vyakarantirtha ..	Pandit Chandramohan Kavyabinode ..	Comilla, Tippera.
6 Dinesh Chandra Kavyatirtha, Vyakarantirtha ..	Pandit Sarada Prasad Misra	5, Sukhlal Jahuri Lane, Calcutta.
7 Ramgobinda Pandey, Vyakarantirtha ..	Pandit Raghubir Vedantatirtha ..	Visudhyananda Vidyalaya, Calcutta.
8 Biswanath Dwivedi, Vyakarantirtha ..	Ditto	Ditto.
Jageram Sarma, Vyakarantirtha	Ditto	Ditto
9 Hiralal Jain, Vyakarantirtha	Pandit Radhakrishna Sastri	Giridharilal Jain Pathsala, Beawar.
10 Sarat Chandra Pati, Vyakarantirtha ..	Pandit Kalikumar Panda Vyakarantirtha	Anulia, Dehurda, Balasore.
11 Mathuranath Chakravarti, Vyakarantirtha ..	Pandit Dharanikanta Sastri	Sherpur, Mymensingh.
12 Raghunandan Pandey, Vyakarantirtha ..	Pandit Suryyanarayan Pandey ..	Hathua Raj Sanskrit Pathsala, Bankipur, Patna.
13 Dwijendranath Dwivedi, Vyakarantirtha ..	Pandit Iswar Chandra Kavyatirtha ..	Chandri, Chichira, Midnapur.
14 Parasnath Pandeya, Vyakarantirtha ..	Pandit Ramchhabila Sastri	S. N. Vidyalaya, 6, Mandir Street, Calcutta.
15 Srinath Jha, Vyakarantirtha	Pandit Raghubir Tribedi	Visudhyananda Vidyalaya, Calcutta.
16 Srikantha Jha, Vyakarantirtha	Pandit Sibanandan Pandey	93-2, Baitakkhana Road, Calcutta.
17 Milap Chandra, Vyakarantirtha	Pandit Chandramal Vyakarantirtha ..	Giridharilal Jain Pathsala, Beawar
18 Girish Chandra Das, Vyakarantirtha ..	Pandit Bhutnath Misra Kavyatirtha ..	Lakhi, Hertu, Midnapur.
19 Bhusan Misra, Vyakarantirtha	Pandit Sibanandan Panday	93-2, Baitakkhana Road, Calcutta.
20 Gopal Upadhyaya, Vyakarantirtha .	Pandit Nanda Panday .. .	Pathra, Saran.
Sitaram Pathak, Vyakarantirtha	Pandit Bishnu Prasad Bhandari ..	93-2, Baitakkhana Road, Calcutta.
21 Lakshminarayan Srimali, Vyakarantirtha ..	Pandit Prabhakar Sastri	Setia Jain Pathsala, Bikaner.
22 Jajneswar Panda, Vyakarantirtha	Pandit Pramathanath Kavyatirtha ..	Hamirpur, Mirgoda, Midnapur.
Bhangarlal Jain, Vyakarantirtha	Pandit Radhakrishna Sastri	Giridharilal Jain, Pathsala, Beawar.
23 Banamali Misra, Vyakarantirtha	Pandit Brigunath Kavyatirtha ..	Sarada Mandir, Masore, Patna.
24 Rameswar Jha, Vyakarantirtha	Pandit Yogi Jha Vyakarantirtha ..	12, Sikdarpara Street, Calcutta.
25 Harish Chandra Chattopadhyaya, Vyakarantirtha	Pandit Brajanarayan Sastri	20, Ahiritola Street, Calcutta.
Kanhyalal, Vyakarantirtha	Pandit Radhakrishna Sastri	Giridharilal Jain Pathsala, Beawar.
26 Jadubangsa Jha, Vyakarantirtha	Pandit Yogi Jha Vyakarantirtha ..	Visudhyananda Vidyalaya, Calcutta.
Kamala Prasad Misra, Vyakarantirtha ..	Pandit Suryyanarayan Misra	Banka, Bhagalpur.
Ramgopal Goswami, Vyakarantirtha ..	Pandit Lalit Mohan Smritititirtha ..	Naogaon, Rajshahi.
27 Muktinath Pandey, Vyakarantirtha	Pandit Raghubir Vedantatirtha ..	Visudhyananda Vidyalaya, Calcutta.
Harihar Pandey, Vyakarantirtha	Pandit Muralydhar Misra	5, Sukhlal Jahuri Lane, Calcutta.
28 Kailash Pati Dwivedi, Vyakarantirtha ..	Pandit Raghubir Tribedi	Visudhyananda Vidyalaya, Calcutta.
Gobinda Chandra Kar	Pandit Pramatha Nath Kavyatirtha ..	Hamirpur, Mirgoda, Midnapur.
Prayag Ratnamala.		
SECOND CLASS.		
1 Bhagaban Chandra Goswami, Vyakarantirtha ..	Pandit Manmatha Nath Tarkatirtha ..	Bhatpara, 24-Parganas.
2 Haragobinda Deb Sarma, Vyakarantirtha ..	Pandit Kanak Chandra Vyakarantirtha ..	Chaukhti Pathsala, Kamrup.
3 Dharma Nath Dev Misra, Vyakarantirtha ..	Pandit Sambhunath Vyakarantirtha ..	Bahajani, Chandkuchi, Kamrup.
4 Raghunandan Deb Goswami, Vyakarantirtha ..	Pandit Saranan Nyaya-Tarkatirtha ..	Gauripore, Goalpara, Assam.
Kalap.		
FIRST CLASS.		
1 Ramesh Chandra Chakravarti, Vyakarantirtha XI	Pandit Upendra Chandra Tarkacharyya, Pandit Aswini Kumar Kavyatirtha and Pandit Jatindra Nath Vidyasagar.	Kabindra College, Gaila, Barisal.

XI Government prize of Rs. 20.

No. and name of candidate, title conferred and reward.	Name of teacher and reward.	Place of *tol*.
Kalap—*contd.*		
SECOND CLASS.		
2 Kumudranjan Goswami Vyakarantirtha ..	Pandit Harendra Chandra Smrititirtha ..	Gauripur, Mymensingh.
3 Dwijendranath Bhattacharyya, Vyakarantirtha	Pandit Jadabnath Kavyatirtha ..	Halalia, Mymensingh.
4 Harikumar Chakravarti, Vyakarantirtha ..	Pandit Jasoda Kumar Smrititirtha, Pandit Ashutosh Sankhyatirtha and Pandit Mrityunjay Kavyatirtha	Sanskrit College, Nonkhali.
Hem Chandra Chakravarti, Vyakarantirtha ..	Pandit Rebatiraman Bhattacharyya and Pandit Barada Kanta Vidyabinode	Sukhair, Sylhet.
5 Bidhuranjan Bhattacharyya, Vyakarantirtha ..	Pandit Hara Nath Sastri	81, Raja Naba Krishna Street, Calcutta.
6 Binode Bihari Bhattacharyya, Vyakarantirtha	Pandit Sitanath Vyakaranatirtha ..	Kethuri, Noakhali.
7 Ramesh Chandra Chakravarti, Vyakarantirtha ..	Pandit Syama Charan Smrititirtha ..	Bajapti, Tippera.
8 Chandra Nath Chakravarti, Vyakarantirtha ..	Pandit Herambanath Tarkatirtha ..	Sanskrit College, Dacca.
9 Kshetra Mohan Chakravarti, Vyakarantirtha ..	Ditto	Ditto
Jogesh Chandra Bhattacharyya, Vyakarantirtha	Pandit Tarak Chandra Smritibhusan ..	Gauripore, Mymensingh
Padmanath Bhattacharyya, Vyakarantirtha ..	Pandit Krishna Sadav Vidyanidhi ..	Hanskhola, Rajnagar, Sylhet.
10 Aswini Kumar Sarma, Vyakarantirtha .	Pandit Mahesh Chandra Vy. Sankhyatirtha	Hatdebala, Purbadhala, Mymensingh.
11 Kasi Sankar Chakravarti, Vyakarantirtha ..	Pandit Uma Charan Tarkaratna .	Sanskrit College, Chittagong.
Umesh Chandra Chakravarti, Vyakarantirtha ..	Pandit Surryya Kanta Sahityasastri, **Rs. 50**	Dirghaldi, Boallabari, Tippera.
12 Anathbandhu Chakravarti, Vyakarantirtha ..	Pandit Rajanikanta Vyakrantirtha .	Kangai, Dollainawabpur, Tippera.
Gauranga Chandra Chakravarti, Vyakrantirtha ..	Pandit Nabin Chandra Vyakaranatirtha ..	Balakhal, Tippera.
13 Sudhangsu Kumar Bhattacharyya, Vyakarantirtha	Pandit Nirada Charan Smritibhusan ..	Medinimandal, Dacca.
14 Pramathanath Bhattacharyya, Vyakarantirtha ..	Pandit Herambo Nath Tarkatirtha .	Sanskrit College, Dacca.
15 Abani Sankar Bhattacharyya, Vyakarantirtha .	Pandit Chandra Mohan Kavyabinode ..	Comilla, Tippera.
16 Dinabandhu Thakur Chakravarti, Vyakarantirtha	Pandit Bhabaranjan Tarkatirtha ..	Rangpur, Rangpur.
17 Madhusudan Goswami, Vyakarantirtha ..	Pandit Jiban Krishna Tarkatirtha ..	Armanitola, Dacca.
18 Hirendra Chandra Roy, Vyakarantirtha ..	Pandit Kali krishna Tarkatirtha ..	Gauripur, Mymensingh.
19 Chandrakanta Chakravarti, Vyakarantirtha ..	Pandit Uma Charan Tarkaratna ..	Sanskrit College, Chittagong
Umesh Chandra Chakravarti, Vyakarantirtha .	Pandit Suryyakanta Sahitya Sastri .	Dirghaldi, Boallabari, Tippera.
20 Kalankaharan Chakravarti, Vyakarantirtha ..	Pandit Upendra Chandra Smrititirtha ..	6-B, Mahim Haldar Street, Kalighat, Calcutta
Jogendra Nath Chakravarti, Vyakarantirtha ..	Pandit Surryya Kanta Sahityasastri ..	Dirghaldi, Boallabari, Tippera
21 Trinath Prasanna Bhattacharyya, Vyakarantirtha	Pandit Syama Charan Smrititirtha ..	Bajapti, Tippera.
22 Radhaballabh Chakravarti, Vyakarantirtha ..	Pandit Bama Charan Siddhantaratna .	Jantrail, Nabalgunge, Dacca.
23 Manoranjan Bhattacharyya, Vyakarantirtha ..	Pandit Ram Chandra Sastri	12, Sitanath Road, Calcutta.
Banipada Desamukhya, Vyakarantirtha ..	Pandit Sasikumar Vidyabhusan ..	Jubilee *tol*, Berhampore, Khagra, Murshidabad.
24 Krishna Pada Bhattacharyya, Vyakarantirtha ..	Pandit Dinesh Chandra Smrititirtha ..	Jamalpur, Mymensingh
25 Ralcharan Das Sarkar, Vyakarantirtha ..	Pandit Haranath Shastri	81, Raja Naba Krishna Street, Calcutta.
26 Birajmohan Chakravarti, Vyakarantirtha ..	Pandit Nirada Charan Smritibhusan .	Medinimandal, Dacca
27 Girindra Kumar Kanjilal, Vyakarantirtha ..	Pandit Syama Charan Smrititirtha ..	Bajapti, Tippera
28 Sureswar Ray, Vyakarantirtha	Pandit Bhudeb Chandra K. Sankhyatirtha	Galla, Barisal.
Asitaranjan Gupta, Vyakarantirtha	Pandit Ganga Charan Vidyanidhi ..	Mymensingh.
Manoranjan Bhattacharyya, Vyakarantirtha ..	Pandit Tripura Charan Siromani ..	Enathbazar, Chittagong
29 Krishna Prasanna Bhattacharyya, Vyakarantirtha	Pandit Kailash Chandra Vidyabhusan ..	Amtali, Tangibari, Dacca.
30 Gopal Pada Bhattacharyya, Vyakarantirtha ..	Pandit Birendra Kumar K. Vy. Smrititirtha	79, Khalishpura, Benares City.
Kali Pada Bhattacharyya, Vyakarantirtha ..	Pandit Gourgobinda Goswami ..	Bithangal, Sylhet.
31 Kala Chand Chattopadhyaya, Vyakarantirtha ..	Pandit Ganga Charan Vidyanidhi ..	Mymensingh
Sachindra Chandra Acharyya, Vyakarantirtha	Pandit Suryya Kumar Smrititirtha ..	Comilla, Tippera.
Rajendra Kishore Bhattacharyya, Vyakarantirtha	Pandit Rash Mohan Smritibhusan and Pandit Jagadwip Kavyabhusan	Agartala, Tippera.
32 Nalinikanta Chakravarti, Vyakarantirtha ..	Pandit Narendra Kumar Siddhantabhusan	Katihali, Kaltali, Mymensingh.
Rajendra Chandra Chaudhury, Vyakarantirtha ..	Pandit Kumud Chandra Vy. Smrititirtha	Manas, Barhatta, Mymensingh.
33 Sudhangsu Bhusan Bhattacharyya, Vyakarantirtha	Pandit Harendra Chandra Smrititirtha ..	Gauripur Mymensingh.
Jagadish Chandra Chakravarti, Vyakarantirtha	Pandit Suryya Kumar Smrititirtha ..	Comilla, Tippera.
34 Ramani Mohan Chakravarti, Vyakarantirtha. ..	Pandit Kali Kanta Smritibhusan ..	Bhatikhain, Chittagong.
35 Satis Chandra Acharyya, Vyakarantirtha ..	Pandit Nishibhusan Vyakaran Kavyatirtha	Fategungepur, Nagar, Faridpur.
Nagendranath Acharyya, Vyakarantirtha ..	Pandit Akshay Kumar Vidyabhusan ..	Dalakot, Tippera.
36 Byomkesh Bhattacharyya, Vyakarantirtha ..	Pandit Sitanath Vedantasastri ..	Chinsura, Hooghly.
37 Kali Mohan Chakravarti, Vyakarantirtha ..	Pandit Nilmani Sastrasagar	75-2-B, Masjidbari Street, Calcutta.
Ranajakumar Bhattacharyya, Vyakarantirtha ..	Pandit Atul Krishna Panchatirtha ..	Chaitanya Chatuspathi, Nabadwip, Nadia.
38 Ketakiranjan Bhattacharyya, Vyakarantirtha ..	Pandit Ramanikanta Siddhantaratna ..	Maharani Hemanta Kumari Sanskrit College, Rajshahi

No. and name of candidate, title conferred and reward.	Name of teacher and reward.	Place of *tol*.
Kalap—*concld.*		
SECOND CLASS—*concld.*		
39 Nepaleswar Bhattacharyya, Vyakarantirtha ..	Pandit Kali Charan Smritiratna ..	Agarpara, Kamarhati, 24-Parganas.
Nagarbasi Roy, Vyakarantirtha.	Pandit Prasanna Kumar Tarkanidhi ..	Bholachang, Tippera.
40 Chandramadhab Das, Vyakarantirtha ..	Pandit Srinath Vidyabhusan	Pursail, Malkhanagar, Dacca.
Supadma.		
FIRST CLASS.		
1 Ramesh Chandra Bhattacharyya, Vyakarantirtha (XIV).	Pandit Ramratna Vedantaratna ..	Lalbagan, Chandannagar, Hooghly.
SECOND CLASS.		
2 Banka Bihari Ramanidas, Vyakarantirtha ..	Pandit Kedar Nath Bharati	Jessore, Jessore.
3 Narendra Nath Bhattacharyya, Vyakarantirtha	Pandit Manmathanath Panchatirtha ..	1, Madan Mitra Lane, Calcutta.
Mugdhabodha.		
FIRST CLASS.		
1 Prakash Chandra Mukhopadhyaya, Vyakarantirtha (XIII).	Pandit Basudeb K. Smrititirtha ..	Baidyapur, Burdwan.
SECOND CLASS.		
2 Kesab Nath Bhattacharyya, Vyakarantirtha ..	Pandit Lalit Mohan Smrititirtha ..	Naogaon, Rajshahi.
3 Kshitish Chandra Sarkar, Vyakarantirtha ..	Pandit Atul Krishna Panchatirtha ..	Chaitanya Chatuspathi, Nabadwip, Nadia.
4 Santosh Narayan Biswas, Vyakarantirtha ..	Pandit Lalit Mohan Smrititirtha ..	Naogaon, Rajshahi.
5 Benimadhab Goswami, Vyakarantirtha ..	Pandit Abinash Chandra Sastri ..	Ganga Charan Chatuspathi, Bhagyakul, Dacca.
6 Sudhirkumar Chakravarti, Vyakarantirtha ..	Pandit Atulkrishna Panchatirtha ..	Chaitanya Chatuspathi, Nabadwip, Nadia.
Anadimohan Goswami, Vyakarantirtha ..	Pandit Satyananda Goswami	161, Harrison Road, Calcutta.
7 Ramranjan Dey, Vyakarantirtha	Pandit Sivanath Smrititirtha ..	Kaligunge, Nadia.
8 Amritanath Mukhopadhyaya, Vyakarantirtha ..	Pandit Goursundar Bhagabatdarsanacharyya.	176, Upper Chitpur Road, Calcutta.
9 Sailendra Kumar Gupta, Vyakarantirtha ..	Pandit Kalipada Sastri	Pasupati Basu Chatuspathi, 5, Biswakosh Lane, Baghbazar, Calcutta.
Kiran Sankar Mukhopadhyaya, Vyakarantirtha	Pandit Ratikanta K. Vy. Sankhyatirtha ..	Sasthitala Chatuspathi, Shibpore, Howrah
10 Pasupati Chakravarti, Vyakarantirtha ..	Pandit Dasarathi Smrititirtha ..	Darhatta, Hooghly.
11 Girindrakumar Roy, Vyakarantirtha ..	Pandit Lalit Mohan Smrititirtha ..	Naogaon, Rajshahi.
12 Biswesar Acharyya, Vyakarantirtha ..	Pandit Haran Chandra Smrititirtha ..	Tiluri, Bankura.
13 Dhirendra Nath Lahiri, Vyakarantirtha ..	Pandit Lalit Mohan Smrititirtha ..	Naogaon, Rajshahi.
14 Sambhunath Sarma, Vyakarantirtha	Pandit Atul Krishna Panchatirtha ..	Chaitanya Chatuspathi, Nabadwip, Nadia.
15 Rasimohan Goswami, Vyakarantirtha ..	Ditto	Ditto.
16 Satyendranath Sen, Vyakarantirtha	Pandit Kumud Nath Sen	Natore-Kapuriapatti, Natore, Rajshahi.
17. Anandamohan Chakravarti, Vyakarantirtha ..	Pandit Abinash Chandra Sastri ..	Ganga Charan Chatuspathi, Bhagyakul Dacca.
18 Srimati Kamal Basini Devi, Vyakarantirtha ..	Pandit Bhubaranjan Tarkatirtha ..	Rangpur, Rangpur.
19 Gosthabihari Bhattacharyya, Vyakarantirtha ..	Pandit Bhabani Bhusan K. Vy. Sankhyatirtha.	31, Deb Lane, Entally, Calcutta.
20 Herambanath Bhattacharyya, Vyakarantirtha ..	Pandit Rati Kanta K. Vy. Sankhyatirtha	Sasthitala Chatuspathi, Shibpore, Howrah.
Sankshiptasar.		
SECOND CLASS.		
1 Haripada Kavyatirtha, Vyakarantirtha ..	Pandit Rammay K. Vyakarantirtha ..	Ghurisa, Birbhum.
2 Radhabinode Patra, Vyakarantirtha ..	Pandit Ramdas Smrititirtha	Bankura, Bankura.
Ashutosh Kar, Vyakarantirtha	Pandit Bhabani Bhusan K. Vy. Sankhyatirtha.	31, Deb Lane, Entally, Calcutta.
3 Sripatinath Chakravarti, Vyakarantirtha ..	Pandit Ramdeb Smrititirtha	29, Badurbagan Street, Calcutta.
4 Gobinda Prasad Goswami, Vyakarantirtha ..	Pandit Ramhari Smrititirtha	Bijay Chatuspathi, Burdwan.
5 Gauri Sankar Bhattacharyya, Vyakarantirtha ..	Pandit Kali Kinkar Sathtiritha ..	Gangatikuri, Burdwan.
6 Ramesh Chandra Bhattacharyya, Vyakarantirtha	Pandit Nabakanta Tarka-Darsantirtha ..	Bhemua, Midnapur.
Harinamamrita Vyakaran.		
SECOND CLASS.		
1 Shyam Sundar Das, Vyakarantirtha ..	Pandit Atul Krishna Kavyatirtha ..	Brindaban, Muttra.
2 Ramadas Pal, Vyakarantirtha	Pandit Shyamananda Thakur Vyakarantirtha.	Srikanda, Burdwan.
3 Kedarnath Roy, Vyakarantirtha	Pandit Gobinda Chandra Kavyatirtha ..	Baranagar, Alambazar, 24-Parganas.
4 Srikrishna Das, Vyakarantirtha	Pandit Atul Krishna Kavyatirtha ..	Brindaban, Muttra, U. P.
Pali Vinay Pitak.		
SECOND CLASS.		
1 Jnanajyoti Sraman, Vinaybisarad (*t*) ..	Pandit Dharmaratna Vaksshu Vinay Visarad.	Rajnagar, Rajabhaban, Chittagong.

(XIII) Government prize of Rs. 20. (XIV) Government prize of Rs. 20. (*t*) Anagarika Dharma-Pala gold medal.

J. M. BOTTOMLEY,
Director of Public Instruction, Bengal (offg.).

Council of Post-Graduate Teaching in Arts, University of Calcutta.

Asutosh Building, the 11th September 1931.

B.A. EXAMINATION, 1933.

Linguistics.

(Pass Course.)

Paper I.—General Principles of Linguistic Science, Growth and Development of Language.

Books recommended—

Sweet—History of Language (Dent).
Wyld—Historical Study of the Mother Tongue (Murray).

Paper II.—Phonetics: Language Families of the World.

Books recommended—

Dumville, B.—The Science of Speech (London University Tutorial Series).
Mazumdar, B. C.—History of Bengali Language, Chap. VI.
Chatterji, S. K.—A Brief Sketch of Bengali Phonetics.

Paper III.—The Languages of India.

Books recommended—

Grierson, Sir G. A.—Article in the Bulletin of the School of Oriental Studies, London, Vol. I, and the Linguistic Survey of India, Vol. I, Part I.

Note.—Students are also recommended to consult the following:—

Tucker, T. G.—Introduction to the Natural History of Language (Blackie).

(Honours Course.)

There shall be six papers in all:

Paper I.—Same as for the Pass Course, but in greater detail.

Books recommended (in addition to those for the Pass Course):

O. Jesperson—Language (Allen and Unwin); Article on "Philology" in the Encyclopædia Britannica (11th Ed.).

Paper II.—Same as for the Pass Course, but in greater detail.

Books recommended (in addition to those for the Pass Course):

G. Noel-Armfield—General Phonetics (Heffer, Cambridge); Article on "Accent" and "Phonetics" in the Encyclopædia Britannica (11th Ed.).

Paper III.—Same as for the Pass Course, but in greater detail.

Besides the books prescribed for the Pass Course, the students are expected to have a general acquaintance with the volumes of the Linguistic Survey of India dealing with the Indo-Aryan and Iranian Languages.

Paper IV.—Grammar of *one* of the following Languages treated comparatively and historically:

(A) English.—Books recommended: H. Sweet—New English Grammar (Oxford); H. C. Wyld—Historical Study of the Mother Tongue (Murray).
(B) Sanskrit.—Books recommended: A. Macdonnell—A Vedic Grammar for Students (Oxford), to be supplemented by Whitney's Sanskrit Grammar (Ginn).
(C) Pali.—Books recommended: E. Müller—Pali Grammar (Kegan Paul); Vidhusekhara Sastri—Pali Prakasa.
(D) Persian.—Books recommended: Platts and Ranking—A Persian Grammar (Oxford).

Paper V.—Texts illustrating the growth of the language chosen.

(A) English.—Old and Middle English. Recommended books: Wyatt—Old English Grammar (for reference only); Cook—First Book of Old English; H. Sweet—First and Second Middle English Primers; Wright—Elementary Grammar of Middle English (for reference only).
(B) Sanskrit.—Books recommended: Sanskrit (Vedic), and Pali-Prakrit.—Rigveda: Hymns, I 154; II 12; III 59; VII 49, 51, 63, 71, 86 (these are all to be found in Macdonnell's Vedic Reader); Woolner—Introduction to Prakrit: Extracts—1-8, 10, 11, 15, 19, 22-26, 28, 31, 32, 34, 35.

(C) Pali.—Sanskrit (Vedic and Classical), and Prakrit. Books recommended: Rigveda: Hymns, IV 51; X 44, 90, 129 (c) these are all to be found in Macdonnell's Vedic (Reader); Raghuvamsa, Canto IV; Vikramorvasi (Bombay Ed.); Woolner—Introduction to Prakrit (as in B).

(D) Persian.—Avesta, Old Persian and Pahlavi. Books recommended: Taraporewala—Selections from Avesta and Old Persian, I. Parts 1 and 2: the following two selections Yasna IX, Behistun Inscription, I; Pahlavi: Arda Viraf Nama, IV.

Paper VI.—A cognate or connected language (Easy texts including Elementary Grammar).

(A) With English: German or French.
German: Hauff—Die Karawane (Cambridge), first three stories.
French: Guy de Maupassant—Six contes (Cambridge), first three stories.

(B) With Sanskrit either Avesta and Old Persian or Greek.
Avesta: Yasna, IX Old Persian, Behistun Inscription, Col. I.
Greek:—Beresford and Douglas—A First Greek Reader (Blackie).

(C) With Pali:—Ancient Indian Vernacular Texts:
Bengali: Bauddha Gan O Doha: Selected Caryas:
Sri Krishna Kirttana—Selected portions.

(D) With Persian either—Sanskrit or Arabic.

Sanskrit: C. U. Matriculation Course (the following:—Hitopadesa 1st four stories—Nalopakhyana, verses 1-40.)

Arabic:—Thornton and Nicholson—"Elementary Arabic, First Reading Book."

B.A. AND B.Sc. EXAMINATIONS, 1933.

Anthropology.

(Pass.)

Paper I—Physical Anthropology and Ethnology.

Physical Anthropology.—Position of man in the Animal Kingdom—Origin and Evolution of Man—Probable time and place of Man's origin—Early types of Man—A brief outline of the principles of anthropometry.

Ethnology—Race-definition—relation to environment. Race-migration—Race-classification—A general survey of the racial history of mankind in Asia, Europe, Africa, America and Oceania.—A brief survey of Indian Ethnology.

Books recommended—

H. G. Fleure—Apes and Men.

A. C. Haddon—Races of Man.

Anderson—Peoples of India.

Paper II—Prehistoric Archæology and Cultural Anthropology.

Prehistoric Archæology.—A brief outline of the remains of man in the Palæolithic and the Neolithic times in Europe—Synchronization of the Asiatic finds—Racial types and culture in the copper, bronze and iron ages.

Cultural Anthropology.—Structure of Society—Marriage-Family—Kinship—Social organisation—Totemism—Growth of political institutions—Magico-religious beliefs—Animism——Folk-lore.

Orgin and development of the Utilitarian arts—Origin of Agriculture—Domestication of Animals—Weapons.

Books recommended—

Fleure—Hunters and Artists.

A. M. Tozzer—Social Origins and Social Continuities.

H. G. Fleure—Potters and Priests.

Paper III—Practical work (vide Syllabus).

(Honours.)

Paper I—Physical Anthropology.

Position of Man in the Animal Kingdom—Probable time and place of Man's origin—The ancestral tree of Man in the light of palæontological date—Early types of Man—Varieties of genus homo—Geographical distribution and social life of early Man.

Books recommended—

Huxley—Man's Place in Nature.

A. Keith—Ancient Types of Man.

Paper II—Ethnology.

Meaning and scope of Ethnology—Its relation to other science—Race—a general discussion—Race migration—Race classification—Racial history of mankind. Somatic characters of human race—The main cultural division in India or in any part of it.

Books recommended—

A. C. Haddon—Race of Man.

Pittard—Race and History.

Paper III—Prehistoric Archæology and Technology.

Chronology and classification—A brief outline of the remains of Man in Palæolithic and Neolithic times in Europe, and synchronization of the Asiatic finds—Racial types and cultures—in the Copper, Bronze and Iron ages—Transition from one type of culture into the other.

Technology—Hunting—Primitive agriculture—Domestications of animals.

Personal adornment—painting, tattooing, sacrification, mutilation deformation; jewellery, hairdressing and clothing.

Primitive habitations—Primitive warfare—Primitive travel by land and water.

Books recommended—

P. Mitra—Prehistoric India.

H. F. Clepland—Our Prehistoric Ancestors.

Paper IV—Social Anthropology.

Scope of Social Anthropology—Definitions of—family, clan, horde, moiety, tribe and nation.

Caste in India—Caste definition, origin and development—Caste formations—Caste and tribe—Caste and race.

Sex and Marriage—Origin and evolution of Marriage—Definition and criticism—Marriage and celibacy—Origin and development of exegamy—Endogamy and hypergamy, and their influence on the people of India—Various forms of marriage—Marriage ceremonies—Origin and development—Prenatal and post-natal ceremonies.

Family, kinship, and social organization—Family—origin and development—Chief types—Status of parents in the family—Sexual antagonism tabu—Couvade—typical instances—Magico-religious beliefs—Magic and its evolution—Its antiquity—Kinds of magic.

Animism—Definitions—Various theories—Relation between magic and religion—Its survivals in their higher forms of religion and mythology with special reference to India.

Totemism—Origin and development of totemism—Brief statement of the various theories—Totemism and magic—Totemism and animism.

Village organisation in India—Primitive village—Its origin and growth—Racial elements in the village communities—Various castes and tribes inhabiting the village—Village gods and godlings—Festivals—Village pastimes—Group solidarity—Growth of towns and cities—Village government—Law and justice.

Books recommended—

A. C. Haddon—Magic and Fetishism.

L. K. A. Iyer—Lectures on Ethnography.

W. H. R. Rivers—Social Organisation.

Paper V—Practical work in the laboratory (vide Syllabus).

Paper VI—Identification of stone implements and specimens of primitive handicrafts (vide Syllabus).

B. COM. EXAMINATION, 1933.

(Compulsory Paper.)

General Economics.

Selingman—Principles of Economics.
Carver—Principles of Economics.

Indian Economics.

P. N. Banerjea—Introduction to the Study of Indian Economics
Jevons—Money, Banking and Exchange in India.
Baden Powell—Land Revenue in British India.
Mathai—Co-operation in India.
Coyajee—Indian monetary System.

Accountancy.

Cropper—Book-keeping and Accounts.
Fieldhouse—Students' Complete Commercial Bookkeeping.
S. R. Batliboi—Practical Accounting.

Indian and Foreign Trade.

Wolfe—Theory and Practice of International Commerce.
Cotton—Handbook of Commercial Information for India.
Miller—Foreign Exchange Market.
Review of the Trade (latest issue).

Business Organisation including Commercial Correspondence.

Grebby—Modern Business Training and the Methods and Machinery of Business.
Davar—Business Organisation.
Gardner—Effective Business Letters.
Stephenson—Principles and Practice of Commerce.

Commercial Law.

Davar—Mercantile Law.
Stevens—Mercantile Law.
Indian Contract Act.

Economic Geography.

Brown—Principles of Economic Geography.
Taylor—Businessman's Geography.
A School Economic Atlas by Bartholomew, with Introduction by Lyde (Revised edition).

(Optional Papers.)

Advanced Accountancy and Auditing.

Carter—Advanced Accounts.
Spicer and Peglar—Practical Auditing.
De Paula—Principles of Auditing.

BANKING AND CURRENCY.

Weston -Banking and Currency (University Tutorial Press).
Withers—Meaning of Money.
Joshi—Money and Money Market in India.
Tannan -Banking Law and Practice in India.
Coyajee- Indian monetary System.

PUBLIC ADMINISTRATIONS.

Jenks—British Empire.
D. N. Banerjee -Indian Constitution.
Report of the sub-committees of the Round Table conference.
Report of Simon commission.
Keith—Dominion Autonomy in practice.

PUBLIC FINANCE.

Dalton—Public Finance.
Report of the Taxation Enquiry Committee (Chapters VI to IX).
Wattal -Financial Administration in British India.
Hilton Young -The System of National Finance.

AGRICULTURAL ECONOMICS.

Carvar—Introduction to Rural Economics.
Wolff -Co-operation in India.
Report of the Royal Commission on Agriculture (Chapters I, II, IV, XI).
Review of Agricultural Operations in India (latest issue).

ECONOMICS OF TRANSPORT.

Acworth -Elements of Railway Economics.
Acworth Committee's Report.
S. C. Ghosh - Indian Railway Economics.
Mehta, N. B. -Indian Railway rates and development.
Douglas Knoop Outlines of Railway Economics.
T. B. Hare- British Railway Operation.

INDUSTRIAL ORGANISATION.

Robertson -Control of Industry.
Hobson—Evolution of Modern Capitalism.
Report of the Indian Industrial Commission (1916-18).
A Study of Jute, Cotton and Iron Industries in India.
Large Industrial Establishments in India (latest edition).
Students are recommended to consult Reports and Government Publications.

TARIFFS.

Higginson—Tariffs at Work.
Fisk—International Commercial Policies.
Banerjea, P. N.- Fiscal Policy in India.
Report of the Indian Fiscal Commission.
Reports of the Tariff Board on steel and Cotton Industries.

STATISTICS.

King--Elements of Statistics.
Bowley—Elementary Manual of Statistics.
Boddington—Statistics and their Application to Commerce.

ECONOMIC HISTORY.

Gibbins—Industry in England.
Gadgil—Industrial Evolution in India.
Kydd—Factory Legislation in India.

For reference—

J. C. Sinha—Economic Annals of Bengal.
R. C. Dutt—India under Early British Rule.
R. C. Dutt—India in the Victorian Age.

The following vernaculars are specified for the present for the B. Com. Examination Composition Paper: --

(1) Hindi. (2) Bengali. (3) Urdu. (4) Uriya. (5) Assamese. (6) Tamil. (7) Telugu. (8) Canarese. (9) Malayalam. (10) Gujrati. (11) Marhathi. (12) French. (13) German.

M.A. EXAMINATION, 1933.

English.

Common Papers for Groups A and B.

Paper I.

1. (*a*) *General History of English Literature.*

The following outlines, not meant to be exhaustive, are given as an indication of the topics and authors requiring particular attention:—

I. Old English Literature.

The Anglo-Saxon Conquest: Racial Characteristics.
Old English Heroic Poetry; *Beowulf.*
Old English Personal Poetry.
Conversion of the Anglo-Saxons: its influence on literature. Cynewulf and his school.
Old English Prose. Alfred. *Anglo-Saxon Chronicle.*
Decay of Old English Literature: Later heroic verse.

II. Middle English Literature.

The influence of the Norman Conquest.
Main Currents in Middle English Literature.
Old Traditions. Mediaeval Christianity. Scholastic Philosophy. Norman Chivalry. Latin, Celtic and Saracen influences. French influence.
Characteristic works: Geoffrey's Historia, Orm's *Ormulum*, Layamon's *Brut, Ancren Riwle, The Owl and the Nightingale.*
The Metrical Romance. Arthurian Legend. The Allegory. Fourteenth Century Alliterative Verse. *Piers the plowman.*
Chaucer and his school. Stagnation after Chaucer, Scottish Poets.
Origins of the English *Drama.*
Middle English Lyrics. Ballads.
Origins of English Prose. Wycliffe. Mandeville. Malory.

III. Elizabethan Literature.

The Renaissance.
The Reformation. Translations of the Bible.
Classical and continental influences. The Translations. New Prose and poetic forms. The Pastoral Convention.
Poetry. Wyatt and Surrey, Tottel's *Miscellany.* Elizabethan *Miscellanies* and *Song books.* Sonnets. Satire. *A Mirror for Magistrates.* Spenser. Metaphysical Poetry. Donne. Caroline Poetry. Milton.
Prose: Chronicles and Travels. Pamphlets. Prose Romances and Novellas. Sidney. Lyly. Euphuism. Bacon. The Theologians. Hooker Jeremy Taylor. Sir Thomas Browne. Burton. Milton.
The Drama. First Regular Tragedy and Comedy. Classical Influence. The Elizabethan Stage.
Shakespeare's predecessors. Lyly. Marlowe.
Shakespeare.
Elizabethan Drama. Ben Jonson. Webster. Beaumont and Fletcher. Decay of Elizabethan Drama. Ford.

IV. Restoration and 18th Century Literature.

French Influence. Pseudo-Classicism.
Social Changes. Condition of Authorship.
Poetry: *Satiric* and *Didactic Poetry.* The Heroic couplet.
Dryden. Samuel Butler. Pope Gay.
Prose. Rationalistic Movement. The Royal Society.
Criticism.
The Periodical and the Essay.
The Novel.
Letters and Diaries. History.
John Bunyan. Locke. Dryden. Addison. Steele. Swift. Defoe. Richardson. Fielding. Smollett. Sterne. Goldsmith.
Johnson. Burke. Hume. Gibbon. Boswell.
The Drama: Heroic Tragedy. Dryden. Otway.
Restoration and 18th Century Comedy. Congreve. Sheridan. Goldsmith.

V. Romantic Revival.

Return to Nature. Return to the Past. Renascence of Wonder.
The French Revolution.
The Transcendental Movement.
Medievalism.
Changes in Poetic forms. Lyrical Revival.
Precursors; Thomson. Gray. Collins. Cowper. Blake. Burns. Percy's *Reliques.*
Poetry: Scott Wordsworth. Coleridge. Byron. Shelley. Keats.
Prose: *Criticism.* Old and New. The Reviewers. Coleridge. Hazlitt.
The Essay: Lamb, De Quincey. Landor.
The Novel: Romances of Terror and Mystery. The Historical Novel. Scott. Austen.

VI. Victorian Literature.

The Democratic Movement. Utilitarian Movement: Aesthetic and Spiritual Reactions. *The Scientific Movement.* Conflict between Science and Religion.
Poetry: Tennyson. Browning Mrs. Browning. The Pre-Raphaelites. Matthew Arnold. Swinburne.
Prose: Carlyle. Ruskin. *The Oxford Movement.* Newman J. S. Mill. Macaulay. Froude. Matthew Arnold.
The Novel: Dickensons. Thackery. Charlotte Bronte. George Elliot Stevenson. Meredith. Hardy.

VII. Post-Victorian Literature.

The Propagandist Note. Continental Influences.
Poetry: The Victorian Tradition. The Celtic Movement Yeats. Kipling.
The Novel: H. G. Wells. Conrad. Arnold Bennet.
The Drama: Bernard Shaw. Galsworthy.
The Essay: *Criticism Journalism.*
The following text-books are recommended for study as indicating the standard of knowledge to be expected from the candidates:—

(*a*) For Preliminary reading:

A Primer of English Literature by Stopford Brooke (Latest Ed.).

(*b*) For General knowledge:—

A Short History of English Literature (Saintsbury).
A History of English Literature (Compton Rickett).
A History of English Literature (Legonis and Cazamion).

(*c*) For a more detailed study of Periods and Movements:—

Handbooks of English Literature (The Age Series), as edited by Prof. Hales.
History of English Literature in 6 Vols. (Published by Macmillan & Co.).
English Literature during the last Half Century (J. W. Cunliffe).
English Literature, 1880-1895 (Kennedy).

(*d*) For Consultation and reference—

The Cambridge History of English Literature.
A History of English Poetry (Courthope).
The Channels of English Literature (published by J. M. Dent & Sons).

(*e*) For a first-hand study of the more important authors:—

Ward's English Poets, 5 Vols.
Craik's English Prose, 5 Vols.
Mermaid Series of English Plays (Ed Havelock Ellis).
Oxford Treasury of Prose and Verse.

1(b) History of the English Language (for "A" Group students).

The Indo-European Speech—Family—The Germanic Branch—Place of English in this Branch—Periods in the History of the English Language with their characteristics—Old English, Middle English and New or Modern English.

Modern English Sounds and Orthography—Outline History of the English Sounds and Inflexions in the Old, Middle and New English periods.

The Vocabulary of English—The Native Element—The Foreign Elements—English Semantics.

Books prescribed—

O. F. Emerson—The History of the English Language (MacMillan).

Greenough and Kitteridge—Words and their Ways in English Speech (MacMillan).

Or,

1(b) Principles of Criticism (for "B" Group students).

Literature as interpretation of life—Types of Literature; The Epic; The lyric; The Drama; The Novel; Minor types—Form and Matter of literature—Schools of Criticism: Classicism and Romanticism—Art and Morality Literature and Science—Personality in Literature—Literature and Environment.

Books prescribed—

Hudson—Introduction to the Study of Literature.

Worsfold—Judgment in Literature.

Paper II—Drama.

Shakespeare. Othello; King Lear; Much Ado About Nothing.

Ben Jonson. Every Man in his Humour.

Otway. Venice Preserved.

Paper III—Poetry.

Chaucer—Prologue to the Canterbury Tales.

17th Century verse (Massingham—G.T.S.)—Select pieces.

(All the poems of Joseph Beaumont, Alexander Brome, Richard Brome, Robert Burton, Thomas Carew, Abraham Cowley, Richard Crashaw, John Donne, John Fletcher, Fulke Greville (Lord Brooke), William Habington, George Herbert, Richard Lovelace, Andrew Marvell, Francis Quarles, Sir John Suckling, Thomas Traherne, Henry Vaughan, James Shirley, Edmund Waller, Izaak Walton, George Wither; and the anonymous pieces numbered 327, 329, 337, 369, 376, 381, 382, 385, 391, 396.)

Dryden. Absalom and Achitophel.

Browning. Men and Women (as in the Oxford edition of Browning's Works).

Binyon. Golden Treasury of Modern Lyrics, Book II.

Paper IV—Prose.

Milton—Areopagitica.

Burke—French Revolution.

Carlyle—Sartor Resartus.

Pater—Appreciations.

GROUP A.

Papers V, VI and VII.

Three papers to be chosen out of the following five of which at least two shall be from the first three.

1(a) Selected period of Drama—Elizabethan Drama.

The undermentioned authors are recommended for special study in their chief works as specified below; but candidates will not be expected to show a detailed knowledge of the texts named:—

Marlowe—Dr. Faustus, Edward II, Tamburlaine.

Kyd—The Spanish Tragedy.

Shakespeare—Romeo and Juliet, Richard III, Julius Caesar, Lear, Othello, Hamlet, As You Like It, Winter's Tale, Henry IV.

Ben Jonson—Every Man in His Humour, Volpone, Sejanus, The Alchemist.

Beaumont and Fletcher—Philaster, The Knight of the Burning Pestle.

Webster—Duchess of Malfi.

Dekkar—The Shoemaker's Holiday.

Ford—The Broken Heart.

(b) Selected Period of Poetry.

Early Nineteenth Century Poetry (1798-1832).

Crabbe—Selections (Muse's Library).

Wordsworth—Prelude, Books I, II, XI, XII, XIII; Excursion, Book I; Selections (Grasmere Edition).

Coleridge—Selections by Stopford A. Brooke (Golden Book of Coleridge. Dent). Byron—Vision of Judgment; Siege of Corinth Manfred Childe Harold's Pilgrimage, Don Juan (Books I and III).

Shelley—Prometheus Unbound; Alastor, Epipsychidion; The Witch of Atalos.

Keats—Hyperion; Eve of St. Agnes; Lamia, Isabella, Odes, Adonais, selections (MacMillan, English literature series).

Golden Treasury of Songs and Lyrics (Palgrave), Book IV.

Selections from English Poets, edited by Ward, Vol. IV.

(c) Selected period of Prose.

Victorian Prose, 1835-1870.

The undermentioned authors are recommended for special study in their chief works as specified below; but candidates will not be expected to show a detailed knowledge of the texts named:—

Carlyle—Essays, Critical and Miscellaneous—Scott, Heroes and Hero Worship; Past and Present.

Ruskin—Readings from Modern Painters (1843) (Nelson's Classics, extracts from Volumes II, III and IV), Unto this Last; The Crown of Wild Olive.

Mathew Arnold—Essays on Criticism, 1st Series; Culture and Anarchy.

Macaulay—Historical and Critical Essays—Southey's Edition of the Pilgrim's Progress; Boswell's Life of Johnson; William Pitt; Earl of Chatham (two Essays).

Newman—Selections from Newman (Longmans, Green and Co.).

Dickens—Pickwick Papers; David Copperfield; A Tale of Two Cities.

Thackeray—Vanity Fair; Newcomes; Esmond.

George Eliot—Adam Bede; Mill on the Floss; Romola.

C. Bronte—Jane Eyre.

Mill—Utilitarianism.

(d) Foreign Classics in Translation to be studied in relation to English Literature.

The undermentioned authors are recommended for special study in their chief works as specified below; but candidates will not be expected to show a detailed knowledge of the texts named:—

Aeschylus—(1) Prometheus Bound, (2) Agamemnon, (3) Choephorae, (4) Eumenides.

Sophocles—(5) Oedipus the King, (6) Oedipus at Colonus, (7) Antigone, (8) Ajax, (9) Electra.

Euripides—(10) Alcestis, (11) Medea, (12) Hippolytus, (13) Iphigenia in Taurus, (14) Electra, (15) Orestes.

Seneca—(16) Agamemnon, (17) Medea.

(e) History and Principles of Criticism (including a general study of literary types).

For reference only—

Saintsbury—History of Criticism (in one volume).

Wylie—The Evolution of English Criticism.

Upham—The Typical Forms of English Literature.

Worsfold—Principles of Criticism.

Hudson—An Introduction to the Study of Literature.

Books prescribed—

Plato—On Poetic Inspiration (Everyman) Ion, Symposium, Phœdras.

Aristotle—Poetics Byewater with an introduction by Gibbert, Murray.

Sydney—An Apologie for Poetry.

Dryden—Essay of Dramatic Poesy, Prefaces on Fables.

Wordsworth—Prefaces and Appendices (Oxford Edition).

Coleridge—Biographia Literaria (excluding chapters 5-9, and 12).

Shelley—Defence of Poetry.

Arnold—Essays in Criticism (Selected Essays), The Study of Poetry, Milton, Wordsworth—The Function of Criticism at the present time.

Oscar Wilde—Intentions.

Croce—Æsthetics (Part I).

GROUP B.

Papers V, VI and VII.

Three out of the following five courses of which at least two must be from the first three:—

(a) Old English and Grammar.

Sweet—Anglo-Saxon Reader (selected texts).
Sievers and Cook—Old English Grammar (Ginn).

(b) Middle English.

Selections from Chaucer and Langland.
Morris and Skeat's Selections from Early English Literature, Vols. I and II (selected texts).

(c) Teutonic Philology.

Germanic Philology by R. Lowe, tr. by J. D. Jones (George Allen & Co., London).
Wright—Old English Grammar (Oxford U. P.).
H. C. Wyld—A Short History of English (Murray).
Morris—Outlines of English Accidence (MacMillan).
Kellner—Historical English Syntax (MacMillan).
Greenough and Kitteridge—Words and their Ways in the English Speech.

For reference—

Skeat—Principles of English Etymology, 2 Vols. (Oxford).
Ohiphant—Old and Middle English, Modern English (MacMillan).

(d) Early German and French Classics.

(i) The Poetic Edda-Bellows (American Scandinivian Foundations).

(ii) The Saga of the Volsungs—Tr. Morris (Scott Library).

(iii) Nibelongenlied—Tr. Margaret Armour (Everyman).

(iv) Chanson de Roland—Tr. Scott Moncrief (Chapman and Hall).

(v) Aucassin and Nicolette, with other Medieval Stories—Tr. Eugene Mason (Everyman).

(vi) Crestien de Troyes—Eric and Enid, etc.—Tr. . Eugene Mason (Everyman).

(vii) French Medieval Romances—Tr. Eugene Mason (Everyman).

For reference—

O. Jiriczek—Northern Hero Legends (Temple Cyclopaedic Primers).
Kaufmann—Northern Mythology (Temple Cyclopaedic Primers).
Craigie—Icelandic Sagas (Cambridge Manuals).
Gaston Paris—Medieval French Lit. (Temple Cyclopaedic Primers).
W. P. Ker—Epic Romance.
Chadwick—The Heroic Age.
W. P. Ker—The Dark Ages (Periods of Lit. Series—Blackwood).
Saintsbury—The Flourishing of Romance and Allegory (Periods of Lit. Series—Blackwood).

(e)

(i) Wright (Gothic)—Grammar of the Gothic Language with selected texts (Oxford).

(ii) Sweet (Old Norse)—Icelandic Primer with selected texts.

(iii) Wright (Old High German)—Old High German Primer (Oxford).

Paper VIII.

Essay or Essays on subjects connected with the course.

"In one of the first three papers (*a*), (*b*), and (*c*) in Group A and of the first two (*a*) and (*b*) in Group B, the method of teaching and the questions set shall be such that candidates may concern themselves either with literature or with life and thought."

Sanskrit.

The course shall include the following:—

(The books prescribed for the first four papers are common to all the groups.)

Paper I.

(*a*) Ashtak I of Rig-Veda, with Sayana's commentary thereon.
(*b*) Sayana's introduction to his commentary on the Rig-Veda.

Paper II.

Siddhanta Kaumudi (whole).

Paper III.

(*a*) and (*b*) Elements of Comparative Philology with special reference to the Indo-Iranian Languages and the growth of the Prakritic dialects.

The following books are recommended:—

Macdonell, A. A.—Vedic Grammar for Students (Oxford).
*Uhlenbeck, C. C.—A Manual of Sanskrit Phonetics (Luzac).
*Gune—Introduction to Comparative Philology (Poona).
*Candidates are required to possess a thorough acquaintance with the books marked with an asterisk.

For reference only—

Whitney—Sanskrit Grammar.
Dr. Prabhatchandra Chakravarti—Linguistic Speculations of the Hindus.
(*c*) Sabda-Sakti-Prakasika—Karikas Nos. 2, 3, 4, 12-14, 16-18, 20, 29, 31, 33, 54, 56, 58, 60, 61, 66, 67, and 95.

Paper IV.

Two essays—(*a*) dealing with some subject connected with the history of Sanskrit literature generally; (*b*) dealing with some subject connected with the history of the special department covered by the group taken up.

Papers V, VI, VII and VIII.

One of the following groups to be selected by the candidates:—

A.—Literature

Paper V.—(*a*) Poetry text:—

Naishadha Charita—Cantos I and XVII.
Kamandakiya Nitisara—Chapters 8, 9, 10 and 11 (pages 37-62). (Jivananda's edition).
Sukra Nitisara—Book IV up to the end of Section V.
Mahabharata—Santiparva, Rajdharma, Chapters 56-60, 68, 69, 86, 88 (Pratap Ray's edition).
Sisupalavadha—Cantos 14, 15, with Mallinatha's Commentary.
(*b*) Translation from English to Sanskrit.

Paper VI—(*a*) Drama Texts, Vikramorvasi, Mrichchhakatika, Venisamhara, Mahaviracharita, Malati Madhaba, Vararuchi's Prakrita Prakasa, as is necessary for the appreciation of the Prakrit passages.

(*b*) Translation from English into Sanskrit.

Paper VII.—(*a*) Prose Text; Subandhu's Vasabdatta, Harshacharita, Chapters 5 and 6.

(*b*) Unseen passages in Sanskrit Prose for translation into English.

Paper VIII.—Rhetoric and Prosody, namely, Kavyaprakasa, Ekavali Sarasvati-kanthabharana, Sahitya-Darpana, and Chhando-manjari.

(*b*) Unseen passages in Sanskrit Poetry for translation into English.

B.—Vedas.

Paper V.—Yaska's Nirukta and Pingala's Chhandasutras with Halyayudha's Vritti; Pratisakhya of the Rig-Veda with the commentary of Uvata.

Paper VI.—(*a*) Aitareya Brahmana with Sayana's commentary.

(*b*) Simple unseen passages in Vedic Sanskrit for translation into classical Sanskrit.

The interpretation of any recognised Indian School will be accepted.

Paper VII.—(*a*) Brihadaranyaka Upanishad, Chapters III and IV; Chhandogya, Chapters V, VI, VII and VIII with Sankarabhashya.

(*b*) Simple Sanskrit unseen passages from any Upanishad for translation into English.

Paper VIII.—(*a*) Grihya-Sutra—Gobhila with commentary.

(*b*) Translation from English into Sanskrit.

C.—Mimamsa and Smriti.

Paper V.—(*a*) Mimamsa-Sutra with Savara Bhashya, first three Chapters.

(*b*) Simple unseen Sanskrit passages from any treatise or commentary on the Mimamsa Philosophy, such as the Sloka-Varttika and the Tantra Varttika for translation into English.

For reference only—

Dr. Pasupatinath Sastri—Introduction to the Purva Mimamsa.

Paper VI.—(*a*) Jaiminiya Nyayamalavistara and Mimamsa Nyayprakasa.

(*b*) Simple unseen Sanskrit passages from any treatise or commentary on the Mimamsa Philosophy, such as the Mimamsa-Balaprakasa and the Tuptika for translation into English.

Paper VII.—(*a*) Manu Samhita with Kulluka's Commentary.

Dharma-Sutras of Apastamba and Gautama with Haradatt's Commentary.

(*b*) Grihya-Sutra—Gobhila.

Paper VIII.—(*a*) Yajnavalkya-Samhita with Vijnanesvara's Mitakshara. Parasar's Institutes with Madhava's Commentary.

(*b*) Translation from English into Sanskrit.

D.—Vedanta.

Paper V.—(*a*) Vedantasara (Jacob's edition), Panchadasi, Vedanta Paribhasha, Hastamalaka (with commentary), and Siddhantalesa.

(*b*) Simple unseen Sanskrit passages from any work on Vedanta Philosophy such as the Vivaranaprameya-Sangraha for translation into English.

Paper VI.—Vedanta-Sutra with Sankara Bhashya.

(*b*) Translation from English into Sanskrit.

Paper VII.—(*a*) Sribhashya, Chapter I, Part I.

(*b*) Advaita-Brahma-Siddhi.

Paper VIII.—(*a*) Bhagavadgita with Sankarabhashya: Chhandogya-Upanishad, Chapter VI; Brihadaranyaka, Chapters III, VI; Katha and Mandukya Upanishads; with Sankara's Commentary.

(*b*) Passages for translation into English from the Anubhashya and the Saivabhashya.

E.—Sankhya and Yoga.

Paper V.—(*a*) Sankhya-Sutras of Kapila with Vritti of Aniruddha, Sankhya-Karika of Isvara-krishna with Bhashya of Gaudapada.

(*b*) Simple unseen Sanskrit passages from any treatise or commentary on the Sankhya Philosophy for translation into Sanskrit.

Paper VI.—(*a*) Sankhya Pravachana-Bhashya. Sankhya-Sāra and Sankhya Tattvakaumudi.

(*b*) Translation from English into Sanskrit.

Paper VII.—(*a*) Yoga-Sutras of Patanjali with Bhashya of Vyasa and Vritti of Bhoja, Yoga-Varttika of Vijnana Bhikshu.

(*b*) Simple unseen Sanskrit passages from any treatise or Commentary on the Yoga Philosophy for translation into English.

Paper VIII.—(*a*) Yogavasistha, Chapter on Vairagyaprakarana, Sarvadarsana Samgraha.

(*b*) Translation from English into Sanskrit.

F.—Nyaya and Vaiseshika.

Paper V.—(*a*) Nyaya-Sutras of Gautama with Bhashya of Vatsyayana, Varttika of Udyotakara and Vritti of Visvanatha.

(*b*) Simple unseen Sanskrit passages from any treatise or Commentary on Nyaya Philosophy for translation into English.

Paper VI.—(*a*) Nayamanjari of Jayanta Bhatta; Khandanakhanda-khadya of Sriharsha, Chapter I. Before the topic (Adwaita Kimmanam).

(*b*) Translation from English into Sanskrit.

Paper VII.—(*a*) Bhashaparichchheda with Siddhantamuktavali; Kusumanjali of Udayanacharyya with Commentary of Ruchidatta and gloss of Vardhamana.

(*b*) Translation from English into Sanskrit.

Paper VIII.—(*a*) Vaiseshika Sutras of Kanada, with Bhashya of Prasastapada; Nyayakandali of Sridhara, and Vritti of Jayanarayana; Saptapadarthi of Sivaditya, with Commentary of Yatindra Madhava.

(*b*) Simple unseen Sanskrit passages from any treatise or commentary on Vaiseshika Philosophy for translation into English.

G.—General Philosophy.

Paper V.—(*a*) Sankhya Sutras of Kapila with Vritti of Aniruddha, Sankhyatattva-Kaumudi, Yoga-Sutras of Patanjali with the Bhashya of Vyasa and Vritti of Bhoja.

(*b*) Simple unseen Sanskrit passages from any work on Philosophy for translation into English.

Paper VI.—(*a*) Nyaya Sutras of Gautama with Bhashya of Vatsyayana and Vritti of Visvanatha, Vaiseshika Sutras of Kanada with Bhashya of Prasastapada, and Nyaya-kandali of Sridhara.

(*b*) Translation from English into Sanskrit.

Paper VII.—(*a*) Vedantasara (Jacob's edition) Bhagavadgita with Sankarabhashya. Vedanta Sutra with Sankara's Commentary, Chapter I, Parts I and IV; Chapter II, Part II.

(*b*) Translation from English into Sanskrit.

Paper VIII.—(*a*) Nyayaratnamala of Parthasarathi Misra, Mimamsa Nyaya-Prakasa of Apodeva. Upanishads—Isa, Kena, Katha, Prasna, Munda, Mandukya and Svetasvetara, with Sankara's Commentary.

(*b*) Simple unseen Sanskrit passages from any work of Philosophy for translation into English.

II.—Prakrit.

Paper V.—(*a*) Prasna Vyakarana, Vipakasutra.

(*b*) Translation from English into Sanskrit (or Prakrit at the option of the candidate).

Paper VI.—(*a*) Prakrit portions of the following dramas:—
Sakuntala, Vikramorvasi, Malavikagnimitra, Uttaracharita, Malatimadhava, Mahaviracharita, Mrichchhakatika, Mudrarakshasa, Ratnavali, Karpuramanjari, Venisamhara.

(*b*) Translation from Sanskrit into Prakrit.

Paper VII.—(*a*) Setubandha, Gaudavaho Kumarapalacharita, together with a general knowledge of Prakrita Paingala.

(*b*) Simple unseen passages in Prakrit for translation into English.

Paper VIII.—(*a*) Prakrit Grammar as in Vararuchi's Prakrita-Prakasa (Cowell), Chanda's Prakrita Lakshana (Hoernel), Hemchandra (Pischel).

Candidates are also expected to be familiar with the substances of Hoernel's Grammar of the Gaudian languages.

(*b*) Simple unseen passages in Prakrit for translation into Sanskrit.

I.—Epigraphy and History.

Paper V.—(*a*) Rajatarangini and its continuation, with Stein's introduction and commentary.

(*b*) Unseen passages in Sanskrit for translation into English.

Paper VI.—Inscriptions of Asoka.

(*b*) Early Indian Alphabets.

Paper VII—

A Selections from Epigraphia Indica: (A thorough knowledge of the Scrips of A and B will be expected).

(1) Junagadh Rock inscription of Rudradaman of the year 72 (Vol. VIII, No. 6).
(2) Hirahadagalli grant of the Pallava King Sivaskandavarman (Vol. I, No. 1).
(3) Banskhera Plate of Harsha (Vol. IV, No. 29).
(4) Ganjam plates of the time of Sasankaraja (Vol. VI, No. 14).
(5) Khalimpur plate of Dharmapaladeva (Vol. IV, No. 34).
(6) Belava copper plate of Bhojavarmadeva (Vol. XII, No. 8).
(7) Rampal plate of Srichandradeva (Vol. XII, No. 18).
(8) The five Damodarpur copper plates of the Gupta period (Vol. XV, No. 7; see also Vol. XVII, No. 13A).
(9) Karmadanda inscription of the reign of Kumaragupta (Vol. X, No. 15).
(10) Barrackpore grant of Vijayasena (Vol. XV, No. 15).
(11) Ghasundi Stone Inscription (Vol. XVI, No. 6).
(12) Haraha Inscription of Isanavarman (Vol. XIV, No. 5).
(13) Aihole inscription of Pulikesin II (Vol. VI, No. 1).
(14) Paithan plates of Govinda III (Vol. III, No. 17).
(15) Tirumalai Rock inscription of Rajendrachola I, Vol. IX. No. 31 (translation only).
(16) Nasik Prasasti of Gautami-putra Satakarni.
(17) Gadag Inscription of Bhillama (Vol. III, No. 30).
(18) Gadag Inscription of Vira-Ballala II (Vol. VI, No. 10).
(19) Saheth Naheth plate of Govinda Chandra (Vol. XI, No. 3).
(20) Partabgarh Inscription of Mahendrapala II (Vol. XIV, No. 13).
(21) Poona plates of Prabhavati (Vol. XV, No. 4).
(22) Gwalior Inscription of Bhojadeva (Vol. XVIII, No. 13).
(23) Udayambakam Grant of Krishnadeva Raya (Vol. XIV, No. 12).

B. Fleet. Corpus Inscription Indicarum (Vol. III, Nos. 1, 5, 6, 10, 11, 13-20, 32-37).

C. Prachina-Lekha-Mala—

Sangli Plates of Govinda IV (No. 6).
Bhagalpur Plate of Narayanpal (No. 29).
Ilichpur grant of Pravarasena II (No. 85).
Baidyanath Prachasti (No. 95).
Bilhari Inscription (No. 104).
Deopara Inscription of Vijaysen (No. 105).

Paper VIII.—(*a*) Ancient Geography of India.

The following books are recommended:—

Cambridge History of India, Vol. I (Chapter on the Rig Vedic and later Samhita periods).

Cunningham—Ancient Geography of India.

Rajasekhara—Kavya Mimamsa (Desabibhaga Section).

Pargiter—Translation of the Markandeya Purana (Bhuvanakosha only).

(*b*) Translation from English into Sanskrit.

Pali.

Compulsory Papers.

Paper I.

(*a*) Dīgha Nikāya—

Brahmajāla-Suttanta.
Sāmaññaphala-Sutta.
Siṅgālovāda-Suttanta.
Ambaṭṭha-Sutta.

(*b*) Majjhima Nikāya—Suttas 1-15.

(*c*) Saṁyutta Nikāya—Devata, Devaputta and Kosala Saṁyuttas.

(*d*) Aṅguttara Nikāya—Pañcakanipāta, Vaggas 1-8.

N. B.—Candidates will be required to be acquainted with the following Suttas; Cakkavattisīhanāda Sutta (D.N.), Assalāyana Sutta (M.N.).

Paper II.

(*a*) Mahāvagga of the Vinaya Piṭaka, pages 1-156 (Oldenberg's Edition).

(*b*) Bhikkhu-Pātimokkha—(Edited by Vidhushekhar Sastri).

(*c*) Vidyabhushan's translation of So-sor-thar-pa (Tibetan Pātimokkṣha) Bibliothica Indica series.

(*d*) The Prātimokṣha of the Sārvastivādin sect (Edited by L. Finot, Societe Asiatique).

Paper III.

Vuttodaya, Ed. Silakkhanda (Nirnaya Sagar Press, Bombay).
Kaccāyana—(Edited by Vidyabhusana).
Vararuci—Prākrita Prakaśa (Edited by Basantakumar Chatterjee).
Muller—Pali Grammar.
Woolner—Introduction to Prakrit.
Gune—Comparative Philology (Poona).

For reference only—

Barua and Mitra—Prakrit Dhammapada.
Geiger—Pali Literature and Sprache.
S. K. Chatterji—Origin and Development of the Bengali Language (Introduction only).
Chakrabarty, P. C.—Languistic Speculations of the Hindus (Sanskrit and Prakrit).

N. B.—The course in Pali and Prakrit philology includes Indo-European family of languages—the Aryan Branch. History of Sanskrit and Prakrit dialects—Development of Pali sounds and inflections—Pali with reference to Sanskrit and Indo-European.

Paper IV.

Rhys Davids—Buddhist India.
Kern—Manual of Indian Buddhism.
Early History of the Spread of Buddhism and the Buddhist Schools.
N. Dutt—Some Aspects of Mahayana in relation to Hinayana (Select Chapters).
Mrs. Rhys Davids—Buddhism.
Inscriptions of Asoka (in translation).
Thomas, E. J.—Life of the Buddha.
Eliot—Hinduism and Buddhism, Vols. II and III.
Mabel Bode—Pali Literature in Burma.
Raychaudhuri, H. C.—Political History of Ancient India (2nd Ed.—from Bimbisara to Kanishka).

The following books are recommended:—

(1) Hoernle—Manuscript Remains of Buddhist Literature found in Eastern Turkestan, Vol. I (translation and notes only).
(2) N. P. Chakravarti—India and Central Asia.
(3) P. C. Bagchi—India and China.
(4) Law—Life and Work of Buddhaghosa.

GROUP A.—LITERATURE.

Paper V.

(*a*) Jātakas and Legends of the Buddha forming the literary basis of the Barhut sculptures.
(*b*) Rhys Davids—Buddhist Birth-stories (Introduction only).

For reference only—
Petavatthu and Vimānavatthu.

Paper VI.

Thera and Theri-gatha, 1st half of each with Commentary.
Sutta Nipata (Bapat's edition, excluding the Pārāyana Vagga).
Visuddhimagga (select portions).
Milindapañha (pages 90-239), (Trenckner's edition).

Paper VII.

1. Inscriptions of Asoka (in the original).
2. Barhut Inscriptions (Barua and Sinha).
3. Sañchi Stūpa Inscriptions (Epigraphia Indica, Vol. II).
4. Brahmi Inscriptions in the Udayagiri and Khandagiri Caves (Barua's edition).
5. Brahmi Inscriptions on the Bodh-Gaya Stone-railing (Barua's edition in the Indian Historical Quarterly, Vol. VI, No. 1).

Paper VIII.

Essays and Unseens.

GROUP B.—PHILOSOPHY.

Paper V.

Dhammasañgani.
Dhātukathā (P. T. S.)
Atthasālinī (P. T. S.), pages 1-136.
Vibhanga (P. T. S.), pages 1-100.

Paper VI.

Netti-Pakarana
Abhidhammâttha-Sangaha.
Abhidhammavatara.

Paper VII.

Kathāvatthu (P. T. S.), Vol. I, pages 1-103, with Commentary.
Dukapatthana.

Paper VIII.

Essays and Unseens.

GROUP C.—EPIGRAPHY AND HISTORY.

Paper V.

Mahāvaṁsa (Geiger's edition).
Sāsanavamsa (P. T. S. edition).

Paper VI.

Inscriptions of Asoka (in the original).
Inscriptions of Dasaratha.
Piprahwa Vase Inscription.
Sohgaura Copper Plate Inscription.

Paper VII.

Old Brahmi Inscriptions in the Udayagiri and Khandagiri Caves (Barua's edition).
Inscriptions of the Scythian and Satavahana Dynasties.

Inscriptions of the Imperial Guptas:—

(1) Allahabad Pillar Inscription of Samudra-Gupta.
(2) Sanchi and Udaygiri Inscriptions of Chandra-Gupta, II.
(3) Bilsad Mankuwar Kanamdande and Dhanaidaha Inscriptions of Kumara-Gupta, I.
(4) Bhitari, Junagad, Kahaum and Indore Inscriptions of Skanda-Gupta.
(5) The Damodarpur Plates.
(6) The Mandasore Inscriptions of Kumara-Gupta and Vandhu Varma.
(7) Bodh-Gaya Inscriptions of Mahanāman.

Paper VIII.

Cunningham—Ancient Geography of India (published by Chakravarti Chatterjee & Co.).

The following books are recommended:—

(1) Pargiter—Translation of the Markandeya Purana (Bhuvana-kosha only).
(2) Marshall—A Guide to Taxila.
(3) Marshall—A Guide to Sanchi.
(4) Sahani—A Guide to Sarnath.
(5) Foucher—Notes on the Geography of Gandhara.
(6) Legge—The Travels of Fa-Hien.
(7) Watters—Yuan Chwang, 2 Vols.
(8) Reports of the Archæological Survey of India about Taxila, Isipatana, Vesali, Savatthi, Rajagaha, Kusinara, Kapilavatthu and Nalanda.
(9) Raychaudhuri—Mountain System of the Puranas. (C. U. Journal of the Dept. of Letters, Vol. 19).
(10) Raychaudhuri—India in Pauranic Cosmography. (C. U. Journal of the Dept. of Letters, Vol. 19).

GROUP D.—MAHAYANA LITERATURE AND PHILOSOPHY.

Paper V.

Lalita-Vistara (first eight chapters).
Asvaghosha's Buddhacarita (Chapters 1-13).

Paper VI.

Madhyamika Karika with Vritti of Chandrakirti (Chaps. I, XXII-XXVI).
Lankavatara Sutra (Bunyiu Nanjio's Edition, first five Chaps. only).
Vijnapti Matrasidhi (Vimsika only) with commentary.
N. Dutt—Some Aspects of Mahayana in relation to Hinayana (Select Chapters).

Paper VII.

Nyayabindu with the Tika of Dharmottara.
Sarvadarsana-sangraha (portion dealing with Buddhist Philosophy only).

For reference—

Vidyabhusana—History of Indian Logic (Buddhist Logic only).

Paper VIII.

A. (*i*) Kielhorn—Sanskrit Grammar.
(*ii*) Macdonnell—Sanskrit Grammar.

Indian Vernaculars.

Bengali.

(Principal Subjects.)

Paper I.

History of Bengali Literature from the earliest times down to 1850.
Special period—Vaishnava Literature during the Sixteenth Century.

Books recommended:—

D. C. Sen—

History of Bengali Language and Literature (Calcutta University).
Vaishnava Literature of Mediaeval Bengal (Calcutta University).

Chaitanya and His Age (Calcutta University).
Folk-Literature of Bengal (Calcutta University).
The Bengali Ramayanas (Calcutta University).
S. K. De— History of Bengali Literature, 1800-1825 (Calcutta University).
Sasankamohan Sen—Vangabānī.

Book of reference:—
M. Adhikari—Vaishnava Digdarsanī.

Paper II.

Caryā-cāryā-Viniscaya; the Caryas of Kanha.
Padmapuran by Vijayagupta.
Gopichandrer Panchali (Calcutta University) and Goraksha Vijaya—Published by the Bangiya Sahitya Parishad.
Sri-Krishna Kirtan, Bansi Khanda and Biraha Khanda.

Paper III.

Mukundarama Kobikankana—Chandimangala. The Kalaketu Story only.
D. C. Sen—Mymensingh Gitika'—Purba-Banga-Gitika'—
Vol. 1.—Mahua', Malua', Chandra'bati, Kamala', Kanka O Lila', Deoa'na' Madina', Kajalrekha'.
Vol. 2.—Dhoba'r Pat, Kanchanma'la', Kamala'ra'ni, Ma'nikta'ra.
Vol. 3.—Ma'njur Ma', Shyam' Rai, A'yna' Bibi.
Vol. 4.—Ra'ju' Raghu, Nachar Ma'lum & Nuranneha'.
Michael Madhusudan Datta—Meghanadabadha Kabya.
Hemchandra Bandyopadhyay—Vritra Samhar, Part II.
Girischandra Ghosh—Praphulla.
Rabindranath Tagore—Balākā.

Recommended for reference only:—
Lalmohan Vidyanidhi—Kāvya-nirnaya.
Syamaprasad Mookerjee—History of the Bengali Stage ("Calcutta Review," January 1924).

Paper IV.

(*a*) Development of Prose Style in Bengali Literature, 1800-57.
(Candidates are recommended to refer to D. C. Sen's Bengali Prose Style.)
(*b*) Influence of Western Culture on Bengali Literature, 1870-1900, with special reference to the works of Bankimchandra and Rabindranath.
In Papers II and III, 75 marks shall be allotted to the texts and 25 marks to the unseen passages.
Questions on the text shall include—
(*a*) Questions on the subject-matter and on the language of the prescribed books (historical, geographical, critical questions and literary allusions are not excluded).
(*b*) Questions on grammar and prosody arising from the texts.
(*c*) Questions on the life and literary career of the authors whose works are prescribed.

Papers V and VI.

(*See* under "Subsidiary Languages.")

Paper VII.

(*See* under "Basic Languages.")

Paper VIII.

B. C. Majumdar—History of the Bengali Language. (Lectures 1, 5, 6, 7, 8, 9 and 14).
S. K. Chatterji—Origin and Development of the Bengali Language.

Hindi.

(Principal Subjects.)

Paper I—History of Literature.

History of Hindi Literature from Chanda Bardai (12th Century) down to Babu Harischandra.
Special subject - Religious Literature of Hindi Vaishnava Poets in the 15th and 16th Centuries.

Books recommended:—

Hindi Bhasha aur Sahitya, by Shyamsundar Das.
Hindi Bhasha, by Pandit Bal Mukund Gupta.
Vernacular Literature of Hindustan, by Sir George Abraham Grierson.
Hindi Literature (Heritage of India Series).
Grierson—Tulsidas.
Greaves—Sketch of Hindi Literature.
Misra Brothers—Misro-Bandu Vinod.
Misra Brothers—Hindi Navaratna.

Paper II—Old Texts.

Chanda Bardai—Prithviraj Rassu. (Select portions in the Kavita Kaumudi of Ram Nares Tripathi.)
Surdas—Samshipta Sur Sagar, Canto X—(Sammilan Edition).
Tulsidas—Kavitavali Ramayan; Vinaya Patrika.
Jayasi—Padumavat, Part I (First half).
Sant Bani Sangraha, Vol. I (Belvedere Press).
Kabir—Selections (Rachanavali, edited by Pandit Ayodhya Singh Upadhyay).

Recommended for reference:—

Bharati Bhushan, by Seth Arjundas Kedia.

Paper III—Mediaeval and Modern Texts.

Bhusan Sivaraj Bhushan.
Bihari Lal—Satsai (Hindi Sahitya Sammeilan).
Ayodhya Singh Upadhyay—Chatkili Chaupadi.
Harischandra—Chandravali.
Sridhar Pathak Kashmir Sukhama.
Lala Bhagawandin—Alankara-Manjusha.
Harischandra Natak (Khargabilas Press, Bankipore).
Dhirendra Varma—Astachhap.

Paper IV—Essay Paper.

(*a*) Development of Hindi Literature, 1850-1900.
(*b*) Persian Influence on Hindi Literature.

Papers V and VI.

(Subsidiary Languages.)

Paper VII.

(Basic Languages.)

Paper VIII.

Grierson—Linguistic Survey of India, Vol. IX (Western Hindi).
Lyall—Article on Hindustani (in the Encyclopaedia Britannica, 9th edition).
Kellogg—Grammar of the Hindi Language.
Greaves—Grammar of Tulsidas.
E. Greaves Hindi Grammar (Indian Press).
N. M. Sanyal—Bhasa-Vijnan.
Syam Sundar Das Do.

Maithili.

(Principal Subject.)

Paper I.

History of Maithili Literature from the earliest times (the thirteenth century down to Chanda Jha).
Special Subject—Age of Vidyapati.

Paper II.

Jyotirishvar Thakur—Varnanaratnakar.
Vidyapati—Padavali, edited by Narendrachandra Gupta, Radhakrishna Padas, 1-106 and Hara-Gauri Padas.

Paper III.

Harshanath—Ushaharan.
Harshanath—Madhavananda.
Jivan Jha—Sundar Samyog.
Lal Das—Ganes Khand.
Jivan Jha—Samavati Punarjanma (Natak).
Govind Das—Padyasangraha.
Ramdas Jha—Anand Vijay.
Umapati—Parijatharana.

Paper IV.

Influence of Persian on Maithili.
Development of Maithili Literature, 1850-1900.

Books recommended:—

Maithila-Darpana, by Rashbiharilal Das.
History of Tirhut, by Shyam Narayan Singh.

Papers V and VI.

(Subsidiary Languages.)

Paper VII.

(Basic Languages.)

Paper VIII.

Linguistic Survey of India, Vol. V, Part II.
Grierson's Maithili Grammar, Second Edition, and Maithili Chrestomathy, Hoernel's Comparative Grammar of the Gaudian Languages.
Article by Sir George Grierson on the Radical and Participal Tenses in the Modern Indo-Aryan Vernaculars, Journal of the Asiatic Society of Bengal, 1895.
S. K. Chatterjee—The Varna Ratnakar of Jyotiriswar Thakur (Proc. of the Fourth Oriental Conference, Vol. II).

Urdu.

(Principal Subject.)

Paper I.

History of Urdu Literature from the earliest times up to Auis. Special period—The Delhi School of poetry up to Mir or The Lucknow School of Atash and Nasik.

Books recommended:—

Saxena—History of Urdu Literature.
Muhammad Husain Azad—Ab-i-Hayat.
Shamsullah Qadri—Urdu-i-Qadim.
Hashimi—Dakan-men-Urdu.
Abdus Salam—Shi-r-ul-Hind. Vols. I, II.
Shirani, Mahmud Khan—Panjab-men-Urdu.

Books of reference:—

Sri Ram—Khum Khana-i-Jawid.
Lyall—Hindustani Language. (In the Encyclopædia Britannica, 9th Edition).
Abdul Hai—Gul-i-Rana.
Garcin de Tassy—Historic de la literature Hindouie et Hindustanie (3 Vols.).
Blumhardt, J. F.—Catalogue of Hindustani MSS. in the India Office Library.
Muhammad Umar and Nur Ilahi—Natak Sagar (*i.e.*, History of Urdu Drama).

Paper II—Old Texts.

(*a*) *Poetry*:—

Diwan-i-Wali—(Anjuman Taraqqi-e-Urdu edition, edited by Ahsan Marahrawi).
Kulliyyat-i-Sawda—(Only those poems are to be read that are included in the Fort William College edition).
Intikhab-i-Kalam-i-Mir—(Anjuman Taraqqi-e-Urdu edition, edited by Abdul Haqq.

(*b*) *Prose*:—

Risala-i-Gisu Daraz—(Edited by Shamsullah Qadiri, Hyderabad, Deccan).

Fasana-i-Ajaib by Rajab Ali Beg Surur.

Araish Mahfil by Mir Shir Ali *Afsos*.

Paper III—Mediaeval and Modern Texts.

(*a*) *Prose and Drama*:—

Muqaddama-i-Shi'r wa Sha'iri by Hali

Laila wa Majnun by Mirza Md. Hadi.

Mazamin-i-Sir Saiyyid Ahmad

Khubsurat Bala—by Agha Hashar—*Malik-ul-Aziz Varjina* by Sharar.

(*b*) *Poetry*:—

Diwan-i-Ghalib (Nizami edition).

Bang-i-Dara—by Sir Muhammad Iqbal.

Kulliyat-i-Atash.

Paper IV.

(*a*) Development of Prose style in Urdu Literature, 1800-1900.

(Candidates are recommended to refer to Md. Yahya's *Siyar-ul-Musannifin* (Vols. I and II) and Ghulam Muhiuddin Qadiri's *Urdu Ke Asalib-i-Bayan*.

(*b*) Influence of Western Culture on Urdu Literature, 1860-1900, with special reference to the works of Sir Saiyyid Ahmad Khan, Abdul Halim *Sharar* and Sir Muhammad Iqbal: (Candidates are recommended to read Dr. A. Latif's *Influence of Western Literature on Urdu*.)

Questions on the text shall include—

(*a*) Questions on the subject-matter and on the language of the prescribed books (historical, geographical, critical questions and literary allusions are not excluded).

(*b*) Questions on grammar and prosody arising from the texts

(*c*) Questions on the life and literary career of the authors whose works are prescribed.

Papers V and VI.

(Subsidiary Languages).

Paper VII.

(Basic Languages.)

Paper VIII

For reference—

Platts—Hindustani Grammar.

Grierson—Linguistic Survey of India, Vol IX (Western Hindi).

Lyall—Article on Hindustani (Encycl. Brit., 9th Ed.).

Kellog—Hindi Grammar (Philological Portions only).

Quadri Urdu Phonetics (Paris, 1930).

Oriya.

(Principal Subject.)

Paper I.

General History of Oriya Literature from the earliest times to 1803 A.D.

Special Period—from 1430 to 1568.

The following books and articles are recommended:—

(1) Syamasundara Rajaguru's Pravandhavali.

(2) Tarnicharan Rath's Utkla Sahitya Itihasa

(3) M. M Chakravarti's Essay in J. A. S. B for 1898, No. 4

(4) Introductory Essays to Vol I and Vol. II of Typical Selections from Oriya Literature by B. C. Majumdar, published by the Calcutta University.

(5) Binayak Misra—Oriya Sahitya.

Paper II.

The following portions from the Oriya Sahitya Parichaya, Vol. I (published by the Calcutta University), pages 1-276, 366-440.

Paper III.

A. Mediaeval—

(1) Upendra Bhanja's Lavanyavati, as in the "Typical Selections from Oriya Literature," Vol. II, pages 79-108.
(2) Abhimanyu Samanta Singhar's Vidagdha Chintamani, as in the "Typical Selections from Oriya Literature," Vol. II, pages 209-331.
(3) Kisori Chandranana Champu, by Baladevo Kavisurya.

B. Modern—

(1) Radhanatha Ray's Mahayatra.
(2) Madhusudan Rao's Vasanta Gatha.
(3) Fakhirmohan Senapati's Lachhama.

Paper IV.

(1) Influence of Upendra Bhanja on the post-Upendra Bhanjic Literature of Orissa.
(2) Growth of Modern Oriya Literature under influence of Western Culture.

Papers V and VI.

(Subsidiary Languages.)

Paper VII.

(Basic Languages.)

Paper VIII.

The following books are recommended:—

(1) Such portions from Beames' Comparative Grammar of Seven Aryan Languages as relate to Oriya in comparison with Bengali and Hindi.
(2) B. C. Majumdar's Lectures on the History of Bengali Language, Lectures X, XI, XII and XIV.

Gujarati.

(Principal Subject.)

Paper I.

History of Gujarati Literature from the earliest times to A. D. 1900.
Special subject—Parsi writers of Gujarati during the 19th century.

Books recommended:—

K. M. Jhaveri—Milestones in Gujarati Literature, Vols. I-II.
D. C. Derasari—Sathina Sabityanu Digdarsan.
K. M. Jhaveri—"Parsi Gujarati Sahitya" in the Vismi Sadi.
A. B. Dhruva and I. J. S. Taraporewala. Selections from Gujarati Literature (Calcutta University), the introductory essay in each writer

Paper II.

Old Gujarati and Rajasthani:—

Padmanath. Kanhad De Prabandh (Derasari's edition).
Bhalan. Kadambari (Kantawala's edition).
Rathor Prithvi Raj. Veli Krishna Rukmani (Tessitori's edition, Asiatic Society of Bengal).
Old Gujarati Collections published by the Baroda Government.

Paper III.

Mediaeval and Modern Texts:—

Premanand and Dayaram. As given in Selections from Gujarati Literature (Calcutta University).
Narmadashankar. Narma Kavita.
Dalpatram. Forbes Viraha and Dalpat Kavya.
Kalapi. Kekarava.
Govardhanram Tripathi. Sarasvatichandra.

Paper IV.

Special subjects:—

(*a*) Women Writers in Gujarati.

(*b*) Akho and Samal.

Papers V and VI.

(Subsidiary Languages.)

Paper VII.

(Basic Languages.)

Paper VIII.

R. L. Turner, Gujarati Phonology (Journal of the Royal Asiatic Society, 1921).

L. P. Tessitori. Notes on the Grammar of Old Western Rajasthani (Indian Antiquary, 1914-16).

Sir G. A. Grierson. Linguistic Survey of India, Vol. IX (Introduction to Gujarati and Rajasthani).

N. B. Davatia. History of the Gurarati Language.

Subsidiary Languages.

Papers V and VI on any one of the following:—

(i) Bengali.

Texts.

University Selections for Prose and Poetry.

Grammar.

G. F. Nicholl. Manual of the Bengali Language.

S. K. Chatterji. Bengali, Self-Taught (Marlborough's Self-Taught series).

History of Literature.

Students are recommended to consult Dineschandra Sen's History of Bengali Language and Literature and Introduction to Typical Selections from Bengali Literature.

S. N. Sen. Modern Bengali Literature ("Calcutta Review," January, 1924.)

(ii) Assamese.

Texts.

Sankaradeva. Rukmini Haran.
Bhattadeva. Katha Gita (first three chapters).
Lakshminath Bezbarua. Kripabar Barbaruar Kakatar Topala.
Rajanikanta Bardolai. Manomati.
S. K. Bhuiyan. Bara Phukanor Git.

Grammar.

Hemchandra Barua. Asamiya Byakaran.
Devananda Bharali. Asamiya Bhashar Maulic Bichar.
Satyanath Bora. Sahitya Bichar.
Devananda Bharali. Anglo-Assamese Grammar.
G. F. Nicholl. Assamese Grammar in Bengali Manual.

Literary History.

Devendranath Bezbarua. Asamiya Bhasha Aru Sahityar Buranji.

(iii) Oriya.

Texts.

Balarama Das. Ramayana (Selections 1 and 2 as in Typical Selections from Oriya, Vol. I).
Madhusudan Rao. Kusumanjali.
Biswanath Kar. Bibidha Prabandha.

Grammar.

Radhanath Ray Vyakarana Pravesa.
E. O. P. Hallam. Oriya Grammar.

Literary History.

Introductory Essays to Typical Selections from Oriya Literature.

(iv) Marathi.

Texts.

Gadyaratna Samuchchay, Part I.
Navanit, pages 47-48, 159-71, 381-410.

Grammar.

Ramchandra Bhikaji Joshi. Praudhabodh Vyakaran.
Kher. Marathi Grammar.

Literary History.

Bhave. Maharashtra Saraswat.
M. K. Nadkarni. A Short History of Marathi Literature.

(v) Hindi.

Texts.

University Selections for Matric. for Prose and Poetry.

Grammar.

Pincott. Hindi Manual.
Etherington. Bhasa-Bhaskar.
Ramcharan Singh. Bhasa Prabhakar (Khadga Vilas Press).

Literary History.

Grierson. Vernacular Literature of Hindustan.
Keay. Hindi Literature.

(vi) Gujarati.

Texts.

Dhruba, A. B. Niti-Sikshan (Selections I-V).
Anjaria and Karim Mohamad. Kavita-Pravas (Parts I-II).
St. Clair Tisdall. Simplified Grammar of the Gujarati Language (Trubner).
Taylor, G. P. The Students' Gujarati Grammar (Thacker, Bombay).
Trivedi, K. P. Madhyavyakaran.
Taraporewala. Main Currents of Gujarati Literature ("Calcutta Review," Jan. and Feb. 1925).

(vii) Urdu.

Texts.

Tarana by Dr. Iqbal.
Tubatu-n-Nasuh (Nazir Ahmed)—(First half).
Nazmi-i-Muntakhab (Selections)—Poetry of Hali and Dagh.
Layala-i-Damishque.
Palmer—Simplified Grammar of Hindustani, Persian and Arabic.
Green—A Practical Hindustani Grammar.
Forbes—A Hindustani Grammar.
Platts—A Hindustani Grammar.

Literary History.

Saxena—History of Urdu Literature.
Azad—Ab-i-Hayat.

(viii) Tamil.

Texts.

Purnalingam Pillai—
Primer of Tamil Literature.
Viveka Vilakkam.
Seyyul Kovai.
Vasaka Thirattu.
Matriculation Selections (Madras University).

Grammar and Literary History.

Wickremasinghe. Tamil Grammar Self-taught.
Pope. Tamil Handbook.
Pope. Catechisms of Tamil Grammar, I-II.
Arden. Progressive Grammar.
Article on Dravidian Languages (Encyclopædia Britannica).

(ix) Telegu.

Texts.

Narasingham and Narasingharow. Ananda Readers, Parts III and IV.
Matriculation Selections (Madras University).

Grammar and History.

Brown. Telegu Grammar.
Morris. Simplified Telegu Grammar.
Arden. Telegu Grammar, 1895; Telegu Companion Reader, 1879.
Article on Dravidian Languages (Encyclopædia Britannica).

(x) Malayalam.

Texts.

Fourth Reader. Basel Mission (Bangalore).
Twelfth Reader. Basel Mission (Bangalore).
Gadya Malika, Part II. Basel Mission (Bangalore).
Matriculation Selections (Madras University).

Grammar and Literary History.

Gundert. Catechism of Malayalam Grammar (Madras, 1881).
Fohrmeyr. Progressive Grammar of Malayalam (Bangalore, 1889).
Poet. Malayalam Grammar (Cottayam 1841).
Article on Dravidian Languages (Encyclopædia Britannica).
History of Malayalam Literature.

(xi) Kanarese.

Texts.

Padya Sara, Part I, pages 1-39.
Katha Sangraha, Part I, pages 30-96.
Katha Sangraha, Part II, pages 265-292.
Konakaluka (Lord Tennyson's "The Cup").
Matriculation Selections (Madras University).

Grammar and Literary History.

Spencer. Kanarese Grammar (Mysore, 1914). Sabdadarsa (Kanarese).
Rice, E. P. History of Kanarese Literature.
Article on Dravidian Languages, Encyclopædia Britannica, Mysore.
Gazetteer: Grierson's Linguistic Survey of India.

(xii) Sinhalese.

Texts.

Kavyashekhara by Sri Rahula Sangharaja of Totagamuwa (Chap. 10 only).
Gunawardhana—Subhashitaya, verses 26-75 (50 verses only).
Samarasekara—Sinhalese Translation of Dighanikaya. Vol. I (Samanna—phala Sutta and Mahaparinibbana Sutta only).

Grammar and Literary History.

Wickremasinghe—Sinhalese Self-taught (London, 1916).
Gunasekara—Comprehensive Sinhalese Grammar (Colombo, 1921).
Gurulu—Amawatura (Chapters 2, 3 and 7 only).

(xiii) Maithili.

Texts.

Ramananda Thakur, Mahabharatsar.
Grierson. Chrestomathy.
Chandra Jha. Ramayan.

Grammar and Literary History.

Grierson. Vernacular Literature of Hindusthan.
Grierson. Maithili Grammar. 2nd edition.
Gangapati Singh. Bal Maithili Vyakaran.

Basic Languages.

Paper VII.

Any two of the following:—

(i) Pali.

Frankfuerter. Pali Hand Book.
Muller. Simplified Pali Grammar.
Victor Henry. Precis de Grammaire Pali.
Vidhusekhar Sastri. Pali Prakasa.
Anderson. Pali Reader—Select portions, *viz*:—
Sumsumura Jataka, pages 1-2.
Sihacamma, J., pages 8-9.
Baveru J., pages 18-19.
Silanisama J., pages 28-29.
Mahosadha's Judgment, pages 58-59.
Cattari Pubbanimittani, pages 63-64.
No Continuous Personal Identity, pages 99.
Rebirth is not Transmigration, pages 100-101.
Padhana-Sutta, pages 103-104.
Dhaniya-Sutta, pages 104-105.
Selections from the Dhammapada, pages 106-107.

(ii) Prakrit.

Vararuchi—Prakrita Prakasa.
Rajasekara—Karpuramanjari.
Woolner—Introduction to Prakrit.

(iii) Persian.

M. T. Dadachanji—First step in Persian.
M. Kazim Shirazi—New Persian Selections omitting pp. 1-10, 10-37, 61-88.
M. Kazim Shirazi—Sahl-Amuz-i-Farsi, Part II (omitting poetry portions).
M. Hidayet Hussain—Grammar of Modern Persian (Macmillan and Co.).
Kanga—Hints on the Study of Persian.
St. Clair Tisdall—Persian Conversational Grammar, pages 1-100.

SYLLABUS IN PERSIAN AND ARABIC FOR THE M.A. EXAMINATION.

I.

Persian.

I. The M. A. Course in Persian shall be divided into five groups.

II. The first four papers of all the groups shall be identical and shall cover the following subjects:—

Compulsory Papers.

Paper I—(*i*) General History of Pre-Islamic and Post-Islamic Persia 70

(*ii*) General History of Islamic India 30

Books recommended—

1. Irani Bastani, by Hasan Perniya.
2. History of Persia, by Sykes, Vols. I-II.
3. History of India, by Smith.
4. Seyrul-Mutaakkhirin (omitting the Hindu Period).

Paper II—(*i*) History of Persian Literature ... 100

Books recommended—

1. Literary History of Persia, by E. G. Browne, Vols. I-IV.
2. Shiru'l-Ajam, by Shibli, Vols. I-V.

Paper III—(*i*) Philology— 30

The Course in Persian Philology includes the following topics:—

Classification of Language—the Indo-European Family of Languages—the Aryan or Indo-Iranian branch—the Classification of the Iranian Speeches—History of Iranian in its sounds and inflexions in the Old Iranian, Middle Iranian and New Iranian Periods (through the Persian Language).

(*ii*) Rhetoric and Prosody 30

(*iii*) Unseen 40

Books recommended—

1. Persian Grammar, by Platts and Ranking (Parts dealing with Philology).
2. Sakhundeni Pars.
3. Ethes Article on the Persian Language in Ency. Britt.
4. Hadaiqu'l-Balaghat.
5. Hadaiqu'l-Sihr.
6. Aruzi Sayfi—English Translation by Blochman.

Paper IV.—(*i*) Modern Persian.

(*a*) Poetry
(*b*) Prose } 50

(*ii*) Essay on a subject connected with the compulsory papers.

Books prescribed—

1. Haji Baba, up to the end of the 17th Guftar.
2. Wukalai Murafaa.
3. Diwan-i-Bahar—first hundred Ghazals.

III. The remaining papers shall be taken from one of the following groups:—

GROUP A.

Literature.

Paper V.—Text—Poetry (*i*) Ghazal 70

(*ii*) Rubai 30

Books prescribed—

1. Ghazals of Sadi, up to Radif-i-Dal.
2. Ghazals of Naziri, Radif-i-Dal only.
3. Rubaiyat of Umar Khayyam (Dr. Rosen's Edition).

Paper VI.—Text—Poetry (*i*) Qusida 50

(*ii*) Mathnawi 50

Books prescribed—

(*i*) Qasaid of Khaqani—the first 18 Qasidas omitting those included in the Honours Course.
(*ii*) Naldaman, by Faydi.

Paper VII—Text—Prose (ornate) 100

Books prescribed—

1. Se-nathr, by Zahuri.
2. Shmsa wa Qahqaha—Chap. II—up to the end of the 3rd Majlis.

Paper VIII—Text—Prose (simple) 100

Books prescribed—

1. Tadhkiratul-Ahwal, by Ali Hazin.
2. Tajalliyat-i-Ruh-i-Irani, by Husain Kazim Zade.

GROUP B.

Historical Literature (Persian).

Paper V.—Text—Historical Poetry 100

Book prescribed—

Shahnama—Macan's Edition, pp. 1065-1286.

Paper VI.—Text—Prose—Tahiride and Ghaznawide Periods ... 100

Book prescribed—

Zaynul's Akhbar, by Gurdizi.

Paper VII—Text—Prose—Saljuq and Tatar Periods ... 100

Books prescribed—

1. Tarikhi Saljuqian—Houtmas Edition.
2. Jamai'l-Tawarikh (Tatar period).

Paper VIII.—Text—Prose—Safawide and Qachar Periods ... 100

Books prescribed—

1. Nasikhu'l-Tawarikh, Vol. Qachar.
2. Alam Arai Abbasi.

GROUP C.

Historical Literature (Indian).

Paper V.—Text—Historical Poetry 100

Book prescribed—

Qiranu'l-Sadayn.

Paper VI.—Text—Prose—Pre-Moghal Period ... 100

Book prescribed—

Tarikhi-Mubarak Shahi.

Paper VII.—Text—Prose—Moghal Period (Baber-Akber) ... 100

Book prescribed—

Muntakhabal-Tawarikh (Baber-Akber).

Paper VIII.—Text—Prose—Moghal Period (Jahangir and Shah Jahan) 100

Book prescribed—

Muntakhabu'l-Lubab.

GROUP D.

Mysticism.

Paper V—Text—Mystical Poetry 100

Books prescribed—

1. Hadiqae-Thanai—Hadiqa I.
2. Mathnawi, by al-Rumi, Dafter I (up to the beginning of Tafsir-i-ma-sha allahu Kana).

Paper VI.—Text—Prose 100

Books prescribed—

1. Kimyai Saadat, by al-Ghazali—Ruku 3 and 4.
2. Kashfu'l-Mahjub—up to p. 150 (Gibb. Mem. Edition).

Paper VII.—Philosophy of Mysticism 100

Books recommended—

1. Studies in Sufiism, by R. A. Nicholson.
2. Development of Metaphysics in Persia, by Sir Muhammad Iqbal.
3. Nafahatul Uns, by Jami (The Introduction).

Group E.

Philology.

Paper V—

(*a*) General Principles of Linguistics
(*b*) History of the Persian Script ... } 100

Books prescribed—

1. L. Bloomfield—An Introduction to the study of Language (New York, Henry Holt and Co.).
2. H. Sweet—A Primer of Language (J. M. Dent).
3. I. Taylor—The Alphabet.

Paper VI—Texts (including elements of Grammar)—

(*a*) Avesta
(*b*) Old Persian } 100

Books prescribed—

1. Herbert Cushing Tolman—Ancient Persian Lexicon and the Texts of the Achaemenidan Inscriptions, transliterated and translated (Vanderbilt Oriental Series, Vanderbilt University, Nashville, Tennessee, U. S. A.; Behistan, Vols. 1 & 2).
2. Edwin Lee Johnson—Historical Grammar of the Ancient Persian Language (Vanderbilt Oriental Series, Vol. VIII).
3. A. Meillet Grammaire de Vieux Perse (Paris, E. Guilmoto, 1915).
4. Avestan—I. J. S. Taraporewala—Selection from Avesta and Old Persian, First Series, Part I (Calcutta University, 1922) (Haoma Yast, Sraosa Yast, the Zoroastrian Creed—The three prayers).
5. A. V. W. Jackson—An Avesta Grammar (Stuttgart, 1892, reprinted 1912).

Paper VII—

(*a*) Pahlavi Text (including elements of Grammar)
(*b*) Semitic Influence on Persian Language } ... 100

Books prescribed—

1. Pahlavi—J. M. Unvala—The History of King and his Boy (Paris, Paul Geuthner).
2. E. Blochet—Etudes de Grammaire Pehlevie (Paris, E. Guilmoto).
3. C. Salemann—Mittelpersisch, in the Grundriss der Iranischen Philologie.

Paper VIII.—(*a*) Historical Grammar of the Iranian Languages 50

(*b*) Sanskrit 50

Book prescribed—

Selections from the Matriculation Course (Calcutta University).

Books recommended—

1. Grundiss der Iranischen Philologie:-

Dr. Bartholomae's Old Persian and Avestan Grammar, Salemann's Middle Persian and Dr. Paul Horn's Modern Persian Literary Speech.

2. H. Reichelt—Awestisches Elementarbuch (Heidelberg).
3. L. H. Gray—Indo-Iranian Phonology (Columbia University Press).

Only such students will be permitted to take up this Group as have passed B.A. Examination with Honours in Persian or M.A. Examination in any other Group in Persian.

IV. A candidate who has taken his B.A. Degree with Honours in Persian may, subject to the conditions specified below, offer a thesis connected with some department of the subject in lieu of examination in two Papers. If the candidate has taken up Group B or C, the thesis will be allowed to be substituted for Papers I and IV. If the candidate has taken up Groups A, D or E, the thesis will be allowed to be substituted for Papers III and IV. The thesis may be written in Persian or in English.

V. The conditions to be fulfilled by a candidate who is allowed to offer a thesis are as follows:—

(*a*) He must have completed one year's study of the M.A. Course in Persian under University Lecturers or in a College affiliated in Persian up to the M. A. standard.

(*b*) He must, at the end of the year, submit to the Board of Higher Studies in Arabic and Persian, an application for permission to offer a thesis in lieu of a part of the Examination.

(*c*) The application shall indicate the subject and scope of the thesis he wishes to offer and must be recommended by the Professor or Professors under whom he has been working.

(*d*) If the application be granted by the Board of Higher Studies in Arabic and Persian, the thesis must be prepared under the general direction of the Professor or Professors with whom the candidate is prosecuting his studies.

(*e*) The candidate shall deliver three copies of the thesis (printed or typewritten) to the Secretary to the Council of Post-Graduate Teaching in Arts, at least one month before the first day of the M.A. Examination at which he intends to present himself.

(*f*) The thesis shall be examined by a Board of three Examiners and the maximum number of marks assigned to the thesis shall be 200. The Examiners may, at their discretion, subject the candidate to a *viva voce* examination on the subject of the thesis.

(*g*) The name of a candidate whose thesis has been approved shall be marked with an asterisk in the list of successful candidates published in the Gazette and also in the University Calendar.

Note.—For the present, the University, on account of want of staff, provides for the teaching of Group A (Literature) only.

II

Arabic.

I. The M.A. Courses in Arabic shall be divided into six groups.

II. The first four papers of all the groups shall be identical and shall cover the following subjects:—

Compulsory Papers.

Paper I—History of Islam in Arabia and Persia and in Mediterranean countries. 100

Books recommended—

1. Tarikhu Abil Fida—Vols. I-II.
2. History of the Islamic People (Khuda Bukhsh).
3. History of the Saracens (Amir Ali).
4. Al-Khitat wal-Athar (al-Maqrizi).
5. Tarikhu'l-Islam (Farid Wajdi).

Paper II—(*i*) History of the Arabic Language 30

The course in the History of the Arabic Language includes the following topics:—

Classification of Languages—the General Characteristics of the Semitic Family of Speech—The Grouping of the Semitic Languages—Elements of the History of the Sounds and inflexions of Arabic in the Pre-Islamic and Classical Periods.

(*ii*) History of Arabic Literature 70

Books recommended—

1. Tarikhu-Adabil-Lughatil-Arabiya (al-Rafai).
2. Literary History of the Arabs (Nicholson).
3. History of Arabic Literature (C. Huart).
4. Falsafatul-Lughatil-Arabiya J. (Zaydan).

5. Article on Semitic Languages in the Ency. Britt. (11th Ed.) (by Th. Nöldeke).
6. Semitischen Sprachen (Th. Nöldeke).

Paper III—(*i*) Arabic Grammar 30

(*ii*) Rhetoric and Prosody 30

(*iii*) Translation of Unseen passages from Arabic into English and *vice versa*. 40

Books recommended—

1. Arabic Grammar by Palmer.
2. Muffassal by al-Zamkhshari.
3. Dalailu'l-Ijaz by al-Jurjani.
4. Muhitu'l-Daira.
5. Ilmu'l-Adab.
6. Iqdu'l Jumman.

Paper IV—(*i*) Modern Arabic—

(*a*) Prose, and
(*b*) Poetry } 50

(*ii*) Essay on a subject connected with the compulsory papers:— 50

Books prescribed—

1. Fatatu-Ghassan.
2. Misriyyat by Dr. Ahmad Zaki.

III. The remaining papers shall be taken from one of the following groups to be selected by the candidates:—

GROUP A.

Literature.

Paper V—Text—Pre-Islamic Poetry 100

Books prescribed—

1. The Dewan of Zuhayr.
2. The Lamiyatu'l-Arab (by al-Shanfara).

Paper VI.—Text—Post-Islamic Poetry 100

Books prescribed—

1. The Diwan of Muslim al-Walid (Sariu'l-Ghawani).
2. The Lamiyatul-Ajam (al-Taghrai).

Paper VII—Text—Literary Criticism 100

Books prescribed—

1. Kitabu'l-Shiri Wal-Shuara—Introduction.
2. Nqdu'l-Shiṛ (by Ibn Quadama).
3. Adabu'l Katib (by Ibn Qutayba)—1st Half only.

Paper VIII—Text—Prose 100

(*i*) Rhymed.
(*ii*) Unrhymed.

Books prescribed—

1. The Maqamat of al-Hariri (First five Mapamat).
2. The Rannatul-Mathani (First half of Vol. I).

GROUP B.

History.

Paper V—Philosophy of History 100

Text prescribed—

The Prolegomena of Ibn Khaldun.
From the beginning up to the end of Section 37.

Paper VI—Early Calliphat, Umayyads and Abbasides ... 100

Text prescribed—

1. al-Akhbaru'l Tiwal (From the birth of the Prophet Muhammad up to the end—pp. 75-402—European Edition).
2. Kitabul-Fakhri.

Paper VII—Muslims in Spain 100

Text prescribed—

Nafhu'l-Tib—Vol. I—Chaps.—2, 3 and 4.

Paper VIII—A special period in the History of Islam to be prescribed every year by the Board 100

GROUP C.

The Quran and the Tafsir.

Paper V—Text from the Quran 100

(*i*) Sura Maida.
(*ii*) Sura Yusuf.
(*iii*) Sura Najm.

Paper VI—Text—Tafsir.

al-Baydawi-Sura Ali Imran.

Paper VII—Quranic Sciences 100

Books recommended—

(*i*) al-Itqan byal-Suyuti.
(*ii*) al-Fauzu'l-Kabir.

Paper VIII—History of the Interpretation of the Quran ... 100

Books recommended—

1. al-Fihrist (by Ibnu'l Nadim).
   Discourse 1. Section 1 (on the Quran).
2. Geschichte der Quran (by Nöldeke).
3. Introduction to the Translation of the Quran (by Muhammad Ali).
4. Canon Sell's Introduction to the Translation of the Quran.
5. Quran Auslegung (by Goldziher).

GROUP D.

Hadith.

Paper V—Text 100

Books prescribed—

(*i*) Sahih of al-Bukhari—Chapters on Fazail of the Quran on Sulh, on Adab and on Itisam.

Paper VI—Text—

Books prescribed—

(*i*) Jami of al-Tirmidhi—Chapters on Birr and Sila on Ilm and on Siyar.
(*ii*) Muatta of Imam Malik, up to the beginning of Kitabul-nikah.

Paper VII—Usul-i-Hadith including the Maudu'at.

Books recommended—

(*i*) Nukhbalu'l-Fikar.
(*ii*) Muqddamatu Ibni Salah.
(*iii*) Alfiya by al-Iraqi.
(*iv*) Mauduat by Mulla Ali Qari.

Paper VIII—The History of the Development of the Science of Hadith 100

Books recommended—

(1) Tarikhul-Lughatil-Arabia (Parts dealing with the Hadith).
(2) Muhammadanische Studien, Vol. II, Kapitel I-VIII.
(3) Islamic Traditions.
(4) Muqddama of Ibn Khaldun (Chapters on the Science of Hadith).
(5) Ibn Khallikan—Articles on prominent Muhaddithin.
(6) al-Ikmal.

GROUP E.

Ilmu'l-Kalam and Philosophy.

Paper V—al-Falsafatul-Ishraquiya 100

Text prescribed—

The Sharhu Hikmatil-Ishraq (by Shahabuddin).

Paper VI—al-Falsafatul-Mashshaiya 100

Text prescribed—

(1) The Sharhu-Hikmatil-'Ayn (by al-Razi).

Paper VII—Ilmu'l-Kalam 100

Text prescribed—

(1) The Sharhu'l Tajriad (by al-Qaushji).

Paper VIII—History of Muslim Philosophy and Ilmu'l-Kalam 100

Books recommended—

(1) History of Philosophy in Islam (by Dr. T. J. De Boer).
(2) Histoire de la Philosophie Medievale (by Maurice de Wulf).
(3) Entwicklung der Arabichen und Judichen Philosophie im Mittelalter (by Pollak), pp. 196-286, 433-459.
(4) al-Kalam by Shibli.
Ilmu'l-Kalam by Shibli.

GROUP F.

Philology and Grammar.

Only such students will be allowed to take up this Group as have passed the B.A. Examination with Honours in Arabic or any other Examination equivalent to it or the M.A. Examination in any other Group in Arabic.

Paper V—(*i*) Arabic Grammar 50
(*ii*) Linguistic theories of the Arab Grammarians ... 50

Books recommended—

1. Arabic Grammar by W. Wright (Cambridge University Press).
2. The Commentary on Alfiyya (by Ibnu'l-Aquil).
3. al-Kitab by Sibwayhi.
4. Kitabul-Insaf—by Ibnu'l-Anbari.

Paper VI—(*i*) General Principles of Linguistic Development including Phonetics 100
(*ii*) Elements of Arabic Palaeography 100

Books recommended—

1. Leonard Bloomfield—An Introduction to the Study of Language (New York, Henry Holt & Co.).
2. Henry Sweet—A Primer of Language (Dent).
3. W. H. T. Gairdner—The Phonetics of Arabic (Oxford University Press).
4. Isaac Taylor—The Alphabet.

Paper VII—(*a*) Hebrew 50

Books prescribed—

1. Davidson's Hebrew Grammar.
2. Bible—Genesis, Chapters I-III; Book of Ruth.

(*b*) Syriac— 50

Books prescribed—

1. Robinson—Syriac Grammar.
2. Bible—Matthews' Gospel, Chapters V-XV.

Paper VIII—Comparative Philology of the Semitic Language 100

Books recommended—

1. Vergleichende Grammatik der Semitichen Spruchen, Vols. I-II (Charl Brockelmann).

2. Comparative Grammar of Semitic Language (Wright).
3. Semitic Language (O'Leary).
4. French Translation of Brockelmann's Smaller Comparative Grammar of the Semitic Languages (Sammlung Goschen Series) by Marcais and Cohen (Paris, Paul Geuthner).

IV. A candidate who has passed the B.A. Examination with Honours in Arabic of the Madrasa Senior Certificate Examination or any other Examination equivalent to it may, subject to the condition specified below, offer a thesis on a subject connected with the Special Group chosen for study, instead of Papers III and IV. The thesis may be written in Arabic or in English.

V. The conditions to be fulfilled by a candidate who is allowed to offer a thesis are as follows:—

(*a*) He must have completed one year's study of the M.A. course in Arabic under University Lecturers or in a College affiliated in Arabic up to the M.A. standard.

(*b*) He must at the end of the year, submit to the Board of Higher Studies in Arabic and Persian, an application for permission to offer a thesis in lieu of a part of the Examination.

(*c*) The application shall indicate the subject and scope of the thesis he wishes to offer and must be recommended by the Professor or Professors under whom he has been working.

(*d*) If the application be granted by the Board of Higher Studies in Arabic and Persian, the thesis must be prepared under the General direction of the Professor or Professors with whom the candidate is prosecuting his studies.

(*e*) The candidate shall deliver three copies of the thesis (printed or typewritten) to the Secretary to the Council of Post-Graduate Teaching in Arts, at least one month before the first day of the M.A. Examination at which he intends to present himself.

(*f*) The thesis shall be examined by a Board of three Examiners and the maximum number of marks assigned to the thesis shall be 200. The Examiners may, on their discretion, subject the candidate to a *viva voce* examination on the subject of the thesis.

(*g*) The name of the candidate whose thesis has been approved shall be marked with an asterisk in the list of successful candidates published in the Gazette and also in the University Calendar.

Note.—For the present, the University, on account of want of staff, provides for the teaching of the Group A (literature) only.

Comparative Philology.

A. INDO-ARYAN BRANCH.

Paper I.

General Principles of Philology and the Science of Language; Growth and Change in Language; Semantics; Language Types and Classification of Languages; History of the Science of Grammar and Linguistics in India and in the West.

Books prescribed:—

Jespersen, O.—Language (George, Allen and Unwin).
Jespersen, O.—Philosophy of Grammar (George, Allen and Unwin).
Oertel, H.—Lectures on the Study of Language (Yale University).
Vendryes, J.—Language (Kegan Paul).
Greenough, J. B., and Kittredge, G. L.—Words and their Ways in English Speech (Macmillan).
McKnight, G. H.—English Words and their Background (Appleton, New York).
Belvalkar, S. K.—Systems of Sanskrit Grammar (Oriental Book Supplying Agency, Poona).
Encyclopaedia Britannica, 11th Ed.—Article on "Philology."

Paper II.

Phonetics: the Structure of the Vocal Organs; Production and the Classification of Speech Sounds, with special reference to the Sound System of English and Bengali (or of the candidate's mother tongue); Phonetic Script; Linguistic Palaeontology as illustrated in the Indo-European Languages; Outline of the History of Writing with special reference to the Scripts of India.

Books prescribed:—

Noël-Armfield, G.—General Phonetics (Heffer, Cambridge).
Dumville, B.—The Science of Speech (London University Tutorial Series).
Chatterji, S. K.—A Brief Sketch of Bengali Phonetics (International Phonetic Association, University College, London).
Petrie, Sir W. M. Flinders—Formation of the Alphabet (British Museum).
Encyclopaedia Britannica, 11th Ed.—Articles on "Accent," "Alphabet" and "Phonetics."
Isaac Taylor—The Alphabet.

Paper III.

Comparative Grammar of Old Indo-Aryan (Sanskrit).

Books prescribed:—

Macdonell, A. A.—A Vedic Grammar for Students (Oxford).
Uhlenbeck, C. C.—Sanskrit Phonetics (Luzac).
Speijer, J. S.—Sanskrit Syntax (E. Brill, Leyden).
Whitney, W. D.—Sanskrit Grammar (Breitkopf and Hartel, Leipzig). (For reference only.)
Thumb—Handbuch des Sanskrit.

Paper IV.

Historical Grammar of Middle Indo-Aryan (Pali and the Prakrits).

Books prescribed:—

Woolner, A. C.—An Introduction to Prakrit (Punjab University).
Geiger—Pali Litteratur und Sprache.

Paper V.

Historical and Comparative Grammar of Modern Indo-Aryan (Bengali or the candidate's mother tongue).
Chatterji, S. K.—Origin and Development of the Bengali Language, Vols. I and II. (Calcutta University.)
Prescribed books in other Modern Indo-Aryan languages shall be announced later on.

Paper VI.

Essays (two essays to be chosen out of five subjects).

Alternative A.—Aryan and Indo-European Philology.

Paper VII.

Indo-Iranian (Aryan) Philology, with Elements of Avesta and Old Persian.

Books prescribed:—

Taraporewala, I. J. S.—Selections from Avesta and Old Persian, First Series, Part I (Calcutta University).
Jackson, A. V. W.—Avesta Grammar (W. Kohlhammer, Stuttgart).
Johnson, E. L.—Historical Grammar of the Ancient Persian Language (American Book Co.).
Haug, M.—Essays on the Religion of the Parsis (Kegan Paul). (For reference only.)
Dhalla, M. N.—Zoroastrian Theology. (For reference only.)

Paper VIII.

Indo-European Philology, with Elements of Greek.

Books prescribed:—

Pharr, C.—Homeric Greek (D. C. Heath, New York).
Wright, J.—Comparative Grammar of the Greek Language (Oxford).

Alternative B.—Philology of the Non-Aryan Languages of India.

Paper VII.

Dravidian Philology, with Elements of Tamil.

Books prescribed:—

Caldwell, R.—Comparative Grammar of the Dravidian Languages (Kegan Paul)

Wickremasinghe, M. De Zilva—Tamil Grammar Self-taught (E. Marlborough and Co., London).

Pope, G. U.—Tamil Reader (Oxford).

Paper VIII.

Kol (Munda) and Tibeto-Burman Philology with Elements either of a Kol Speech or of Tibetan.

Books prescribed:—

Nottrott, A.—Grammar of the Kol Language (G. E. L. Mission Press, Ranchi).

Hoffman, J.—Mundari Grammar, Introduction (Government Book Depôt, Calcutta).

Bodding, P. O.—Materials for a Santali Grammar (Scandinavian Mission, Dumka).

Linguistic Survey of India. Introductions, Vol. III, Part I, and Vol. IV.

Jaschke, H. A.—Tibetan Grammar (Trübner).

Matriculation Course of Classical Tibetan. (Calcutta University Selections only.)

Texts in a Kol language to be prescribed later on.

B.—IRANIAN BRANCH.

Paper I.

General Principles of Philology and the Science of Language; Growth and Change in Language; Semantics; Language Types and Classification of Languages; History of the Science of Linguistics in the East and in the West.

Books:—

Jespersen, O.—Language (George, Allen & Unwin). Philosophy of Grammar. (George, Allen & Unwin).

Oertel, H.—Lectures on the Study of Language (Yale University).

Vendryes, J.—Language (Kegan Paul).

Greenough, J. B. and Kitteredge, G. L.—Words and their ways in English Speech (Macmillan).

McKnight, G. H.—English words and their Background (Appleton (New York).

Browne, E. G.—Literary History of Persia, Vol. I, pp. 1-88 (Unwin).

11th Ed. Encyclopædia Britannica—Article on "Philology."

Paper II.

Phonetics: the Structure of the Vocal Organs, the Production and the Classification of Speech sounds with special reference to the Sound Systems of English and of Bengali (or of the candidate's mother tongue), Phonetic script; Linguistic Palæontology as illustrated in the Indo-European Languages; Outlines of the History of Writing with special reference to the Scripts of Persia.

Books:—

Mott, F. W.—The Brain and the Voice in speech and song (Harper).

Noël-Armfield, G.—General Phonetics (Heffer, Cambridge).

Chatterji, S. K.—A brief Sketch of Bengali Phonetics (International Phonetic Association, University College, London).

Childe, V. G.—The Aryans (Kegan Paul).

Petrie, Sir W. M. Flinders—Formation of the Alphabet (British Museum).

11th Ed. Encyclopædia Britannica—Articles on "Accent," "Alphabet," "Cuneiform" and "Phonetics."

Isaac Taylor—The Alphabet.

Paper III.

Comparative Grammar of Old Iranian (Avestan and Old Persian).

Taraporewala, I. J. S.—Selections from Avesta and Old Persian (Calcutta University, 1922), Hasma Yast, Sraosha Yast, the Zoroastrian Creed, the three Prayers).

Tolman, H. C.—Ancient Persian Lexicon and the Texts of the Achæmenian Inscriptions (Vanderbilt Oriental Series, Nashville, Tennesse, U.S.A. Behistun, Columns I & II).

Jackson, A. V. W.—Avesta Grammar (W. Kohlhammer, Stuttgart).

Johnson, E. L.—Historical Grammar of Old Persian (American Book Co.).

Paper IV.

Historical Grammar of Middle Iranian (Pahlavi).

Haug, M.—Essay on Pahlavi.

Bharucha, S. D.—Lessons in Pahlavi Pazand, Pts. I-III (Parsi Panchayet, Bombay).

Unvala, J. M.—King Husrav and his Boy (Paul Geuthner, Paris).

Paper V.

Historical and Comparative Grammar of Modern Iranian (Persian).

Platts, J. T., and Ranking G. S. A.—A Persian Grammar (Oxford).

Phillott, D. C.—Higher Persian Grammar (Calcutta University) for reference only.

11th Ed. Encyclopædia Britannica—Article on "Persian Language."

Grundriss der iranischen Philologie (for reference only.)

Paper VI.

Essays (two essays to be chosen out of five given subjects).

Paper VII.

Sanskrit and the Elements of Indo-Aryan Philology.

Macdonell, A.—Vedic Reader (Oxford), the following Selections:—I, 1, 35, 154; II, 12; III, 59; VII, 61, 86; VIII, 48; X, 14, 15, 90, 129. A Vedic Grammar for Beginners (Oxford).

Trivedi, K. P.—The Sanskrit Teacher (Macmillan).

P. D. Gune—Introduction to Comparative Philology (Poona).

Paper VIII.

Arabic with the Elements of Semitic Philology; Semitic Influence on the Development of the Persian Language.

Thatcher, G. W.—Arabic Grammar (J. Groos, Heidelberg).

Thornton, F. du Pre and Nicholson, R. A.—First Arabic Reading Book (Cambridge) selection from the Quoran. Elementary Arabic Grammar.

O'Leary, de L.—Comparative Grammar of the Semitic Languages. (Trubner's)

11th Ed. Encyclopædia Britannica—Article on Semitic Languages.

Philosophy.

Paper I.—History of Ancient and Mediaeval European Philosophy.

Paper II.—History of Modern European Philosophy.

Paper III.—Indian Philosophy.

Papers IV and V.—Theory of Knowledge and Metaphysics.

Papers VI and VII.—Any one of the following subjects to be selected by the candidate, two papers being set in each, (*i*) Psychology, (*ii*) Logic, (*iii*) Ethics and Social Philosophy, (*iv*) Philosophy of Religion, (*v*) some Special Branch of Indian Philosophy.

Paper VIII.—Essay.

Paper I.—History of Ancient and Mediaeval European Philosophy.

Pre-Socratic Philosophy. The Sophists. Socrates. Socratic Schools. Plato. Aristotle. Stoics. Epicureans and Sceptics. Neoplatonism. Gnosticism. Patristic and Scholastic Philosophy.

Candidates are expected to have a special knowledge of the system of Plato and of the Republic of Plato.

Course of reading suggested:—

Ueberweg—History of Philosophy.

Caird—Development of Theology in Greek Philosophers.

Zeller—Plato.

Inge—The Philosophy of Plotinus.

De Wulf—History of Mediaeval Philosophy.

Paper II.—History of Modern European Philosophy.

Descartes, Spinoza, Leibnitz, Locke, Berkeley, Hume, Kant, Fichte, Schelling, Hegel, Herbart, Lotze and Schopenhauer.

Candidates are expected to have a special knowledge of Kant's Critique of Pure Reason.

Erdmann—History of Philosophy, Vol. II.

Watson—The Philosophy of Kant as contained in extracts from his own writings.

Blackwood's Philosophical Classics—Descartes, Spinoza, Leibnitz, Locke, Berkeley, Hume, Kant, Fichte and Hegel.

Paper III.—Indian Philosophy.

Germs of Philosophic and Religious Thought in the Rig Veda. The Upanishads: Reality, World, Soul, God, Ethics and Religion, Karma and Rebirth, Moksha. The theism of the later Upanishads. The main currents of thought, metaphysical and ethical, in the Bhagabadgita. The Carvaka theory. Buddhism: its relation to the Upanishads, the Four Truths, Conception of reality, Soul, Karma and Rebirth, Ethics, Nirvana. The four schools of Buddhism: Jaina Logic, Metaphysics and Ethics.

The Nyaya theory of Pramanas, Causality, God and Soul. The Vaisheshika Categories and Atomism. The Samkhya theory of Purusha and Prakriti and their mutual relation. Cosmic evolution; nature of cognition. The alleged Atheism of Kapila. Patanjali's view of God. The Purva Mimamsa: General character. Apurva. The theory of knowledge of Kumarila and Prabhakara. The Vedanta. Brahman. Jiva. Karma and its relation to Jnana according to Sankara and Ramanuja. Sankara on Adhyasa, Maya and Avidya. Ramanuja's objections against Maya. His conception of reality. Personality of God. Moksha in the different systems.

Das Gupta—History of Indian Philosophy.

Kokileswar Sastri—Advaita Philosophy.

Radhakrishnan—Indian Philosophy, Vols. I and II.

Urquhart—Vedanta and Modern Thought.

Seal—The Positive Sciences of the Ancient Hindus, Chapters I and VII.

Sarkar, M. N.—System of Vedantic Thought and Culture.

A. B. Keith—Indian Logic and Atomism.

A. K. Majumdar—Sankhya Conception of Personality (Calcutta University Publication.)

Hume's Thirteen Principal Upanishads. Rhys David's Dialogues of Buddha. Sankarabhashya and Rāmānujabhāshya on the Vedanta Sutras may also be consulted.

In preparing for Papers I, II and III candidates are advised to make as much use as possible of the original texts which are (many of them) now accessible in good English translation.

Papers IV and V.—Theory of Knowledge and Metaphysics.

The analysis of knowledge-relation. Subject and Object. Image, Idea and Meaning as factors in Logical Thought. The problem of Predication. Universals, Relations, External and Internal. Perception, Conception and Intuition. Unity and Continuity of Intellectual Life.

Thought and Reality. The Criterion of Truth. Coherence. Correspondence, Pragmatist Theory. Degrees of Truth. Error. The Svatah-prāmānya and the pratahprāmānya theories of the Hindu thinkers.

The relation of Metaphysics to Psychology, Logic and Ethics. Space, Time and their mutual relations. Change and Causality. Substance. The nature of Reality. Matter, Life and Consciousness. Evolution. Mechanism and Teleology. The relation of the Absolute to the World of Becoming. Maya. The Individual Self. The Problem of Values.

Issues and tendencies in Contemporary Philosophy. Absolute Idealism: Green, Caird, Bradley, Bosanquet and Royce. Neo-Idealism: Croce and Gentile. Neo-Realism: Russell and Alexander. Critical Realism. Bergson's Evolutionism.

Bradley—Appearance and Reality (Chapters I-IV. Thought and Reality, also appendices).

Bosanquet—The Principle of Individuality and Value.

Bergson—Introduction to Metaphysics.

Haldar—Neo-Hegelianism.

New Realism by E. B. Holt and others.

Optional Subjects.

I.—PSYCHOLOGY.

General and Physiological Psychology.

The rôle of Psychology as a Science:—Methods of Psychology: Facts of mental life—Sensation, Image, Perception, Attention, Imagination, Association, Memory and Recognition, Thought, Feeling and Emotion, Conation The concept of Psychic Elements—their modes of combination.

The general structure of the nervous system—structure and function of the sense organs, cerebral localisation—the different bodily organs and their influence upon the mental life.

Historical development of the fundamental concepts.

The standpoints of Psychology. Self. Consciousness The unconscious and the sub-conscious. Psychic causality. Mental activity. The relation between body and mind.

Comparative and Abnormal Psychology.

Criteria of Mind and Intelligence. Types of animal behaviour. Learning process. Course of mental development.

Psychic determinism. Methods of investigation. The unconscious and Repression. The sexual instinct and Perversions Hypnotism. Dream Psychopathology of everyday life, Neuroses, Psychoneuroses and Psychoses.

Pillsbury—History of Psychology.

McDoughall—Outlines of Abnormal Psychology.

Hollingworth—Data and Principles of Psychology.

Psychologies of 1925 (Clarke University Press).

Ward—Psychological Principles.

II.—LOGIC.

Relation to Psychology and Metaphysics. Formal and Material Logic. Thought and Language. Names and their import. Extension and Intension of terms. Predicables. Judgment. Theories of Judgment. Varieties of Judgment. Negation. Disjunction.

Inference. Theories of Inference Deduction and Induction. Varieties of Deductive Inference. Syllogism Discovery and Proof. Causal relation. Enumeration. Induction Mathematical Reasoning.

Scientific Induction. Hypothesis. Bacon. Newton Whewell and Mill on the Inductive Method. Laws of Nature. Necessity in Knowledge The Laws of Thought. Explanation and its Limits.

Logic as Dialectic. Plato, Kant and Hegel. Recent developments in logical thought. Schiller, Russell, Couturat, Johnson.

Mill—System of Logic.

Bradley—Principles of Logic.

Hobhouse—Theory of Knowledge.

III.—ETHICS AND SOCIAL PHILOSOPHY.

Scope and Method of Ethics. Relation to other Sciences. Psychology of Ethics. Moral Judgment. Intention. Character. The Moral Ideal. Ethical Theories. Hedonism. Rationalism. Intuitionism. Idealism. Evolution and Ethics.

Moral Progress. Moral Development of the Individual. Rights and Obligations. Virtues. The Family. The State. Property. Punishment.

Metaphysics of Ethics. The Ultimate Value of the Moral Judgment. Free Will. Morality and Religion. Future Life.

Social Philosophy. Scope and History Relation to other Sciences, Society and its implications. The Social Mind Social development in general. Progress. Family. Theories of Development. Forms of Marriage. Social Progress. Laws and Lands. Society and the Individual. The nature and ideal of Society.

Kant. Metaphysical Foundation of Morals.

Green. Prolegomena to Ethics.

Moore. Principia Ethica.

Wundt. Ethics, Parts I-III.

Mackenzie. Social Philosophy.

Giddings. Principles of Sociology.

Bradley. Ethical Studies (2nd Edition); The Chapter on "My Station and its Duties."

IV.—Philosophy of Religion.

Relation to Science, Art, Psychology, Anthropology, Ethics and Philosophy. Analysis of the Religious Consciousness. The different elements of cognition and will. The feeling of the Numinous. Faith and Reason. Mysticism.

The place of tradition in religious life. The nature of religious authority. The idea of God. Origin and development. Proofs for the existence of God. Nature and attributes of God. Personality of God. Absolute and God.

Time and Eternity. Immanence and Transcendence. Incarnation. The problem of creation. Pantheism and Theism. Cosmic evolution. Miracles.

The Individual Self. Relation to God. Freedom of self and divine sovereignty. The problem of evil and suffering. Pre-existence and Immortality, Karma and Rebirth. Life Eternal.

Hegel. Philosophy of Religion, Vol. I.
Lotze. Outline of the Philosophy of Religion.
Pringle-Pattison. The Idea of God.

V.—Special Branch of Indian Philosophy.

(Optional.)

1. *Nyaya. Vaisheshika Group—*

Nyaya Sutras with Vatsyāyana's Bhāshya.
Prashastapāda's Padarthadharmasamgraha.
Viswanatha's Bhasapariccheda with Siddhanthamuktavali.

2. *Samkhya-Yoga Group—*

Ishvarakṛsna's Sāmkhyakārika with Vachaspati's Tâttakaumudi.
Samkhya Sutras with Vijnanabhikhu's Samkhyapravacanabhashya.
Yoga Sutras with Vyasabhashya and Tattavaisharadi, 1st two Chapters.

3. *Vedanta Group—*

The Vedanta Sutras with the Bhashyas of Sankara and Ramanuja, 1st two Chapters. Vedantaparibhasha.

4. *Buddha-Jain Group—*

Nagarjuna's Madhyamika Karikas with Chandrakirti's Vritti.
Dravyasamgraha and Syadvadamanjari.

5. *Translation Group—*

The Vedanta Sutras with Commentaries of Sankara and Ramanuja, 1st two Chapters. Thibaut's Translations.
Samkhya Karika with Tattvakaumudi, Jha's Translation.

Experimental Psychology.

Paper I—Physiological.

Starling—Physiology (Latest Edition)—The pages about the Nervous System.
Titchener—Text-book of Psychology.
Myers—Text-book of Experimental Psychology.
Watson—Psychology: From the Standpoint of Behaviourism.
Psychologies of 1930 (Clark University Press).
Murphy—Historical Introduction to Modern Psychology.

Paper II—Abnormal Psychology.

Prince—The Unconscious.
Jung—Analytical Psychology.
Freud—Interpretation of Dreams. Hysteria and other Psychoneuroses. Introduction to Psycho-analysis.
Hitschmann—Freud's Theory of Neuroses.
Bose—The Concept of Repression.
McDougall—Outlines of Abnormal Psychology.

Paper III—Animal Psychology.

Holmes—Evolution of Animal Intelligence.
Lloyd Morgan—Comparative Psychology.
Washburn—Animal Mind.
Alverdes—Social Life in the Animal World.
Hobhouse—Mind in Evolution.
Kohler—Mentality of Apes.

Paper IV—Child and Educational Psychology.

Koffka—The Growth of the Mind.
Munro—History of Education (Modern Period).
Thorndike—Educational Psychology (Briefer Course).
Freeman—Mental Tests.
Kirkpatrik—Fundamentals of Child Study.
Sandiford—Educational Psychology.
Holmes—Conservation of the Child.

Papers V-VIII—Practical.

Brown—Essentials of Mental Measurement, 3rd Ed. 3, Chapters I-III.
Myers—Text-book of Experimental Psychology, Vol. II.
Titchener—Students' Manuals—Qualitative and Quantitative.
Sanford—Experimental Psychology.
Whipple—Physical and Mental Tests, Vols. 1 and 2.

History.

Paper I—Selected Period of English History, 1815-1911.

J. A. R. Marriott—England since Waterloo.
Low and Sanders—Political History of England, Vol. XII.
Ramsay Muir—A Short History of the British Commonwealth, Vol. II.
Trevelyan—England in the 19th Century.

For reference—

Cambridge Modern History, Vols. X-XII.
Cambridge History of British Foreign Policy, Vols. II-III.
Meredith—Economic History of England, Book IV (Pitman).
Morley—Life of Gladstone, Books VI-X.
Trail—Social England, Vol. VI.
Asquith—Fifty years of Parliament.
Hearnshaw—Prime Ministers of the Nineteenth Century.
Morley—Cobden.
Sydney Webb—History of Trade Unionism.
Gilbert Slater—Making of Modern England.

Paper II—Selected Period of Indian History from 600 B.C. to 900 A.D.

Rhys Davids—Buddhist India (Chapters I-VI).
V. A. Smith—Early History of India (4th Edition).
Sir R. G. Bhandarkar—Early History of the Deccan. (Revised by Prof. D. R. Bhandarkar.)
Raychaudhuri—Political History of Ancient India (2nd Edition)
D. R. Bhandarkar—Asoka.
D. R. Bhandarkar—Carmichael Lectures, First Series.
Monahan—Early History of Bengal.

For reference—

Ghoshal—Hindu Revenue System.
Manu—Institutes, Chapters 2, 3, 7, 8, 10.
Kautilya—Arthasastra, Books 1, 2, 5, 6, 7, 11.
Krishnaswami Aiyangar—Ancient India, Chapter VI.
Megasthenes—Indica (Pub. by Chakravarti, Chatterjee & Co.).
Yuan Chwang—Records (Translated by Watters).
Periplus of the Erythraean Sea—Translated by Schoff.
R. C. Majumdar—Outline of Ancient Indian History and Civilisation.
Cambridge History of India, Vol. I.
N. C. Banerjee—Kautilya, Vol. I.
H. C. Ray—Dynastic History of Northern India. (Early Mediaeval Period.)

Paper III—General History of the Ancient East.

Breasted—History of Egypt.
Cambridge Ancient History, Vols. I, II and III.

For reference—

Rogers—History of Ancient Persia.
Moret—The Nile and Egyptian Civilisation.
Breasted—Development of Religion and Thought in Ancient Egypt.
Jastrow—Civilization of Babylonia and Assyria.
Olmstead—History of Assyria.
Hall—The Ancient History of the Near East. (Latest Edition.)

Paper IV—Constitutional History of England.

To be studied with special reference to the documents in—

Adams and Stepens—Select Documents of English Constitutional History.

The following books may be consulted:—

A

Stubbs—Constitutional History of England.
Hallam—The Constitutional History of England.
May—Constitutional History of England.
Maitland—The Constitutional History of England.
Adams—The Constitutional History of England.
Pollard—The Evolution of Parliament.
Baldwin—King's Council.
Tanner—English Constitutional Conflicts of the 17th Century.
Marriott—The Crisis of English Liberty.

B

Stubbs—Select Charters.
Prothero—Statutes and Constitutional Documents (1558-1625).
Tanner—Tudor Constitutional Documents.
Tanner—Constitutional Documents of the reign of James I.
Gardiner—Constitutional Documents of the Puritan Revolution, 1625-1660.
Robertson—Select Statutes, Cases and Documents.

Paper V—International Law.

Lawrence—The Principles of International Law.
Hall—International Law.
Pitt Cobett—Leading Cases on International Law, 2 Vols. (New Ed.).
Pollock—League of Nations.

Books for reference—

P. N. Banerjee—International Law in Ancient India.
Garner—Development of International Law in the 20th Century.
Hudson—Current International Co-operation.
British Year Book of International Law.

Papers VI and VII.

Any one of the following subjects:—

(i) History of Islam.

Muir—Caliphate: Rise, Decline and Fall.
Zeydan—Umayyads and Abbasides.
Khuda Bukhsh—Islamic Civilisation.
Khuda Bukhsh—Orient under Caliphs.
Khuda Bukhsh—Politics in Islam.
Ameer Ali—History of the Saracens.
Hitti—Origins of the Islamic State (Columbia University Press).
Vincent Smith—Akbar.
Sarkar—History of Aurangzib.
Cambridge History of India, Vol. III.

For reference—

Thomas—Chronicles of the Pathan Kings of Delhi.
Goldziher—Mohamed and Islam (Dr. Seelye) (Yale University Press).
Gibbon—Decline and Fall of the Roman Empire, Chapters, 50-52, 56-59, 64, 65, 67, 68.
Aghnides—Mohammedan Theories of Finance (Columbia University Press).
Cambridge Mediaeval History, Volume II. Chapters 10-12.
Elliot and Dawson—History of India.
Moreland—India at the Death of Akbar.
Moreland—From Akbar to Aurangzib.
Rogers and Beveridge—Tujuk-i-Jehangiri (Eng. Translation).
Irvine—Later Moghuls.
Beveridge—Memoirs of Babar.
Humayun Nama of Gulbadan Begum.
Moreland—Agrarian System of Moslem India.

(ii) Special Period of Indian History.

A

One of the following alternative courses:—

History of Bengal—1757-1793.
Mill and Wilson—History of British India.
Monckton Jones—Warren Hastings in Bengal.
Forest—Selection from the State Papers of the Governors-General of India (Warren Hastings).
R. C. Dutt—Economic History of India under Early British Rule
Ascoli, F. D.—Early Revenue History of Bengal and the Fifth Report.
Fifth Report of the Select Committee on the Affairs of the East India Company, Bengal Presidency, including Grants' Analysis, edited by Firminger.
J. C. Sinha—Economic Annals of Bengal.
Cambridge History of India, Vol. V.

For reference—

Hunter—Annals of Rural Bengal.
Golam Hussein Khan—Siyar-ul-Mutakherin.
Verelst—View of English Government in Bengal.
Bolts—Considerations of Indian Affairs.
Forrest—Life of Clive.
Gleig—Warren Hastings.
Burke—Speeches on the Impeachment of Warren Hastings.
Cowell—History of the Courts and Legislative Authorities in India.
Stephen—Nuncomar and Impey.
Beveridge—Trial of Nandakumar.
Busteed—Echoes of Old Calcutta.
Long—Selections from the unpublished Records of Government.
Carey—Good Old Days of John Company.
Ross—Correspondence of Charles, First Marquis Cornwallis.
Ramsbotham—Studies in the Land Revenue History of Bengal.
Forrest—Selections from the State Papers of the Governors-General of India (Cornwallis).

B

History of the Rajputs (from the advent of the Muhammadans in India to the treaty with the English, 1818).

English.

Rajputana Gazetteer—Edited by Major Erskine. 1908-1909.
Haravilas Sarda—Rana Kumbha.
Rana Sanga.
Brooke, J. C.—History of Mewar.
Stratton, J. B.—Chitor and the Mewar Family.
Lala Sitaram—History of Sirohi.
H. C. Ray—Dynastic History of N. India (Early Mediaeval Period).

For reference—

Tod—Annals and Antiquities of Rajasthan (Ed. by Crooke).
Tod—Travels in Western India.
Elliot and Dawson—History of India.
Cambridge History of India, Vol. III.

Hindi.

Pandit Gaurisankar Ojha—History of Sirohi.
Tod—Rajasthan, edited by Gaurisankar Ojha.
Muta Nensi Khyata.
History of Jaisalmer (published by the Jaisalmer Darbar).
Devi Prasad—History of the Kings of Jaipur and Jodhpur.
History of Bikaner (Nagari Pracharini Sabha).

C.—History of the Mahrattas.

For study—

Grant Duff—History of the Mahrattas (Oxford University Press).
Ranade—Rise of the Maratha Power, Vol. I.
Ranade—Introduction to the Peshwars' Diaries.
S. N. Sen—Administrative System of the Marathas.
S. N. Sen—Military System of the Marathas.

For reference—

S. N. Sen—Documents and Extracts relating to Maratha History, Vol. I, Siva Chhatrapati (Calcutta University).
Vol. II, Foreign Biographies of Sivaji.
Rawlinson & Patwardhan—Source book of Maratha History, Vol. I.
Sardesai—Main currents of Mahratta History.
Malcolm—Memoir of Central India, Vol. I, Chapters 5, 6 and 7.
Sarkar—Sivaji and His Times.
Forrest—Selections from the Letters, Despatches, and Other State Papers preserved in the Bombay Secretariat—Maratha Series.
Owen—Selections from Wellington's Despatches.
Franklin—Shah Alum.
Elliot and Dawson—History of India, Vols. VII and VIII.
Aitchison—Treaties, Engagements and Sunnuds relating to India.
Kincaid and Parasnis—History of the Maratha People.
Siyar-ul-Mutakharin—Chapter on Maratha Invasions of Bengal.

D.—History of the Sikhs.

Cunningham—History of the Sikhs.
Macauliffie—The Sikh Religion.
Mushan Fani—Dabistan-i-Mazahib, Vol. II (Translated by Troyer and Shea).
Irvine—Later Mughals, Vol. I.
Gough and Innes—The Sikhs and the Sikh Wars.
Bell—Annexation of the Punjab.
Teja Singh—Growth of Responsibility in Sikhism.

For reference—

M. Latif—History of the Punjab.
Gokulchand Narang—The Transformation of Sikhism.
Nepel Griffin—Ranjit Singh.
Baird—Private Letters of the Marquis of Dalhousie.
Teja Singh—Asa-di-Var.
Despatch of Gough and Hardinge.
Prinsep—Origin of the Sikh Power in the Punjab.
Malcolm—Sketch of the Sikhs.
Osborne—Court and Camp of Ranjit Singh.
Aitchison—Treaties, Engagements and Sunnuds relating to India.
Honigberger—Thirty-five Years in the East.
Carmichael Smyth—The Reigning Family of Lahore.

(iii) The Constitutional History of British India and the British Dominions.

To be studied with special reference to the documents in—

Keith—Selected Speeches and Documents on British Colonial Policy, Vols. I and II, 1763-1917.
Lord Durham's Report, Edited by Lucas.
Egerton and Grant—Selected Speeches and Despatches relating to Canadian Constitutional History.
Eybers—Selected Constitutional Documents Illustrating South African History, 1795-1910.
Egerton—Federation and Unions within the British Empire.
P. Mookerjee—Indian Constitutional Documents.
Keith—Speeches and Documents on Indian Policy, Vols. I and II, 1750-1921.
Montagu-Chelmsford Report.
Reforms Enquiry Committee Report, 1924.

The following books may be consulted:—

Todd—Parliamentary Government in the British Colonies.
Poley—Federal Systems of the United States and the British Empire.
Egerton—A Short History of the British Colonial Policy.
Keith—Responsible Government in the Dominions (latest edition).
Porritt—Evolution of the Dominion of Canada.
Moore—The Constitution of the Commonwealth of Australia.
Brand—The Union of South Africa.
Bryce—Modern Democracies.
Ilbert—Government of India.
Cowell—Courts and Legislative Authorities in India.
Keith—Sovereignty of the British Dominions.
Butler Committee Report.
Report of the Indian Central Committee, 1929.

Barra O'Briain—The Irish Constitution
A. K. Ghosh—Public Administration in India.
Horne—Political system of British India.
Whyte—India—A Federation?
All Parties Conference Report, 1928.
Simon Commission Report.
Proceedings of the Round Table Conference, 1930-31

(iv) Modern History of China and Japan.

(China.)

Sih-Gung-Cheng Modern China—A Political Study.
Gowen and Hall—An Outline History of China.
Bland Backhouse—China under the Empress Dowager.
H M. Vinacke—Modern Constitutional Development in China.
S. H. F. MacNair—Modern Chinese History, Selected Readings.
Willoughby—Foreign Rights and interests in China, 2 Vols. (New Ed.).
Vinacke, H. M. History of the Far East in Modern Times.
Tanj Leang-Li The Inner History of the Chinese Revolution.

(Japan.)

W. M. McGovern—Modern Japan, its Political, Military and Industrial Organization.
George Uyahara—Political Development of Japan, 1867, 1909.
Count Okuma—Fifty-years of New Japan.
Porter—The Full Recognition of Japan
Hishida—The International Policy of Japan.
MacLaren—Political History of Japan during the Meiji Era.

(v) Economic History of England and India.

Cunningham—Growth of English History and Commerce
Traill Social England, Vol. VI, Economic Section.
Buxton—Finance and Politics.
Ashley—Economic Organisation of England
R. C. Dutt—Economic History of India under Early British Rule

India in the Victorian Age.

Ascoli—Early Revenue History of Bengal.
J. C. Sinha—Economic Annals of Bengal.
Report of the Indian Industrial Commission.
Imperial Gazetteer of India, Vols. III and IV (Economic portion).
History of Commerce in India, 1865-1918.
Lapson—Economic History of England.
Meredith—Economic History.
Bland—Select Documents.
Webb—History of Trade Unionism.
Cole, G. D. H.—Short History of the British Working Classes.
V Anstey Economic Development of India

(vi) Comparative Politics.

Bryce American Commonwealth.

Modern Democracies.

Warde Fowler The City-State of the Greeks and Romans.
Maine Ancient Law (Chapters 1, 2, 3 and 5), Ed. Pollock.
Sidgwick—Development of European Polity.
Woodrow Wilson—Constitutional Government.
Lowell—Governments in France, Italy and Switzerland.
Vincent—Switzerland.
Ogg—Government of Europe.
Ghoshal—Hindu Political Theories.
Greenidge—Greek Constitutional History

Roman Public Life.

Woodrow Wilson—Congressional Government.
Munro—Governments of Europe.

For reference—

Coulanges—Ancient City (Tr. Small).
Freeman—Comparative Politics.
Kautilya—Arthasastra.
Aristotle—Constitution of Athens.
Zimmern—Greek Commonwealth.
Lowell—Government in England.
Temperley—Second Chambers.
Poincare—How France is Governed.
Bodley—France.
Garlanda—Italy.
Allen Smith—Spirit of American Government.
Marriott—Second Chamber.
Marriott—Mechanism of the Modern State.
Gustave Glotz—The Greek City and its Institutions (History of Civilisation Series).
Leon Homo—Roman Political Institutions (History of Civilisation Series).

(vii) Modern Europe, 1815-1904.

Hazen, C. D.—Europe since 1815.
Rose, J. Holland—Development of European Nations.
Bourgeois, E.—History of Modern France.
Ward, A. W.—Germany.
King, Bolton—History of Italian Unity.
Marriott, J. A. R.—The Eastern Question.
Gooch—Modern Europe, 1878-1915.
Skrine—The Expansion of Russia.
Leger—A History of Austria-Hungary.
Mowat—The Concert of Europe.

For reference—

Webster, C. K.—The Congress of Vienna.
Simpson, F. A.—Louis Napoleon and the Re-settlement of the French Empire.
Guedalla, P.—The Second Empire.
Fisher, H. A. L.—Bonapartism.
Grant Robertson—Bismark.
Cesaresco, Countess—Cavour.
King, Bolton—Mazzini.
Cambridge History of British Foreign Policy (Vols. II and III).
Cambridge Modern History, Vols. X, XI and XII.
Kirkup—History of Socialism.

(viii) Anthropology.

Paper VI.

Outlines of Physical Anthropology.

Haddon—Races of Man.
Chanda—The Indo-Aryan Races.
Giuffrida-Ruggeri—Systematic Anthropology of Asia (Tr. Chakladar).
Pittard—Race and History.

For reference—

Boule—Fossil Men.
Dixon—Racial History of Men.
Denikker—The Races and Peoples of the World.

Paper VII.

Outlines of Cultural Anthropology.

Risley—The Peoples of India.
Mitra—Pre-Historic India.

For reference—

Wissler—An Introduction to Social Anthropology.
Kroeber—Anthropology.
Census of India, 1911 and 1921. Chapters on Caste and Occupation.

ANCIENT INDIAN HISTORY AND CULTURE.

(Compulsory Papers.)

(1) General History of Vedic and Epic India.

Cambridge History of India, Vol. I, Chapters III, IV, V, IX, X and XI.

Hopkins—Social and Military Position of the Ruling Caste in Ancient India.

Zimmer—Altindisches Lebens, Book I, Chapter I and Book II, Chapter I.

Raychaudhuri—Political History of Ancient India (2nd ed.), Part I.

Das—Rig Vedic India.
Das—Rig Vedic Culture.
Sreenivas Iyenger—Life in Ancient India.
Winternitz—A History of Indian Literature, Vol. I (Cal. Univ.).

For reference—

Macdonell and Keith—Vedic Index.
Kaegi—Rig Veda.
Jacobi—Das Ramayana.
Hopkins—The Great Epic of India.
D. R. Bhandarkar—Carmichael Lectures, First Series (1918).
Muir—Sanskrit Texts, Vol. V.
Pargiter—Ancient Indian Historical Tradition.

(2-3) Political History of the post-Epic Period.

V. A. Smith—Early History of India (4th edition).
D. R. Bhandarkar—Asoka.
Bombay Gazetteer, Vol. I.
Raychaudhuri—Political History of Ancient India (2nd edition), pages 59-389.
D. R. Bhandarkar—Carmichael Lectures, First Series, 1918.
Stein—Rajatarangini (Introduction).
Monahan—Early History of Bengal.
Inscriptions of the Kings of Ancient Bengal.
Cambridge History of India, Vol. I, Chapters II, VII, XIII-XXIV.
H. C. Ray—Dynastic History of N. India. (Early Mediaeval Period.)

For reference—

Radha Kumud Mukherjee—Harsa.
V. A. Smith—Asoka (3rd edition).
Imperial Gazetteer—Indian Empire, Vol. II.
Krishnaswami Aiyanger—Contribution of Southern India to Ancient Indian Civilisations.
R. C. Majumdar—Gurjara-Pratiharas.
R. C. Majumdar—Early History of Bengal.
R. C. Majumdar—Harshavardhana.
Pargiter—Dynasties of the Kali Age.
B. C. Law—Mid-Indian Kshatriya Tribes.
Hultzsch—Corpus Inscriptionum Indicarum, Vol. I, Introduction.
Girindramohan Sarcar—Early History of Bengal. (Sena period.)

(4) Historical Geography of Ancient India.

Cunningham—Ancient Geography of India. (Published by Chakravarty Chatterjee & Co.)
Watters—On Yuan-Chwang.
Fleet—Topographical List of the Brihat Samhita, Indian Antiquary, 1893 (pages 169-195).
Pargiter—Translation of the Markandeya Purana (Bhubanakosa only).

For reference—

Fa Hien—Travels.
Ptolemy (Ed. Majumdar)—Geography of India.
Macdonell and Keith—Vedic Index (Geographical portions).
Foucher—Notes on the Geography of Gandhara.
Sir John Marshall—Guide to Taxila.
Nundolal De—Geographical Dictionary of Ancient and Mediaeval India.

Schoff—Periplus of the Erythræan Sea.
Sylvain Lévi—Pre-Aryan and Pre-Dravadian in India (Tr. P. C. Bagchi).
H. C. Raychaudhuri—The Mountain System of the Puranas.
H. C. Raychaudhuri—India in Puranic Cosmography.

Optional Papers.

I. ARCHÆOLOGY (A).

Epigraphy.

(1)

Bühler—Chart.
Inscriptions of Asoka.
Inscriptions of Kharavela and the Sungas.

(2)

Inscriptions of Satavahana and Indo-Scythian Kings.
Inscriptions of the Imperial Gupta Dynasty.

(3-4) Numismatics.

V. A. Smith—Catalogue of Coins in the Indian Museum (up to the end of the Gupta period).
Percy Gardner—Catalogue of Indian Coins in the British Museum
Rapson—Catalogue of Coins, Andhras, Western Kshatrapas, etc.
Allan—Catalogue of Coins, Gupta Dynasties.
Whitehead—Catalogue of Coins of the Punjab Museum, Lahore, Vol. I.
Bhandarkar—Carmichael Lectures, Second Series.

ARCHÆOLOGY (B).

(1-2) Fine Arts and Iconography.

Fine Arts.

G. N. Banerjee—Hellenism in Ancient India.
Faure—History of Art.
Rothenstein and Codrington—Ancient India.
Coomaraswami—History of Indian and Indonesian Art.

Iconography.

Grünwedel—Buddhist Art in India.
Foucher—Beginnings of Buddhist Art.
Gopinath Rao—Elements of Hindu Iconography.
B. T. Bhattacharyya—Indian Buddhist Iconography.
Barua and Sinha—Barhut Inscriptions.

For reference—

Coomaraswami—Dance of Siva.
V. A. Smith—History of Fine Art in India and Ceylon.
Havell—Indian Sculpture and Painting.
Nag—Greater India.
O. C. Gangoolv—South Indian Bronzes.
Kramrisch—Vishnudharmottaram.
P. Brown—Moghul Painting.
Influence of Indian Art (India Society).
Bhattasali, N. K.—Iconography of the Brahmanical and Buddhistic Sculptures in the Dacca Museum.

(3-4) Ancient Architecture.

Fergusson—History of Indian and Eastern Architecture, Vols. I and II.
Havel—Ancient and Mediaeval Architecture of India.

For reference—

M. M. Ganguli—Orissa and her Remains.
G. Jouveau-Dubreuil—Architecture of Southern India.
H. Cousens- Architecture of Western India.
P. K. Acharyya—Dictionary of Hindu Architecture.
P. K. Acharyya—Treatise on Silpasastra.
H. Cousens—Architecture of Sindh.

II.—SOCIAL AND CONSTITUTIONAL HISTORY.

Paper V.—Social Life including Manners, Customs and Ceremonies.

Zimmer—Altindisches Leben.
A. C. Das—Rigvedic Culture.
Cambridge History of India, Vol. I, Chapters dealing with Social History.
Manu—Institutes.
Fick—Die Sociale Gliederung in Nordöstlichen Indien (translated by S. Maitra).
Barnett—The Antiquities of India.
H. C. Chakladar—Studies in the Kama Sutra of Vātsāyana.
Rhys Davids—Buddhist India (Chapters IV and XIII).
Imperial Gazetteer (Indian Empire), Vol. I, Chapter VI.

For reference—

Macdonell & Keith—Vedic Index.
Dharmasutras of Gautama, Apastamba, Baudhāyana and Vasishtha.
Grihya sutras of Gobhila, Apastamba, Sānkhyāyana, Asvalāyana, Pārashkara, Khādira.
Alberuni—India (omitting the Mathematical details), Translated by Sachau.
Kautilya's Arthasastra, Book III, Chapters 2, 3 and 13.
Watters—On Yuan Chwang, Chapter V.

Paper VI.—Economic Life.

Cambridge History of India, Vol. I, Chapter VIII.
N. C. Banerjee—Economic Life and Progress in Ancient India (Vol. I).
Rhys Davids—Buddhist India.
Schoff—Periplus of the Erythræn Sea.
Kautilya's Arthasastra—Book II, Chapters 12-17, 19, 23 and 24. Book III, Chapters 13 and 14. Book IV, Chapters 1 and 2. Book VII, Chapters 11 and 12.
H. C. Ray—Economic Policy and Function of the Kautilyan State.

For reference—

G. N. Banerjee—India as known to the Ancient World.
Kennedy—Early Commerce of India with Babylon.
Hopkins—India Old and New (Chapters dealing with Economic topics).
Majumdar, R. C.—Corporate Life in Ancient India, Ch. I.
Ghoshal—Hindu Revenue System.

Paper VII.—Administration.

Kautilya—Arthasastra.
Mahābhārata—Santiparva, Sections 56-157.
N. C. Banerjee—Development of Hindu Polity and Political Theories.
N. C. Banerjee—Kautilya, Vol. I.
Megasthenes—Indica (Portions dealing with administration).
S. K. Aiyangar—Ancient India, Ch. VI.

For reference—

Rangaswami Aiyangar—Ancient Indian Polity.
P. N. Banerjee—Public Administration in Ancient India.
R. C. Majumdar—Corporate Life in Ancient India.
Ghosal—Hindu Political Theories.
R. K. Mukherjee—Local Government in Ancient India.
Sarkar—Political Institutions and Theories of the Hindus.
Jayaswal—Hindu Polity.
N. Law—Aspects of Ancient Indian Polity.
D. R. Bhandarkar—Carmichael Lectures, First Series (1918).

Paper VIII.—Ethnology (with special reference to India).

Haddon—Races of Man.
Risley—The Peoples of India.
Chanda—The Indo-Aryan Races.
D. R. Bhandarkar—Foreign Elements in the Hindu Population. (Indian Antiquary, 1911, pp. 7-37.)

For reference—

Lowie—Primitive Society.
Cambridge History of India, Chapters I, II, XXIV and XXV.
E. Pittard—Race and History.
Giuffrida Ruggeri—Systematic Anthropology of Asia (Tr. Chakladar).
Mitra, P.—Pre-historic India (2nd Ed.).
V. Gordon Childe—The Aryans.
Buxton—Peoples of Asia.

III. Religious History.

(General.)

Eliot—Hinduism and Buddhism, Vols. I and II.

For reference—

Barua—A History of Pre-Buddhistic Indian Philosophy.
Hopkins—Ethics of India.
Barth—Religions of India.
Gupte—Hindu Holidays and Ceremonies.
Hopkins—Religions of India.

(*1*) *Vedic Religion.*

Keith—Religion and Philosophy of the Vedas and Upanishads, Vols. I and II.
Das—Rig-Vedic Culture.

For reference—

Macdonell—Vedic Mythology.
Hillebrandt—Ritual Litteratur, Chapters I, III and IV.

(*2*) *Epic and Puranic Religion.*

R. G. Bhandarkar—Vaisnavism, Saivism, and Minor Religious Systems (omitting XVI—XXV of Part I).
Hopkins—Epic Mythology (Chapters relating to the Devas).
Raychaudhuri, H. C.—Early History of the Vaisnava Sect.

For reference—

Hirananda Shastri—Origin and Cult of Tara.
Chanda—(Memoir of A. S. I.) Archæology and Vaishnava Tradition.
Farquhar—An Outline of the Religious Literature of India.
Dowson—A Classical Dictionary of Hindu Mythology.
Kingsbury & Philip—Hymns of the Tamil Saivite Saints.
Radhakrishnan—Indian Philosophy, Vol. II (Chapter X). The Saiva, the Sakta and the Later Vaisnava Theism.
Carpenter—Theism in Mediaeval India.
Gopinath Rao—Hindu Iconography, Vol. 2 (Introduction only).
Barnett—Hindu Gods and Heroes.
Schrader—Introduction to the Pancharatra and Ahirbudhnuya Samhita.
Woodroffe—Shakti and Shakta.
Garbe—Introduction to the Bhagavad Gita (Tr. Udgikar).

(*3*) *Buddhism.*

Rhys Davids—American Lectures.
Kern—Manual of Buddhism.
Oldenberg—Buddha.
Dutt—Early History of the Spread of Buddhism and the Buddhist Schools.
Dutt—Aspects of Mahayana Buddhism.
Kimura—Historical Study of the terms Mahayana and Hinayana, and Origin of Mahayana.

For reference—

Mrs. Rhys Davids—Buddhism.
Spence Hardy—Manual of Indian Buddhism.
Warren—Buddhism in Translations.
Stein—Serindia.
Suzuki—Outlines on Mahayanism.
Poussin—Buddhism.
I-tsing—Records of the Buddhist Religions (Takakusu).
Fa-Hien—Travels (Legge).
Barua—Ajivikas.
Winternitz—History of Indian Literature, Vol. II.

(4) Jainism.

Jacobi—Introduction and Translation of the Jaina Sutras, Parts I and II (Sacred Books of the East, Vols. XXII, XLV).

R. G. Bhandarkar—Report on the Search for Sanskrit Manuscripts in the Bombay Presidency during the year 1883-84, pages 91-157.

Bühler—On the Indian Sect of the Jainas, translated and edited with an outline of Jaina Mythology by Burgess.

Barua—The Ajivikas.

For reference—

Vijnanand Suri—Sri Jainatattvadarsa.
Bib. India Series—Uvasagadasao.

IV.—INDIAN ASTRONOMY AND MATHEMATICS.

(1) Mathematics.

Selected texts on Mathematics for critical, historical and comparative study:—Sulba Sutras.

Thibaut—On the Sulba Sutras (J. A. S. B. Vol. 44). The Pandit, Vols. 9 and 10 (Old Series); Vols. 1 and 4 (New Series).

A. Bürk. Das Apastambas Sulba Sutra (J. D. M. G., Vols. 55 and 56).

Lilavati and Bijaganita—Bhaskara. Edited by Pt. Sudhakar Dvivedi (Tr. Colebrooke).

(2) Mathematics.

History of Mathematics, with special reference to the works of Aryyabhata, Varaha Mihira, Brahmagupta, Mahavira, Sridhara and Bhaskaracharyya.

The following books are recommended—

Aryyabhatiyam. Ganita—Aryabhata, trans. Mr. P. C. Sengupta (Journal of the Department of Letters, Vol. XVI).

Brahmasphuta-Siddhanta. Chapters XVI and XVIII. Edited by Pandit Sudhakara Dvivedi.

Lilavati and Vijaganita. Edited by Pandit Sudhakara Dvivedi (Tr. Colebrooke), or edited by Pandit Radhaballabh Jyotishtirtha, or edited by H. C. Banerjee.

Bakshali Mathematics—B. B. Dutt (B. C. M. S. Vol. XXII, No. I).

Mahavira's Ganita Sara Samgraha. Edited by Rangacharya (Madras).

Colebrook—Translation of the Lilavati and Vijaganita, and the Chapter on Mathematics in the Brahmasphutasiddhanta.

Smith, D. E.—Hindu Arabic Numerals.

(3) Astronomy.

Selected text on Astronomy for critical, historical and comparative study.

Suryya Siddhanta.

Editions and Translations recommended—

Suryya Siddhanta—With Ranganath's Commentary.

Suryya Siddhanta—Translated by Burgess and Whitney (J. Am. Orient Society, Vol. VI).

(4) Astronomy.

History of Astronomy, with special reference to Jyotisha-Vedanga, Jaina Astronomy, the (Modern) Suryya Siddhanta, and to the works of Aryyabhata, I, Varaha Mihira, Brahmagupta, Munjala and Bhaskaracharyya.

The following books are recommended—

Text-books.

Yajusha Jyotisham—By Pandit Sudhakara Dvivedi.

Thibaut—Contributions to the Study of the Jyotisha-Vedanga (J.A.S.B., 1877).

On the Suryyaprajnapati (J. A. S. B., 1880).

Aryabhatiyam—Aryabhata. Trans. by Mr. P. C. Sen Gupta.

Pancha-Siddhantika—Translated by Dr. Thibaut and Pandit Sudhakara Dvivedi. Aryabhata, the Father of Indian Epicyclic Astronomy by P. C. Sen Gupta.

Brahmasphuta-Siddhanta—Edited by Pandit Sudhakara Dvivedi.

Bhaskara Siddhanta Siromani—Edited by Pandit Bapudev Shastri or Pandit Bapudev Shastri and Wilkinson.

Brahmagupta Khandakhadya Karanam—Edited by Pandit Babua Misra.

For reference—

Bentley—Hindu Astronomy.

Brenand—Hindu Astronomy.

Playfair—(1) On the Astronomy of the Brahmans. (2) On the Trigonometry of the Brahmans (Collected Works, Vol. III).

Whitney—Oriental and Linguistic Studies (Series II, 1875).

The Twelfth Essay—The Lunar Zodiac; on the views of Biot and Weber respecting the relations of the Hindu and Chinese systems of asterisms with an addition on Müller's views, etc.

Max Müller—On Ancient Hindu Astronomy and Chronology (preface to Rig Veda, Vol. 4).

Tilak—The Orion.

Tilak—The Arctic Home of the Vedas.

Davis, S.—On Hindu Astronomy (As. Res., Vol. II).

V. ANTHROPOLOGY.

Paper V.

Physical Anthropology, including Origin and Antiquity of Man:—

Haddon—Races of Man.

Giuffrida Ruggeri—Systematic Anthropology of Asia (Translated by Chakladar).

Chanda—The Indo-Aryan Races.

Pittard—Race and History.

For reference—

Boule—Fossil Men.

Dixon—Racial History of Man.

Buxton—Peoples of Asia.

Paper VI.

Social Anthropology:—

Lowie—Primitive Society.

Lowie—Primitive Religion.

Wissler—Introduction to Social Anthropology.

For reference—

Goldenweiser—Early Civilization.

Paper VII.

Pre-historic Archæology and Technology:—

Morgan—Pre-historic Man.

Kroeber—Anthropology.

Mitra—Pre-historic India.

For reference—

Torres Straits Expedition—Arts and Crafts, Vol. IV.

Paper VIII.

Indian Ethnography, with special reference to Bengal and Assam:—

L. K. A. Iyer—Lectures on Ethnography.

Risley—The Peoples of India.

S. C. Ray—The Birhors.

Baine—Ethnography.

Census Report of India, 1911 and 1921.

T. P. Mills—Ao Nagas.

For reference—

Census of India, 1911 and 1921—Chapter on Caste and Occupation.
Generalised accounts of the Tribes and Castes of the Bengal Presidency from Risley's Tribes and Castes of Bengal, Ethnographical Glossary of the Tribes and Castes of Assam.

Note.—Candidates are recommended to use the following as a preliminary course:—

Duckworth—Pre-Historic Man.
Haddon—Wandering of Peoples. History of Anthropology.
Tylor—Anthropology.

Anthropology.

Paper I—Physical Anthropology (Palæontological and Zoological).

Introduction—Classification and general anatomy of the Primates—Comparative anatomy of Anthropoidae and Hominidae—Evolution of the brain—Evolution of the human cranium—Fossil Simians—Fossil Men—Pithecanthropus—The Weimar fossils—Mauer jaw—Piltdown man—The Neanderthals—Men of the Reindeer age—The Azilian races—Osteological remains from Asia, Australia, Africa and America.

Books recommended:—

W. H. L. Duckworth—Morphology and Anthropology, Vol. I (2nd edition).
Boule—Fossil Men.
Wood Jones—Man's place in Nature.

Paper II—Ethnology.

Introduction. Race—Definition of Race—Basis of classification of human races—The history and distribution of man in Asia, Europe, Africa, America and Oceania—Considerations of topography and its bearings on the movement of peoples—The main linguistic and cultural divisions—History of Anthropology.

Books for study—

Keene, A. H.—Man: Past and Present.
A. C. Haddon—Races of Man.
Ruggeri—Systematic Anthropolgy of Asia.

For reference—

Pittard—Race and History.
Ripley—Races of Europe.
Dixon—Racial History of Man.
Seligmann—Races of Africa.

Paper III—Pre-historic Archæology and Technology.

The great Ice Age—The Eolithic problem—Palæolithic and Neolithic Ages—Copper, Bronze and early Iron Ages—Prehistoric metallurgy—Prehistoric India—Survivals—Early Civilization—Principles of cult origins and distribution—Technology.

Origin and distribution of specific cultural traits in prehistoric and among primitive peoples—boomerang, bow and arrow, spear, hoe, plough, loom, pottery, basketry.

Books recommended:—

G. G. Maccurdy—Human origins.
P. Mitra—Prehistoric India.
V. G. Childe—The most Ancient East.

Paper IV—Social Anthropology.

Origin of Human Society—Human Society not an outgrowth of animal Society—Social Organization—Marriage. Family, clan, tribe, and caste. Kinship-usages. Father-right and mother-right. Position of women—Property and inheritance—Rank and social classes—Magic and Religion—Totemism—Government—Law and Justice—Ethic.

Books recommended for study:—

W. H. R. Rivers—Social Organisation.
R. Lowie—Primitive Society.
J. H. Leuba—The Psychological Origin and Nature of Religion. (Religions—Ancient and Modern Series.)

For reference—

J. G. Frazer—Golden Bough (Abridged Edition).
E. Westermarch—History of Human Marriage (Abridged Edition).
L. K. A. Iyer—Mysore Tribes and Castes (Vol. II, pages 408-488).
E. Durkheim—Elementary forms of Religious Life.

GROUP A.

Paper V—Advanced Physical Anthropology.

Organic Evolution and adaptation—Adaptation to Environment—Variations—Forms of variations—General observations on Heredity and Eugenics (very brief)—Trend of human evolution—Influence of environment on the physical structure of Man.

Inter-racial problems—Race contact—Race-miscegenation—Its influence on the nationality and race domination—Race-degeneration—Racial character and Natural selection.

Books recommended:—

E. G. Conklin—Heredity and Environment.
L. F. Pitt Rivers—The clash of culture and contact of races.

Paper VI—Racial History.

Racial history of Asia with special reference to India and intensive study of a particular part of India—Importance of Asia in the racial history of man—Anthropometry and statistical treatment of anthropometric data—Racial variations in the human skeleton.

Books recommended:—

Dudley Buxton—Peoples of Asia.
R. Chanda—Indo-Aryan Races (Chapters I and II)
M. H. Risley—The Peoples of India, Chapter I only.
A. Hrdlicka—Anthropometry.

Castes Prescribed for 1933—Brahmins, Kayasthas and Vaidyas of Bengal.

GROUP B.

Paper V—Social Anthropology (Advanced).

Intensive study of social institutions—The problems of early humanity—The human group—Mental advance—A tool-using society—Evolution of societies—Acquired characteristics of man and woman—Their mutual relations in hunting, pastoral and agricultural societies. Consequent change in character and institutions—The social instinct and its growth—Family and the evolution of motherhood—The family in father-right and mother-right fatherhood in mother-right—The complex of mother-right. The family as the cradle of nascent culture—Marital relations—Group marriage and sexual communism—Status of women in primitive society—Primitive division of labour between the sexes—The persistence of family ties in Man—Plasticity of human instincts—Father-right and Mother-right.

Culture-definition—Transition from nature to culture—Culture diffusion—Individual and the race in culture—Environment. Political organization—Magic and religion—Anthropomorphism and the higher gods.

Note.—Lectures must be delivered as far as possible with reference to instances from the Cultural History of India.

S. Freud—Totem and Taboo.
B. Malinowski—Sex and Repression in Savage Society.
Bartlett—Psychology and Primitive Culture.
C. Wissler—Introduction to Social Anthropology.

Paper VI—Social Anthropology (Advanced).

An intensive study of any one of the following primitive culture zones of India with special reference to one or more tribes of the zone as may be prescribed from time to time.

(1) Assam, (2) Chittagong and Chindwin basins, (3) Chota Nagpur, Orissa and the Central Provinces, (4) Cis-Himalayan regions, (5) North-western Frontier tracts, (6) South India, (7) Western India including the Presidency of Bombay, Malabar, Cochin, Travancore and South Canara.

Syllabus:—Physical environment—General geography of the area (very brief outline)—Ethnic relations—Racial and cultural History of the people inhabiting the area. Material culture—Society—Religion and Mythology and Language—The present social and economic conditions of the people in relation to foreign contact.

Ethnology of Santals.

GROUP C.

Paper V.—Social Anthropology (Religions).

A brief survey of origins of religions and religious institutions of the world—Religion and magic—Religion among tribal communities—Religion and Mythology—The life of the dead—The origin of gods—Sacred stones—The gods of Egypt—The gods of Israel—Human gods—Formation of gods—Gods of cultivation—Sacrifice and sacrament—What is mystery religion—Religion and morals. Spirits and gods—Rise of monotheism—The Hindu Trinity—The Buddhistic Trinity—The Christian Trinity—The reality of religion.

The main religious systems and sects in India—Popular Hinduism—Influence of Buddhism, Islam and Christianity in India—Modes of worship.

A. B. Keith—Religion and Philosophy of the Vedas and the Upanishads.

Barth—Religions of India.

Farquhar, J. N.—Religious Literature of India.

E. Carpenter—Comparative Religion (Home University Series).

Paper VI—Social Anthropology (Society).

Socio-religious Institutions of the Primitive society in India. Modern theories and ancient ideals of Indian society—Detailed study of caste—Caste formations and caste regulations—History of the development of caste, and the various theories connected with it.

Family organization—Marriage—Status of women—Hetaira—Family and social rites—Social customs—Property and Inheritance.

Imperial Gazetteer, Introductory volumes Volume I, Census Reports of India, 1901, 1911 and 1921 (Chapters on Society and Religion).

Social history and divisions among the Mahomedans.

Paper VII.

Practical and Field work:—

Practical knowledge of Human and Anthropoid osteology. Anthropometric observations and measurements as recommended by the British Anthropometric committee. Osteometric measurements as recommended by the same committee.

Students are required to measure 25 men and 3 skeletons. Laboratory book to be kept.

Details of work is given in Syllabus as adopted by the Board of Higher Studies.

Paper VIII.

Identification of stone objects and implements and technological specimens. Students are required to submit a report on a selected topic in Social anthropology prescribed by the Lecturers or a report on the specimens of the Ethnographic gallery of the Indian Museum.

Details of work is given in Syllabus as adopted by the Board of Higher Studies.

Economics.

FOR GROUPS A AND B.

Paper I.

General Principles of Economics.

A. Marshall—Principles of Economics.
Taussig—Principles of Economics.
Hawtrey—Currency and Credit.
Pigou—Economics of Welfare.

Paper II.

General Principles of Political Science.

Willoughby. The Nature of the State.
Laski. Grammar of Politics.
Delisle Burns. Political Ideals.
Hobhouse. Social Evolution and Political Theory.

For reference:

Bryce. Modern Democracies.
Merriam Barnes and others. A History of Political Theories: Recent Times.
Delisle Burns. Democracy.

Paper III.

Public Administration, including Administration of India.

Marriott. The Mechanism of the Modern State.
Munro. Governments of Europe.
Dicey Law of the Constitution.
Government of India Act of 1919 and the Rules made thereunder.
Ilbert. Government of India: Historical Introduction.
Bengal Local Self-government Act.
Bengal Village Self-government Act.
Bengal Municipal Act.
Calcutta Municipal Act of 1923 (Constitutional portion only).
Round Table Conferences Reports of Sub-Committees. Government of India's Despatch on proposals for Constitutional Reforms.

For reference:

Sir Sivaswamy Aiyer. The Indian Constitutional Problems.
Muddiman Committee's Report.
Keith. Sovereignty of the British Dominions.
Montagu-Chelmsford Report, Simon Commission Report, Nehru Report.

Paper IV.

Public Finance, including Indian Finance.

Lutz. Public Finance.
Stamp. Fundamental Principles of Taxation.
Hilton-Young. The System of National Finance.
Banerjea, P. N. Provincial Finance.
Banerjea, P. N History of Indian Taxation.
Niyogi, J. P. Evolution of the Indian Income Tax.
Wattal. Financial Administration in British India.
Report of the Taxation Enquiry Committee.

For reference:

Colwyn Committee's Report on National Debt and Taxation.
Banerjea, P. N.—Indian Finance in the Days of the Company.
Pigou. Study in Public Finance.

Paper V.

Indian Economics with a special study of the following problems.

(I) *Land Tenures.*

Ascoli. Early Revenue History of Bengal.
Field. Introduction to Bengal Regulations.
Ramsbotham. Studies in the Land Revenue System of Bengal.
Hastings' Minutes.
Sir Philip Francis' Minutes.
Sir John Shore's Minutes.
Cornwallis' Minutes.
Permanent Settlement Regulation of 1793.
Dutt, R. C. Open Letters to Lord Curzon.
Government of India Resolution of 1902.
Bengal Tenancy Act of 1928.

For reference:

Firminger. Fifth Report of the Select Committee of the House of Commons, 1812.

(2) Industrial Development.

Pillai. Economic Conditions in India.
Vera Anstey. Economic Development of India.
Report of the Indian Industrial Commission.
Clow. State and Industry.
Broughton. Labour in Indian Industries.
Clow. Factory Legislation in India.

Bulletins of the Department of Industries:—

No. 23. Conciliation and Arbitration—R. N. Gilchrist.
No. 24. Paper and Paper Pulp Production in the Madras Presidency—F. Marsden.
No. 29. Notes on Glass Manufacture—C. S. Fox.
No. 30. The Possibility of Manufacturing Portland Cement in the United Provinces—E. R. Watson.
No. 31. Women's Labour in Bengal Industries—D. F. Curjel.

Tariff Board Report on Steel and Cotton Textile and Sugar Industries.
Hardy. Report on Cotton Piece Goods Trade.

For reference:

Burnett Hurst. Labour and Housing in Bombay.

GROUP A.

Paper VI.

History of Economic Thought with an Outline of Economic History since the Industrial Revolution.

Haney. History of Economic Thought.
Gide and Rist. A History of Economic Doctrines.
Adam Smith. Select Chapters from the Wealth of Nations (Economic Classics Series).
Fay. Great Britain from Adam Smith to To-day.
Cunningham. Growth of English Industry and Commerce. Modern Times, Part II (Laissez Faire).

For reference:

List. National System of Political Economy.
Ricardo. Political Economy (Selections, Economics Classics Series).
Cannan. Review of Economic Theory.

Papers VII and VIII.

(i) The History, Theory and Present system of Banking and Currency.

Conant. Principles of Money and Banking.
Dunbar. History and Theory of Banking.
Hawtrey. Theory and Practice of the Gold Standard.
Rau. Present Day Banking in India.
Kisch and Elkin. Central Bank.
Reports of the Royal Commission on Indian Currency.
Coyajee. Indian Monetary System.

For reference:

Fisher. Purchasing Power of Money.
Keynes. Tract on Monetary Reform.
Keynes. Treatise on Money, Vols. I and II.
Sinha. Early European Banking in India.
Indian Paper Currency Act.
Report of the Controller of Currency (latest issue).
Burgess. Reserve Banks and the Money Market.
Willis and Peckhart. Foreign Banking Systems.

(ii) History, Theory and Present Organisation of International Trade.

Chapters bearing on the subject in Ricardo, Mill and Cairnes.
List. National System of Political Economy.
Pigou. Protective and Preferential Import Duties.

Viner. Dumping: Problem in International Trade.
P. Ashley. Modern Tariff History.
Brown. International Trade and Exchange.
Taussig. Some Aspects of the Tariff Question.
Taussig. International Trade.
Clare and Crump. A.B.C. of Foreign Exchange.
Banerjea, P. N. Fiscal Policy in India.
Coyajee. Indian Fiscal Problem.
Review of the Trade of India (latest issue).
Report of the Indian Fiscal Commission.

For reference:

Survey of Overseas Markets.
Ainscough. Report on British Indian Trade (latest issue).

(iii) *The Theory and Practice of Statistics including Demography.*

A. L. Bowley. Elements of Statistics (New edition).
Jones. First Course in Statistics.
Bowley. Measurement of Social Phenomena.
Yule. Introduction to Statistics.
Newsholme. Vital Statistics.
Mills. Statistical Method applied to Economics and Business.
Census Report, 1921 (India and Bengal).
The Jubilee Volume of the Journal of the Royal Statistical Society.
British and Foreign Trade and Industries, being Memoranda, etc., prepared by the Board of Trade (commonly called the Fiscal Blue Book).
Imperial Gazetteer, Vol. I, Chapters IX and X.

For reference:

Mayo Smith. Statistics and Economics.
Stamp. British Incomes and Property.

(iv) *Analytical and Mathematical Economics.*

Connynghame. Geometrical Political Economy.
Cournot. Mathematical Principles of the Theory of Wealth (Economic Classics Series).
Jevons. Theory of Political Economy.
Marshall. Principles of Economics (Mathematical Appendices).
Pigou. Economics of Welfare (Mathematical Appendices).
Edgeworth. Papers relating to Political Economy, Sections I, IV and VI.
Wicksteed. Alphabet of Economic Science.
Wicksteed. Common Sense of Political Economy.
Articles by Flux, Pigou and Edgeworth in the "Economic Journal" bearing on Mathematical Economics.

For reference:

Bowley. Mathematical Groundwork of Economics.

(v) *Modern Economic Development.*

Ogg and Sharp. Economic Development of Modern Europe.
Dawson. Evolution of Modern Germany.
Maurice Daub. Russian Economic Development since the Revolution.
I. J. Bryan. Japan from Within.
Dutt, R. C. India under Early British Rule.
Dutt, R. C. India in Victorian Age.
Knowles. Industrial and Commercial Revolutions of Great Britain in the 19th Century.
Knowles. Economic Development of the British Overseas Empire.

For reference:

Clark. History of the manufactures of the United States, 1860-1914.
H. Levy. Monopolies, Cartels and Trusts in British Industry.
Lietman. International Cartels and Trusts.

GROUP B.

Paper VI.

History of Political Thought.

Plato. Republic.
Aristotle. Politics.
Rousseau. Social Contract.
Dunning. History of Political Theories, Three Vols.
Willoughby. Political Theories of the Ancient World.
Barker. English Political Thought (from Spencer to the present day).
Merriam, Barnes and others. A History of Political Theories: Recent Times.

For reference:

Green. Lectures on the Principles of Political Obligation.
Machiavelli. The Prince.
Hobbes. Leviathan.
Locke. Second Treatise on Government.
Watson. The State in War and Peace.

Papers VII and VIII.

(*i*) *Comparative Study of Political Institutions.*

Greenidge. Greek Constitution.
Greenidge. Roman Public Life.
Maine. Ancient Law. (Selected Chapters.)
Kautilya. Arthasastra. (Selected portions.)
Banerjea, P. N. Public Administration in Ancient India.
Ghoshal. Hindu Political Theories.
Sarkar, B. K. Political Institutions and Theories of the Hindus.
Woodrow Wilson. Congressional Government.
Sidgwick. Development of European Polity.
Munro. Governments of Europe.

For reference:

Kautilya. Arthasastra.
Glotz. Greek Cities.
Homo. Roman Political Institutions.
Marriott. The Mechanism of the Modern State.
Select Constitutions of the World (Dail Eireann Publication).
Coulanges. Ancient City (Tr. Small).
Headlan Morley. The New Democratic Constitutions of Europe.
Bryce. Modern Democracies.

(*ii*) *Sociology Theoretical and Applied.*

Lichtenberger. Development of Social Theory, 1924.
Giddings. Principles of Sociology.
Fairchild. Applied Sociology.
Risley. Peoples of India.
Mookerjee, Bhudev. Samajik Prabandha.
Lowie. Primitive Society.
Bernard. Instinct, a Study of Social Psychology.
Census Reports for India, 1911 and 1921.
Moris Ginsberg. The Psychology of Society.

For reference:

Hobhouse. Development and Purpose.
Frazer. Golden Bough (Abridged Edition).
Graham Wallas. Our Social Heritage.
William McDougall. Introduction to Social Psychology, 6th edition, 1921.
Gustave le Bon. The Psychology of Revolution.
Graham Wallas. Human Nature in Politics, 3rd edition, 1920.
J. B. Bury. History of the Freedom of Thought, 2nd impression, 1920.
Parmelee. Criminology.
Dewey. Human Nature and Conduct.
Wundt. Folk Psychology.
Brij Narain. Population in India.
Popenoe and Johnson. Applied Eugenics.

(iii) Public International Law.

Oppenheim. International Law.
Hall. International Law.
Higgins. The Hague Peace Conference.
Pitt Cobbet. Cases on International Law, Two Vols. (New edition).
Pollock. League of Nations.
Garner. Recent Developments in International Law.

For reference:

Year Book of the League of Nations.
J. J. Hall. Law of Naval Warfare.
Phillimore. Three Centuries of Treaties of Peace.
The British Year Book of International Law.
Transactions of the Grotius Society (Problems of Peace and War). First published in 1915.
The American Journal of International Law.
Treaty Series—H. M. Stationery Offices:—

No. 4 (1914) Treaty of Versailles.
No. 11 (1919) Treaty of St. Germain-in-Laye.
No. 5 (1924) Treaty of Neuilly Sur Seins.
No. 10 (1924) Treaty of Trianon.
No. 11 (1920) Treaty of Sevres.

Treaty of Lausanne.
History of the Peace Conference at Paris edited by A. W. V. Temperly, 5 Vols., 1920-21.
Garner. International Law and the World War. Two Vols., 1921.
Labour's Magna Charta, a study of the Labour clause of the Peace Treaty and recommendations of the Washington International Labour Conference by Nicholas Chisholm, 2nd edition, 1921.
Spaight. Air Power and War Rights.
Hudson. Current International Co-operation.
Ten years of world Co-operation (League of Nations).

(iv) Constitutional and Administrative Law.

Port. Administrative Law.
Goodnow. Comparative Administrative Law.
Keith. Constitution, Administration and Laws of the British Empire.
Willoughby. Fundamental Concepts of Public Law.
Asquith and Chalmers. Constitutional Law of England.

For reference:

Thomas. Leading Cases in Constitutional Law. (New Edition.)
Ghosh, N. N. Comparative Administrative Law. (Tagore Law Lectures, 1918.)

Commerce.

Compulsory Papers.

Paper I—Realistic Economics.

Marshall—Industry and Trade.
Haney—Business Organisation.
Taussig—International Trade.
Stephenson—Principles of Business Economics.

Paper II—Accounting.

Spicer and Peglar—Book-keeping and Accounts
Batliboi, J. R.—Advanced Accounts.
Carter—Advanced Accounts.
Hawkins—Cost Accounts.

Paper III—Commercial Law.

Smith—Mercantile Law.
Stevens—Mercantile Law.
Schaub and Issacs—Law in Business Problems (Macmillan).
Davar—Indian Mercantile Law.
Sengupta, Dr. Nareschandra—Company Law.

Paper IV—Banking.

Agger—Organised Banking.
Polly and Gould—Stock Exchange.
Rau—Present-day Banking.
Sheldon—Practice of Law of Banking.
Spalding—Foreign Exchange and Foreign Bills in Theory and Practice.
Thomas—Arithmetic of Foreign Exchange.

For reference—

Kisch Central Banks.
Burgess—Reserve Banks and the Money Market.
Willis and Bekhart—Foreign Banking System.

Optional Papers.

Papers V to VIII.

Any four of the following:—

(i) Industrial Structure and Development.

Marshall—Industry and Trade.
Liefmann—International Cartels and Trusts.
Clapham—Economic Development of France and Germany, 1815-1915.
Report of the Industrial Commission (1916-18).
Broughton (Chatterjee, Lady)—Labour in Indian Industries.
Special Study of Cotton, Jute, Iron, Coal and Tea Industries in India.

For reference—

Reports of the Tariff Board on Steel and Cotton Textile Industry.

(ii) Statistics.

Riegel—Business Statistics.
Secrist Readings and Problems in Statistical Method.
Bowley—Elements of Statistics, Part I.
Mills Statistical Methods applied to Economics and Business.

(iii) Economic Geography.

Quinquennial Review of the Mineral Production in India.
Howard—Crop Production in India.
Chisholm—Handbook of Commercial Geography.
Chambers of Commerce Atlas.
Bartholomew—Commercial Atlas.
Russell Smith—Industrial and Commercial Geography.
Rodwell Jones—Economic Geography.

(iv) Tariffs.

Bastable and Gregory—Commerce of Nations.
Coyajee—Indian Fiscal Policy.
Banerjea, P. N.—Indian Fiscal Problem.
Gregory—Tariffs: A Study in Method.
Report of the Indian Fiscal Commission, 1922.
The Indian Tariff Act—The Indian Sea Customs Act.
Report of the Indian Tariff Board regarding the grant of Protection to the Steel, Cotton, Paper and Sugar industries.
Ashley—Modern Tariff History.

(v) Agricultural Economics.

Leake—The Bases of Agricultural Practice and Economics in the United Provinces of India.
Ray—Agricultural Indebtedness.
Study of Indian Villages by Mann, Keatinge, Jack, etc.
Nourse—Agricultural Economics.
Taylor—Agricultural Economics (Ed. 1920)
Carver—Principles of Agricultural Economics.
Boyle—Agricultural Economics.
Wolf—Rural Reconstruction.
Mukherjee, P.—Co-operative Movement in India
Report of the Agricultural Commission, 1928—(Abridged).

(vi) Currency.

Conant—The Principles of Money and Banking (Vol. I only).
Easton—Exchange, Currency and Finance.
Shirras—Indian Finance and Banking (Chapters on Currency).
Report on the Operations of the Currency Department of the Government of India (latest issue).
Report of the Hilton Young Commission.
Coyajee—Indian Monetary System.
Hawtrey—Theory and Practice of the Gold standard.

(vii) Public Finance.

Gyan Chand—Financial System in India.
Plehn—Public Finance (Ed. 1920).
Dalton—Public Finance.
P. N. Banerjea—History of the Indian Taxation.
J. P. Niyogi—Evolution of the Indian Income-Tax.

For reference—

Shirras—Science of Public Finance.
P. N. Banerjea—Provincial Finance in India.

(viii) Auditing.

Spicer and Peglar—Practical Auditing.
Pixley—Duties of Auditors.
Dicksee—Practical Auditing.

(ix) Business Organisation.

Chartered Institute of Secretaries—Secretarial Practice.
Bloomfield—Business Organisation.
Sparling—Introduction to Business Organisation.
Haney—Business Organisation and Combination.
Stephenson—Principles and Practice of Commerce.

(x) Transport.

*Stephenson—Communications.
*Hadley, A.T.—Railroad Transportation.
Ripley, W. Z.—Railroads, rates, regulations.
Philip Burtt—Passenger Train Operation.
*C. P. Mossop—Railway Operating Statistics.
*Srinivasan, K. C.—Law & Theory of Railway Rates.
S. C. Ghosh—Lectures, Parts I-III.
*Sanyal, N.—Development of Indian Railways.
Major Buddon—Operating Statistics and the Divisional Officer.

(xi) Economic History.

F. A. Ogg—Development of Modern Europe,
Knowles—Economic Development of the Overseas Empire—1763-1914.
Cambridge Modern History, Vol. VIII, Ch. XXII.
I. J. Bryan—Japan from Within.
Report of the Indian Industrial Commission.
Birnie—Economic History of Europe.

For reference—

R. C. Dutt—India under Early British Rule.
R. C. Dutt—India in the Victorian Age.
Imperial Gazetteer, Vol. III.

Pure Mathematics.

In the syllabus for the theory of Numbers, the three heads above the last Head in Paper I have been transferred to Paper II.

[*N. B.*—No text-book is prescribed. The books recommended are to be studied in the light of the Syllabuses prescribed.]

Compulsory Papers.

Paper I.

G. Chrystal. Algebra, Part II.
E. W. Hobson. Plane Trigonometry.
Todhunter and Leathem. Spherical Trigonometry.
Burnside and Panton. Theory of Equations, Vols. I and II.

Paper II.

Minchin. Statics, Vols. I and II.
Routh. Statics, Vols. I and II.
Routh. Dynamics of a Particle.

Paper III.

Sommerville. Analytical Conics.
Ganguly. Theory of Plane Curves, Vols. 1 and 2.

For reference—

Salmon. Conic Sections.
Salmon. Higher Plane Curves.
Hilton. Plane Algebraic Curves.

Paper IV.

Salmon. Geometry of Three Dimensions, 5th Ed., Vol. I.
Forsyth. Differential Geometry.

Paper V.

Goursat. Mathematical Analysis, Vol. I (translated by Hedrick).
Edwards. Differential Calculus.
Williamson. Differential Calculus.
Todhunter. Integral Calculus.
Williamson. Integral Calculus.
Phillip. Course of Analysis (Cambridge University Press).

Paper VI.

Forsyth. Differential Equations.
MacRobert. Spherical Harmonics.
G. Prasad. Treatise on Spherical Harmonics (Part I).

Special Papers.

Theory of Functions of a Real Variable.

Townsend. Theory of Functions of a Real Variable
Hobson. Theory of Functions of a Real Variable
G. Prasad. Recent researches in the theory of Fourier Series.

Theory of Function of a Complex Variable.

Goursat. Mathematical Analysis, Vol. 2, Part I (translated by Hedrick).
MacRobert. Functions of a Complex Variable (Macmillan & Co.).

For reference—

Whittaker and Watson. Modern Analysis, 4th Edition.
Forsyth. Theory of Functions of a Complex Variable, 3rd Edition.

Theory of Groups.

Miller, Blichfeldt and Dickson. Finite Groups. (John Wiley and Sons).
Hilton. Finite Groups.
Dickson. Algebraic Equations.

Theory of Numbers.

Reid. Theory of Algebraic Numbers.
Mathews. Theory of Numbers, Part I.

For reference—

Smith. Reports on the Theory of Numbers. (Collected Papers, Vol. I, pp. 38-364).

Vector Analysis and Quaternions.

Joly. Manual of Quaternion.
Hamilton. Elements of Quaternions, (Ed. Joly), Vol. I.

Calculus of Variations.

Byerley. Introduction to Calculus of Variations (Harvard University Press).
Todhunter Integral Calculus.
E. B. Wilson. Advanced Calculus.
Bolza. Calculus of Variations.
Hancock. Lectures on Calculus of Variations.

Finite Differences and Statistics.

Boole. Finite Differences.
De Morgan. Calculus of Functions.
D. C. Jones. Statistics.
Forsyth. Statistics.
Whittaker George and Robinson. A Short Course on Interpolation
Batcheldier. Introduction to Difference Equations.

For reference—

Herschel. Examples of Calculus of Finite Differences.
Babbage. Examples of Functional Equations.

Projective Geometry.

Mathews. Projective Geometry.
Cremona. Projective Geometry.
Hilbert. Foundations of Geometry (Trans. by Townsend Open Court Publishing Company).

For reference—

Durell. Plane Geometry for Advanced Students, Vol. 2.
Veblen and Young. Projective Geometry, Vol. I.
Sommerville. The Elements of Non-Euclidean Geometry.

Non-Euclidean Geometry.

Carslaw. Non-Euclidean Geometry and Trigonometry.
Bonola. Non-Euclidean Geometry (Trans. Carslaw, Open Court Publishing Company).
Hilbert. Foundations of Geometry. (Trans. Townsend, Open Court Publishing Company).
Sommervile. Non-Euclidean Geometry.

For reference—

H. P. Manning. Geometry of Four Dimensions.
Ganguli. Analytical Geometry of Four Dimensions.
Engel u. Stackel. Theories der Parallel Linien.
S. Mukhopadhyay. Papers on Non-Euclidean Geometry (Bulletin, Calcutta Mathematical Society).

Integral Equations.

Lovitt. Linear Integral Equations (New York, 1924).
Goursat. Cours D' Analyse Mathematique, Vol. 3, Chapters 30, 31, 32, 33.
Volterra. Lecons sur les equations integra les et les equations intigro-differentiales, Paris (1913).
Whittaker and Watson. Modern Analysis (4th Edition).

For reference—

Webber. Partielle Differential gleichungen der Mathematischen Physik (Vieweg, Brunswick).

Elliptic Functions.

G. Prasad. Introduction to the theory of elliptic Functions (Calcutta, 1928).

For reference—

Abel. Ouvres, Vols. I and II.

Algebra of Quantics.

Elliot, E. B. Algebra of Quantics.
Grace and Young. Algebra of Invariants.

S. C. GHOSH, *Secretary (offg.).*

The Calcutta Gazette

THURSDAY, SEPTEMBER 24, 1931.

Part II

Advertisements.

Notices.

Advertisements, Notices, etc., intended for insertion in this Part of the Gazette cannot be received after noon of Saturday.

IMPERIAL BANK OF INDIA.

Statement of the affairs of the Imperial Bank of India on the 11th September 1931.

LIABILITIES.

	Rs.	A.	P.
Subscribed Capital ..	11,25,00,000	0	0
Capital paid up ..	5,62,50,000	0	0
Reserve ..	5,42,50,000	0	0
Public Deposits ..	14,06,40,000	0	0
Other Deposits ..	64,45,12,000	0	0
Loans against securities per contra ..	....		
Loans from the Government of India under section 20 of the Paper Currency Act, against Inland bills discounted and purchased per contra ..	....		
Contingent liabilities ..	....		
Sundries ..	1,26,55,000	0	0
	91,73,07,000	0	0

ASSETS.

	Rs.	A.	P.
Government Securities ..	29,74,66,000	0	0
Other authorized securities under the Act ..	2,76,77,000	0	0
Ways and Means Advances to the Government of India ..	....		
Loans ..	10,55,80,000	0	0
Cash Credits ..	26,73,18,000	0	0
Inland bills discounted and purchased ..	2,82,69,000	0	0
Foreign bills discounted and purchased ..	38,07,000	0	0
Bullion ..	....		
Dead stock ..	2,73,11,000	0	0
Liability of constituents for contingent liabilities per contra ..	....		
Sundries ..	46,46,000	0	0
Balances with other Banks ..	6,54,000	0	0
	76,27,22,000	0	0
Cash ..	15,45,85,000	0	0
	91,73,07,000	0	0

The above balance sheet includes :—

	£
Deposits in London ..	860,200
Advances and Investments in London ..	868,700
Cash and balances at other Banks in London ..	51,500

Percentage 19·16.

Bank rate 7 per cent.

OSBORNE A. SMITH,
Managing Governor.

(1949—1)

Sale notice of 1931-32.

The trees as per this list will be sold in public auction by the Divisional Forest Officer, Chittagong Division, at the Divisional Forest Office on the 31st October 1931, at 10-30 a.m., subject to the conditions laid down at the end.

Intending purchasers are invited to inspect the trees before the date of sale.

Puicheri Clear Felling Coupe of 1931-32, Jaldi Range.

Lot No.	Serial No. of trees.	Species.	B. H. girth classes.										Total.
			Poles under 2'.	Poles under 3'.	3' to 3' 11".	4' to 4' 11".	5' to 5' 11".	6' to 6' 11".	7' to 7' 11".	8' to 8' 11".	9' to 9' 11".	10' and over.	
1	1 63	Hargaja ..	..	..	..	..	..	..	..	..	1	..	1
		Jam ..	..	..	8	6	2	1	1	..	..	..	18
		Chuchiam ..	..	..	..	1	..	..	..	..	..	..	1
		Chapalish ..	..	..	..	..	..	..	1	1	..	..	2
		Garjan ..	..	..	1	2	2	..	..	..	1	..	6
		Kesun ..	..	..	1	..	..	..	..	..	..	..	1
		Atali ..	..	..	1	..	..	..	..	..	..	..	1
		Batana ..	..	..	..	..	1	..	..	..	..	..	1
		"B" class poles	3	3	..	..	..	..	..	..	..	..	6
		C & D class poles.	127	47	..	..	..	..	..	..	..	..	174
		Total ..	130	50	11	9	5	1	2	1	2	..	211
2	64 137	Jam ..	..	..	17	17	4	1	..	..	..	..	39
		Bahera ..	..	..	1	1	1	..	..	..	..	..	3
		Batana ..	..	..	3	2	1	1	..	..	1	..	8
		Suri ..	..	..	1	..	..	..	..	..	..	..	1
		Atali ..	..	..	4	1	..	1	..	..	..	..	6
		Garjan ..	..	..	2	2	3	..	..	..	..	..	7
		Kawgola ..	..	..	..	1	..	..	..	..	..	..	1
		Chuchiam ..	..	..	..	1	1	1	..	..	..	..	3
		Jalpai ..	..	..	..	..	..	..	1	..	..	..	1
		Kebong ..	..	..	2	..	..	..	..	..	..	..	2
		Kharjam ..	..	..	..	1	..	..	..	..	..	..	1
		Painatora ..	..	..	1	..	..	..	..	..	..	..	1
		Rohma ..	..	..	1	..	..	..	..	..	..	..	1
		"B" class poles.	2	3	..	..	..	..	..	..	..	..	5
		C-D class poles	342	93	..	..	..	..	..	..	..	..	435
		Total ..	344	96	32	26	10	4	1	..	1	..	514

Dhobachery Clear Felling Coupe of 1931-32, Patiya Range.

3	1 14	Gamar ..	..	..	2	1	1	..	..	..	..	..	4
		Chapalish ..	..	..	1	..	..	2	..	..	..	..	3
		Garjan ..	..	..	..	..	2	..	..	..	..	..	2
		Jarul ..	..	..	..	1	..	..	..	..	..	..	1
		Pitraj ..	..	..	..	1	..	..	..	..	..	..	1
		Champ ..	..	..	..	1	..	..	..	..	..	..	1
		Bandarhola ..	..	..	..	..	..	..	..	..	..	1	1
		Gokuldhup ..	..	..	..	..	1	..	..	..	..	..	1
		Total ..	..	..	3	4	4	2	..	..	..	1	14

Hazarikhil Clear Felling Coupe of 1931-32, Ramgarh-Sitakund Range.

4	1 108	Bandarhola ..	..	..	..	2	3	2	..	..	..	..	7
		Tejbahal ..	..	..	..	..	1	..	..	..	..	..	1
		Jam ..	..	..	3	3	..	..	..	1	..	..	7
		Chapalish ..	..	..	1	3	1	..	2	..	..	..	7
		Garjan ..	..	..	3	3	..	3	4	3	1	1	18
		Telsur ..	..	..	..	..	..	..	1	..	..	..	1
		Pitraj ..	..	..	..	1	..	..	..	..	..	..	1
		Karai ..	..	..	..	1	..	..	..	..	..	..	1
		"D" class ..	..	..	29	27	2	2	4	1	..	..	65
		Total ..	..	..	36	40	7	7	11	5	1	1	108

Lot No.	Serial No. of trees.	Species.	B. H. girth classes.									Total.
			Poles under 2'.	Poles under 3'.	3' to 3' 11".	4' to 4' 11".	5' to 5' 11".	6' to 6' 11".	7' to 7' 11".	8' to 8' 11".	9' to 9' 11".	10' and over.	
5	109—368	Garjan ..	..	..	5	7	3	7	10	8	2	4	46
		Tali ..	..	..	5	13	4	5	1	..	..	..	28
		Arjan ..	..	..	1	.	..	..	..	1	1	..	3
		Kanjal ..	..	..	1	1	..	..	..	.	..	..	2
		Chapalish ..	..	.	7	7	2	..	2	..	2	..	20
		Pitraj .	..		2	2	1	1	1	..	..	..	7
		Jam ..	.	..	..	4	3	4	..	1	..	..	12
		Bailam ..	..	..	2	2	1	..	..	..	..	..	5
		Bandarhola .	.	..		4	1	3	1	1	..	1	11
		Narikel ..	..	..	..	2	1	..	..	2	..	..	5
		Karai .	.	..	2	..	1	..	..	..	..	..	3
		Tezbahal ..	..	..	1	3	..	.	..	..	..	..	4
		Telsur ..	..	..	1	1	.	1	..	..	..	..	3
		"D" class ..	..	..	21	47	19	7	6	2	2	5	109
		Total ..	..	..	48	93	36	28	21	15	7	10	258
6	367—391	Chapalish ..	..	..	1	..	..	1	..	..	..	..	2
		Bandarhola .	..	..	..	4	1	..	..	..	..	..	5
		Pitraj ..	..	..	..	1	..		.	..	..	.	1
		"D" class ..	..	..	9	6	1	..	..	..	..	1	17
		Total ..	..	..	10	11	2	1	..	..	..	1	25

Baramasia Selection Felling Coupe, South Sitakund Range, 1930-31.

Lot No.	Serial No of trees	Species.	B. H girth classes.							Total.
			4' to 4' 11"	5' to 5' 11"	6' to 6' 11"	7' to 7' 11".	8' to 8' 11"	9' to 9' 11"	10' and over	
7	1—14	Bandorhola ..	.	1	1	2	1	1	..	6
		Dhadi		4	..	..	..	..	..	4
		Jam	.	1	..	..	..	..	..	1
		Bahera	..	.	..	..	1	..	..	1
		Chikrashi .	..	..	1	1	..	..	..	2
		Chandul	..	.	..	..	..	..	1	1
		Kanjal	.	..	1	..	..	..	..	1
		Total ..	.	6	3	3	2	1	1	16
8	15—35	Malagiri	..	1	..	.	..	..	..	1
		Garjan	..	1	1	8	.	2	..	12
		Akhataru	..	.	1	.	.	..	..	1
		Pitraj	.		1	.	.	..	..	1
		Sursh	..	.	1	.	..	..	..	1
		Jam	.	.	1	1	.	..	..	2
		Tali	.	..	1	.	.		..	1
		Harteki	..	..	1	..	..	..	..	1
		Uriam	.	1	.	..	..	..	..	1
		Total ..	..	3	7	9	..	2	..	21
9	1—20	Garjan		..	..	1	2	..	3	6
		Jam		1	.	1	1	1	.	4
		Kanak	..	..	1	1	1	..	..	3
		Bandorhola .. .	..	..	1	..	..	.		1
		Pitraj	..	..	1	..	..	..		1
		Uriam	..	..	1	..	..	..	1	2
		Chikrashi	..	..	..	1	..	..	.	1
		Chandul	..	.	..	..	..	..	1	1
		Kolabulo	.	..	..	..	1	..		1
		Total ..	..	1	4	4	5	1	5	20
10	21—35	Garjan	..	..	.	1	1	..	2	4
		Jam	..	..	1	..	.	1	..	2
		Bandorhola	..	..	2	.	.	..	1	3
		Chapalish	..	..	..	..	..	..	1	1
		Kolabulo	.		..	1	1	..	..	2
		Chandul	..	..	..	.	..	..	2	2
		Kanak	..		..	..	..	..	1	1
		Total ..	..	..	3	2	2	1	7	15

Lot No.	Serial No. of trees.	Species.	B. H. girth classes.							Total.
			4′ to 4′ 11″.	5′ to 5′ 11″.	6′ to 6′ 11″.	7′ to 7′ 11″.	8′ to 8′ 11″.	9′ to 9′ 11″.	10′ and over.	
11	36—59	Garjan	..	..	..	..	3	3	6	12
		Kanak	..	..	2	1	..	..	..	3
		Jam	..	..	2	1	..	..	..	3
		Khairjam	..	..	..	..	1	..	..	1
		Chapalish	..	..	..	1	..	..	1	2
		Kolabila	..	..	..	..	1	..	..	1
		Uriam	..	..	..	..	1	1	..	2
		Total ..	..	..	4	3	6	4	7	24
12	60—75	Chapalish	..	..	..	..	..	1	1	2
		Garjan	..	..	1	2	3	2	1	9
		Bandorhola	..	..	..	..	..	..	1	1
		Velua	..	..	1	..	..	..	..	1
		"D" class	..	..	..	1	..	..	..	1
		Bhadi	..	..	1	..	..	..	..	1
		Jam	..	..	..	..	1	..	..	1
		Total ..	..	..	3	3	4	3	3	16
13	76—90	Chapalish	..	..	..	1	..	..	..	1
		Garjan	..	..	..	1	3	..	2	6
		Jam	..	..	1	2	..	..	1	4
		Kanak	..	..	..	..	..	1	..	1
		Silbhadi	..	..	..	1	..	..	..	1
		Jhumka Bhadi	..	..	1	..	..	..	..	1
		Kolabila	..	..	..	1	..	..	..	1
		Total ..	..	..	2	6	3	1	3	15

Khas Forest Selection Felling Coupe, Ramgarh-Sitakund Range, 1930-31.

North Baramasia Khas Forest.

14	1—13	Garjan	..	2	6	1	..	3	..	12
		Chapalish	..	..	..	..	..	..	1	1
15	14—25	Garjan	1	3	2	3	1	..	..	10
		Jam	..	1	..	..	..	..	..	1
		Uriam	..	..	..	..	..	1	..	1
16	26—37	Garjan	..	2	5	2	1	..	..	10
		Jam	1	..	..	..	..	..	..	1
		Khairjam	..	..	..	..	1	..	..	1
17	38—49	Garjan	1	3	4	1	..	1	1	11
		Kanak	..	1	..	..	..	..	..	1
18	50—61	Garjan	5	5	1	1	..	..	..	12

Sreemai Selection Felling Coupe, Patiya Range, 1930-31.

19	1—23	Garjan	..	..	..	3	2	3	7	15
		Bandorhola	..	..	..	..	..	1	1	2
		Champ	..	..	..	..	..	1	3	4
		Bhadi	..	..	..	..	1	..	..	1
		Chapalish	..	..	..	..	..	..	1	1
		Total ..	..	..	..	3	3	5	12	23
20	24—40	Garjan	..	..	..	..	..	..	11	11
		Chapalish	..	..	..	..	2	..	2	4
		Boilsur	..	..	..	..	1	..	..	1
		Bhadi	..	..	1	..	..	..	..	1
		Total ..	..	..	1	..	3	..	13	17

Lot No.	Serial No. of trees.	Species.	B. H. girth classes.						Total.
			4' to 4' 11".	5' to 5' 11".	6' to 6' 11".	7' to 7' 11".	8' to 8' 11".	9' to 9' 11".	10' and over.	
21	41—55	Garjan	..	..	..	..	..	1	6	7
		Chapalish	..	..	..	1	..	1	1	3
		Boilsur	..	..	..	..	..	1	1	2
		Champ	..	..	..	..	1	..	..	1
		Sheori	..	..	1	..	..	..	..	1
		Jam	..	..	..	..	1	..	..	1
		Total ..	..	..	1	1	2	3	8	15
22	56—70	Garjan	..	..	..	..	1	3	6	10
		Champ	..	..	..	1	..	..	1	2
		Boilsur	..	..	..	..	..	..	1	1
		Bhadi	..	..	..	..	1	..	..	1
		Jam	..	..	..	..	1	..	..	1
		Total ..	..	..	..	1	3	3	8	15

Chiringhata Selection Felling Copse, Patiya Range, 1930-31.

23	13—24	Garjan	..	..	1	4	..	1	6	12
24	25—40	Garjan	..	..	..	4	2	4	5	15
		Champ	..	..	..	..	..	..	1	1
		Total ..	..	..	..	4	2	4	6	16
25	41—62	Garjan	..	..	1	6	4	3	3	17
		Boilam	..	..	..	..	..	..	1	
		Jam	..	..	..	..	..	..	1	1
		Bandorhola	..	..	..	..	..	..	1	1
		Chapalish	..	..	..	..	1	..	..	1
		Sheori	..	..	..	..	..	..	1	1
		Total ..	..	..	1	6	5	3	7	22
26	63—80	Garjan	..	..	..	7	6	..	2	15
		Jam	..	..	..	1	..	..	1	2
		Chapalish	..	..	..	1	..	..	..	1
		Total ..	..	..	..	9	6	..	3	18

Jaldi Selection Felling Coupe, Jaldi Range, 1930-31.

27	1—24	Bandorhola	..	..	..	..	3	1	2	6
		Bhadi	..	2	1	..	1	1	..	5
		Dolkorai	..	..	2	2	2	1	..	7
		Dakrom	..	..	1	..	..	..	..	1
		Pitraj	..	..	..	1	..	..	..	1
		Garjan	..	..	..	..	..	..	1	1
		"D" class	..	..	1	1	..	..	..	2
		Kanjal	..	..	..	..	..	..	1	1
		Total ..	..	2	5	4	6	3	1	21
28	25—51	Uriam	..	..	..	..	..	1	1	2
		Garjan	..	..	3	1	2	1	2	9
		Jam	..	..	1	..	..	..	..	1
		Bandorhola	..	..	..	1	1	..	..	2
		Bahora	..	..	..	1	..	..	..	1
		Bhadi	..	..	2	..	1	..	..	3
		Dolkarai	..	..	..	2	..	1	1	4
		Chikrashi	..	..	..	1	..	..	..	1
		Katakorai	..	..	..	1	..	..	..	1
		Totoya	..	..	..	..	..	1	..	1
		Jarul	1	..	..	..	..	..	..	1
		Sheori	..	..	1	..	..	..	..	1
		Total ..	1	..	7	7	4	4	4	27

Khas Forest Selection Felling Coupe, Jaldi Range, 1930-31.

Lot No.	Serial No. of trees.	Species.	B. H. girth classes.							Total.
			4′ to 4′ 11″.	5′ to 5′ 11″.	6′ to 6′ 11″.	7′ to 7′ 11″.	8′ to 8′ 11″.	9′ to 9′ 11″.	10′ and over.	
Hurbong K. F.										
29										
30	16—30	Garjan	5	3	6	1	..	..	..	15
31	31—51	Garjan	6	11	1	1	1	..	..	20
		Jam	..	..	..	1	..	..	..	1
32	52—73	Garjan	12	5	5	..	..	..	..	22
33	74—88	Garjan	6	6	1	..	..	..	..	13
		Chapalish	..	..	1	..	..	..	..	1
		Telsur	1	..	..	..	..	..	..	1
34	89—103	Garjan	5	6	2	..	..	..	..	15
		Total ..	35	33	16	3	1	..	..	88

Conditions of sale.

1. The Divisional Forest Officer is not bound to accept the highest or any offer for any lot. The sale of any lot, the value of which exceeds Rs. 2,000 only, shall not be complete until confirmed by the Conservator of Forests, Bengal.

2. Successful bidders shall immediately deposit as earnest money one-tenth of the total bid in currency notes, which will be returned if the sale is not confirmed and will be retained as security deposit if the sale is confirmed.

3. Purchasers will be required to sign agreements in printed forms for outright sales. Copy of this form may be seen at the Divisional Forest Office, Chittagong, and at the Range Offices.

4. The following are among the conditions of the agreements for all lots of the sale :—

(1) Felling and extraction to be completed by the 31st May 1932 for the selection felling coupes and 29th February 1932 for the clear felling coupes.

(2) The purchase money to be paid in 3 equal instalments as follows :—

1st instalment—15th December 1931.

2nd instalment—1st February 1932.

3rd instalment—1st March 1932.

N. B.—Clear felling coupes will be paid for in two instalments on the 1st December 1931 and 1st February 1932.

5. Failure to sign the agreement within one month of confirmation of sale will render the purchaser liable to forfeiture of his security deposit.

The lot or lots so affected shall be re-sold by public auction or otherwise as the Divisional Forest Officer may think fit, and the defaulting purchasers shall be liable to make good any shortage on such re-sale.

6. "D" class poles used for saw-benches will not be charged for unless removed. They must however be marked by a Forest Officer before felling, and if removed will be charged for at schedule rates.

T. M. COFFEY,

Chittagong, the 1st August 1931. Divisional Forest Officer, Chittagong Division.

LAND SALE NOTICE.

Notification A.

NOTICE is hereby given, under sections 6 and 13, Act XI of 1859, that the undermentioned estate and shares of estate in the district of Nadia will be put up for sale at the office of the Collector of that district on the 25th September 1931, at 12 noon, for arrears of revenue and other demands which by law are realizable as arrears of Land Revenue :—

Tauzi No.	Name of mahal and pargana.	Sadar jama of whole estate.	Whether the whole estate is to be sold.	If only a share is to be sold, specification of such share or shares.	Names of proprietors of property to be sold.	If only a share is to be sold, the sadar jama of such share.	If the whole estate is to be sold, the arrears due from it.	If only a share is to be sold, the arrears due from it.
1	2	3	4	5	6	7	8	9
		Rs. A. P.					Rs. A. P.	
491	Sadipur, pargana Rajpur.	18,263 14 0	Whole ..	....	Bhujendra Nath Biswas and others.	..	40 4 0	..

Krishnagar, the 2nd September 1931.

A. BANERJI, *for* Collector.

Notice.

PURSUANT to the orders of Government, dated the 20th June 1881, particulars of the undernoted articles, held by the Calcutta Port Commissioners as Receivers of Wrecks, each article being of value exceeding Rs. 100, are published for general information in accordance with the provisions of section 276 of Act XXI of 1923 :-

No. and date in Recovery Register.			Description of article.	Approximate value.	Where and when recovered.	Where lying.
				Rs. A.		
September 1931 ..	10th ..	5 P.	2½ tons patent anchor, 30 fms. of 2" S. L. chain.	1,115 12	On the 23rd August 1931 in mid-stream at Budge-Budge.	On the foreshore above Tuckta Ghat.

C. V. L. NORCOCK, Deputy Conservator.

Port Commissioners' Office, Calcutta, the 10th September 1931. (1934—3)

In the Court of the Sub-Judge, Dinajpur.

MONEY EXECUTION CASE No. 46 of 1931.

Krishna Nath Saha

versus

(1) Rajendra Nath Sannal, (2) Sarath Mangala Debi, (3) Pramath Nath Sannal, (4) Nirmal Chandra Sannal, (5) Jagadish Chandra Sannal, (6) Prodyat Kumar Sannal, (7) Bomkesh Sannal and (8) Mrinal Kanthi Sannal.

THE following immovable properties of the judgment-debtors will be sold at an auction sale at 1 p.m. on the 5th October 1931 by the Nazir of this Court in the above-mentioned execution case for realisation of the decretal amount, costs and interest amounting to Rs. 4,156-1-0 under money decree No. 232 of 1925 of this Court :—

Schedule of property.

(1) Judgment-debtors' zamindary situate in Dinajpur, Collectorate tauzi No. 581—1 in mauza Jibanpur, pargana Santosh, police-station Balurghat, annual revenue being Rs. 81-8-9.

(2) Judgment-debtors' zamindary situate in Dinajpur, Collectorate tauzi No. 581, residuary, mauza Jibanpur, Faridpur Chak, Lingoil, pargana Santosh, police-station Balurghat, annual revenue being Rs. 25-7-9.

(3) Judgment-debtors' zamindary situate in Dinajpur, Collectorate tauzi No. 76, residuary, mahal pargana Santosh Lal Lashkanpur, mauza Abhirampur Chak Ajodha, Ajodha, Aladi Chak Shibrambati, Alam Chak Alinagar, Alipur, Ananothapur, Angra Chak Arompur, Arjunpur, Arjun Krishnapur, Askoir Asora, Krisnabati, Atmaram Chak Totpara, Baidyanathpur, Bakhan Chak Modangunja *alias* Bakshabari *alias* Sanaton Chak Balarampur, Balindra, the judgment-debtors having 4 as. share in this zamindary, annual revenue being Rs. 26,164-15-1.

A. L. BANERJEA, Sub-Judge.

Dinajpur, the 5th September 1931. (1942 1)

Sale Notice.

THE following properties belonging to the estate of Srimati Ananga Mohini Ash Chaudhurani, resident of Mangalgunj, district Jessore, now under the management of the Court of Wards, Jessore, will be sold by the undersigned at a public auction at the Jessore Collectorate, at 1 p.m., on 12th October 1931.

The intending purchasers are requested to send in their offers in writing to the undersigned on or before the 7th October 1931.

Lot No. I.—Premises No. 4A, Golak Dutt Lane, Ahiritola, Calcutta. Description of the house—A two-storied building with two rooms in the ground floor, and two in the second floor, separate kitchen, latrine and water tap and small courtyard, situated on a plot of land measuring about 2 cottah and 1 chittak (Sutanatti Lakhraj).

Lot No. II.—A permanent mokarari holding of Rs. 3-8 under Babu Girindra Nath Ghosh and others of Chagharia, police-station Bongaon, district Jessore, comprised of a plot of land measuring about 4½ cottahs situated at Matiganj Bazar of the Bongaon subdivision of the district of Jessore, with a four thatched corrugated tin house with verandah with a small walled up courtyard just on the Jessore-Calcutta Road.

K. G. MORSHED, Collector of Jessore.

In the Court of the Additional Sub-Judge of Jessore-Khulna at Jessore.

MONEY EXECUTION CASE No. 4 OF 1931.

Registered Jessore Loan Company, Limited, decree-holders,

versus

Kalipada Ghose and others, judgment-debtors.

THE following immovable property of the judgment-debtors will be sold at auction sale at 12 noon on the 5th October 1931 by the Nazir of the Court in the above-mentioned execution case for realisation of the decretal amount and costs amounting to Rs. 12,418-7-6 under the decree in money suit No. 410 of 1926 of the Court of the Subordinate Judge of Jessore.

Schedule of property.

1. Eight annas share of whatever right, title and interest the judgment-debtors have in tauzi No. 41-2, hishya of Jessore Collectorate, mahal mauza Bhomebhag, pargana Ishafpur within the district of Jessore, bearing an annual revenue of Rs. 683-15-2 pies. Approximate value, Rs. 500.

2. Sixteen pies share of whatever right, title and interest the judgment-debtors have in tauzi No. 23-1 hishya of Jessore Collectorate, mahal mauza Bishnupur, pargana Ishafpur within the district of Jessore, bearing an annual revenue of Rs. 914-9. Approximate value, Rs. 40.

3. Sixteen annas share of the mokorari ganti of Rs. 579 and whatever right, title and interest the judgment-debtors have in the same under tauzi No. 41-2 hishya of Jessore Collectorate, mahal Bhomebhag, pargana Ishafpur within the district of Jessore. Approximate value, Rs. 250.

S. K. BHATTACHARJI, Addl. Sub-Judge.

Jessore, the 17th September 1931. (1951—1)

In the Court of the Addl. Sub-Judge of Jessore-Khulna at Jessore.

MONEY EXECUTION CASE No. 5 OF 1931.

Registered United Bank of Jessore, Limited, decree-holders,

versus

Kalipada Ghose and others, judgment-debtors.

THE following immovable properties of the judgment-debtors will be sold in auction sale at 12 noon on the 5th October 1931 by the Nazir of the Court in the abovementioned execution case for realisation of the decretal amount and costs amounting to Rs. 5,995-9 under the decree in Money Suit No. 509 of 1926 of the Court of the Subordinate Judge of Jessore :—

Schedule of property.

1. Eight annas share of whatever right, title and interest the judgment-debtors have in tauzi No. 41-2 hishya of Jessore Collectorate, mahal mauza Bhomebhag, pargana Ishafpur within the district of Jessore, bearing an annual revenue of Rs. 683-15-2. Approximate value, Rs. 300.

2. Sixteen pies share of whatever right, title and interest the judgment-debtors have in tauzi No. 23-1 hishya of Jessore Collectorate, mahal mauza Bishnupur, pargana Ishafpur within the district of Jessore, bearing an annual revenue of Rs. 914-9. Approximate value, Rs. 25.

3. Sixteen annas share of the mokorari ganti of Rs. 579 and whatever right, title and interest the judgment-debtors have in the same under tauzi No. 41-2 hishya of Jessore Collectorate, mahal Bhomebhag, pargana Ishafpur within the district of Jessore. Approximate value, Rs. 200.

. BHATTACHARJI, Addl. Sub-Judge.

Jessore, the 17th September 1931. (1952—1)

In the High Court of Judicature at Fort William in Bengal, in insolvency.

NOTICE OF ADJUDICATION ORDER.

No. 125 OF 1931.

Re Dost Mohamed and Fazal Karim, both lately carrying on business in co-partnership as dealers in shoes at No. 3, Bentinck Street, within the local limits of this Court, under the name and style of "The Bentinck Shoe Stores." *Ex parte* the creditors.

Ambica Charan Dey, creditors' solicitor.

ON the 14th day of July 1931, an order was made by the High Court of Judicature at Fort William in Bengal in its insolvency jurisdiction adjudging the above-named as insolvents.

NOTE.—All debts due to the estate should be paid to me.

Dated this 17th day of September 1931.

G. M. FALKNER, Official Assignee.

In the High Court of Judicature at Fort William in Bengal, in insolvency.

NOTICE OF ADJUDICATION ORDER.

No. 223 OF 1931.

Re Gouri Sankar Banka, at present residing at No. 1, Jaga Mohan Mallick Lane, in the town of Calcutta, lately carrying on business as cloth merchant at village Kusthea in the district of Nadia, but at present without any employment, *ex parte* the debtor.

B. K. Bose, debtor's solicitor.

ON the 3rd day of September 1931, an order was made by the High Court of Judicature at Fort William in Bengal in its insolvency jurisdiction adjudging the abovenamed as an insolvent.

NOTE.—All debts due to the estate should be paid to me.

Dated this 17th day of September 1931.

G. M. FALKNER, Official Assignee.

In the High Court of Judicature at Fort William in Bengal, in insolvency.

NOTICE OF ADJUDICATION ORDER.

No. 224 OF 1931.

Re Kathleen (*alias* Tootoo) Abraham, residing at No. 4B, Short Street, in the town of Calcutta, and formerly having earned a living by supplying "out-door meals" and at present unemployed, *ex parte* the debtor in person.

ON the 5th day of September 1931, an order was made by the High Court of Judicature at Fort William in Bengal in its insolvency jurisdiction adjudging the abovenamed as an insolvent.

NOTE.—All debts due to the estate should be paid to me.

Dated this 15th day of September 1931.

G. M. FALKNER, Official Assignee.

In the High Court of Judicature at Fort William in Bengal, in insolvency.

NOTICE OF ADJUDICATION ORDER.

No. 225 OF 1931.

Re Ram Adhin Shah, Sewbaran Shah, Ram Sundar Shah *alias* Sundar Shah, Babu Lal Shah and Sitaram Shah, all residing at No. 160-3, Upper Chitpur Road, and lately carrying on business in pulses at No. 161, Upper Chitpur Road aforesaid, in co-partnership with Jokhan Shah, Bechulal Shah and Biswa Nath Shah, the last three being infants under the age of 18 years, under the name and style of Ramadhin Sewbaran and also all in co-partnership lately carrying on business in grocery at No. 295, Upper Chitpur Road aforesaid, under the name and style of Sitaram Biswanath, all at present having no occupation, *ex parte* the debtors.

Abhash Chandra Ghosh, debtors' solicitor.

ON the 7th day of September 1931, an order was made by the High Court of Judicature at Fort William in Bengal in its insolvency jurisdiction adjudging the abovenamed as insolvents.

NOTE.—All debts due to the estate should be paid to me.

Dated this 16th day of September 1931.

G. M. FALKNER, Official Assignee.

In the High Court of Judicature at Fort William in Bengal, in insolvency.

NOTICE OF ADJUDICATION ORDER.

No. 228 of 1931.

Re Godhraj Chiranjilal, a firm carrying on business at No. 101, Upper Circular Road and in No 63/5, Mechua Bazar Street in the town of Calcutta, as retail dealers in Atta, etc., and lately carrying on business under the style of Gulzarilal Jhabermull at No 63/5, Mechua Bazar Street, in Calcutta aforesaid, as dealers in Atta, the partners whereof are Gulzarilal Agarwalla, Nursingdas Agarwalla and Godhraj Agarwalla, all residing at No. 63-5, Mechua Bazar Street in Calcutta aforesaid, *ex parte* the debtors

P. D. Himatsingka, debtor-firm's solicitor

ON the 10th day of September 1931, an order was made by the High Court of Judicature at Fort William in Bengal in its insolvency jurisdiction adjudging the abovenamed firm as insolvent.

NOTE.—All debts due to the estate should be paid to me.

Dated this 15th day of September 1931.

G. M. FALKNER, Official Assignee.

In the High Court of Judicature at Fort William in Bengal, in insolvency.

NOTICE OF ADJUDICATION ORDER.

No. 229 of 1931.

Re Horace Alaric Brown, residing at No. 44/1, Temple Street, in the town of Calcutta, a service-holder, *ex parte* the debtor in person.

ON the 11th day of September 1931, an order was made by the High Court of Judicature at Fort William in Bengal in its insolvency jurisdiction adjudging the abovenamed as an insolvent.

NOTE.—All debts due to the estate should be paid to me.

Dated this 16th day of September 1931.

G. M. FALKNER Official Assignee.

In the High Court of Judicature at Fort William in Bengal, in insolvency.

NOTICE OF ADJUDICATION ORDER.

No. 231 of 1931.

Re Edmund Julian DuCasse, residing at No. 11-A, Hira Lal Das Street, Calcutta, and employed as an assistant in the office of the Deputy Inspector-General of Police, Intelligence Branch, at No. 13, Lord Sinha Road, Calcutta, *ex parte* the debtor in person.

ON the 11th day of September 1931, an order was made by the High Court of Judicature at Fort William in Bengal in its insolvency jurisdiction adjudging the abovenamed as an insolvent.

NOTE.—All debts due to the estate should be paid to me.

Dated this 16th day of September 1931.

G. M. FALKNER, Official Assignee.

In the High Court of Judicature at Fort William in Bengal, in insolvency.

NOTICE OF ADJUDICATION ORDER.

No. 232 of 1931.

Re Baidya Nath Bera, residing at No. 4, Woomes Dutt Lane, and lately carrying on business as a seller of curd at No. 66-4, Strand Road, in the town of Calcutta, at present without any occupation, *ex parte* the debtor in person.

ON the 11th day of September 1931, an order was made by the High Court of Judicature at Fort William in Bengal in its insolvency jurisdiction adjudging the abovenamed as an insolvent.

NOTE.—All debts due to the estate should be paid to me.

Dated this 17th day of September 1931.

G. M. FALKNER, Official Assignee.

In the High Court of Judicature at Fort William in Bengal, in insolvency.

NOTICE OF ADJUDICATION ORDER

No. 233 of 1931.

Re Aratoon Malcolm, residing at No. 7, Rowdon Street, in the town of Calcutta, and lately residing at suite No. 4, Harrington Mansions, at No. 8, Harrington Street, in Calcutta aforesaid, and lately carrying on business as a broker in gunny at room No. 44 at Stephens House, at No 4, Dalhousie Square, East, in Calcutta aforesaid, and now carrying on business as a gunny broker at No. 5, Clive Row, in Calcutta aforesaid, *ex parte* the debtor

Akhil Bose & Co., debtor's solicitors.

ON the 11th day of September 1931 an order was made by the High Court of Judicature at Fort William in Bengal in its insolvency jurisdiction adjudging the abovenamed as an insolvent.

NOTE.—All debts due to the estate should be paid to me.

Dated this 18th day of September 1931.

G. M. FALKNER, Official Assignee.

In the High Court of Judicature at Fort William in Bengal, in insolvency.

NOTICE OF ADJUDICATION ORDER.

No. 234 of 1931.

Re Nafar Chandra Ghose, residing and carrying on business as a butter-seller at No 123-124, Sir Stuart Hogg Market, Butter Range, in the town of Calcutta, *ex parte* the debtor in person.

ON the 14th day of September 1931, an order was made by the High Court of Judicature at Fort William in Bengal in its insolvency jurisdiction adjudging the abovenamed as an insolvent.

NOTE.—All debts due to the estate should be paid to me.

Dated this 18th day of September 1931.

G. M. FALKNER, Official Assignee.

In the High Court of Judicature at Fort William in Bengal, in insolvency.

NOTICE OF ADJUDICATION ORDER.

No. 235 of 1931.

Re James Rowland Hopper, residing at No 25, Ripon Street, in the town of Calcutta, an employee of the Government of India Central Publication Branch, 3, Government Place, West, Calcutta, *ex parte* the debtor in person.

ON the 16th day of September 1931, an order was made by the High Court of Judicature at Fort William in Bengal in its insolvency jurisdiction adjudging the abovenamed as an insolvent.

NOTE.—All debts due to the estate should be paid to me.

Dated this 18th day of September 1931.

G. M. FALKNER, Official Assignee.

In the Court of the Sub-Judge at Asansol.

Section 19(2) of the Provincial Insolvency Act.

INSOLVENCY CASE No. 32 of 1931.

NOTICE is hereby given to his creditors that the insolvency petition filed by H. A. Priddle, shunter, East Indian Railway, Asansol, has been admitted and the 9th October 1931 has been fixed for hearing thereof.

J. C. NEOGI, Sub-Judge.

Asansol, the 9th September 1931. (1906—1)

In the Court of the Sub-Judge at Asansol.

Section 19(2) of the Provincial Insolvency Act.

INSOLVENCY CASE No. 40 of 1931.

NOTICE is hereby given to his creditors that the insolvency petition filed by F. Martin, driver, East Indian Railway, Asansol, has been admitted and the 9th October 1931 has been fixed for hearing thereof.

J. C. NEOGI, Sub-Judge.

Asansol, the 9th September 1931. (1907—1)

In the Court of the Sub-Judge at Asansol.

Section 19(2) of the Provincial Insolvency Act.

INSOLVENCY CASE No. 51 OF 1931.

NOTICE is hereby given to his creditors that the insolvency petition filed by H. S. Peters, guard, East Indian Railway, Asansol, has been admitted and the 9th October 1931 has been fixed for hearing thereof.

J. C. NEOGI, Sub-Judge.

Asansol, the 9th September 1931. (1908—1)

In the Court of the Sub-Judge at Asansol.

Section 19(2) of the Provincial Insolvency Act.

INSOLVENCY CASE No. 29 OF 1931.

Sachi Nandan Bhattacharjee, insolvent.

NOTICE is hereby given to his creditors that the insolvency petition filed by Sachi Nandan Bhattacharjee has been admitted and 13th November 1931 has been fixed for hearing thereof.

J. C. NEOGI, Sub-Judge.

Asansol, the 10th September 1931. (1909—1)

In the Court of the Sub-Judge at Asansol.

Notice under section 19 (2) of the Provincial Insolvency Act.

INSOLVENCY CASE No. 4 OF 1931.

NOTICE is hereby given to his creditors that the insolvency petition filed by Rajani Kanta Tewari has been admitted and 2nd October 1931 has been fixed for hearing thereof.

J. C. NEOGI, Sub-Judge.

Asansol, the 14th September 1931. (1940—1)

In the Court of the District Judge of Burdwan.

INSOLVENCY CASE No. 26 OF 1931.

NOTICE is hereby given to the creditors that a petition has been filed by a creditor, Anil Krishna Kar, at Joteram police-station, Burdwan, for adjudging Phanindra Narain Basu of Haripur, police-station Raina, district Burdwan, an insolvent and that the 29th day of September 1931 has been fixed for hearing the petition.

J. DE, District Judge.

Burdwan, the 12th September 1931. (1912—1—1957)

ORDER OF ADJUDICATION.

Section 27 of the Provincial Insolvency Act, V of 1920.

In the Court of the District Judge at Chittagong.

INSOLVENCY APPLICATION No. 19 OF 1931.

PURSUANT to a petition, dated 21st May 1931, filed by Ramesh Chandra De, son of Kailash Chandra De of Rangunia, police-station Rangunia, Chittagong, and on the application of the petitioner and on reading the petition and hearing the pleader, it is ordered that the debtor be and the said debtor is hereby adjudged insolvent.

It is further ordered that the debtor do apply for his discharge by 19th February 1932.

Dated this 18th day of August 1931.

J. YOUNIE, District Judge.

(1883—1—1960)

NOTICE TO DEBTORS OF THE DATE OF HEARING OF AN INSOLVENCY PETITION.

Section 19 of the Provincial Insolvency Act, V of 1920.

In the Court of the District Judge at Chittagong.

INSOLVENCY APPLICATION No. 35 OF 1931.

WHEREAS (1) Munshi Mahammed Ibrahim Sawdagor, son of Hazi Yar Mahammad, (2) Abdul Hakim Choudhury, son of late Yar Ali Choudhury, of Dhalal, at present Boxirhat, Chittagong, have applied to this Court, by a petition, dated 14th day of August 1931, to have Dinabondhu Pal, son of Rohidas Pal, of Putibila, police-station Maheskhali, Chittagong, declared an insolvent under the Provincial Insolvency Act, V of 1920, this is to give notice to the said debtor and all concerned that the Court has fixed the 30th day of September 1931 for the hearing of the aforesaid petition and the examination of the petitioners.

J. YOUNIE, District Judge.

Chittagong, the 11th September 1931.

(1935—1)

In the 3rd Court of the Sub-Judge of Dacca.

INSOLVENCY CASE No. 50 OF 1931.

Purna Chandra Mahim Chandra Saha, a firm carrying on business of tejarati in co-partnership with (1) Purna Chandra Saha, (2) Mahim Chandra Saha, sons of late Dengu Charan Saha, at Beraid, police-station Tejgaon, district Dacca, petitioner.

THE creditors concerned to take notice that the above-mentioned petitioner has applied to this Court on 28th August 1931 for being adjudicated insolvent and the Court has fixed the date on 30th September 1931 at 11 o'clock for hearing of the said application and for examination of the applicant.

S. C. SIL, Senior Sub-Judge.

Dacca, the 12th September 1931. (1936—1)

In the Court of the District Judge of Dinajpur.

INSOLVENCY CASE No. 48 OF 1931.

MAHAMMAD MAJIBAR RAHMAN, son of Asgar Ali Chaudhury, resident of Sangaon, police-station Baliadangi, district Dinajpur, has applied to this Court to be adjudicated insolvent. The Court has fixed the 30th day of September 1931 for examination of the petitioner at Dinajpur.

[ILLEGIBLE], *for* District Judge.

Dinajpur, the 18th September 1930. (1956—1)

In the Court of the District Judge of Jalpaiguri.

INSOLVENCY CASE No. 62 OF 1931.

KASIMUDDIN MAHAMMAD, son of late Kutubuddin Mahammad, resident of Kharia Najirpara, police-station and district Jalpaiguri, has applied to this Court to be adjudicated an insolvent. The Court has fixed the 8th day of October 1931 for examination of the petitioner at Jalpaiguri.

[ILLEGIBLE], *for* District Judge.

Dinajpur, the 18th September 1931. (1955—1)

NOTICE OF ADJUDICATION ORDER.

In the Court of the District Judge of Noakhali.

INSOLVENCY CASE No. 1 OF 1931.

Re Asabuddin, son of late Mohammad Nasir of Haramian, police-station Sandvip, district Noakhali, the debtor in person.

ON the 8th day of August 1931, an order was made by the District Judge of Noakhali in his insolvency jurisdiction adjudging the abovenamed as an insolvent.

B. M. MITRA, District Judge.

Noakhali, the 15th August 1931. (1910—1)

In the Court of the District Judge of Noakhali.

INSOLVENCY CASE No. 4 OF 1931.

NOTICE is hereby given that Serajal Haque Mia, son of late Ismail Majhi, of Char Parbati, police-station Companiganj in the district of Noakhali, has, on the 20th May 1931, applied to this Court for being adjudged an insolvent and the 26th September 1931 has been set down for hearing of the application.

B. M. MITRA, District Judge.

Noakhali, the 10th September 1931. (1930—1)

ORDER OF ADJUDICATION.

Section 27 of the Provincial Insolvency Act, V of 1920.

In the Court of the District Judge of Pabna and Bogra.

INSOLVENCY CASE No. 7 OF 1931.

Re Kanai Lal Roy, son of late Biswa Nath Roy of Dugachi Kulaua, police station and district Pabna, debtor-applicant.

On the 2nd day of September 1931, an order was made by the District Judge of Pabna and Bogra in its insolvency jurisdiction adjudging the abovenamed debtor an insolvent. He will apply for discharge within a year.

K. C. CHUNDER, District Judge.

Pabna, the 10th September 1931. (1892—1)

ORDER OF DISCHARGE.

Section 41(2)(*a*) of the Provincial Insolvency Act, V of 1920.

In the Court of the District Judge of Pabna and Bogra.

INSOLVENCY CASE No. 33 OF 1930.

Re Khorsed Ali Miah, son of late Jamiruddin Miah, of Pabna Raghabpur, police-station and district Pabna, debtor-insolvent.

PURSUANT to a petition for discharge filed by the insolvent on 6th March 1931 and upon considering the report of the Receiver as to the conduct of the insolvent and on examining him, it is ordered that the said insolvent be granted an absolute discharge under the Provincial Insolvency Act.

Dated Pabna, the 15th September 1931.

K. C. CHUNDER, District Judge.

(1943—1)

In the Court of the District Judge of Pabna and Bogra.

INSOLVENCY CASE No. 45 OF 1931.

WHEREAS the creditor firm in the name and style of Maharaj Harendra Kumar Roy Choudhury of No. 40, Balaram Mojumdar Street, Calcutta, has applied in this Court for declaring the debtors (1) Radhika Lal Choudhury, (2) Satchidananda Choudhury, (3) Joy Govinda Choudhury and (4) Lakshmi Narayan Choudhury, sons of late Jaladhar Choudhury, and members of a Hindu joint-family of Chak-Shohagpur, police-station Belkuchi and district Pabna, insolvents, this is to give notice to all the debtors that the Court has fixed the 6th October 1931 for hearing of the aforesaid petition and for examination of the debtors.

K. C. CHUNDER, District Judge.

Pabna, the 15th September 1931. (1945—1)

In the Court of the District Judge of Pabna and Bogra.

INSOLVENCY CASE No. 46 OF 1931.

WHEREAS Srikantha Nath Sutradhar, son of late Sadhu Charan Sutradhar, of Menda, police-station Faridpur, and district Pabna, has applied to this Court, by a petition dated 8th September 1931, to be declared an insolvent, this is to give notice to all his creditors that the Court has fixed the 8th October 1931 for hearing of the aforesaid petition and for examination of the debtor.

K. C. CHUNDER, District Judge.

Pabna, the 14th September 1931. (1946—1)

ORDER ANNULLING ADJUDICATION.

Section 43 of the Provincial Insolvency Act, V of 1920.

In the 4th Court of the Sub-Judge at Alipore.

INSOLVENCY APPLICATION No. 378 OF 1930.

Surendranath Pandit, applicant.

WHEREAS Sarbeswar Mukherjee and Benoy Krishna Mukherjee *alias* Benoy Krishna Banerjee *alias* Kisto of 32, Harish Mukherjee Road, Bhowanipore, does neither appear nor apply for their discharge within the specified time fixed for hearing, it is ordered that the order of adjudication, dated 27th January 1931, against the debtors be and the same is hereby annulled.

Dated this 7th day of August 1931.

S. N. ROY, Sub-Judge.

ORDER ANNULLING ADJUDICATION.

Section 43 of the Provincial Insolvency Act, V of 1920.

In the 4th Court of the Sub-Judge at Alipore.

INSOLVENCY APPLICATION No. 412 OF 1929.

Harshanath Bhattacharjee, applicant.

WHEREAS Harshanath Bhattacharjee of 5, Justice Dwarkanath Road, Bhowanipore, 24-Parganas, debtor, does not proceed with the application for discharge, it is ordered that the order of adjudication, dated 31st March 1930, against the debtor be and the same is hereby annulled.

Dated this 22nd day of August 1931.

S. N. ROY, Sub-Judge.

ORDER ANNULLING ADJUDICATION.

Section 43 of the Provincial Insolvency Act, V of 1920.

In the 4th Court of the Sub-Judge at Alipore.

INSOLVENCY APPLICATION No. 439 OF 1930.

Shaik Hakku Jola, applicant.

WHEREAS Shaik Hakku Jola of 7, Justice Dwarka Nath Road, Bhowanipore, 24-Parganas, debtor, does neither appear nor apply for his discharge within the specified time fixed for hearing, it is ordered that the order of adjudication, dated 3rd August 1931, against the debtor be and the same is hereby annulled.

Dated this 12th day of September 1931.

S. N. ROY, Sub-Judge.

ORDER ANNULLING ADJUDICATION.

Section 43 of the Provincial Insolvency Act, V of 1920.

In the 4th Court of the Sub-Judge at Alipore.

INSOLVENCY APPLICATION No. 440 OF 1930.

Kalipada Mistry, applicant.

WHEREAS Kalipada Mistry of Ram Rampur, Falta, 24-Parganas, debtor, does neither appear nor apply for his discharge within the specified time fixed for hearing, it is ordered that the order of adjudication, dated 3rd March 1931, against the debtor be and the same is hereby annulled.

Dated this 12th day of September 1931.

S. N. ROY, Sub-Judge.

In the 4th Court of the Sub-Judge of 24-Parganas.

INSOLVENCY CASE No. 342 OF 1931.

S. Wheatley of 36, Traffic Quarters, Narikeldanga, 24-Parganas, applicant.

To Mohadeo Lal and Brothers, of 1, Tikiapara Road, Howrah, and others, creditors.

ON the 27th day of August 1931, it was ordered that the matter of the petition of the applicant be heard on the 5th day of October 1931 and that the said applicant do attend to be examined by this Court on that date.

S. N. ROY, Sub-Judge.

Alipore, the 29th August 1931. (1858—1—1969)

In the 4th Court of the Sub-Judge of 24-Parganas.

INSOLVENCY CASE No. 343 OF 1931.

Bajari Show, of 34, Munshiganj Road, Daulpati, 24-Parganas, applicant.

To Birsun Show, of 4, Watganj Street, Daulpati, 24-Parganas, and others, creditors.

ON the 27th day of August 1931 it was ordered that the matter of the petition of the applicant be heard on the 5th day of October 1931 and that the said applicant do attend to be examined by this Court on that date.

S. N. ROY, Sub-Judge.

Alipore, the 29th August 1931. (1859—1—1970)

In the 4th Court of the Sub-Judge of 24-Parganas.

INSOLVENCY CASE No. 344 OF 1931.

Bejoy Chandra Koyal, of Akra Road, Matiaburuz, 24-Parganas, applicant.

To Syed Akhmad of Mudiali, Rameshwarpore, Garden Reach, 24-Parganas, and others, creditors.

ON the 27th day of August 1931, it was ordered that the matter of the petition of the applicant be heard on the 5th day of October 1931 and that the said applicant do attend to be examined by this Court on that date.

S. N. ROY, Sub-Judge.

Alipore, the 29th August 1931. (1860—1—1971)

In the 4th Court of the Sub-Judge of 24-Parganas.

INSOLVENCY CASE No. 346 OF 1931.

Sudhir Kumar Ray Chaudhury of 40, Bakul Bagan Road, Bhowanipore, 24-Parganas, applicant.

To Bhagawan Sing Kistiwala of 8, Monoharpukur Road, Tollygunge, Calcutta, and others, creditors.

ON the 28th day of August 1931, it was ordered that the matter of the petition of the applicant be heard on the 5th day of October 1931 and that the said applicant do attend to be examined by this Court on that date.

S. N. ROY, Sub-Judge.

Alipore, the 29th August 1931. (1861—1—1972)

In the 4th Court of the Sub-Judge of 24-Parganas.

INSOLVENCY CASE No. 347 OF 1931.

Amulya Krishna Ghosh *alias* Amulya Kumar Ghosh of 47-8, Tenara Road, Entally, 24-Parganas, applicant.

To Fani Bhushan Mukherjee of 61, Chaulpatty Road, Bhowanipore and others, creditors.

ON the 28th day of August 1931, it was ordered that the matter of the petition of the applicant be heard on the 5th day of October 1931 and that the said applicant do attend to be examined by this Court on that date.

S. N. ROY, Sub-Judge.

Alipore, the 29th August 1931. (1862—1—1973)

In the 4th Court of the Sub-Judge of 24-Parganas.

INSOLVENCY CASE No. 348 OF 1931.

Anath Bandhu Sircar at present of 8, Madan Chatterjee Lane, Bhowanipore, 24-Parganas, applicant.

To Raj Kumari Dasi of 26, Darpanarain Tagore Street, Calcutta, and others, creditors.

ON the 29th day of August 1931, it was ordered that the matter of the petition of the applicant be heard on the 5th day of October 1931 and that the said applicant do attend to be examined by this Court on that date.

S. N. ROY, Sub-Judge.

Alipore, the 31st August 1931. (1863—1—1974)

In the 4th Court of the Sub-Judge of 24-Parganas.

INSOLVENCY CASE No. 350 OF 1931.

W. A. Symons of 16, loco quarters, Narikeldanga, 24-Parganas, applicant.

To Mahadeo Lall and Brothers, of 1, Tikiapara Road, Howrah, and others, creditors.

ON the 31st day of August 1931, it was ordered that the matter of the petition of the applicant be heard on the 5th day of October 1931 and that the said applicant do attend to be examined by this Court on that date.

S. N. ROY, Sub-Judge.

Alipore, the 1st September 1931. (1864—1—1975)

In the 4th Court of the Sub-Judge of 24-Parganas.

INSOLVENCY CASE No. 336 OF 1931.

Ram Charan Baksi of Behala, 24-Parganas, applicant.

To Gurulal Matilal of Sutapatty, Barabazar, Calcutta, and others, creditors.

ON the 31st day of August 1931, it was ordered that the matter of the petition of the applicant be heard on the 5th day of October 1931 and that the said applicant do attend to be examined by this Court on that date.

S. N. ROY, Sub-Judge.

Alipore, the 3rd September 1931. (1865—1—1976)

In the 4th Court of the Sub-Judge of 24-Parganas.

INSOLVENCY CASE No. 338 OF 1931.

Raghupath Prasad Tewari of 122, Monoharpukur Road, police-station Tollygunge, 24-Parganas, applicant.

To Lal Khan Kabuly of No. 6, Rajendra Road, Bhowanipur, Calcutta, and others, creditors.

ON the 1st day of September 1931, it was ordered that the matter of the petition of the applicant be heard on the 5th day of October 1931 and that the said applicant do attend to be examined by this Court on that date.

S. N. ROY, Sub-Judge.

Alipore, the 3rd September 1931. (1866—1—1977)

In the 4th Court of the Sub-Judge of 24-Parganas.

INSOLVENCY CASE No. 339 OF 1931.

Gofur Meah of Khardah, 24-Parganas, applicant.

To Bharo Sing of Khardah, 24-Parganas, and others, creditors.

ON the 1st day of September 1931, it was ordered that the matter of the petition of the applicant be heard on the 5th day of October 1931 and that the said applicant do attend to be examined by this Court on that date.

S. N. ROY, Sub-Judge.

Alipore, the 3rd September 1931. (1867—1—1978)

In the 4th Court of the Sub-Judge of 24-Parganas.

INSOLVENCY CASE No. 349 OF 1931.

Subodh Chandra Rai of 23, Ultadanga, Manicktala, 24-Parganas, applicant.

To Jogendra and Surendra Nath Kundu of 23, Ultadanga, Calcutta, and others, creditors.

ON the 31st day of August 1931, it was ordered that the matter of the petition of the applicant be heard on the 5th day of October 1931 and that the said applicant do attend to be examined by this Court on that date.

S. N. ROY, Sub-Judge.

Alipore, the 3rd September 1931. (1868—1—1979)

ORDER OF ADJUDICATION.

Section 27 of the Provincial Insolvency Act, V of 1920.

In the 4th Court of the Sub-Judge at Alipore.

INSOLVENCY APPLICATION No. 42 OF 1931.

PURSUANT to a petition, dated 22nd January 1931, filed by Sheik Golam Rasul of 25, Fulbagan Road, Beniapukur, 24-Parganas, debtor, and on the application of the debtor himself and on reading his application and hearing his pleader, it is ordered that the debtor be and the said debtor is hereby adjudged insolvent.

It is further ordered that the debtor do apply for his discharge within six months from this date.

Dated this 31st day of August 1931.

S. N. ROY, Sub-Judge.

(1869—1—1980)

ORDER OF ADJUDICATION.

Section 27 of the Provincial Insolvency Act, V of 1920.

In the 4th Court of the Sub-Judge at Alipore.

INSOLVENCY APPLICATION No. 105 OF 1931.

PURSUANT to a petition, dated 12th March 1931, filed by Mohammed Bux Kassai of 32-6, Manicktollah Main Road, Beliaghata, 24-Parganas, debtor, and on the application of the debtor himself and on reading his application and hearing his pleader, it is ordered that the debtor be and the said debtor is hereby adjudged insolvent.

It is further ordered that the debtor do apply for his discharge within six months from this date.

Dated this 21st day of July 1931.

S. N. ROY, Sub-Judge.

(1870—1—1981)

ORDER OF ADJUDICATION.

Section 27 of the Provincial Insolvency Act, V of 1920.

In the 4th Court of the Sub-Judge at Alipore.

INSOLVENCY APPLICATION No. 210 OF 1931.

PURSUANT to a petition, dated 27th May 1931, filed by Gujrati Miya of 37, Ballygunge Park, police-station Ballygunge, 24-Parganas, debtor, and on the application of the debtor himself and on reading his application and hearing his pleader, it is ordered that the debtor be and the said debtor is hereby adjudged insolvent.

It is further ordered that the debtor do apply for his discharge within six months from this date.

Dated this 31st day of August 1931.

S. N. ROY, Sub-Judge.

(1871—1—1982)

ORDER OF ADJUDICATION.

Section 27 of the Provincial Insolvency Act, V of 1920.

In the 4th Court of the Sub-Judge at Alipore.

INSOLVENCY APPLICATION No. 214 OF 1931.

PURSUANT to a petition, dated 30th May 1931, filed by Mohabir Kurmi of Gouripore, Naihati, 24-Parganas, debtor, and on the application of the debtor himself and on reading his application and hearing his pleader, it is ordered that the debtor be and the said debtor is hereby adjudged insolvent.

It is further ordered that the debtor do apply for his discharge within six months from this date.

Dated this 31st day of August 1931.

S. N. ROY, Sub-Judge.

(1872—1—1983)

ORDER OF ADJUDICATION.

Section 27 of the Provincial Insolvency Act, V of 1920.

In the 4th Court of the Sub-Judge at Alipore.

INSOLVENCY APPLICATION No. 218 OF 1931.

PURSUANT to a petition, dated 2nd June 1931, filed by Harilall, residing at Jaloria Rice Mill at Tollygunge, 24-Parganas, debtor, and on the application of the debtor himself and on reading his application and hearing his pleader, it is ordered that the debtor be and the said debtor is hereby adjudged insolvent.

It is further ordered that the debtor do apply for his discharge within six months from this date.

Dated this 31st day of August 1931.

S. N. ROY, Sub-Judge.

(1873—1—1984)

ORDER OF ADJUDICATION.

Section 27 of the Provincial Insolvency Act, V of 1920.

In the 4th Court of the Sub-Judge at Alipore.

INSOLVENCY APPLICATION No. 234 OF 1931.

PURSUANT to a petition, dated 13th June 1931, filed by C. J. Slade of 134, Loco quarters, Belgachia, 24-Parganas, debtor, and on the application of the debtor himself and on reading his application and hearing his pleader, it is ordered that the debtor be and the said debtor is hereby adjudged insolvent.

It is further ordered that the debtor do apply for his discharge within six months from this date.

Dated this 31st day of August 1931.

S. N. ROY, Sub-Judge.

(1874—1—1985)

ORDER OF ADJUDICATION.

Section 27 of the Provincial Insolvency Act, V of 1920.

In the 4th Court of the Sub-Judge at Alipore.

INSOLVENCY APPLICATION No. 241 OF 1931.

PURSUANT to a petition, dated 16th June 1931, filed by H N. Khanna, of 5-2, Mominpore Road, Kidderpore, 24-Parganas, debtor, and on the application of the debtor himself and on reading his application and hearing his pleader, it is ordered that the debtor be and the said debtor is hereby adjudged insolvent.

It is further ordered that the debtor do apply for his discharge within six months from this date.

Dated this 31st day of August 1931.

S. N. ROY, Sub-Judge.

(1875—1—1986)

ORDER OF ADJUDICATION.

Section 27 of the Provincial Insolvency Act, V of 1920.

In the 4th Court of the Sub-Judge at Alipore.

INSOLVENCY APPLICATION No. 243 OF 1931.

PURSUANT to a petition, dated 9th February 1931, filed by Shiranando Dikshit of 16, Garcha 2nd Lane, Ballygunge, 24-Parganas, debtor, and on the application of the debtor himself and on reading his application and hearing his pleader, it is ordered that the debtor be and the said debtor is hereby adjudged insolvent.

It is further ordered that the debtor do apply for his discharge within six months from this date.

Dated this 31st day of August 1931.

S. N. ROY, Sub-Judge.

(1876—1—1987)

In the Court of the District Judge of 24-Parganas.

INSOLVENCY CASE No. 47 OF 1931.

Matilal Pralhadka of Nawab Saheb's Kuthi, Tollygunge, 24-Parganas, applicant.

To Karba & Co., of 2, Royal Exchange Place, Calcutta, and others, creditors.

ON the 7th day of September 1931 it was ordered that the matter of the petition of the applicant be heard on the 23rd day of November 1931 and that the said applicant do attend to be examined by this Court on that date.

S. K. GANGALI, *for* District Judge.

Alipore, the 8th September 1931. (1879—1—1966)

In the Court of the District Judge of 24-Parganas.

INSOLVENCY CASE No. 48 OF 1931.

Osmond Nicholas Devereax of 9, Dalhousie Square, Calcutta, creditor-applicant.

To George Samonides Roberts of 51-A, Diamond Harbour Road, Ekbalpore, 24-Parganas, debtor.

ON the 7th day of September 1931, it was ordered that the matter of the petition of the applicant be heard on the 5th day of October 1931 and that the said applicant do attend to be examined by this Court on that date.

S. K. GANGALI, *for* District Judge.

Alipore, the 8th September 1931. (1880—1—1967)

In the Court of the District Judge of 24-Parganas.

INSOLVENCY CASE No. 49 OF 1931.

Victor M. Molina of 6, Bishop Lefroy Road, Bhowanipore, 24-Parganas, applicant.

To Hamilton & Co., of 8, Old Court House Street, Calcutta, and others, creditors.

ON the 5th day of September 1931, it was ordered that the matter of the petition of the applicant be heard on the 5th day of October 1931 and that the said applicant do attend to be examined by this Court on that date.

S. K. GANGALI, *for* District Judge.

Alipore, the 8th September 1931. (1881—1—1968)

MR. SACHINDRA NATH ROY CHOWDHURY intends to be enrolled as an Advocate, High Court.

(1813—4—1802)

WANTED a temporary lecturer in Mathematics for the Bethune College, Calcutta, in the Women's Branch of the Bengal Educational Service on Rs. 170 per mensem for one year with effect from the 20th November 1931 or as soon after that date as possible.

2. Candidates should be British Subjects and must not be over 45 years of age. They must possess a first or second class degree of M. A. or M. Sc. of an Indian University or a good Honours degree of a European University with satisfactory evidence of teaching experience.

3. Applications supported by documentary evidence of the qualifications possessed and of age should reach the Principal, Bethune College, on or before the 30th September 1931.

WANTED an Assistant Master (English Teacher) for the Calcutta Model School in the scale of Rs. 50—2—80—3—110. Candidates must apply to the undersigned by the 15th of October 1931. Preference will be given to a Muhammadan candidate.

M. MITRA, Principal (offg.),
David Hare Training College.

WANTED a typist clerk on a time scale of pay of Rs. 40—45-5/2—100 for the office of the Deputy Director of Agriculture, Northern Circle, Rajshahi. None need apply who has not passed at least the Matriculation examination of any recognized University and is not within 25 years of age on the 1st October 1931. Preference will be given to one having good speed in typing and considerable office experience in Government offices. The appointment will be provisional for the present. Apply on or before the 25th September 1931.

A. R. MALIK, Dy. Director of Agriculture,
Northern Circle, Rajshahi.

Post of Professor of Pathology, Medical College, Calcutta, and Bacteriologist to Government of Bengal.

APPLICATIONS are invited for the above post. General private practice is not allowed.

2. Applicants should have considerable practical experience in Bacteriology and Parasitology in Morbid Anatomy and Histology and experience in teaching these subjects.

3. The appointment is open to men belonging to the medical profession in general including members of the Bengal Medical Service.

4. The rate of pay is Rs. 800—50—1,500 (with an overseas pay of £ 30 for overseas candidates) plus a bacteriological allowance of Rs. 225 subject to reduction of 15 per cent. for new appointment now in force. An overseas candidate, if selected, will be entitled to a first class passage out.

5. If a medical man not in Government employ is selected—

(*a*) his appointment will be on contract for three years;

(*b*) the appointment will be terminated on 6 months' notice on either side;

(*c*) the appointment will not be pensioned, but the following special Provident Fund concession will be allowed:—

Personal subscription at 8⅓ per cent. of pay and Government contribution at 75 per cent. of subscription credited half-yearly. Interest will accumulate at the same rate as in the General Provident Fund.

(*d*) The successful candidate will be required to execute an agreement.

Further information will be obtained on enquiry from the Surgeon-General with the Government of Bengal and applications stating all particulars should reach him by the 31st December 1931.

Canvassing will disqualify.

THE Bengal and Madras Service Family Pension Fund which is provisionally managed and assisted by Government has for its object the provision of monthly pensions for the maintenance of the widows and children of subscribers and is open, with certain exceptions, to all active and pensioned members of the Uncovenanted service of Government (except those serving under the Government of Bombay), and to Local Fund servants earning pensions from Government. Some of the special features of the fund are—(1) that widowed daughters incapable of remarriage or children labouring under such mental or bodily infirmities as incapacitate them from earning their livelihood or preclude the possibility of marriage (in case of a daughter) are admitted to its benefits; and (2) that subscribers to the Widows' and Daughters' branches are entitled to a refund of 30 per cent. of the premia paid, should the nominee predecease them after five years of admission. The second quinquennial valuation of the Fund has been completed by the actuary to the Government of India, and his report discloses very favourable results. For forms of application and rules of the Fund apply to the Accountant-General, Bengal, Imperial Secretariat Buildings, Calcutta.

Notice.

IT is hereby notified for general information that the next ordinary examination of candidates for Certificates of Competency as Masters and Serangs of Inland Steam Vessels, under Act I of 1917, will be held at the Port Office, Chittagong, on 13th October, 17th November and 15th December 1931.

Applications to be permitted to go up for the examination for any of the above grade certificates must be made at the Port Office, Chittagong, not later than three days prior to the date of examination, the candidates producing their certificates and testimonials and paying the fees.

A. R. RATTRAY, LIEUT.-COMMDR., R.I.M.,
Nautical Surveyor (offg.).

Chittagong, the 17th September 1931.

Notice.

IT is hereby notified for general information that the next ordinary examination of candidates for Certificates of Competency as Engineers and Engine Drivers of Inland Steam and Motor Vessels, under Act I of 1917, will be held at Chittagong on Mondays, the 5th October, the 2nd November and the 7th December 1931.

Applications to be permitted to go up for the examination for any of the above grade certificates must be made at the Port Office, Chittagong, not later than three days prior to the date of examination, the candidates producing their certificates and testimonials and paying the fees.

A. R. RATTRAY, LIEUT.-COMMDR., R.I.M.,
Nautical Surveyor (offg.).

Chittagong, the 17th September 1931.

Estate Charles Arthur Fisher, deceased.

PURSUANT to section 360 of Act XXXIX of 1925 and section 42 of Act XXVIII of 1866, the creditors and all persons interested in the estate of Charles Arthur Fisher, late an Assistant in the employ of the General Electric Co. (India), Ltd., Calcutta, who died in London on the 21st day of August 1930 and Letters of Administration to whose estate were granted by the High Court, Calcutta, on the 9th day of July 1931, are hereby required to submit particulars of their claims to the undersigned on or before the 15th day of October 1931, after which date the Administrator will distribute the assets, having regard only to the claims of which notice shall then have been received.

ORR, DIGNAM & Co.,
Solicitors to the Administrator.

32, Dalhousie Square, South, Calcutta, 10th September 1931. (1882—1—1955)

Estate Frederick George Bows, deceased.

PURSUANT to section 360 of Act XXXIX of 1925 and section 42 of Act XXVIII of 1866, the creditors and all persons interested in the estate of Frederick George Bows, late of "Claremont," Monghyr (Bihar and Orissa), who died at Calcutta on the 10th day of July 1931, and Letters of Administration to whose estate were granted by the High Court, Calcutta, on the 31st day of August 1931, are hereby required to submit particulars of their claims to the undersigned on or before the 15th day of October 1931, after which date the Administrator will distribute the assets, having regard only to the claims of which notice shall then have been received.

ORR, DIGNAM & CO.,
Solicitors to the Administrator.

32, Dalhousie Square, South, Calcutta, 11th September 1931.

(1891—1—1956)

Notice to Creditors.

Estate Charles Herbert Gonsalves, deceased.

PURSUANT to section 360 of Act XXXIX of 1925 and section 42 of Act XXVIII of 1866, the creditors and all persons interested in the estate of Charles Herbert Gonsalves, late of 44, Middle Road, Entally, Calcutta, who died at Calcutta on the 10th day of July 1931, and probate of whose Will was granted by the High Court, Calcutta, on the 24th day of August 1931, are hereby required to submit particulars of their claims to the undersigned on or before the 19th day of October 1931, after which date the executrices will distribute the assets, having regard only to the claims of which notice shall then have been received.

ORR, DIGNAM & Co.,
Solicitors to the Executrices.

32, Dalhousie Square, South, Calcutta, 12th September 1931.

(1911—1—1959)

Sale Notice.

Under section 88, Sea Customs Act (Act VIII of 1878).

THE firearms and goods shown in the schedule below having lain uncleared in the Custom House for over four months will be sold by public auction, if not cleared by 2 p. m. on Friday, the 25th September 1931.

Inspection may be obtained on application to the Inspector in charge of the Custom House.

List of goods for sale in the Custom House under section 88, Sea Customs Act.

Passengers' Firearms.

865	*Ex* SS. Mandala		Diana Air Gun.
876	„ „	Morkara	Revolver by S. & Wesson, No. 20944, ·450 bore and 3 cartridges.
881	„ „	Margha	Air Pistol by Webley and Scott, No. 13373.
893	„ „	Councillor	Waldon Safety Revolver No. 39 with 99 blank cartridges.
902	„ „	Mulbera	Colt Pistol No. 256630, ·25 bore with 67 cartridges.
903	„ „	Mulbera	Webley Revolver No. 386838, ·450 bore with 13 cartridges.
904	„ „	Angora	D. B. Burglar Gun No. 361062, ·20 bore.
911	„ „	Angora	2 cartridges of ·20 bore.
915	„ „	Tilawa	3 S. B. Guns, ·12 bore, by Harrington & Richards.
944	„ „	Nagoya	D. B. Gun by Manton & Co., ·20 bore, No. 3341.
931	„ „	Gambada	Rifle by Ross Rifle Co., ·22 bore.

Seizures.

398	*Ex* SS. Talamba		A Burmese Sword with wooden scabbard.
400	..		6 Chamber Revolver of ·32 bore, No. 18.

Liquor Remnants.

37 bottles various liquors.

Cargo.

Ex SS. City of Lahore 6 cases of French medicine free from spirit.

Passengers' Baggage.

Ex SS. Takliwa 1 Harmonium in wooden case.

M. SLADE, Collector of Customs (offg.).

Calcutta Custom House, the 12th September 1931.

(1927—2)

Currency Note.

A PORTION of the following Currency Note of the Calcutta circle of issue is stated to have been destroyed and payment of its value has been claimed by the person whose name is shown against the number.

Any other person claiming a right to it is warned to communicate at once with the undersigned.

Registered No.	Note No.	Value.	Name and address of the claimant.
		Rs.	
W.D. 13 of 31-32.	S-64,138826	100	Matilall Basu, 21, Balaram Mazumder Street, Calcutta.

B. C. DUTT, Currency Officer.

Currency Office, Calcutta, the 9th September 1931.

Currency Notes.

PORTIONS of the following Currency Notes of the Calcutta circle of issue are stated to have been destroyed and payment of their value has been claimed by the person whose name is shown against the numbers.

Any other person claiming a right to them is warned to communicate at once with the undersigned.

Registered No.	Notes No.	Value.	Name and address of the claimant.
		Rs.	
WD. 14 of 31 32.	S-29,503372	100	Ambica Charan Banerjee, village Patkelghatta, post-office Kumira, district Khulna.
	S-36,680896	100	
	S-43,01364	100	
	S-41,388111	100	
	S-36,959640	100	

B. C. DUTT, Currency Officer.

Currency Office, Calcutta, the 9th September 1931.

Lost.

THE Government Promissory Note No. 281548 of the 3½ per cent. loan of 1900-01 for Rs. 1,000 originally standing in the name of Sosi Kumor Bose, the proprietor, by whom it was never endorsed to any other person, having been lost, notice is hereby given that payment of the above note and the interest thereupon have been stopped at the Public Debt Office, Imperial Bank of India, Calcutta, and that application is about to be made for the issue of duplicate in favour of the proprietor. The public are cautioned against purchasing or otherwise dealing with the abovementioned security.

Name of the proprietor—Sosi Kumer Bose.

Residence—Bhorakar, district Dacca.

(1878—3 -1962)

Lost.

RECEIPTS numbered 19846 and 4233, dated 10th July 1931, and granted by the Public Debt Office, Imperial Bank of India, on submission of the undermentioned Government Promissory Notes. Notice of loss has been given to the Public Debt Office, Imperial Bank of India, and the undersigned is about to apply for surrender of the securities :—

G. P. Note No.	Loan.	Amount.	Holder's Name.	Receipt No.
		Rs.		
230659	3½ per cent., 1854-55.	500	Tusar Ranjan Banerjee.	19846
226805	Ditto	500	Ditto	,,
210587	Ditto	200	Ditto	,,
219802	Ditto	800	Ditto	,,
239792	Ditto	1,000	Ditto	,,
300 07	3½ per cent., 1900-01.	100	Ditto	,,
347712-13	Ditto	100 each	Ditto	,,
300091	Ditto	100	Ditto	,,
335865	Ditto	100	Ditto	,,
356434	Ditto	2,200	Ditto	,,
342586	3½ per cent., 1865	100	Ditto	,,
370584-85	Ditto	100 each	Ditto	,,
378040	Ditto	100	Ditto	,,
209416	3½ per cent., 1900-01.	100	Ditto	4233
325950	Ditto	1,000	Ditto	,,
287901	Ditto	500	Ditto	,,
355650	3½ per cent., 1865.	1,000	Ditto	,,

Name of the Proprietor—Tusar Ranjan Banerjee.

Residence—15, Joykissen Street, Post-office Uttarpara, Howrah.

(1932—1—1964)

Lost.

THE Government Promissory Note No. 001999 of the 6 per cent. loan of 1931 for Rs. 500, originally standing in the name of the Imperial Bank of India and last endorsed to Radharani Debi, the proprietress, by whom it was never endorsed to any other person, having been lost, notice is hereby given that payment of the above note and the interest thereupon have been stopped at the Public Debt Office, Imperial Bank of India, Calcutta, and that application is about to be made for the issue of duplicate in favour of the proprietress. The public are cautioned against purchasing or otherwise dealing with the abovementioned security.

Name of the Advertiser—Jugal Kissore Dirghangi.

Residence—Post-office Santragachi, village Dharsa, district Howrah.

(1947—3—1988)

In the matter of the Indian Companies Act, VII of 1913, and

In the matter of the Dimla Raj Bank, Limited (in liquidation).

A MEETING of the creditors of the Dimla Raj Bank, Limited (in liquidation), will be held at the registered office of the Bank at Lalkuti, Dhap, Rangpur, on Saturday, the 3rd October 1931, at 6 p.m. All creditors of the above Bank are requested to attend the said meeting.

R K. BANERJEE, Liquidator.

Rangpur, the 12th September 1931. (1929—1 -1961)

In the matter of the Indian Companies Act, VII of 1913, and

In the matter of the Bhola Hosiery Factory, Ltd. (in liquidation).

UNDER section 217 of the Indian Companies Act, a meeting of the members of the Bhola Hosiery Factory, Ltd. (in liquidation), will be held on 1st November 1931, at 8 a. m., at the house of Babu Amulya Kishore Chakravorty, Pleador, Bhola.

A. CHAKRAVORTY, Liquidator.

Bhola, the 12th September 1931. (1937—1—1963)

Imperial Library.

(Secretariat Buildings, 6, Esplanade East, Calcutta.)
Open on—

Weekdays and Saturdays from 10 A.M. to 7 P.M.
Sundays and Gazetted holidays from 2 P.M. to 5 P.M.

THE Imperial Library is also a Lending Library. It is free to all except children. There is no subscription to pay.

K. M. ASADULLAH, Librarian.

CINCHONA FACTORY PRODUCTS.

By order of the Government of Bengal Cinchona Factory Products as manufactured and packed at the Cinchona Factory, Mungpoo, Darjeeling district, will be sold and distributed by the Superintendent of the **Presidency Jail**, *in original packages* as received from the Mungpoo Factory, at the rates herein noted **from the 1st May 1926** :—

Quinine Sulphate.

For 60 lbs. and upwards at a time .. Rs. 18 per lb.
For 6 lbs. and over but less than 60 lbs. at a time .. .. .. ,, 19 ,,
For any quantity less than 6 lbs. .. ,, 20 ,,

Quinine Hydrochloride.

For 60 lbs. and upwards at a time .. Rs. 23 per lb.
For 6 lbs. and over but less than 60 lbs. at a time .. .. .. ,, 24 ,,
For any quantity less than 6 lbs. .. ,, 25 ,,

Quinine Di-Hydrochloride.

For 60 lbs. and upwards at a time .. Rs. 25 per lb.
For 6 lbs. and over but less than 60 lbs. at a time .. .. .. ,, 26 ,,
For any quantity less than 6 lbs. .. ,, 27 ,,

Quinidine Sulphate.

For 60 lbs. and upwards at a time .. Rs. 20 per lb.
For 6 lbs. and over but less than 60 lbs. at a time .. .. .. ,, 21 ,,
For any quantity less than 6 lbs. .. ,, 22 ,,

Cinchonidine Sulphate.

For 60 lbs. and upwards at a time .. Rs. 25 per lb
For 6 lbs. and over but less than 60 lbs. at a time .. .. .. „ 26 „
For any quantity less than 6 lbs. .. „ 27 „

Cinchonine Sulphate.

For 60 lbs. and upwards at a time .. Rs. 12 per lb.
For 6 lbs. and over but less than 60 lbs. at a time .. .. .. „ 13 „
For any quantity less than 6 lbs. .. „ 14 „

Cinchona Febrifuge (Powder).

For 60 lbs. and upwards at a time .. Rs. 9 per lb.
For 6 lbs. and over but less than 60 lbs. at a time .. .. .. „ 9 „
For any quantity less than 6 lbs. .. „ 10 „

Cinchona Febrifuge (Tablets).

For 60 lbs. and upwards at a time .. Rs. 10 per lb.
For 6 lbs. and over but less than 60 lbs. at a time .. .. .. „ 10 „
For any quantity less than 6 lbs. .. „ 11 „

Quinoidine (Tablets).

For 60 lbs. and upwards at a time .. Rs. 5 per lb.
For 6 lbs. and over but less than 60 lbs. at a time .. .. .. „ 5 „
For any quantity less than 6 lbs. .. „ 6 „

Quinoidine (in Mass).

For 60 lbs. and upwards at a time .. Rs. 4 per lb.
For 6 lbs. and over but less than 60 lbs. at a time .. .. .. „ 4 „
For any quantity less than 6 lbs. .. „ 5 „

Cinchona Bark (in 50 pound original bags).

Per bag .. .. .. Rs 25.

Quinine Tablets — per box of 200 tablets each. Rs. 2-8 (Bengal) Rs. 3 (outside Bengal). Rs. 15-8-0 per lb.

Transit charges extra in every case.

Quinine Sulphate is for sale to Government Institutions and Missionaries only. It is not for sale to Private Firms or the General Public.

Cinchona Febrifuge in Powder and Tablet form (when in stock) is for sale to Government Institutions, Missionaries and the General Public.

Quinine Sulphate will be supplied to Hospitals and Dispensaries of this Presidency only at the wholesale rate of Rs. 18 per lb., irrespective of quantities. For all other purchasers the rates given above will apply.

Five and ten boxes of Quinine Tablets are sold to the public at the concession rates which will be intimated on application.

Provinces other than Bengal, Bihar and Orissa and Assam will get their supplies of Sulph. Quinine from the Director, Botanical Survey of India, Sibpur, Howrah.

Local sale at the jail gate from 10 to 12 noon.

The system of payment is by—*Cash in advance*—by "*Treasury Challans*," which should accompany the order or indent.

In cases where this is not possible, payment should be made by "*Remittance Transfer Receipts*" or crossed "*Cheques.*"

Indents unaccompanied by cash in advance will be sent Value Payable Post. Credit sale is not allowed except under special circumstances.

In the case of *Government officers* payments will be recovered by *Book Transfer*, i.e., *Countersigned Invoices*, in the event of *Cash* not accompanying the indent by "*Treasury Challans*," *Remittance Transfer Receipt* or *Cheque.*

2. Price and postage must accompany the price of the drug (when the drug is required by post).

The name of the Railway and Steamer Station or Post Office must be written distinctly when the parcels are required by Rail, Steamer or by Post. Railway parcels are sent by passenger train only.

A scale of postage is given below.

	1 oz.	2 oz.	4 oz.	¼ lb.	½ lb.	1 lb.
	As.	As.	As.	As.	As.	Rs. A.
Quinine Sulph. ..	..	..	6	6	10	0 10
Cinchona Feb. ..	..	..	6	6	10	0 10
Cinchona Feb. Tablets	..	..	6	6	10	0 10
Quinoidin Tablets ..	..	..	..	..	..	1 2
Quinine Hydrochlor. ..	4	4	6	6	..	0 10
Quinine Di-hydrochlor.	4	4	6	6	..	0 10
Quinine Tablets ..	..	..	6	6	10	0 10

	1½ lb.	2 lb.	3 lb.	4 lb.	5 lb.	6 lb.
	Rs. A.	Rs. A.	Rs A.	Rs. A.	Rs. A.	Rs. A.
Quinine Sulph. ..	0 14	1 2	1 6	1 14	2 6	2 14
Cinchona Feb. ..	0 14	0 14	1 6	1 10	1 14	2 6
Cinchona Feb. Tablets	1 2	1 2	1 10	1 14	2 6	2 14
Quinoidine Tablets ..	..	2 2	3 2	..	..	..
Quinine Hydrochlor. ..	1 0	0 14	1 6	1 10	..	..
Quinine Di-hydrochlor.	1 0	1 2	1 12	2 4	..	..
Quinine Tablets ..	0 14	0 14	1 6	1 10	1 14	2 2

Two different drugs are not packed in the same parcel and postage must be paid separately for each kind.

N.B.—Postage stamps are not accepted as revenue.

Government reserve the right to alter the price without notice.

GOVERNMENT PUBLICATIONS FOR SALE.

At the Bengal Secretariat Book Depôt, Writers' Buildings, Calcutta, and by the following Agents :—

Agents in India.

Messrs. S. K. Lahiri & Co., Printers and Book-sellers, College Street, Calcutta.

Messrs. Thacker, Spink & Co., Calcutta.

Customers in the United Kingdom and the Continent of Europe may obtain the publications either direct from the High Commissioner's Office or through any book-seller.

NOTICE.—Books required for private use can be purchased. Applications should be accompanied by remittance in each case.

All remittances on account of subscriptions to or prices of Gazettes, Indian Law Reports or other Government publications available for sale at the Bengal Secretariat Book Depôt, or for cost of advertisements published in the Gazette, should be made payable to the "Treasurer, Bengal Secretariat, Calcutta." Advices of such remittances, if separately sent, should be addressed to the "Accountant, Bengal Secretariat." All advertisements intended for publication in the *Calcutta Gazette* should be sent direct to the Superintendent, Government Printing, Bengal, Alipore, 24-Parganas.

Books required for the Public Service should be obtained through the Heads of Departments.

NEW PUBLICATIONS ISSUED DURING THE CURRENT QUARTER.

Acts, Bills and Legislative Council Proceedings.

Bengal Act VII of 1930 (Bengal Rural Primary Education Act) in Bengali, Re. 1-13 (1s.).

Bengal Act VI of 1919 (Bengal Food Adulteration Act) as modified up to 1st July 1931. As. 3 (1s.).

Bengal Act V of 1909 (Bengal Excise Act) as modified up to 1st August 1931. Re. 1-1s. (2s.).

Index to Bengal Acts for 1930. As. 2 (1s.).

Miscellaneous Publications.

Administration. Report of the—of Bengal, 1929-30. Rs. 4-12 (7s.).

Annual—Reports for Establishment, Buildings, Railways and Communications, 1929-30. Re. 1-7 (1s.).

Bulletin. No. 50. Investigation of the Oil of Kusum and its application in Soap-making, by Dr. R. L. Datta. As. 3 (1s.).

College. Annual Report on the working of the Carmichael Medical —, Belgachia, Calcutta, 1929 30 As. 8 (1a).

Dispensaries. Annual Report on the working of Hospitals and under the Government of Bengal, 1929 Rs 2 (4a.).

District Boards. Resolution reviewing the Reports on the working of the—in Bengal, 1929-30. As. 7 (3a).

Factories. Annual Report on the administration of the Indian -Act in Bengal, 1930 Rs 3 (1a.).

Forest. Annual Report on –Administration in the Presidency of Bengal, 1929-30. Rs 4-8 (3a.).

History. Of the Burbhum Zilla School, 1931. Rs. 10 (1a.).

Of the Hooghly College, 1931. As. 12 (1a)

Of the Hooghly Collegiate School, 1931. As 9 (1a)

Of the Bankura Zilla School, 1931. Re. 1 (1a)

Hooghly. The Origin and Development of the—Branch School founded in 1834, published 1931 As 8 (1a).

Irrigation Department. Classified List and Distribution Return of Establishment of the—corrected up to 1st July 1931 Rs. 2-11 (1a)

Legislation. Effect of –list for 1930 As. 2 (1a)

List. Of High Schools and Colleges in Bengal corrected up to 31st December 1930. As. 13 (1½a)

Of members of the Bengal Legislative Council, etc., 9th list, dated the 6th July 1931. As. 5 (1a.).

Quarterly Civil -for Bengal corrected up to 1st July 1931. Rs. 3-8 (11a.).

Medical. Annual Report on the working of the Carmichael—College, Belgachia, Calcutta, 1929 30. As 8 (1a)

Mines. By-laws for coal—under section 32 of the Indian Act, 1923, in Guzrati in sheet form. As 6 (1a)

Pharmacopœia and Diet Scales of the Presidency General Hospital, Calcutta, 1930 Re 1 (2a.).

Police. Annual Report on the—Administration of the town of Calcutta and its suburbs, 1930. Re. 1-14 (2a)

Report on the - Administration in the Bengal Presidency, 1930 Rs. 2-10 (1a).

Public Works Department. Classified List and Distribution Return of Establishment (Roads and Buildings) corrected up to 1st July 1931. Rs. 2-3 (2a).

Season and Crop Report of Bengal, 1930 31. As. 13 (2a)

Services. History of—of gazetted and other officers corrected up to 1st July 1931, Part I Rs 15 (Re 1 4a.)

Part II Rs 12 (Re 1-2a.).

Smoke Nuisances. Twenty-fifth Annual Report of the Bengal—Commission, 1930 As 10 (1a)

Stamp. Statistical Return regarding the administration of the - Department in Bengal, 1930-31 As. 8 (1a.)

Survey. Annual Report on the and Settlement Operations in Bengal, 1929-30. Rs 9-12 (9a).

Tropical Medicine. Annual Report of the Calcutta School of - and Hygiene, 1929 30. As 8 (1a)

Wakf. Rules framed under section 11 of the Musalman -Act, 1923, published 1931. As. 9 (1a.).

PUBLICATIONS ISSUED BETWEEN 1st JANUARY AND 30th JUNE 1931.

Acts, Bills and Legislative Council Proceedings.

Proceedings of the Bengal Legislative Council.

For the meetings held on the 9th to 13th, 16th to 18th February 1931 Vol XXXVI, No 1 Rs. 3 5 (8a).

For the meetings held on the 23rd February and 2nd and 3rd March 1931. Vol XXXVI, No 2 Re. 1-4 (3a).

For the meetings held on the 16th to 21st, 23rd to 28th and 30th March 1931 Vol XXXVI, No 3 Rs. 4 2 (12a).

Bengal Act 1 of 1931 (Bengal Embankment Amendment Act) A.1 (6p).

Bengal Act II of 1931 (Bengal Municipal Amendment Act) A.1 (6p)

Bengal Act II of 1882 (Bengal Embankment Act), as modified up to 15th June 1930. Re. 1-2 (2a.).

Bengal Criminal Law Amendment Act, 1925, as modified up to 1st December 1930 As. 3 (1a.).

Bengal Act VII of 1930 (Bengal Rural Primary Education Act) As 2 (1½a.)

Miscellaneous Publications.

Accounts. Question Papers of the Divisional—Examination, 1931. A.1 (1a.).

Agriculture. Annual Report of the Department of—, Bengal, 1929-30. Rs 4-5 (4a.).

Budget. Civil—Estimate for the year 1931-32. Rs. 2 (9a.).

Public Works Department Estimate of Provincial Civil Works in Bengal Presidency, 1931-32. Rs. 2 (3a.).

Public Works Department -Estimate of 60—Civil Works not charged to Revenue in Bengal Presidency, 1931 32. As. 8 (1a.).

Census. Report on the Cattle—of the Bengal Presidency, 1930 Rs. 3-10 (3a.).

Chronological Tables for 1931. As. 2 (1a.).

Cinchona. Sixty-eighth Annual Report of the Government—Plantations and Factory in Bengal, 1929-30. As 9 (1a)

Clerkship. Question Papers for—Examination for 1930 As. 8 (1a.).

Dispensaries. Triennial Report on the working of the Hospitals and under the Government of Bengal, 1926 to 1928. Rs. 2 8 (5a.)

Education. Bengal—Code, 1931. Rs. 4-6 (11a.).

Excise. Report on the Administration of—Department in Bengal, 1929 30. Rs. 6 12 (5a.)

Health. Bengal Public—Report for 1929. Re. 1 (6a.).

Hints. Safety First—, 1931. A. 1 (1a.).

Industries. Annual Administration Report of the Department of , Bengal, 1929-30. Re. 1-13 (3a.).

Instruction. Report on Public —in Bengal, 1929-30. Rs. 1-8 (3a).

Irrigation Department. Classified List and Distribution Return of Establishment of the—corrected up to 1st January 1931 Rs 3 4 (2a.).

Justice. Report on the Administration of Criminal—in the Presidency of Bengal, 1929. Re. 1 1 (2a.).

Report on the Administration of Civil—in the Presidency of Bengal, 1929. As 12 (2a.).

Report on the Administration of Criminal—in the Province of Assam, 1929. Rs. 2 (1½a.).

Report on the Administration of Civil—in the Province of Assam, 1929. Rs 2-4 (1a).

Kanungos. Half-yearly Gradation List of Settlement —corrected up to November 1930. Rs 2 (1½a.).

Land Revenue. Report on the—Administration of the Bengal Presidency, 1929-30. Rs. 5-2 (6a.).

List. Of Members of the Bengal Legislative Council, etc. 8th List, dated 21st January 1931. As. 5 (1a.).

Bengal Quarterly Civil—, corrected up to 1st January 1931. Rs. 3-8 (11a.).

Mill workers. Report on an Enquiry into the standard of living of Jute—in Bengal by Dr. A. C. Roy Chaudhury. Published 1930. Rs 2 (2a.).

Mines. Guzrati Translation of the Bye-laws for Coal —in pamphlet form As. 6 (1a.).

Rules framed by the Government of Bengal under section 30 of the Indian- Act, 1923 (IV of 1923), applicable to Coal –and—other than Coal—in pamphlet form, corrected up to 31st March 1931. As. 3 (1a.).

Motor Traffic. Report of the Committee appointed into matters connected with—on the Darjeeling Hill Cart Road, 1930 As. 7 (1a.).

Public Instruction. Supplement to the Report on—in Bengal, 1928 29. As. 12 (3a.).

Schedule of rates of the Eastern Circle, corrected up to 1st April 1930. Rs. 7 9 (5a.)

Statistics. Agricultural—of Bengal, 1929-30 Re. 1-2 (2a.).

Trade Unions. Report on the working of the Indian —Act (XIV of 1926), in Bengal for the year ending 31st March 1930. Re. 1-8 (1a.).

Veterinary. Annual Reports of the Civil—Department and Bengal—College, Calcutta, 1929-30. Re. 1-4 (2a.).

[24-9-1931]

Registered No. C207 *No. 39 of 1931*

The Calcutta Gazette

THURSDAY, SEPTEMBER 24, 1931.

CONTENTS:

	PAGE.
Finance Statements of Provincial and Central Co-operative Banks in the Presidency of Bengal for the quarter ending 30th June 1931	1205—1229
Annual Report of the Royal Botanic Gardens and the Gardens in Calcutta and of the Lloyd Botanic Garden, Darjeeling, for 1930-31	1230 1234
Report of the Honorary Committee for the management of the Zoological Garden, Calcutta, for the year 1930-31 ..	1235 1245
Statement under the Cotton Ginning and Pressing Factories Act, 1925 ..	1246
Corporation of Calcutta Notice ..	1246
Vital Statistics for the towns of Bengal for the week ending 12th September 1931	1247
Monthly Weather and Crop Report of Bengal for August 1931	1248
Weather and Crop Report for the week ending 16th September 1931 ..	1249—1252
Statement showing the daily gauge readings of certain rivers for the week ending 10th September 1931	1253- 1259
Statements of weekly gauge readings of certain rivers in Bengal	1260 1262

Supplement.

Official Papers.

DEPARTMENT OF CO-OPERATIVE SOCIETIES, BENGAL.

Finance Statements of Provincial and Central Co-operative Banks in the Presidency of Bengal for the quarter ending 30th June 1931.

NOTIFICATION.

No. 9559.—The 8th September 1931. The accompanying Finance Statements of Provincial and Central Co-operative Banks in the Presidency of Bengal for the quarter ending 30th June 1931 are published for general information.

S. K. GANGULY,

Registrar of Co-operative Societies, Bengal.

CENTRAL

Quarterly Finance

PART

Name of Bank.	Liabilities and Outside the movement.					
	Deposits fixed, current or Savings Bank, by members or by members in an individual capacity.	Debentures.	Overdrafts from outside Banks, *e.g.*, Presidency or Joint Stock.	Other items.	Fixed deposits or loans received from— Provincial Bank.	Fixed deposits or loans received from— Central Banks or Societies.
1	2	3	4	5	6 (*a*)	6 (*b*)
	Rs.	Rs.	Rs.	Rs.	Rs.	Rs.
I.—PROVINCIAL BANK.						
The Bengal Provincial Co-operative Bank, Ltd. ..	1,29,77,808	....	16,20,210	1,345	....	15,72,615
II.—CENTRAL BANKS.						
CALCUTTA.						
Central Co-operative Anti-Malaria Society, Ltd. ..	....	....	....	....	....	....
Co-operative Milk Societies Union, Ltd. ..	69,915	....	....	....	....	1,000
DISTRICT 24-PARGANAS.						
Taki Central Co-operative Bank, Ltd.	3,47,285	....	....	4,012	....	2,070
Nimta Central Co-operative Bank, Ltd. ..	21,885	....	....	....	....	3,067
Diamond Harbour Central Co-operative Bank, Ltd.	17,586	....	....	....	19,790	....
Barasat Central Co-operative Bank, Ltd. ..	1,57,718	....	....	....	....	....
Gosava Central Co-operative Bank, Ltd. ..	42,361	....	....	....	....	....
DISTRICT NADIA.						
Nadia Central Co-operative Bank, Ltd. ..	5,81,263	....	....	....	....	4,875
Kushtia Central Co-operative Bank, Ltd. ..	2,23,360	24,082	....	....	1,68,400	46,349
Meherpur Central Co-operative Bank, Ltd. ..	1,67,847	....	....	....	10,000	9,921
Nadia District Co-operative Industrial Union, Ltd.	....	....	....	....	....	10,528
Ranaghat Central Co-operative Bank, Ltd. ..	2,14,201	....	....	800	....	873
Chuadanga Central Co-operative Bank, Ltd. ..	1,82,287	....	....	1,085	21,500	6,173
DISTRICT JESSORE.						
Jessore Central Co-operative Bank, Ltd. ..	4,19,404	....	....	3,038	....	3,790
Magura Central Co-operative Bank, Ltd. ..	5,13,784	....	....	....	....	....
Narail Central Co-operative Bank, Ltd. ..	3,17,832	....	....	1,591	15,000	302
Jhenaidah Central Co-operative Bank, Ltd. ..	12,045	....	....	676	2,500	10,669
DISTRICT KHULNA.						
Khulna Central Co-operative Bank, Ltd. ..	4,43,101	....	....	3,237	....	5,799
Bagerhat Central Co-operative Bank, Ltd. ..	1,94,556	....	....	1,001	45,000	20
Baruli Central Co-operative Bank, Ltd. ..	1,63,919	....	....	3,225	8,000	7,209
DISTRICT MURSHIDABAD.						
Jangipur Central Co-operative Bank, Ltd. ..	1,94,179	....	....	....	....	....
Berhampur Central Co-operative Bank, Ltd. ..	6,18,572	....	....	8,784	....	3,507
Lalbagh Central Co-operative Bank, Ltd. ..	2,64,347	....	....	....	8,850	....
Kandi Central Co-operative Bank, Ltd. ..	54,373	....	....	....	1,02,834	22,972
DISTRICT HOWRAH.						
Howrah Central Co-operative Bank, Ltd. ..	....	....	....	....	....	....
Uluberia Central Co-operative Bank, Ltd. ..	17,809	....	....	....	....	4,300
DISTRICT HOOGHLY.						
Hooghly Central Co-operative Bank, Ltd. ..	5,23,891	....	....	....	903	25,685
Arambagh Central Co-operative Bank, Ltd. ..	....	....	....	....	20,000	36,028

BANKS.

Statement.

I.

Liabilities and quasi-liabilities.							Assets and quasi-assets.	
Within the movement.							Outside the movement.	
Drawn portion of cash credit with Provincial Bank.	Savings Bank or current accounts held in favour of Societies or Central Banks.	Reserve fund of Bank itself.	Paid-up share capital.	Other items.	Undrawn liabilities, e.g., cash credit accounts guaranteed by the Provincial Banks to Central Banks or to Societies and by Central Banks to other Central Banks or Societies.		Cash in hand and in outside Banks.	Government paper.
					To cover deposits.	For loans transactions.		
7	8	9	10	11	12	13	14	15
Rs.	Rs.	Rs.	Rs.	Rs.	Rs.	Rs.	Rs.	Rs.
....	14,98,455	2,79,070	16,45,300	9,84,178	....	4,45,234	14,142	70,80,244
....	....	11,368	2,245	....	....	....	114	....
....	22,062	57,000	14,290	....	....	....	7,894	100
....	1,412	27,064	77,100	8,845	....	....	6,276	12,153
....	....	2,388	2,890	....	....	....	181	....
....	30	3,902	15,165	7,210	....	....	214	....
....	....	7,115	20,025	....	....	....	5,398	....
....	....	1,477	4,675	....	....	....	63	....
....	....	17,541	45,260	17,011	....	....	11,639	14,684
....	....	19,300	59,400	2,610	....	....	11,210	....
....	....	11,000	37,467	19,963	....	....	2,612	....
....	....	167	1,775	100	....	....	35	....
....	44	6,156	30,080	6,788	....	....	74	6,525
7,245	6,999	6,255	23,965	11,800	....	....	8,140	....
....	....	35,600	68,925	17,381	....	....	216	....
....	....	15,500	59,455	5,496	....	....	19,229	....
....	144	12,670	45,490	5,180	....	....	3,021	....
....	100	....	2,805	....	....	....	50	....
....	3,851	16,600	63,705	30,663	9,794	....	3,254	....
....	534	9,525	42,465	22,051	....	1,000	6,235	....
....	559	13,450	31,600	46,784	....	....	44	4,000
....	137	12,778	35,615	5,854	....	....	7,353	1,836
....	....	22,000	52,380	37,903	....	....	1,618	7,760
....	....	10,200	33,306	2,285	....	....	2,374	....
....	....	3,880	22,355	6,196	....	....	4,342	....
....	376	878	4,510	2,623	....	....	2,090	....
....	....	862	4,500	163	....	....	1,437	....
....	....	6,945	56,370	....	....	....	4,140	856
....	....	....	7,790	500	....	....	628	....

CENTRAL

Quarterly Finance

PART

Name of Bank.	Assets and					
	Outside the movement.					
	Post Office Savings Bank deposits.	Other investments of a liquid nature in outside concerns.	Undrawn balance of assured cash credit.		Loans to Agricultural Societies.	Loans to non-Agricultural Societies.
			With Presidency or Joint Stock Bank.	With Provincial Bank.		
	16	17	18	19	20	21
	Rs.	Rs.	Rs.	Rs.	Rs.	Rs.
I.—PROVINCIAL BANK.						
The Bengal Provincial Co-operative Bank, Ltd. ..	....	....	23,41,790	....	25,50,510	10,25,530
II.—CENTRAL BANKS.						
Calcutta.						
Central Co-operative Anti-Malaria Society, Ltd. ..	....	10,245	....	....	....	....
Co-operative Milk Societies Union, Ltd. ..	....	....	....	3,000	....	11,934
District 24-Parganas.						
Taki Central Co-operative Bank, Ltd.	976	1,761	....	....	4,15,113	26,710
Nimta Central Co-operative Bank, Ltd. ..	3	....	....	....	19,039	480
Diamond Harbour Central Co-operative Bank, Ltd.	....	....	....	....	53,768	2,300
Barasat Central Co-operative Bank, Ltd. ..	28	4,635	....	....	1,61,756	3,387
Gosava Central Co-operative Bank, Ltd. ..	....	....	....	....	10,620	40,981
District Nadia.						
Nadia Central Co-operative Bank, Ltd. ..	....	....	....	....	4,20,695	10,028
Kushtia Central Co-operative Bank, Ltd. ..	58	....	....	....	4,68,074	53
Meherpur Central Co-operative Bank, Ltd. ..	10,000	....	....	....	2,16,760	8,590
Nadia District Co-operative Industrial Union, Ltd.	....	....	....	....	....	1,549
Ranaghat Central Co-operative Bank, Ltd. ..	8,564	3,520	....	....	1,94,878	....
Chuadanga Central Co-operative Bank, Ltd. ..	5	....	....	2,755	1,77,842	4,303
District Jessore.						
Jessore Central Co-operative Bank, Ltd. ..	116	55,300	....	....	4,11,625	1,767
Magura Central Co-operative Bank, Ltd. ..	9,999	....	....	50,000	4,57,331	1,950
Narail Central Co-operative Bank, Ltd. ..	4,781	....	....	....	3,42,046	....
Jhenaidah Central Co-operative Bank, Ltd. ..	100	....	....	....	16,619	....
District Khulna.						
Khulna Central Co-operative Bank, Ltd. ..	9,702	....	....	....	3,47,455	20,162
Bagerhat Central Co-operative Bank, Ltd. ..	14,818	....	....	....	2,43,258	7,409
Raruli Central Co-operative Bank, Ltd. ..	7,403	....	....	20,000	2,15,984	11,848
District Murshidabad.						
Jangipur Central Co-operative Bank, Ltd. ..	8,999	....	....	....	1,76,985	8,095
Berhampur Central Co-operative Bank, Ltd. ..	13,008	....	....	7,000	3,32,521	3,166
Lalbagh Central Co-operative Bank, Ltd. ..	3,450	....	....	....	2,41,099	5,008
Kandi Central Co-operative Bank, Ltd. ..	1,319	....	....	....	1,64,027	6,500
District Howrah.						
Howrah Central Co-operative Bank, Ltd. ..	....	....	....	....	5,105	....
Uluberia Central Co-operative Bank, Ltd. ..	....	....	....	....	23,992	574
District Hooghly.						
Hooghly Central Co-operative Bank, Ltd. ..	707	....	....	....	3,61,216	2,000
Arambagh Central Co-operative Bank, Ltd. ..	92	....	....	....	62,350	....

BANKS.

Statement.

1—*continued.*

quasi-assets.

Within the movement.					Net profit of past year.	Rates of interest on which money is usually—		Last dividend declared.
Loans or deposits due to the Central Bank by the Provincial Bank or other Central Banks.	Loans and deposits due to Provincial Bank by Central Banks.	Unpaid share capital.	Guaranteed share capital.	Other investments inside the Movement		Borrowed.	Lent.	
22	23	24	25	26	27	28	29	30
Rs.	Rs.	Rs.	Rs.	Rs.	Rs.	Per cent.	Per cent.	Per cent.
....	1,00,31,013	16,45,300	....	....	2,06,880	1 to 7	7½	6½
73,500	....	....	....	7,000	....	....	...	...
....	....	....	...	47,578	20,172	2½ to 7½	12½	....
5,098	....	....	....	18,750	10,030	2 to 8	12	4
5,542	....	2,890	....	6,842	730	4 to 7	10½	6½
92	....	16,130	....	11,900	4,523	4 to 7½	10½	6½
....	....	23,025	....	....	7,232	4 to 7½	10½	6½
....	....	1,675	....	275	881	4½ to 6½	7½ to 9½	9½
1,17,436	....	68,090	....	....	5,190	4 to 6½	7½ to 10½	6½
....	....	59,100	....	....	15,413	4 to 8	12½	....
1,622	....	55,508	....	....	5,780	4 to 7½	9½ to 10½	7½
307	....	2,936	....	785	....	4½ to 7½	10½	....
....	....	30,080	....	3,100	5,634	4 to 7	9½ to 12½	6½
391	....	23,975	....	10,949	5,810	7 to 8½	9½ to 12½	10
32,331	....	68,925	....	1,790	13,664	4 to 6½	9½ to 11½	7½
22,417	....	1,320	....	250	17,860	4 to 8	9½ to 12½	6½
....	....	18,010	....	20,153	9,875	3½ to 8	9½ to 15½	8
10,069	....	5,445	...	280	....	4½ to 8	9½ to 11½	...
1,41,713	....	11,355	....	33,272	13,156	3 to 6	8 to 10½	7½
1,328	....	55,985	....	21,708	5,970	7 to 8	9 to 10½	6½
6,862	....	....	....	22,801	4,297	3½ to 8	10½	5
12,876	....	42,245	....	75	5,049	3½ to 7	9½ to 10½	5
3,30,327	....	63,320	....	4,034	11,158	3½ to 6	9½ to 10½	6½
....	....	31,934	....	....	5,886	3½ to 7½	9½ to 12½	6½
12,857	....	25,485	....	11,960	4,445	3½ to 8	9½ to 12½	7
....	....	22,040	....	....	113	....	9½	...
193	....	4,500	....	....	659	7	9½	....
93,210	....	59,735	...	1,03,205	7,688	6½	9½	6½
....	....	45	....	....	153	7	9½	227

PART

Name of Bank.	Liabilities and Outside the movement.					
	Deposits, fixed, current or Savings Bank, by non-members or by members in an individual capacity.	Debentures.	Overdrafts from outside Banks, e.g., Presidency or Joint Stock.	Other items.	Fixed deposits or loans received from— Provincial Bank.	Central Banks or Societies.
1	2	3	4	5	6(a)	6(b)
	Rs.	Rs.	Rs.	Rs.	Rs.	Rs.
II.—CENTRAL BANKS—*contd.*						
DISTRICT BANKURA.						
Bankura Central Co-operative Bank, Ltd. ..	2,27,519	....	....	....	....	....
Bankura District Co-operative Industrial Union, Ltd.	29,445	....	....	14,044	5,000	....
Bishnupur Central Co-operative Bank, Ltd. ..	15,507	....	....	....	1,800	..
DISTRICT BIRBHUM.						
Rampurhat Central Co-operative Bank, Ltd. ..	4,39,133	....	....	2,322	....	100
Birbhum Central Co-operative Bank, Ltd. ..	3,90,921	....	....	1,828	....	....
Viswabharati Central Co-operative Bank, Ltd. ..	80,704	....	....	....	1,00,000	63,000
Nalhati Central Co-operative Bank, Ltd. ..	80,719	....	....	....	50,000	2,07,000
DISTRICT MIDNAPORE.						
Midnapore Central Co-operative Bank, Ltd. ..	4,74,891	....	....	66,992	....	15,097
Khelar-Bolorampur Central Co-operative Bank, Ltd.	1,23,427	....	....	156	54,000	1,635
Belabera Central Co-operative Bank, Ltd. ..	75,108	....	....	190	39,998	....
Tamluk Central Co-operative Bank, Ltd. ..	4,45,149	....	....	....	....	95
Mugberia Central Co-operative Bank, Ltd. ..	44,581	....	....	....	50,000	53,323
Belagoria Central Co-operative Bank, Ltd. ..	60,161	....	....	....	15,720	58,579
Ghatal Central Co-operative Bank, Ltd. ..	47,066	....	....	....	93,600	....
DISTRICT BURDWAN.						
Kalna Central Co-operative Bank, Ltd. ..	3,06,541	....	....	....	....	5,248
Burdwan Central Co-operative Bank, Ltd. ..	19,32,577	....	....	....	....	....
Katwa Central Co-operative Bank, Ltd. ..	8,047	....	....	....	46,500	80,189
Asansol Central Co-operative Bank, Ltd. ..	40,691	....	....	....	....	....
DISTRICT DACCA.						
Dacca Central Co-operative Bank, Ltd. ..	8,79,891	....	....	....	....	....
Narayanganj Central Co-operative Bank, Ltd. ..	2,47,960	....	....	2,180	4,70,000	20,000
Manikganj Central Co-operative Bank, Ltd. ..	2,56,221	....	....	....	70,000	....
Bikrampur Central Co-operative Bank, Ltd. ..	99,160	....	....	1,106	1,20,000	....
Dacca Co-operative Industrial Union, Ltd. ..	68,409	....	....	....	4,21,942	....
Raipura Central Co-operative Bank, Ltd. ..	1,89,295	....	....	....	6,77,800	....
Tangi Central Co-operative Bank, Ltd. ..	1,02,341	....	....	....	1,24,000	....
Baira Central Co-operative Bank, Ltd. ..	18,697	....	....	....	1,10,000	7,500
Ichhapura Central Co-operative Bank, Ltd ..	21,561	....	....	10	61,400	17,500
Dacca Co-operative Milk Societies Union, Ltd. ..	1,238	....	....	5,000	10,700	5,000
Kaliganj Central Co-operative Bank, Ltd. ..	39,609	....	....	....	80,000	....
DISTRICT MYMENSINGH.						
Mymensingh Central Co-operative Bank, Ltd. ..	20,48,274	....	....	....	1,50,000	65,210
Jamalpur Central Co-operative Bank, Ltd. ..	2,94,451	....	43,256	....	2,44,000	75,542
Tangail Central Co-operative Bank, Ltd. ..	3,90,883	....	....	....	3,25,000	48,078
Kishoreganj Central Co-operative Bank, Ltd. ..	2,60,574	....	....	....	1,60,000	9,401
Netrokona Central Co-operative Bank, Ltd. ..	57,062	....	....	730	2,99,700	7,700
Pingna Central Co-operative Bank, Ltd. ..	72,500	....	....	932	1,96,100	25,000
Madarganj Central Co-operative Bank, Ltd. ..	14,787	....	26,293	450	1,34,000	7,000
Dhanbari Central Co-operative Bank, Ltd. ..	8,594	....	....	....	1,67,000	24,000
Sarisabari Central Co-operative Bank, Ltd. ..	25,157	....	....	....	1,20,332	2,050
Gaffargaon Central Co-operative Bank, Ltd. ..	14,336	....	....	145	1,48,000	....
Bhairab Central Co-operative Bank, Ltd. ..	2,127	....	....	5	....	....
DISTRICT FARIDPUR.						
Faridpur Central Co-operative Bank, Ltd. ..	4,57,615	....	....	4,883	5,000	....
Madaripur Central Co-operative Bank, Ltd. ..	3,40,608	....	....	6,337	5,36,300	....
Gopalganj Central Co-operative Bank, Ltd. ..	2,97,054	....	....	2,578	....	....
Goalundo Central Co-operative Bank, Ltd. ..	2,30,891	....	....	5,950	....	....

I—*continued.*

quasi-liabilities.							Assets and quasi-assets.	
Within the movement.							Outside the movement.	
Drawn portion of cash credit with Provincial Bank.	Savings Bank or current accounts held in favour of Societies or Central Banks.	Reserve fund of Bank itself.	Paid-up share capital.	Other items	Undrawn liabilities, e.g., cash credit accounts guaranteed by the Provincial Banks to Central Banks or to Societies and by Central Banks to other Central Banks or Societies.		Cash in hand and in outside Banks.	Government paper.
					To cover deposits.	For loans transactions.		
7	8	9	10	11	12	13	14	15
Rs.	Rs.	Rs.	Rs.	Rs.	Rs.	Rs.	Rs.	Rs.
....	....	7,065	65,255	....	....	....	25,022	....
6,000	....	6,835	15,996	3,724	....	....	999	....
....	...	770	4,325	510	....	....	4	....
....	....	23,477	35,070	21,258	....	591	4,225	....
....	723	10,391	56,455	11,754	....	3,498	5,444	10,000
....	....	1,600	43,935	....	....	....	2,766	....
....	....	2,200	51,385	3,625	....	....	11,834	....
....	1,481	33,100	1,07,420	11,766	....	....	7,402	5,415
....	....	10,325	38,750	11,514	....	....	19,142	....
....	....	8,840	24,300	10,287	....	....	....	3,010
....	3,981	16,100	59,180	17,500	....	....	25,771	....
....	....	9,506	35,240	3,752	....	....	4,105	....
....	222	1,165	20,930	704	....	....	1,107	....
....	....	300	22,000	231	....	....	3,107	....
....	1,443	6,211	43,410	6,477	....	1,000	4,642	....
....	....	19,003	1,22,685	60	....	....	91,382	72,420
....	....	1,290	20,150	530	....	....	5,835	....
....	....	168	8,160	....	....	....	4,116	....
....	184	80,000	1,35,860	67,792	....	....	23,342	38,630
....	581	13,510	80,390	19,013	....	....	7,669	....
....	336	10,901	48,632	10,576	....	....	11,447	....
....	....	20,003	45,540	35,220	....	....	1,162	....
24,698	....	5,244	1,10,587	....	....	....	33,314	4,000
....	124	9,610	86,100	16,905	....	....	13,268	....
....	....	4,200	22,650	....	....	....	5,608	....
....	....	1,370	17,975	1,100	....	....	998	....
....	158	725	12,475	....	....	....	41	....
....	1,307	700	5,191	....	....	....	756	....
....	....	170	11,480	....	....	....	607	....
30,167	12,837	1,28,050	2,81,450	1,70,220	....	....	31,199	....
3,028	1,202	45,238	83,505	1,06,652	....	4,000	11,654	29,053
....	....	30,460	1,12,545	59,747	....	....	3,933	....
....	434	25,250	51,635	28,142	....	....	5,674	....
....	848	9,018	39,328	15,281	....	....	1,719	....
....	13	6,063	37,045	13,347	....	....	70	....
....	68	4,301	24,125	39,721	....	....	1,691	29,200
....	1,005	4,097	26,520	2,929	....	....	209	....
....	2,118	1,810	15,180	3,553	....	....	1,183	....
....	....	475	19,600	....	....	....	114	....
....	24	....	800	171	....	....	60	....
27,519	1,285	61,500	63,860	64,704	....	....	705	18,500
20,000	2,995	638	91,670	10,911	....	....	3,730	37,297
....	527	25,104	51,985	29,265	....	....	89,507	....
....	199	24,067	52,825	17,733	....	....	3,327	7,500

PART

Name of Bank.	Assets and Outside the movement.					
	Post Office Savings Bank deposits.	Other investments of a liquid nature in outside concerns.	Undrawn balance of assured cash credit.		Loans to Agricultural Societies.	Loans to non-Agricultural Societies.
			With Presidency or Joint Stock Bank.	With Provincial Bank.		
	16	17	18	19	20	21
II.—CENTRAL BANKS—*contd.*	Rs.	Rs.	Rs.	Rs.	Rs.	Rs.
District Bankura.						
Bankura Central Co-operative Bank, Ltd. ..	1,656	....	....	5,000	2,40,571	11,703
Bankura District Co-operative Industrial Union, Ltd.	....	15,282	....	....	3,240	14,342
Bishnupur Central Co-operative Bank, Ltd. ..	207	....	....	....	21,267	....
District Birbhum.						
Rampurhat Central Co-operative Bank, Ltd. ..	459	....	....	8,000	1,87,379	9,210
Birbhum Central Co-operative Bank, Ltd. ..	11,168	7,750	....	5,000	6,06,246	4,266
Viswabharati Central Co-operative Bank, Ltd. ..	548	....	....	....	2,22,004	2,289
Nalhati Central Co-operative Bank, Ltd. ..	10,038	....	....	....	3,46,747	4,703
District Midnapore.						
Midnapore Central Co-operative Bank, Ltd. ..	332	....	....	....	4,55,770	18,714
Khelar Bolorampur Central Co-operative Bank, Ltd.	10,000	....	....	....	2,11,052	....
Belobera Central Co-operative Bank, Ltd. ..	....	....	....	....	1,51,624	....
Tamluk Central Co-operative Bank, Ltd. ..	872	380	....	....	3,73,426	3,960
Mugberia Central Co-operative Bank, Ltd. ..	711	....	....	....	1,76,218	....
Balagoria Central Co-operative Bank, Ltd. ..	....	....	....	....	1,38,732	3,500
Ghatal Central Co-operative Bank, Ltd. ..	1,370	....	....	....	1,48,037	8,000
District Burdwan.						
Kalna Central Co-operative Bank, Ltd. ..	7,664	....	....	6,000	2,94,772	....
Burdwan Central Co-operative Bank, Ltd. ..	9,893	5,711	....	....	8,32,000	....
Katwa Central Co-operative Bank, Ltd. ..	1	250	....	....	1,46,582	1,230
Asansol Central Co-operative Bank, Ltd. ..	....	....	....	....	43,113	....
District Dacca.						
Dacca Central Co-operative Bank, Ltd. ..	20,842	50	50,000	....	8,75,584	9,262
Narayanganj Central Co-operative Bank, Ltd. ..	....	18,389	....	....	7,01,998	1,000
Manikganj Central Co-operative Bank, Ltd. ..	....	6,750	....	....	3,50,362	....
Bikrampur Central Co-operative Bank, Ltd. ..	....	....	....	....	2,61,806	9,906
Dacca Co-operative Industrial Union, Ltd. ..	....	....	....	....	....	1,27,166
Raipura Central Co-operative Bank, Ltd. ..	13,126	....	....	....	8,22,320	4,950
Tangi Central Co-operative Bank, Ltd. ..	....	537	....	....	2,06,438	....
Baira Central Co-operative Bank, Ltd. ..	....	....	....	....	1,37,374	....
Ichhapur Central Co-operative Bank, Ltd. ..	1,758	....	....	....	97,587	10,854
Dacca Co-operative Milk Societies Union, Ltd ..	100	....	....	....	26,334	....
Kaliganj Central Co-operative Bank, Ltd. ..	....	....	....	....	1,13,444	....
District Mymensingh.						
Mymensingh Central Co-operative Bank, Ltd. ..	14,610	33,110	50,784	19,853	21,41,910	1,55,267
Jamalpur Central Co-operative Bank, Ltd. ..	530	....	....	6,972	7,12,231	12,547
Tangail Central Co-operative Bank, Ltd ..	....	....	....	....	8,93,660	....
Kishoreganj Central Co-operative Bank, Ltd. ..	1,405	8,541	....	....	4,11,493	4,859
Netrokona Central Co-operative Bank, Ltd. ..	....	490	....	....	2,82,092	36,260
Pingna Central Co-operative Bank, Ltd. ..	5	....	....	....	3,26,738	....
Madarganj Central Co-operative Bank, Ltd. ..	....	....	....	....	1,83,921	604
Dhanbari Central Co-operative Bank, Ltd. ..	300	....	....	....	2,13,896	2,550
Sarisabari Central Co-operative Bank, Ltd. ..	....	45	....	....	1,44,558	....
Gaffargaon Central Co-operative Bank, Ltd. ..	....	....	....	....	1,55,041	....
Bhairab Central Co-operative Bank, Ltd. ..	....	....	....	....	2,500	....
District Faridpur.						
Faridpur Central Co-operative Bank, Ltd. ..	367	....	....	10,181	5,87,774	8,555
Madaripur Central Co-operative Bank, Ltd. ..	461	....	....	....	8,01,613	4,621
Gopalganj Central Co-operative Bank, Ltd. ..	5,294	....	....	....	2,95,992	4,150
Goalundo Central Co-operative Bank, Ltd. ..	2,700	4,430	....	....	3,47,396	....

I—*continued.*

quasi-assets.

Within the movement.								
Loans or deposits due to the Central Bank by the Provincial Bank or other Central Banks.	Loans and deposits due to Provincial Bank by Central Banks.	Uncalled share capital.	Guaranteed share capital	Other investments inside the movement.	Net profit of past year.	Rates of interest on which money is usually—		Last dividend declared.
						Borrowed.	Lent.	
22	23	24	25	26	27	28	29	30
Rs.	Rs.	Rs.	Rs.	Rs.	Rs.	Per cent.	Per cent.	Per cent.
8,377	....	69,795	....	6,000	3,746	6½	9½	5
....	....	7,353	....	42,179	1,218	6½	9½	....
1,373	....	12,726	....	750	375	7	9½	6½
2,64,000	....	61,930	....	11,300	7,295	7	9½	....
95,750	....	16,530	....	19,376	9,502	6	9½	....
34,209	....	7,215	....	....	4,890	7	9½	....
1,949	....	51,390	....	10,750	5,112	7	9½	6
2,40,702	....	1,61,130	....	47,850	18,331	6	9½	9½
....	....	....	....	8,700	5,142	7	9	9½
109	....	....	....	8,000	4,021	7	9½	....
1,14,509	....	67,820	....	487	13,196	6½	9½	....
....	....	....	....	....	3,037	7	9½	3½
155	....	....	....	11,700	481	7½	9..	5
....	....	22,000	....	110	1,709	6	9½	522
54,985	....	....	....	10,427	5,018	7	9½	4
2,78,812	....	3,090	....	8,56,833	22,612	6	9½	7
....	....	20,150	....	4,000	1,749	7	9½	....
....	....	2,550	....	2,000	427	7	9½	3
82,405	....	....	....	7,725	32,189	3½ to 7½	3 to 12	On pref. 11½ On ord. 10
1,161	....	92,510	....	62,411	8,432	3½ to 9	10 to 10 1/16	5
1,198	....	58,488	....	8,500	7,523	3½ to 8	10 1/16	8½, 9½
108	....	....	....	14,300	13,590	3½ to 8½	10½ to 12½	....
....	....	4,433	....	4,61,503	28,683	7 to 8	9½ to 12½	....
3,111	....	86,100	....	76,376	10,187	3½ to 9	10 to 10 1/16	6½
....	....	22,050	....	2,200	6,766	6 to 9	12½	....
450	....	17,975	....	12,975	1,638	3 to 9	10½ to 12	6
77	....	12,475	....	7,750	1,773	7½ to 8½	12	....
153	....	5,194	....	....	256	7½ to 8½	12½	....
103	....	11,480	....	8,090	169	7 to 9	12	....
								....
1,54,000	....	22,400	....	17,000	51,199	2 to 7	7½ to 10 1/16	12
4 219	....	....	....	307	17,238	6½ to 8	11½ to 12½	12½
....	....	1,13,550	....	52,750	22,260	3½ to 8	9½ to 10 1/16	12½
606	....	65,675	.. .	37,677	14,052	3 to 8	10½ to 10 1/16	12½
948	....	30,328	.. .	66,372	5,597	4½ to 9	10 to 11½	6½
....	....	....	....	21,533	5,696	3½ to 8	10 1/16	8
1,530	....	24,125	....	11,188	3,799	3½ to 9	9½ to 12	7
357	....	....	....	17,056	3,617	8 to 9	10 1/16	...
1,972	....	15,180	....	13,689	3,267	6½ to 9	11½	6½
....	....	19,000	....	14,800	4,114	1 to 9	10 to 10 1/16	....
....	....	5,650	....	....	....	7 to 9	10 1/16	....
1,043	....	63,860	....	1,398	16,364	3 to 8	10 to 12	9
....	....	91,670	....	61,313	14,087	3½ to 7½	12½ to 14 1/16	....
8,269	....	56,040	....	27,950	7,470	3½ to 8	9½ to 12½	6½
240	....	52,825	....	25,022	4,097	2 to 7½	10½	6½

PART

Name of Bank.	Liabilities and — Outside the movement.					
	Deposits, fixed, current or Savings Bank, by non-members or by members in an individual capacity.	Debentures.	Overdrafts from outside Banks, e.g., Presidency or Joint-Stock.	Other items.	Fixed deposits or loans received from— Provincial Bank.	Central Banks or Societies.
1	2	3	4	5	6(a)	6(b)
	Rs.	Rs.	Rs.	Rs.	Rs.	Rs.
II.—CENTRAL BANKS—*contd.*						
District Bakarganj.						
Barisal Central Co-operative Bank, Ltd. ..	14,71,102	....	....	11,080	....	....
Patuakhali Central Co-operative Bank, Ltd. ..	83,433	....	....	....	4,700	1,17,176
Bhola Central Co-operative Bank, Ltd. ..	56,562	....	....	....	1,30,300	1,82,962
Khepupara Central Co-operative Bank, Ltd. ..	17,877	....	....	....	1,31,200	2,02,010
Mathbaria Central Co-operative Bank, Ltd. ..	22,965	....	....	....	72,000	1,17,039
Pirojpur Central Co-operative Bank, Ltd. ..	74,853	....	....	....	30,500	210
Barguna Central Co-operative Bank, Ltd. ..	Work not started.					
Amtali Central Co-operative Bank, Ltd. ..	Ditto.					
District Chittagong.						
Chittagong Central Co-operative Bank, Ltd. ..	3,01,896	....	....	....	....	92,795
Cox's Bazar Central Co-operative Bank, Ltd. ..	78,107	....	....	....	87,000	....
Chittagong Co-operative Industrial Union, Ltd. ..	....	....	....	....	4,18,000	....
Satkania Co-operative Industrial Union, Ltd ..	200	....	....	....	....	....
Chittagong Central Co-operative Milk Union, Ltd.	....	....	....	....	3,964	2,250
District Noakhali.						
Noakhali Central Co-operative Bank, Ltd. ..	2,30,433	....	....	1,929	1,06,100	33,210
Feni Central Co-operative Bank, Ltd.	3,68,987	....	....	....	....	3,790
Raipura Central Co-operative Bank, Ltd. ..	5,657	....	....	....	1,09,600	463
Lakshmipur Central Co-operative Bank, Ltd. ..	58,686	....	....	....	1,29,300	4,221
Hatiya Central Co-operative Bank, Ltd. ..	58,842	....	....	634	1,71,650	14,595
Sandwip Central Co-operative Bank, Ltd. ..	93,552	....	....	....	1,09,7.0	....
Chowmohani Industrial Union, Ltd. ..	9,533	....	....	....	66,700	....
Raipura Co-operative Industrial Union, Ltd. ..	1,403	....	....	....	19,130	40,168
District Tippera.						
Comilla Central Co-operative Bank, Ltd ..	8,77,708	....	....	10,537	9,87,000	8
Laksam Central Co-operative Bank, Ltd ..	3,777	....	....	....	11,800	1,75,107
Daudkandi-Gouripur Central Co-operative Bank, Ltd.	7,386	....	....	....	2,37,500	85,514
Tippera Raj Central Co-operative Bank, Ltd. ..	2,20,864	....	....	46,080	....	8,900
Brahmanbaria Central Co-operative Bank, Ltd. ..	3,21,634	....	....	....	3,65,000	....
Nabinagar Central Co-operative Bank, Ltd. ..	30,113	....	....	....	3,78,166	....
Chandpur Central Co-operative Bank, Ltd. ..	5,44,172	....	18,257	....	2,27,000	3,405
Matlab Central Co-operative Bank, Ltd. ..	38,190	....	....	....	3,83,800	45,519
District Rajshahi.						
Rajshahi Central Co-operative Bank, Ltd. ..	3,55,264	....	....	36,527	....	*6,549
Nator Central Co-operative Bank, Ltd. ..	1,42,149	....	....	....	22,000	....
Naogaon Central Co-operative Bank, Ltd. ..	3,64,232	....	....	....	....	46,345
Puthia Central Co-operative Bank, Ltd. ..	1,28,704	....	....	....	....	25,000
Naogaon Co-operative Industrial Union, Ltd. ..	475	....	....	....	30,000	....
Naogaon Co-operative Milk Union, Ltd. ..	....	....	....	4,500	....	2,900
District Pabna						
Pabna Central Co-operative Bank, Ltd. ..	6,56,503	....	20,000	8,974	38,000	2,959
Ullapara Central Co-operative Bank, Ltd. ..	1,50,660	....	....	....	90,000	715
Serajganj Central Co-operative Bank, Ltd. ..	3,43,986	....	....	....	1,28,000	25,786
Shahzadpur Central Co-operative Bank, Ltd. ..	1,55,540	....	....	....	1,79,500	....
Shahzadpur Co-operative Milk Union, Ltd. ..	568	....	....	4,500	....	3,585
Bhanguria Central Co-operative Bank, Ltd. .	8,309	....	....	1,903	73,100	10,485
District Dinajpur.						
Dinajpur Central Co-operative Bank, Ltd. ..	1,13,845	....	....	732	6,000	13,476
Balurghat Central Co-operative Bank, Ltd. ..	2,35,632	....	....	9,363	....	1,963
Thakurgaon Central Co-operative Bank, Ltd. ..	84,552	....	....	....	92,500	5,000
Dinajpur Co-operative Milk Union, Ltd. ..	1,303	....	....	....	....	4,000

I—*continued.*

Quasi-liabilities.							Assets and quasi-assets.	
Within the movement.							Outside the movement.	
Drawn portion of cash credit with Provincial Bank.	Savings Bank or current accounts held in favour of Societies or Central Banks.	Reserve fund of Bank itself.	Paid-up share capital.	Other items.	Undrawn liabilities, e.g., cash credit accounts guaranteed by the Provincial Banks to Central Banks or to Societies and by Central Banks to other Central Banks or Societies.		Cash in hand and in outside Banks.	Government paper.
					To cover deposits.	For loans transaction.		
7	8	9	10	11	12	13	14	15
Rs.	Rs.	Rs.	Rs.	Rs.	Rs.	Rs.	Rs.	Rs.
....	3,478	58,000	1,42,765	41,595	....	....	35,280	....
....	2,486	15,623	36,780	19,561	....	....	5,280	....
....	....	6,705	53,789	3,473	....	....	1,480	....
42	1,737	69,842	89,450	61,157	....	....	26,626	10,625
....	1,216	17,000	41,350	17,559	....	....	3,147	....
....	741	1,000	18,300	....	....	....	5,077	....
....	27,584	20,350	83,850	6,726	....	....	4,644	....
....	....	4,550	25,850	....	....	....	1,177	....
....	110	1,500	15,074	....	....	....	19,844	....
....	....	....	247	....	....	....	447	....
....	33	250	2,838	1,295	....	....	1,018	....
....	2,155	10,750	58,360	19,267	....	....	1,260	....
....	9,547	26,200	61,930	23,678	....	....	501	....
....	....	3,050	11,300	6,749	....	....	139	....
....	....	8,855	34,275	5,481	....	....	2,072	....
....	110	5,358	35,025	5,257	....	....	1,016	....
....	....	7,805	37,690	....	....	....	4,052	....
....	306	3,310	8,226	....	....	....	435	....
....	....	....	5,396	....	....	....	4	....
....	1,465	68,101	1,24,060	20,092	....	....	68,926	12,530
....	....	344	38,740	4,789	....	....	20	....
....	....	4,306	38,065	3,524	....	....	2,603	....
....	1,233	10,000	39,570	....	....	....	6,793	....
....	....	27,110	75,525	21,222	....	....	141	6,926
....	....	3,479	45,725	6,077	....	....	570	....
....	3,168	47,200	1,24,125	39,031	....	....	144	....
....	1,146	6,700	57,475	4,122	....	....	32	....
15,000	28,965	13,480	54,952	24,023	....	10,000	5,053	1,496
....	....	6,202	31,040	4,655	....	....	1,682	....
....	....	13,106	50,590	16,045	....	....	4,176	....
10,000	....	3,951	20,375	5,182	....	256	15,156	....
14,000	....	1,070	5,988	....	....	....	170	....
....	....	60	1,042	100	....	276	27	....
66,000	19,363	82,222	1,07,730	96,819	....	....	11,666	1,57,100
9,027	....	13,422	40,520	23,742	....	....	218	....
28,023	14,505	22,223	79,770	49,995	....	....	509	....
2,010	....	7,285	40,900	18,703	....	1,173	5,677	....
....	....	28	828	1,201	....	....	....	....
....	2,437	619	9,230	2,060	....	....	393	....
....	1,431	2,820	14,180	....	....	....	601	....
....	1	13,444	33,030	4,370	....	....	14,715	....
....	....	3,541	20,300	....	....	....	1,461	....
....	....	....	240	393	....	....	12	....

PART

Name of Bank.	Assets and Outside the movement.					
	Post Office Savings Bank deposits.	Other investments of a liquid nature in outside concerns.	Undrawn balance of assured cash credit.		Loans to Agricultural Societies.	Loans to non-Agricultural Societies.
			With Presidency or Joint Stock Bank.	With Provincial Bank.		
	16	17	18	19	20	21
	Rs.	Rs.	Rs.	Rs.	Rs.	Rs.
II.—CENTRAL BANKS.—*contd.*						
District Bakarganj.						
Barisal Central Co-operative Bank, Ltd. ..	10,997	1,446	....	40,000	7,45,409	13,573
Patuakhali Central Co-operative Bank, Ltd. ..	....	....	....	....	2,58,450	....
Bhola Central Co-operative Bank, Ltd. ..	21	....	....	....	3,69,139	32,844
Khepupara Central Co-operative Bank, Ltd. ..	111	....	....	2,958	5,35,569	....
Mathbaria Central Co-operative Bank, Ltd. ..	....	....	....	....	2,60,679	5,932
Pirojpur Central Co-operative Bank, Ltd. ..	97	....	....	....	1,06,966	6,304
Borguna Central Co-operative Bank, Ltd. ..	Work not started.					
Amtali Central Co-operative Bank, Ltd. ..	Ditto.					
District Chittagong.						
Chittagong Central Co-operative Bank, Ltd. ..	5,695	....	....	....	4,37,939	50,951
Cox's Bazar Central Co-operative Bank, Ltd. ..	10	....	....	....	1,57,098	16,500
Chittagong Co-operative Industrial Union, Ltd. ..	....	....	....	....	....	95,992
Satkania Co-operative Industrial Union, Ltd. ..	....	....	....	....	....	....
Chittagong Central Co-operative Milk Union, Ltd...	....	2,226	....	....	7,486	....
District Noakhali.						
Noakhali Central Co-operative Bank, Ltd. ..	4,508	....	....	....	3,89,788	33,854
Feni Central Co-operative Bank, Ltd.	11,097	....	....	....	4,32,731	3,398
Raipura Central Co-operative Bank, Ltd. ..	80	....	....	....	60,607	5,459
Lakshmipur Central Co-operative Bank, Ltd. ..	34	....	....	....	2,10,298	600
Hatiya Central Co-operative Bank, Ltd. ..	4,452	172	....	....	2,54,701	3,082
Sandwip Central Co-operative Bank, Ltd. ..	240	....	....	....	2,25,925	....
Chowmohani Co-operative Industrial Union, Ltd. ..	5	81	....	....	....	44,395
Raipura Co-operative Industrial Union, Ltd. ..	6	....	....	....	....	....
District Tippera.						
Comilla Central Co-operative Bank, Ltd. ..	4,090	265	....	....	8,52,613	....
Laksam Central Co-operative Bank, Ltd. ..	163	....	....	....	2,14,850	2,938
Daudkandi-Gouripur Central Co-operative Bank, Ltd.	2,530	....	....	....	3,35,185	4,500
Tippera Raj Central Co-operative Bank, Ltd. ..	....	....	15,000	2,376	2,79,241	1,565
Brahmanbaria Central Co-operative Bank, Ltd. ..	873	....	....	....	6,57,071	31,554
Nabinagar Central Co-operative Bank, Ltd. ..	529	....	....	....	3,89,671	600
Chandpur Central Co-operative Bank, Ltd. ..	91	....	31,743	....	7,68,431	22,301
Matlab Central Co-operative Bank, Ltd. ..	100	....	....	....	4,59,731	4,909
District Rajshahi.						
Rajshahi Central Co-operative Bank, Ltd. ..	25	....	....	20,000	....	....
Nator Central Co-operative Bank, Ltd. ..	2,658	....	....	....	1,73,046	....
Naogaon Central Co-operative Bank, Ltd. ..	....	....	43,500	....	4,12,727	1,227
Puthia Central Co-operative Bank, Ltd. ..	296	....	....	....	1,53,027	....
Naogaon Co-operative Industrial Union, Ltd. ..	....	....	....	....	....	29,817
Naogaon Co-operative Milk Union, Ltd. ..	....	....	21	....	....	3,852
District Pabna.						
Pabna Central Co-operative Bank, Ltd. ..	12	70	30,000	....	6,88,790	15,935
Ullapara Central Co-operative Bank, Ltd. ..	4,105	75	....	72	2,65,717	6,440
Serajganj Central Co-operative Bank, Ltd. ..	1,306	....	....	77	5,96,106	3,812
Shahzadpur Central Co-operative Bank, Ltd. ..	38	....	....	7,081	3,24,525	4,537
Shahzadpur Co-operative Milk Union, Ltd. ..	....	....	....	....	....	3,204
Bhanguria Central Co-operative Bank, Ltd. ..	1,810	....	....	....	87,859	....
District Dinajpur.						
Dinajpur Central Co-operative Bank, Ltd. ..	6,165	....	....	....	94,497	20,652
Balurghat Central Co-operative Bank, Ltd. ..	9,776	....	....	....	2,16,507	2,338
Thakurgaon Central Co-operative Bank, Ltd. ..	2,453	....	....	....	1,06,436	17,256
Dinajpur Co-operative Milk Union, Ltd. ..	....	2,820	....	....	....	1,600

I—*continued.*

quasi-assets.

Within the movement.								
Loans or deposits due to the Central Bank by the Provincial Bank or other Central Banks.	Loans and deposits due to Provincial Bank by Central Banks.	Uncalled share capital.	Guaranteed share capital.	Other investments inside the movement.	Net profit of past year.	Rates of Interest on which money is usually—		Last dividend declared.
						Borrowed.	Lent.	
22	23	24	25	26	27	28	29	30
Rs.	Rs.	Rs.	Rs.	Rs.	Rs.	Per cent.	Per cent.	Per cent.
8,71,048	....	1,54,035	....	30,616	24,805	2 to 7	2 to 10½	12½
....	....	59,170	....	7,200	7,419	6 to 8½	9 to 12½	....
71	....	55,761	....	....	7,220	8	9 to 10½	7
8,523	....	89,450	....	44,650	24,035	7 & 8	10½ & 12½	5
81	....	41,350	....	13,575	6,863	8	10½	6½
310	....	18,300	....	....	1,421	7 & 7½	10½	....
29,006	....	83,850	....	9,350	11,285	4 to 7½	9 to 10½	10½
....	....	25,850	....	15,650	2,434	7 to 8	9½ to 10½	3½
....	....	1,035	....	....	1,286	7 to 8	11½	....
....	....	220	....	....	....	....	....	....
....	....	1,037	....	....	994	6 to 8½	10½	....
3,292	....	77,630	....	....	9,618	4 to 8	9½ to 10⅝	7½
13,054	....	2,17,145	....	19,250	9,660	3½ to 8	10½	8
40,012	....	11,300	....	12,470	4,360	7½ to 8	10½	....
....	....	38,623	....	22,213	3,721	5 to 9	9½ to 10½	6½
149	....	....	..	23,676	4,048	3½ to 8½	9½ to 10½	6½
61	....	56,535	....	16,616	3,225	1 to 8½	9½ to 10½	6
....	....	8,324	....	13,453	436	7 to 8	10½	7
....	....	5,390	....	2,000	....	5½ to 8	....	....
3,15,046	....	1,24,060	....	11,762	25,372	2 to 6, 6½ to 8	10½	10
13,989	....	38,740	....	....	1,376	2 to 8	10½	....
1,275	....	39,135	....	24,375	5,522	4½ to 8	10½	....
29,525	....	43,825	....	....	7,265	2 to 7½	10½	12½
....	....	75,525	....	22,169	6,024	2 to 8	10½	7
....	....	45,725	....	....	4,924	6 to 8	9½ to 10½	5½
45,814	....	1,24,125	....	1,29,880	11,057	4 to 8	8½ to 10½	6½
71	....	57,475	....	10,163	3,458	4 to 7½	9⅜ to 10⅝	....
35,000	....	77,894	....	15,722	6,151	3 to 7½	9½ & 10½	4
5,200	....	31,040	....	2,300	....	5½ to 7½	10½	3½
....	....	59,590	....	33,318	146	3½ to 8½	10½, 9½, 12	....
....	....	....	....	4,693	2,033	5½ to 9	9½ & 12½	5
....	....	5,988	....	....	....	7 to 8	10½	....
....	....	204	....	100	61	7½ to 8½	....	....
93,423	....	1,07,730	....	20,500	....	3 to 7½	9½ & 10½	....
....	....	40,620	....	20,653	3,253	7½ & 8	9½ & 10½	6½
1,291	....	....	....	26,416	12,878	4 to 7½	9½ to 10½	4
9	....	40,000	....	30,807	1,827	4 to 8	10 to 10½	6½
91	....	....	....	5,797	527	8	10½	....
3,682	....	802	....	7,325	519	3½ to 8	10½	3½
766	....	....	....	5,600	1,712	6 to 8	9½ to 12½	....
25,000	....	33,030	....	12,550	1,189	3 to 8	9½, 10½	2½
....	....	....	....	....	3,652	4½ to 8½	9½ to 15	....
....	....	....	....	430	....	8 to 6	....	....

PART

Name of Bank.	Liabilities and Outside the movement.					
	Deposits, fixed, current or Savings Bank, by non-members or by members in an individual capacity.	Debentures.	Overdrafts from outside Banks, e.g., Presidency or Joint-Stock.	Other items.	Fixed deposits or loans received from— Provincial Bank.	Central Banks or Societies.
1	2	3	4	5	5(a)	6(b)
II.—CENTRAL BANKS—*concld.*	Rs.	Rs.	Rs.	Rs.	Rs.	Rs.
DISTRICT RANGPUR.						
Gaibandha Central Co-operative Bank, Ltd. ..	2,75,210	....	....	3,683	76,000	....
Kurigram Central Co-operative Bank, Ltd. ..	81,354	....	....	....	1,24,039	....
Nilphamari Central Co-operative Bank, Ltd. ..	1,08,206	....	....	1,852	73,000	....
Rangpur Central Co-operative Bank, Ltd. ..	3,60,003	....	....	2,105	....	....
DISTRICT BOGRA.						
Bogra Central Co-operative Bank, Ltd. ..	8,48,240	....	....	....	2,10,000	1,40,000
Khanjanpur Central Co-operative Bank, Ltd. ..	84,474	....	....	....	68,000	8,038
Padmapara Central Co-operative Bank, Ltd. ..	43,378	....	....	....	1,25,263	9,000
Nawababoga Central Co-operative Bank, Ltd. ..	68,641	....	....	....	44,000	12,000
Chandanbaisa Central Co-operative Bank, Ltd. ..	25	....	....	....	20,000	1,54,290
DISTRICT JALPAIGURI.						
Jalpaiguri Central Co-operative Bank, Ltd. ..	51,538	....	....	130	50,600	37,400
DISTRICT MALDA.						
Malda Central Co-operative Bank, Ltd. ..	20,553	....	....	2,204	8,000	7,425
Chanchal Raj Central Co-operative Bank, Ltd. ..	1,17,762	....	....	....	24,400	....
Nawabganj Central Co-operative Bank, Ltd. ..	24,262	....	....	....	....	46,000
Harishchandrapur Central Co-operative Bank, Ltd.	1,11,027	....	....	124	11,000	....
Bengal Co-operative Silk Union, Ltd. ..	45,125	....	....	1,760	....	....
DISTRICT DARJEELING.						
Darjeeling Central Co-operative Bank, Ltd. ..	1,708	....	....	....	37,488	....
Kalimpong Central Co-operative Bank, Ltd. ..	2,17,063	....	4,208	....	23,300	....
Pedong Central Co-operative Bank, Ltd. ..	33,080	....	....	....	24,650	....
Darjeeling Co-operative Milk Union, Ltd. ..	14,387	....	....	4,300	42,484	....
TOTAL OF CENTRAL BANKS	2,74,74,073	24,082	1,12,014	3,08,284	1,02,94,753	28,85,402
TOTAL OF PROVINCIAL AND CENTRAL BANKS	4,04,52,781	24,082	17,32,224	3,09,629	1,02,94,753	44,58,017
TOTAL OF PREVIOUS QUARTER ..	3,95,42,794	24,082	28,72,991	3,19,504	1,03,89,909	38,72,818

I—*concluded.*

quasi-liabilities.							Assets and quasi-assets.	
Within the movement.							Outside the movement.	
Drawn portion of cash credit with Provincial Bank.	Savings Bank or current accounts held in favour of Societies or Central Banks.	Reserve fund of Bank itself.	Paid-up share capital.	Other items.	Undrawn liabilities, *e.g.*, cash credit accounts guaranteed by the Provincial Banks to Central Banks or to Societies and by Central Banks to other Central Banks or Societies.		Cash in hand and in out side Banks.	Government paper.
					To cover deposits.	For loans transaction.		
7	8	9	10	11	12	13	14	15
Rs.	Rs.	Rs	Rs.	Rs.	Rs.	Rs.	Rs.	Rs.
27,086	1,270	20,000	40,100	71,270	....	....	21,477	32,000
....	....	9,559	33,715	14,008	....	....	2,790	....
....	33	8,467	27,200	16,081	....	791	4,884	3,000
37,702	....	15,500	46,300	26,073	....	12,928	5,558	....
24,000	2,965	39,397	1,28,310	34,594	....	500	23,591	....
6,997	3,320	2,071	25,190	7,943	....	....	806	....
....	570	7,986	23,980	13,230	....	....	379	....
....	....	....	14,275	....	....	....	23	....
....	3,688	....	20,575	621	....	....	3,081	....
....	4,456	2,439	20,540	5,768	....	....	10,775	....
14,953	6,333	12,670	41,730	6,138	....	....	1,160	7,582
....	....	3,238	16,099	5,585	....	....	1,465	....
....	....	1,598	10,420	25	....	....	805	....
10,768	....	2,727	19,210	7,738	....	....	2,613	....
....	4,694	1,825	21,555	2,920	....	....	7,524	....
4,990	464	3,270	12,220	1,270	....	....	141	....
9,960	....	16,384	33,550	23,276	....	....	2,283	....
40	....	11,313	14,140	5,785	....	....	1,362	....
....	55	374	5,115	....	....	....	2,863	....
4,02,063	2,14,740	17,82,330	55,69,813	18,83,289	9,794	36,013	8,72,534	5,35,007
4,02,063	17,13,195	20,61,400	72,15,113	28,67,467	9,794	4,81,247	8,86,676	76,15,251
3,27,979	18 94,071	20,13,061	66,78,151	44,97,418	1,500	6,01,545	8,74,481	80,47,214

PART

Name of Bank	Assets and Outside the movement.					
	Post Office Savings Bank deposits	Other investments of a liquid nature in outside concerns.	Undrawn balance of assured cash credit.		Loans to Agricultural Societies.	Loans to non-Agricultural Societies.
			With Presidency or Joint Stock Bank.	With Provincial Bank		
	16	17	18	19	20	21
II —CENTRAL BANKS—*concld.*	Rs.	Rs.	Rs.	Rs.	Rs.	Rs.
DISTRICT RANGPUR.						
Gaibandha Central Co-operative Bank, Ltd. ..	7,530	448	....	913	3,53,483	11,037
Kurigram Central Co operative Bank, Ltd.	200	....	....	..	2,24,077	2,706
Nilphamari Central Co-operative Bank, Ltd	2,811	517	....	....	1,80,322	2,209
Rangpur Central Co operative Bank, Ltd. ..	73	..	...	2,208	3,59,437	6,656
DISTRICT BOGRA.						
Bogra Central Co operative Bank, Ltd ..	14,580	...	..	.	9,67,320	....
Khanjanpur Central Co operative Bank, Ltd. ..	13	....		3 002	1,87,647	545
Padmapara Central Co operative Bank, Ltd. ..	61	....	....		2,02,022	....
Nawababoga Central Co operative Bank, Ltd. .	....	..	....	....	1,20,874	....
Chandanbaisa Central Co-operative Bank, Ltd. ..	5	....	....	..	1,94,244	....
DISTRICT JALPAIGURI.						
Jalpaiguri Central Co operative Bank, Ltd. ..	7,500	..	....	..	1,29,244	9,243
DISTRICT MALDA.						
Malda Central Co operative Bank, Ltd. ..	17,104	....	....	47	1,10,875	75,825
Chanchal Raj Central Co operative Bank, Ltd. ..	1,511	....	....	...	1,40,726	363
Nawabganj Central Co operative Bank, Ltd. ..	5,423	....	....	.	67,420	....
Harishchandrapur Central Co operative Bank, Ltd.	2,491	..	....	232	1,42,381	3,100
Bengal Co-operative Silk Union, Ltd.	2,505	14,914	..	....		34,372
DISTRICT DARJEELING.						
Darjeeling Central Co-operative Bank, Ltd. ..	5	....	....	..	52,767	200
Kalimpong Central Co operative Bank, Ltd. ..	71	9,973	....	..	2,65,954	....
Pedong Central Co-operative Bank, Ltd. ..	....	..	....	4,920	1,02,362	....
Darjeeling Co-operative Milk Union, Ltd. ..	....	56,635	..	..	....	....
TOTAL OF CENTRAL BANKS	3,58,615	2,76,833	2,23,048	2,27,647	3,64,27,276	12,92,779
TOTAL OF PROVINCIAL AND CENTRAL BANKS	3,58,615	2,76,833	25,64,838	2,27,647	3,89,77,780	23,18,309
TOTAL OF PREVIOUS QUARTER ..	4,01,608	2,77,419	14,04,276	2,90,144	3,78,27,061	40,98,608

I—concluded.

qualifications.

within the movement.

Loans or deposits due to the Central Bank, by the Provincial Bank or other Central Banks.	Loans and deposits due to Provincial Bank by Central Banks.	Uncalled share capital.	Guaranteed share capital.	Other investments inside the movement.	Net profit of part year.	Rates of interest on which money is usually—		Last dividend declared.
						Borrowed.	Lent.	
22	23	24	25	26	27	28	29	30
Rs.	Rs.	Rs.	Rs.	Rs.	Rs.	Per cent.	Per cent.	Per cent.
199	....	40,100	....	1,447	6,016	3½ to 8	10½ & 12½	....
....	....	45,310	....	1,200	4,860	6½ & 7½	10½ & 12½	6½
996	....	....	....	23,595	4,307	3 & 8	9½ to 12½	....
10,494	....	45,300	....	13,225	1,826	3 & 8	9 to 12½	....
2,53,775	....	1,26,310	....	22,650	21,928	3½ to 8	9½ to 10½	9½
....	....	....	....	1,521	1,343	6 to 8	9½ to 10 15/16	....
2,065	....	....	....	....	4,825	3½ to 8	10 15/16 to 12½	....
....	....	14,275	....	4,400	1,622	3 to 9½	9½ to 12½	....
....	....	20,575	....	....	278	5½ to 8½	9½ & 10½	....
5,021	....	20,540	....	7,325	885	3½ to 8½	10½ to 12½	....
....	...	41,730	....	46,583	4,672	2½ to 8	9½ to 10 15/16	....
....	....	2	....	4,875	2,802	4 to 8	9 to 10 15/16	6
539	....	10,420	....	6,300	1,164	7½ & 8	10 15/16 & 12½	....
38	....	19,210	....	8,937	2,190	3½ to 8½	9½ & 10 15/16	3½
7,963	....	21,555	....	35,967	4,718	6 & 7½	10 15/16	....
33	....	12,220	....	6,987	1,236	4 to 8	10 15/16 & 12½	3
....	....	....	....	17,117	3,628	6½, 6½	9 & 10	5
17	....	....	....	520	1,330	6½ to 7	9 & 10	4½
264	....	....	....	....	....	3½ to 8	10 15/16	....
40,44,094	....	44,17,362	....	29,82,875	7,70,683	....	....	....
40,44,094	1,00,31,013	60,62,662	....	29,82,875	9,77,563	....	....	....
22,52,254	99,21,930	58,55,525	....	30,80,024	10,43,183	....	....	....

PART

Name of Bank.	Deposits or	
	On current or Savings Bank account.	Deposits for not more than three months.
1	2	3
	Rs.	Rs.
I.—PROVINCIAL BANK.		
The Bengal Provincial Co-operative Bank, Ltd.	25,35,988	71,000
II.—CENTRAL BANKS.		
CALCUTTA—		
Central Co-operative Anti-Malaria Society, Ltd.	....	....
Co-operative Milk Societies Union, Ltd.	7,796	....
DISTRICT 24-PARGANAS—		
Taki Central Co-operative Bank, Ltd.	11,479	....
Ninta Central Co-operative Bank, Ltd.	....	....
Diamond Harbour Central Co-operative Bank, Ltd.	4,574	....
Barasat Central Co-operative Bank, Ltd.	193	....
Gosava Central Co-operative Bank, Ltd.	7,784	....
DISTRICT NADIA—		
Nadia Central Co-operative Bank, Ltd.	9,259	....
Kushtia Central Co-operative Bank, Ltd.	9,290	....
Meherpur Central Co-operative Bank, Ltd.	5,234	....
Nadia District Co-operative Industrial Union, Ltd.	....	....
Ranaghat Central Co-operative Bank, Ltd.	7,101	....
Chuadanga Central Co-operative Bank, Ltd.	....	....
DISTRICT JESSORE—		
Jessore Central Co-operative Bank, Ltd.	8,258	30
Magura Central Co-operative Bank, Ltd.	51,512	....
Narail Central Co-operative Bank, Ltd.	....	26,010
Jhenidah Central Co-operative Bank, Ltd.	....	676
DISTRICT KHULNA—		
Khulna Central Co-operative Bank, Ltd.	21,460	93,530
Bagerhat Central Co-operative Bank, Ltd.	36,093	....
Baruli Central Co-operative Bank, Ltd.	3,076	....
DISTRICT MURSHIDABAD—		
Jangipur Central Co-operative Bank, Ltd.	14,960	....
Berhampur Central Co-operative Bank, Ltd	49,143	4,333
Lalbagh Central Co-operative Bank, Ltd.	1,239	8,406
Kandi Central Co operative Bank, Ltd.	3,301	532
DISTRICT HOWRAH—		
Howrah Central Co-operative Bank, Ltd.	....	....
Uluberia Central Co-operative Bank, Ltd.	....	....
DISTRICT HOOGHLY—		
Hooghly Central Co-operative Bank, Ltd	93,620	31
Arambagh Central Co-operative Bank, Ltd.	....	....
DISTRICT BANKURA—		
Bankura Central Co-operative Bank, Ltd.	53,004	....
Bankura District Co-operative Industrial Union, Ltd. ..	750	750
Bishnupur Central Co-operative Bank, Ltd.	....	....

II.

debentures of the kind dealt with in columns 2 and 3 of Part I.				Repayment of loans by Societies.		
Other deposits and debentures falling due—						
In twelve months from commencement of present quarter.	In next twelve months	In twelve months following.	In subsequent years.	Estimated— In twelve months from commencement of present quarter.	Estimated— In next twelve months.	Actual in twelve months preceding present quarter.
4	5	6	7	8	9	10
Rs.	Rs.	Rs.	Rs.	Rs.	Rs.	Rs.
55,19,650	32,66,600	11,87,900	96,670	50,11,600	23,40,500	10,69,174
...	....	....	....	....	....	....
36,685	3,131	22,000	....	11,934	6,000	5,934
99,448	34,700	7,000	1,94,658	1,50,000	2,00,000	47,880
....	...	....	21,585	6,000	13,919	12,556
12,880	132	....	....	50,068	...	36,511
3,450	54,075	50,000	50,000	1,65,143	....	....
34,580	. ..	....	....	51,202	339	86,332
1,14,315	2,00,000	2,57,650	....	40,000	75,000	11,727
68,423	59,190	93,049	16,590	1,50,000	1,50,000	1,68,127
12,595	12,380	16,291	1,21,338	10,000	60,000	12,595
....	....	....	....	...	500	..
58,800	78,023	69,077	....	90,672	88,941	15,265
28,232	12,715	.	1,11,310	32,490	39 885	887
28,370	1,21,646	6,150	2,51,950	52,910	42,817	33,227
80,000	95,000	1,75,325	1,11,917	75,000	95,875	2,10,181
67,915	76,820	55,147	91,940	1,22,756	65,791	32,860
250	....	10,650	450	6,728	5 874	184
53,346	2,74,765	....	....	1,05,752	1,05,615	1,00,148
71,315	22,770	11,803	22,575	1,95,340	28,861	40,992
1,375	95,908	7,100	55,500	80,000	90,000	30,161
67,625	31,820	37,57 >	30,199	1,06,932	84,210	83,075
1,81,393	1,58,802	76,179	1,48,722	59,909	39,694	15,669
53,228	37,116	39,89 >	1,24,163	6,816	219	5,334
23,140	7,079	1,022	16,299	40,000	60,000	5,022
....	....	..	....	200	300	15
....	....	....	17,869	4,500	3,000	3,330
1,78,450	1,52,800	98,000	....	1,35,927	1,20,080	1,05,200
....	.. .	....	....	26,417	11,078	10,636
47,561	31,026	9,085	86,243	1,13,804	47,613	36,411
22,971	3,374	1,600	....	7,000	10,000	1,198
8,782	2,700	1,025	....	20,562	4,355	888

PART

Name of Bank	Deposits or	
	On current or Savings Bank account.	Deposits for not more than three months.
1	2	3
II.—CENTRAL BANKS—*continued.*	Rs.	Rs.
District Birbhum—		
Rampurhat Central Co-operative Bank, Ltd.	46,341	5,175
Birbhum Central Co-operative Bank, Ltd.	47,101	....
Viswabharati Central Co-operative Bank, Ltd.	16,869	516
Nalhati Central Co-operative Bank, Ltd.	17,522	....
District Midnapore—		
Midnapore Central Co-operative Bank, Ltd.	8,856	22,142
Khelar Balarampur Central Co-operative Bank, Ltd.	30	4,986
Belebera Central Co-operative Bank, Ltd.	796	4,629
Tamluk Central Co-operative Bank, Ltd.	1,60,874	....
Mugberia Central Co-operative Bank, Ltd.	3,230	....
Balagoria Central Co-operative Bank, Ltd.	10,294	....
Ghatal Central Co-operative Bank, Ltd.	....	....
District Burdwan—		
Kalna Central Co-operative Bank, Ltd.	....	....
Burdwan Central Co-operative Bank, Ltd.	3,14,096	....
Katwa Central Co-operative Bank, Ltd.	....	....
Asansol Central Co-operative Bank, Ltd.	....	....
District Dacca—		
Dacca Central Co-operative Bank, Ltd.	35,142	....
Narayanganj Central Co-operative Bank, Ltd.	11,912	....
Manikganj Central Co-operative Bank, Ltd.	34,533	....
Bikrampur Central Co-operative Bank, Ltd.	1,895	....
Dacca Co-operative Industrial Union, Ltd.	113	....
Rajpura Central Co-operative Bank, Ltd.	2,134	....
Tangi Central Co-operative Bank, Ltd.	485	....
Baira Central Co-operative Bank, Ltd.	1,316	....
Ichhapura Central Co-operative Bank, Ltd.	....	....
Dacca Co-operative Milk Societies Union, Ltd.	1,238	....
Kaliganj Central Co-operative Bank, Ltd.	110	....
District Mymensingh—		
Mymensingh Central Co-operative Bank, Ltd.	2,80,374	....
Jamalpur Central Co-operative Bank, Ltd.	14,172	....
Tangail Central Co-operative Bank, Ltd.	3,000	2,000
Kishoreganj Central Co-operative Bank, Ltd	58,934	....
Netrokona Central Co-operative Bank, Ltd.	....	....
Pingna Central Co-operative Bank, Ltd.	10,022	....
Madarganj Central Co-operative Bank, Ltd.	385	1,922
Dhanbari Central Co-operative Bank, Ltd.	362	....
Sarisabari Central Co-operative Bank, Ltd.	167	350
Gaffargaon Central Co-operative Bank, Ltd.	486	....
Bhairab Central Co-operative Bank, Ltd.	677	....
District Faridpur—		
Faridpur Central Co-operative Bank, Ltd.	58,471	....
Madaripur Central Co-operative Bank, Ltd.	44,688	....
Gopalganj Central Co-operative Bank, Ltd.	15,432	....
Goalundo Central Co-operative Bank, Ltd.	21,978	....
District Bakarganj—		
Barisal Central Co-operative Bank, Ltd.	1,55,316	11,895
Patuakhali Central Co-operative Bank, Ltd.	....	....
Bhola Central Co-operative Bank, Ltd.	3,327	11,193
Khepupara Central Co-operative Bank, Ltd.	163	....
Mathbaria Central Co-operative Bank, Ltd.	3,330	....
Pirojpur Central Co-operative Bank, Ltd.	701	....
Borguna Central Co-operative Bank, Ltd.	No transaction.	
Amtali Central Co-operative Bank, Ltd.	Ditto	
District Chittagong—		
Chittagong Central Co-operative Bank, Ltd.	27,750	....
Cox's Bazar Central Co-operative Bank, Ltd.	9,731	....
Satkania Co-operative Industrial Union, Ltd.	200	....
Chittagong Co-operative Industrial Union, Ltd.	....	....
Chittagong Co-operative Milk Union, Ltd.	....	....

II—*continued*.

debentures of the kind dealt with in columns 2 and 3 of Part I.

Other deposits and debentures falling due—				Repayment of loans by Societies.		
				Estimated—		Actual in twelve months preceding present quarter.
In twelve months from commencement of present quarter.	In next twelve months.	In twelve months following.	In subsequent years.	In twelve months from commencement of present quarter.	In next twelve months.	
4	5	6	7	8	9	10
Rs.	Rs.	Rs.	Rs	Rs.	Rs.	Rs.
1,64,450	1,32,034	80,350	9,362	15,457	4,496	15,459
70,400	1,10,700	1,30,000	26,720	21,308	2,88,246	21,308
33,617	21,248	8,454	....	1,25,000	99,953	16,860
8,544	7,117	16,580	30,656	1,50,000	1,80,000	20,785
12,851	3,50,615	44,427	....	1,10,000	1,50,000	1,09,859
32,348	44,844	3,668	37,551	1,18,000	94,000	19,349
175	6,396	62,812	....	40,000	35,000	12,901
1,89,606	94,669	....	....	3 37,179	38,982	68,569
41 151	.	.	....	1,57,337	19,299	51,079
25,814	24,053	.	....	40,000	30,000	16,717
14,729	10,040	17,742	4,555	86,835	69,202	29,058
48,229	2,58,242	....	....	1,56,395	1,00,000	79,421
1,18,346	82,785	9,82,833	1,34,517	2,46,780	1,06,872	1,45,104
3,351	119	2,025	2,252	1,16,612	1,200	9,041
12,755	9,371	8,045	9,620	23,406	10,358	5,504
4,43,000	1,10,200	1,58,549	1,33,000	1,00,000	1,00,000	1,64,777
84,770	49,059	59,721	43,498	7,02,998	....	14,410
92,533	1,29,155	...	....	1,50,000	1,79,780	23,767
51,336	40,880	5,049	....	80,000	1,30,000	2,901
64,531	1,100	2,164	501	25,000	30,000	34,813
49,727	35,654	53,125	48,655	4,53,813	3,73,457	8,932
37,180	57,449	6,230	997	1,98,438	48,005	2,952
1,890	3,991	4,200	7,300	80,000	41,000	16,374
11,361	3,425	....	6,776	50,056	24,242	24,241
	...	....	....	12,000	14,334	14,356
21,018	480	18,001	....	60,000	53,444	28,827
6,54 828	5,33,731	5,51,583	27,758	5,26,000	5,07,000	3,70,238
10,079	62,017	56,359	1,41,024	5,57,440	1,47,742	20,121
48,735	91,676	1,23,452	1,25,020	4,52,625	4,41,035	41,154
71,008	69,944	60,688	....	3 93,547	12,885	16,982
..	5,113	8,451	30,228	2,13,734	68,054	1,992
29,085	13,666	16,000	2,827	49,000	50,000	49,075
2,450	5,098	1,632	600	74,621	19,800	57,444
4,045	2,000	1,137	1,050	98 000	5,000	31,619
10,742	6,559	..	7,339	1,33,132	11,425	2,990
4,646	2,550	2,100	4,554	1,29,639	25,402	24,951
1,450	.	.	....	1,450	1,050	....
1,15,202	86,898	71 554	1,25,490	50,000	50,000	16,666
2,17,643	19,388	1,000	57,489	1,00,000	1,00,000	28,130
23,076	37,947	30,061	1,00,534	20,000	35,000	6,154
47,832	40,484	29 546	91,051	81,389	30,632	10,462
10,84,878	69,926	51,473	1,04,614	2,00,000	1,75,000	76,055
8,920	9,640	27,793	27,980	1,64,830	....	12,472
10,456	3,017	646	27,923	2,70,000	1,80,000	75,428
11,844	....	....	5,870	5,00,000	35,560	54,185
13,580	1,074	535	4,440	80,000	80,000	17,547
26,205	22,953	15,025	10,969	1,02,195	41,395	35,033
....	..	...	....		....	....
....	....	....	....		...	....
1,52,083	73,020	49,037	....	1,70,000	1,95,500	2,46,366
68,376	....	....	....	55,775	39,050	56,604
....	....	....	....	....	....	....
		....	....	25,000	15,000	16,697
		....	....	6,139	....	9,408

PART

Name of Bank.	Deposits or	
	On current or Savings Bank account.	Deposits for not more than three months.
1	2	3
II.—CENTRAL BANKS—*concluded.*	Rs.	Rs.
District Noakhali—		
Noakhali Central Co-operative Bank, Ltd.	1,557	....
Feni Central Co-operative Bank, Ltd.	57,429	1,869
Raipura Central Co-operative Bank, Ltd.	....	9
Lakshmipur Central Co-operative Bank, Ltd.	....	2,100
Hatiya Central Co-operative Bank, Ltd.	4,810	....
Sandwip Central Co-operative Bank, Ltd.	15,542	....
Chowmohani Co-operative Industrial Union, Ltd.	6,442	435
Raipura Co-operative Industrial Union, Ltd.	10	....
District Tippera—		
Comilla Central Co-operative Bank, Ltd.	45,550	...
Laksham Central Co-operative Bank, Ltd.	....	....
Daudkandi-Gauripur Central Co-operative Bank, Ltd.	1,322	....
Tippera Raj Central Co-operative Bank, Ltd.	3,673	....
Brahmanbaria Central Co-operative Bank, Ltd	23,343	121
Nabinagar Central Co-operative Bank, Ltd.	....	....
Chandpur Central Co-operative Bank, Ltd.	22,003	....
Matlab Central Co-operative Bank, Ltd.	5,305	....
District Rajshahi—		
Rajshahi Central Co-operative Bank, Ltd.	64,616	....
Nator Central Co-operative Bank, Ltd.	....	....
Naogaon Central Co-operative Bank, Ltd.	21,506	....
Puthia Central Co-operative Bank, Ltd.	20, 72	....
Naogaon Co-operative Industrial Union, Ltd.	475	....
Naogaon Co-operative Milk Union, Ltd.	....	....
District Pabna—		
Pabna Central Co-operative Bank, Ltd.	1,85,453	....
Ullapara Central Co-operative Bank, Ltd.	4,691	....
Serajganj Central Co-operative Bank, Ltd.	48,553	....
Shahzadpur Central Co-operative Bank, Ltd.	28,637	...
Bhanguria Central Co-operative Bank, Ltd.	93	...
Shahzadpur Co-operative Milk Union, Ltd.	....	....
District Dinajpur—		
Dinajpur Central Co-operative Bank, Ltd.	2,862	....
Balurghat Central Co-operative Bank, Ltd.	20,353	....
Thakurgaon Central Co-operative Bank, Ltd.	3,151	33
Dinajpur Co operative Milk Union, Ltd.	1,303	....
District Rangpur—		
Gaibandha Central Co-operative Bank, Ltd.	33,918	....
Kurigram Central Co-operative Bank, Ltd.	10,011	...
Nilphamari Central Co-operative Bank, Ltd.	32,498	....
Rangpur Central Co-operative Bank, Ltd.	43,063	....
District Bogra—		
Bogra Central Co-operative Bank, Ltd.	1,11,879	....
Khanjanpur Central Co-operative Bank, Ltd.	....	....
Padmapara Central Co-operative Bank, Ltd.	5,935	434
Nawadaboga Central Co-operative Bank, Ltd.	2,436	....
Chandanbaisa Central Co-operative Bank, Ltd.	....	....
District Jalpaiguri—		
Jalpaiguri Central Co-operative Bank, Ltd.	5,020	
District Malda—		
Malda Central Co-operative Bank, Ltd.	40,324	....
Chanchal Raj Central Co-operative Bank, Ltd.	13,219	....
Nawabganj Central Co-operative Bank, Ltd.	..	....
Harishchandrapur Central Co-operative Bank, Ltd.	11,739	..
Bengal Co-operative Silk Union, Ltd.	125	....
District Darjeeling—		
Darjeeling Central Co-operative Bank, Ltd.	40	...
Kalimpong Central Co-operative Bank, Ltd.	33,260	....
Pedong Central Co-operative Bank, Ltd.	263	1,935
Darjeeling Co-operative Milk Union, Ltd.	14,387	....
Total of Central Banks	27,73,811	2,00,042
Total of Provincial and Central Banks	53,09,799	2,77,042

II—*concluded.*

debentures of the kind dealt with in columns 2 and 3 of Part I.)

Other deposits and debentures falling due—				Repayment of loans by Societies		
				Estimated—		Actual in twelve months preceding present quarter.
In twelve months from commencement of present quarter.	In next twelve months.	In twelve months following.	In subsequent years.	In twelve months from commencement of present quarter.	In next twelve months.	
4	5	6	7	8	9	10
Rs.	Rs	Rs.	Rs.	Rs.	Rs.	Rs.
26,336	41,520	37,707	1,23,304	88,821	68,246	23,538
31,813	19,493	61,274	1,61,109	75,000	80,000	19,428
3,900	1,100	600	48	25,000	30,000	3,427
5,222	8,069	20,963	22,342	31,550	20,118	9,974
17,017	7,931	19,400	7,584	2,41,834	16,122	37,707
18,120	19,000	22,30[illegible]	17,088	1,15,311	65,560	86,899
451	2,187	18	....	27,538	9,224	4,083
1,393	...	...	...	....	....	....
2,18,765	1,02,890	2,11,435	2,01,068	1,25,000	23,000	3,53,453
369	10	1,533	1,865	71,000	7,000	11,555
4,013	....	..	2,051	50,000	1,20,000	23,462
50,624	78,610	52,125	38,521	1,33,017	65,425	23,616
1,54,268	71,911	51,023	20,868	2,50,000	2,50,000	22,274
6,237	10,385	5,547	1,911	2,97,533	66,018	17,999
1,66,313	1,11,106	1,28,750	81,101	3,00,000	1,00,000	71,941
5,537	1[illegible],737	2,000	5,611	25,000	1,00,000	25,025
1,30,485	1,15,062	1,800	10,300	80,000	1,00,000	1,14,067
27,020	61,865	26,890	25,774	38,224	65,150	34,312
1,54,580	66,057	37,337	48,152	3,60,581	19,718	10,172
30,129	43,195	11,782	19,631	1,20,949	21,896	18,000
....	....	....	....	10,700	7,800	116
....	....	..	..	....	....	....
1,08,590	1,20,000	1,10,000	1,31,560	2,15,000	1,95,720	26,635
1,12,103	11,673	19,280	2,913	80,000	1,40,000	6,430
2,73,163	[illegible]40	2,670	18,760	3,50,000	75,000	31,324
5[illegible],303	39,500	20,100	15,000	1,20,062	1,10,000	90,0[illegible]
3,955	....	....	3,261	31,000	15,000	4,000
568	....	....	....	3,201	....	....
94,677	1,799	11,507	.. .	41,580	33,100	7,988
93,656	63,714	58,209	. ..	1,83,319	29,013	6,543
8,118	15,954	7,100	50,196	97,900	75,000	16,792
....	....	....	....	2,200	.. .	4,322
89,115	19,423	1,964	1,30,469	66,306	50,000	4,615
3,208	3,913	55	34,137	15,500	10,560	8,278
8,045	35,507	15,799	10,357	1,51,965	1[illegible],800	7,810
1,50,534	60,272	50,580	54,064	1,01,190	83,000	11,783
2,19,169	2,37,717	1,68,378	1,10,801	4,00,000	3,80,000	88,226
18,938	17,950	29,086	18,500	47,890	55,7[illegible]2	4,055
13,233	18[illegible]180	2,196	1,800	49,000	50,000	1,06,056
13,000	137	5	53,063	92,152	23,430	14,027
....	....	...	25	49,800	46,800	32,389
11,480	7,000	22,800	5,238	1,17,271	17,319	11,270
81,810	25,511	37,125	20,701	32,516	14,464	14,357
22,775	16,796	32,219	32,753	25,613	22,637	0,998
160	13,636	2,235	8,231	67,120	....	2,140
38,120	1,103	50,050	10,015	10,000	15,000	2,519
5,000	5,000	5,000	30,000	8,000	8,000	6,496
1,062	....	602	....	15,000	16,000	1,318
1,00,165	18,119	31,025	34,164	28,000	50,000	22,617
9,100	2,000	2,000	37,788	10,613	12,000	12,265
....	....	...	....	.. .	....	....
82,52,169	60,01,322	52,80,942	49,81,769	1,72,25,091	87,62,339	47,49,646
1,37,71,819	92,70,922	67,08,842	50,78,479	2,02,36,691	1,11,02,839	58,18,720

PART III.

Name of Bank.	Portion of deposits or debentures of the kind dealt with in columns 2 and 3 of Part I falling due in each quarter in twelve months from commencement of present quarter (4th column of Part II).				Repayments of loans by Societies estimated in each quarter in twelve months from commencement of present quarter (column 8 of Part II).			
	1st quarter.	2nd quarter.	3rd quarter.	4th quarter.	1st quarter.	2nd quarter.	3rd quarter.	4th quarter.
1	2	3	4	5	6	7	8	9
I.—PROVINCIAL BANK.	Rs.	Rs.	Rs.	Rs.	Rs.	Rs.	Rs.	Rs.
The Bengal Provincial Co-operative Bank, Ltd. ..	18,38,500	17,70,112	4,78,244	14,37,794	2,00,800	32,60,300	10,37,600	5,12,000
II.—CENTRAL BANKS.								
Calcutta—								
Central Co-operative Anti-Malaria Society, Ltd. ..	....	....	....	....	....	....	....	....
Co-operative Milk Societies' Union, Ltd.	8,000	20,000	10,000	3,685	5,000	3,000	2,000	1,934
District 24-Parganas—								
Taki Central Co-operative Bank, Ltd.	31,371	32,280	11,830	23,067	5,000	80,000	50,000	15,000
Nimta Central Co-operative Bank, Ltd.	....	....	....	....	1,500	1,500	1,500	1,500
Diamond Harbour Central Co-operative Bank, Ltd. ..	11,359	974	447	100	2,068	2,000	26,000	26,000
Barasat Central Co-operative Bank, Ltd.	....	450	2,000	1,000	....	65,143	50,000	50,000
Gosava Central Co-operative Bank, Ltd.	8,250	22,086	1,600	2,638	4 995	45,003	1,204	....
District Nadia—								
Nadia Central Co-operative Bank, Ltd. .. .	25,000	25,000	35,000	29,345	5,000	20,000	10,000	5,000
Kushtea Central Co-operative Bank, Ltd.	11,367	20,572	21,263	15,221	5,000	75,000	25,000	25,000
Meherpur Central Co-operative Bank, Ltd. .	700	100	2,842	8,953	4,000	15,000	9,000	12,000
Nadia District Co-operative Industrial Union, Ltd .	....	....	....	....	....	....	....	....
Ranaghat Central Co-operative Bank, Ltd. .	4,900	20,645	22,724	19,731	20,301	30,200	25,700	14,471
Chuadanga Central Co-operative Bank, Ltd. .	1,395	500	18,822	7,515	....	21,765	10,725	....
District Jessore—								
Jessore Central Co-operative Bank, Ltd. .. .	2,240	7,155	10,475	8 500	4,935	10,938	20,706	16,271
Magura Central Co-operative Bank, Ltd. .. .	13,525	15,900	23,920	20,655	5,000	35,000	25,000	10,000
Narail Central Co-operative Bank, Ltd. ..	18,704	15,312	18,297	15,632	46,043	30,840	27,306	18,567
Jhenidah Central Co-operative Bank, Ltd. ..	....	....	250	....	....	240	3,025	2,863
District Khulna—								
Khulna Central Co-operative Bank, Ltd. .. .	13,329	....	35,805	4,212	15,205	5,715	86,664	88,108
Bagerhat Central Co-operative Bank, Ltd. ..	12,706	11,561	13,258	33,700	1,42,691	8,525	38,924	6,100
Baruli Central Co-operative Bank, Ltd.	....	1,245	130	....	5,000	25,000	30,000	20 000
District Murshidabad—								
Jangipur Central Co-operative Bank, Ltd, .	17,320	19,325	14,512	16,408	27,952	25,875	31,780	21,325
Berhampore Central Co-operative Bank, Ltd. ..	27,748	65,960	48,117	39,568	3,247	22,202	11,285	23,085
Lalbagh Central Co-operative Bank, Ltd. ..	14,235	15,409	6,519	17,085	4,130	....	470	2,207
Kandi Central Co-operative Bank, Ltd.	2,051	7,933	11,491	1,675	....	10,000	20,000	10,000
District Howrah—								
Howrah Central Co-operative Bank, Ltd. .. .	....	....	....	....	50	50	50	50
Uluberia Central Co-operative Bank, Ltd. .	....	....	....	....	1,520	2,220	700	....
District Hooghly—								
Hooghly Central Co-operative Bank, Ltd... ..	60,340	49,954	43,650	24,500	46,327	34,900	28,850	25,850
Arambagh Central Co-operative Bank, Ltd. ..	....	....	....	....	13,462	2,950	4,550	5,455
District Bankura—								
Bankura Central Co-operative Bank, Ltd. ..	16,325	4,724	3,235	23,277	46,485	....	....	67,319
Bankura District Co-operative Industrial Union, Ltd...	3,142	13,228	800	5,801	7,000	....	....	....
Bishnupur Central Co-operative Bank, Ltd. ..	8,752	....	....	....	5,000	3,000	6,000	6,562
District Birbhum—								
Rampurhat Central Co-operative Bank, Ltd. ..	54 8 2	59,104	28,460	21,904	....	....	15,457	....
Birbhum Central Co-operative Bank, Ltd. ..	30,400	19,900	15,500	4,800	1,749	2,000	6,498	10,371
Viswabharati Central Co-operative Bank, Ltd. .	15,780	4 235	2,703	10,899	5,000	5,000	95,000	20,000
Nalhati Central Co-operative Bank, Ltd. ..	687	2,020	5,487	450	1,200	15,500	80,000	53,300
District Midnapore—								
Midnapore Central Co-operative Bank, Ltd. ..	6,435	21,800	14,616	....	10,000	....	25,000	75,000
Khelar-Balarampur Central Co-operative Bank, Ltd. .	4,100	7,321	8 803	12,124	10,000	30,000	65,000	13,000
Belebera Central Co-operative Bank, Ltd. ..	....	....	....	475	4,000	3,000	9,000	24,000
Tamluk Central Co-operative Bank, Ltd. .	66,479	63,742	29,490	29,895	2,52,476	9,818	27,205	47,680
Mugberia Central Co-operative Bank, Ltd. ..	4,363	13,802	5,212	17,974	....	....	78,068	79,289
Balagoria Central Co-operative Bank, Ltd. .	6,050	....	18,764	1,000	3,000	1,000	10,000	26,000
Ghatal Central Co-operative Bank, Ltd. ..	829	9,750	4,150	....	300	....	....	86,535
District Burdwan—								
Kalna Central Co-operative Bank, Ltd.	44	15,581	10,559	22,115	56,395	22,000	10,000	59,600
Burdwan Central Co-operative Bank, Ltd. .	72,762	12,836	17,640	15,108	7,872	6,930	12,835	2,19,143
Katwa Central Co-operative Bank, Ltd. .. .	100	50	206	2,905	....	....	1,46,000	612
Asansol Central Co-operative Bank, Ltd. ..	1,525	7,030	3,300	....	....	21,172	....	2,234
District Dacca—								
Dacca Central Co-operative Bank, Ltd. ..	1,68,500	2,24,000	19,500	31,000	20,000	60,000	15,000	5,000
Narayanganj Central Co-operative Bank, Ltd	13,216	22,627	33,521	14,406	5,20,348	1,82,655	....	....
Manikganj Central Co-operative Bank, Ltd.	37,058	17,234	27,671	10,570	75,000	60,000	10,000	5,000
Bikrampur Central Co-operative Bank, Ltd.	26,489	9,494	5,140	10,204	20,000	40,000	15,000	5,000
Dacca Co-operative Industrial Union, Ltd.	33,576	15,000	13,367	2,588	3,000	6,000	10,000	6,000
Rajpura Central Co-operative Bank, Ltd. .. .	1,410	4,125	3,172	41,020	26,754	4,27,059	....	....
Tangi Central Co-operative Bank, Ltd.	921	5,282	3,020	27 957	1,58,433	..	....	....
Baira Central Co-operative Bank, Ltd.	540	370	650	330	13,000	50,000	11,000	6,000
Ichhapura Central Co-operative Bank, Ltd. .	6,147	102	3,850	1,172	....	25,000	27,135	7,823
Dacca Co-operative Milk Societies' Union, Ltd. ..	....	....	....	....	3,000	2,000	3,000	4,000
Kaliganj Central Co-operative Bank, Ltd. ..	5,000	3,000	1,018	12,000	8,000	42,000	6,000	4,000
District Mymensingh—								
Mymensingh Central Co-operative Bank, Ltd. ..	1,10,843	2,42,502	1,01,538	1,09,945	63,000	1,53,000	2,28,000	82,000
Jamalpur Central Co-operative Bank, Ltd. ..	2,700	7,639	5,956	3,684	4,52,231	96,654	8,555	....
Tangail Central Co-operative Bank, Ltd. ..	6,000	30,561	8,725	3,449	1,50,392	2,35,618	66,615	....
Kishorganj Central Co-operative Bank, Ltd. ..	12,361	8,958	25,363	24,326	3,17,866	75,681	....	....
Netrakona Central Co-operative Bank, Ltd. ..	5,415	2 625	1,957	2,540	24,240	94,902	71,245	33,248
Phulpur Central Co-operative Bank, Ltd. ..	23,776	3,825	134	2,250	15,000	30,000	5,000	....
Madarganj Central Co-operative Bank, Ltd. ..	1,110	....	....	1,350	10,000	54,621	10,000	....
Dhanbari Central Co-operative Bank, Ltd. ..	500	800	1,818	927	10,000	65,000	13,000	10,000
Sharishabari Central Co-operative Bank, Ltd. ..	1,650	1,936	....	7,156	....	1,33,152	....	....
Gaffargaon Central Co-operative Bank, Ltd.	3,646	500	500	....	....	....	1,29,039	....
Bhairab Central Co-operative Bank, Ltd. ..	....	1,450	....	....	....	1,450	....	..

PART III—*concluded.*

Name of Bank.	Portion of deposits or debentures of the kind dealt with in columns 2 and 3 of Part I falling due in each quarter in twelve months from commencement of present quarter (4th column of Part II).				Repayments of loans by Societies estimated in each quarter in twelve months from commencement of present quarter (column 8 of Part II).			
	1st quarter.	2nd quarter.	3rd quarter.	4th quarter.	1st quarter.	2nd quarter.	3rd quarter.	4th quarter.
1	2	3	4	5	6	7	8	9
II.—CENTRAL BANKS—*concld.*								
	Rs.	Rs.	Rs.	Rs.	Rs.	Rs.	Rs.	Rs.
District Faridpur—								
Faridpur Central Co-operative Bank, Ltd. ..	80,130	16,776	42,535	5,752	20,000	22,000	5,000	2,000
Madaripur Central Co-operative Bank, Ltd. ..	59,511	50,208	62,529	45,305	30,000	50,000	20,000	....
Gopalganj Central Co-operative Bank, Ltd. ..	3,544	7,267	1,000	11,265	19,000	7,000	2,000	1,000
Goalundo Central Co-operative Bank, Ltd. ..	15,958	12,577	10,435	8,862	52,048	28,741	....	....
District Bakarganj—								
Barisal Central Co-operative Bank, Ltd. ..	4,75,378	2,09,200	3,45,008	55,207	1,50,000	45,000	55,000	40,000
Patuakhali Central Co-operative Bank, Ltd. ..	4,600	....	....	4,320	....	....	....	1,64,830
Bhola Central Co-operative Bank, Ltd. ..	2,614	3,485	2,178	2,179	13,007	67,500	86,000	1,03,500
Khepupara Central Co-operative Bank, Ltd. ..	....	....	....	71,944	....	25,000	3,50,000	1,25,000
Mathbaria Central Co-operative Bank, Ltd. ..	5,596	....	7,984	....	5,000	15,000	40,000	20,000
Pirojpur Central Co-operative Bank, Ltd. ..	13,000	4,000	6,000	2,205	10,000	....	82,195	10,000
Borguna Central Co-operative Bank, Ltd. ..	No transaction.							
Amtali Central Co-operative Bank, Ltd. ..	Ditto.							
District Chittagong—								
Chittagong Central Co-operative Bank, Ltd. ..	52,200	24,860	41,600	23,333	55,000	40,000	45,000	30,000
Cox's Bazar Central Co-operative Bank, Ltd. ..	45,032	3,867	6,153	13,324	1,500	13,050	28,500	12,725
Satkania Co-operative Industrial Union, Ltd. ..	....	....	....	....	....	....	....	....
Chittagong District Co-operative Industrial Union, Ltd.	....	....	....	....	1,500	4,500	8,000	11,000
Chittagong Central Co-operative Milk-supply Union, Ltd.	....	....	....	....	1,956	1,798	1,080	755
District Noakhali—								
Noakhali Central Co-operative Bank, Ltd. ..	6,707	11,760	6,960	900	6,885	49,575	24,763	7,598
Feni Central Co-operative Bank, Ltd.	8,912	10,417	7,739	7,745	15,000	20,000	25,000	15,000
Raipura Central Co-operative Bank, Ltd. ..	3,800	....	100	....	3,000	5,000	10,000	7,000
Lakshmipur Central Co-operative Bank, Ltd. ..	1,747	2,372	888	215	2,265	25,735	3,550	....
Hatiya Central Co-operative Bank, Ltd.	7,817	1,000	6,000	2,200	2,04,615	....	37,219	....
Sandwip Central Co-operative Bank, Ltd. ..	4,250	4,038	5,998	3,834	78,302	....	600	36,412
Chowmohani Co-operative Industrial Union, Ltd. ..	....	231	118	102	23,328	....	4,210	....
Raipura Co-operative Industrial Union, Ltd. ..	1,993	....	....	....	....	....	....	....
District Tippera—								
Comilla Central Co-operative Bank, Ltd.	30,000	44,000	68,120	70,645	4,000	1,00,000	20,000	1,000
Laksam Central Co-operative Bank, Ltd. ..	369	....	....	....	4,000	15,000	25,000	30,000
Daudkandi-Gouripur Central Co-operative Bank, Ltd.	4,013	....	....	....	30,000	10,000	10,000	....
Tippera Raj Central Co-operative Bank, Ltd. ..	20,852	20,000	15,771	....	....	....	....	1,23,017
Brahmanbaria Central Co-operative Bank, Ltd. ..	26,003	51,755	62,615	13,895	....	2,42,100	6,000	....
Nabinagar Central Co-operative Bank, Ltd. ..	2,028	3,032	856	321	....	28,000	2,00,000	69,533
Chandpur Central Co-operative Bank, Ltd. ..	75,519	55,697	22,076	12,111	1,45,000	75,000	1,25,000	45,000
Matlab Central Co-operative Bank, Ltd.	498	3,030	2,000	....	10,000	10,000	.. .	5,000
District Rajshahi—								
Rajshahi Central Co-operative Bank, Ltd. ..	28,267	36,720	30,911	34,587	5,000	30,000	25,000	20,000
Nator Central Co-operative Bank, Ltd.	8,760	6,560	6,600	5,700	10,955	7,525	11,916	7,828
Naogaon Central Co-operative Bank, Ltd. ..	43,888	38,329	34,313	43,050	3,03,315	34,557	19,048	3,651
Puthia Central Co-operative Bank, Ltd.	2,742	6,462	2,482	18,758	34,525	34,958	....	1,466
Naogaon Co-operative Industrial Union, Ltd. ..	....	....	....	....	2,500	2,400	3,500	2,300
Naogaon Co-operative Milk Union, Ltd. ..	....	....	....	....	....	....	....	....
District Pabna—								
Pabna Central Co-operative Bank, Ltd.	20,700	15,900	32,522	30,466	11,898	48,145	94,095	61,762
Ullapara Central Co-operative Bank, Ltd. ..	89,100	10,875	42,703	10,425	30,000	40,000	10,000	....
Serajganj Central Co-operative Bank, Ltd. ..	68,380	69,862	42,281	62,630	....	3,00,000	50,000	....
Shahzadpur Central Co-operative Bank, Ltd. ..	20,303	9,000	18,000	10,000	36,000	54,062	24,000	15,000
Bhanguria Central Co-operative Bank, Ltd. ..	1,020	2,075	260	....	10,000	15,000	8,000	3,000
Shahzadpur Co-operative Milk Union, Ltd. ..	568	....	....	....	3,204	....	....	....
District Dinajpur—								
Dinajpur Central Co-operative Bank, Ltd. ..	25,569	42,835	11,526	13,747	2,000	6,000	18,800	17,450
Balurghat Central Co-operative Bank, Ltd. ..	30,593	12,523	40,134	10,406	1,45,551	711	....	37,057
Thakurgaon Central Co-operative Bank, Ltd. ..	35	....	3,833	4,250	12,500	45,000	22,400	18,000
Dinajpur Co-operative Milk Union, Ltd.	....	....	....	....	700	550	500	350
District Rangpur—								
Gaibandha Central Co-operative Bank, Ltd. ..	20,483	9,551	23,971	35,440	6,000	40,000	12,000	8,306
Kurigram Central Co-operative Bank, Ltd. ..	....	....	3,208	....	500	8,500	3,500	3,000
Nilphamari Central Co-operative Bank, Ltd. ..	800	2,429	1,425	3,301	19,951	1,31,664	....	3,350
Rangpur Central Co-operative Bank, Ltd. ..	40,552	51,854	28,802	29,316	35,175	28,350	24,880	13,045
District Bogra—								
Bogra Central Co-operative Bank, Ltd.	41,260	50,082	57,624	70,508	1,00,000	1,50,000	90,000	60,000
Khanjanpur Central Co-operative Bank, Ltd. ..	7,930	3,200	1,090	6,718	....	25,265	22,625	....
Padmapara Central Co-operative Bank, Ltd. ..	7,460	5,159	142	466	13,500	25,800	700	....
Nawdabogha Central Co-operative Bank, Ltd. ..	....	2,000	10,000	1,000	....	92,152	....	....
Chandanbaisa Central Co-operative Bank, Ltd. ..	....	....	....	....	15,000	29,000	5,500	800
District Jalpaiguri—								
Jalpaiguri Central Co-operative Bank, Ltd. ..	1,080	550	8,000	1,900	70,000	25,813	1,230	20,228
District Malda—								
Malda Central Co-operative Bank, Ltd.	41,315	16,400	17,135	6,900	10,652	6,046	6,342	9,496
Chanchal Raj Central Co-operative Bank, Ltd. ..	11,147	3,830	6,809	1,480	2,289	10,695	7,869	4,760
Nawabganj Central Co-operative Bank, Ltd. ..	....	....	....	160	5,956	5,000	3,464	53,000
Harishchandrapur Central Co-operative Bank, Ltd. ..	24,245	75	13,800	....	....	4,000	4,000	2,000
Bengal Co-operative Silk Union, Ltd.	....	....	5,000	....	2,000	2,000	2,000	2,000
District Darjeeling—								
Darjeeling Central Co-operative Bank, Ltd. ..	....	....	1,062	....	6,000	4,000	2,000	3,000
Kalimpong Central Co-operative Bank, Ltd. ..	30,625	17,554	10,637	23,349	5,000	5,000	8,000	10,000
Pedong Central Co-operative Bank, Ltd. ..	....	....	1,100	8,000	213	100	5,000	5,000
Darjeeling Co-operative Milk Union, Ltd. ..	....	....	....	....	....	....	....	....
TOTAL OF CENTRAL BANKS	25,17,047	21,60,000	20,52,310	15,12,903	45,16,203	46,51,930	34,61,457	25,95,601
TOTAL OF PROVINCIAL AND CENTRAL BANKS ..	43,50,547	39,40,021	25,30,554	29,50,607	47,17,003	79,12,130	44,99,057	31,98,501

Annual Report of the Royal Botanic Gardens and the Gardens in Calcutta and of the Lloyd Botanic Garden, Darjeeling, for 1930-31.

ROYAL BOTANIC GARDEN.

1. **General.**—Amongst the general public who discuss the prospects of a visit to these gardens, the question of their approach is always one of first consideration. No one who is dependent on a motor car for coming—and this section of the visiting public grows in numerical importance every year—will think of starting out without first making the necessary enquiry as to the state of the roads. Their condition is a matter of public interest and for general information, therefore, it may be mentioned that the riverside road through Howrah to the gardens has been greatly improved of late and that, apart from the unpleasantness of having to negotiate an ever-increasing volume of traffic, the ease and comfort of access dependent so much now-a-days on road surface is noticeably better than it was even as late as a year and half ago.

A policy of steady repairs—the stitch in time method—seems responsible for this, and whether or not the betterment of roads is responsible there has been a marked increase in the number of visitors reaching the garden by bus and car. Praiseworthy attempts to maintain and improve the main roadways have been made and it is a pity, therefore, that obstacles to using them freely should exist. Riverways access is, of course, always the more pleasant, but in view of the ever-growing bus and car traffic and the possibility of the ferry service being restricted, it is a matter of extreme importance to these gardens and, indeed, to all interests west of the Bengal-Nagpur Railway, that free passage should prevail over this Company's line systems converging on Shalimar.

It is more pleasant, perhaps, to get on to congenial surroundings and discuss the garden itself. Both in the nurseries and flower beds, in the plant houses and in the open, there is a year's steady progress to report. Climatic conditions were normal and at no time of the year had special measures to be taken to help out the ordinary horticultural work. Rainfall recorded for the year was about the usual, its distribution was good and this with an absence of cyclonic storms combined to make the year a favourable one for all horticultural operations. The permanent tree and shrub collections in the open were enriched by numerous additions and long-established specimens have not been spared in an effort to make the gardens more attractive. Perhaps the scientific officer is too apt to think of the contents of a garden as botanical specimens and to concern himself with the presence and arrangement of these rather than with their form and beauty. A break with tradition is, therefore, not necessarily disadvantageous to methods—and it may be invigorating and refreshing—to have for a time on the staff an officer whose experience brings ideas of big scale tree pruning and surgery. Mr. Fothergill, the newly appointed officer in charge, was assiduous in his endeavours, by judicious pruning and lopping, to restore the appearance of old time plants that had grown away from their natural stateliness and beauty and by larger scale operations to give a chance of fresh life to dying and diseased specimens.

The desirability of making the garden richer as a living repository of the more beautiful and useful tropical and semi-tropical trees and shrubs is always in mind, and the following additions of plants new to the collections show what has been accomplished to this end during the year. Of new trees there have been added *Alphonsea lutea*, *Erythrina acanthocarpa* and *Blackii*, *Prosopis velutina*, and *Melaleuca crassifolia*. Of shrubs, *Cordia Holstii*, *Hibiscus Abelmoschus*, *Anona microcarpa*, *Erythrina tomentosa* and *indica*, *Parkinsonia microphylla*, *Lantana crocea*, *Psidium Friedrichsthalianum*, *Bauhinia Krugii*, *Millettia dura*, *Bambusa quadrangularis*, *Ptelea trifoliata*, *Pandanus Sandei*, *Costus discolor*, *Fatsia papyrifera* and *Cassia artemisioides*. Of creepers, *Lonicera Leschenaultii*, *Passiflora pruinosa*, *Cissus Lindeni*, *Cissus albonitens*, *Boussingaultia baselloides*, *Bougainvillaea spectabilis*, varieties: *Fraser* and *Cypheri*. In some cases single numbers of these only have been available, but in most cases three or four specimens have been planted and in a few there has been material for groups. Experience has shown that not all planted out have succeeded but, as explained

in previous reports, repetitions of those that fail will be made from the nurseries where an ever-increasing variety is being developed by the accession of seeds and plants from India and abroad.

The nurseries are now much richer than at any time in the previous experience of the writer and, although the additions planted out to permanent situations are too small to catch the eye, and insignificant as yet as producers of scenic and group effects, they are yet plentiful enough to make certain in future of a much richer and more interesting botanical garden.

It is unfortunate that the display of cold weather annuals seldom coincides with the New Year period. They are never at their best till later, but this year's display, while possibly not surpassing former years in mass production, has been easily the best seen here in respect of individual specimens. As in the past few years they have been staged at the more frequented and open spots of the garden and have been much admired not only by the general public but by the trained horticulturist. This is a visitor whose eye looks critically and who usually has never yet been known to admit his own results as inferior or to lack experience or knowledge of something better. His approbation is, therefore, sought. This year it was as freely given as it was deserved. In order that the gardens may look more attractive during the Christmas and New Year Week, the period when they are most frequented, arrangements have been suggested for a display of bulbous plants to take the place of the annual stagings before the usual supply of potted flowers is ready. The idea is worth following up for the development of bulbous plants is less at the mercy of weather conditions and many of this class lend themselves to forcing methods. In addition to potted annuals staged in groups throughout the garden, the usual area of flower beds was maintained. Minor rearrangements of beds were made in the main flower garden and a new harbaceous border, containing amongst others some beautiful varieties of *Gladiolus*, was opened round the smaller palm house.

The Orchid house was as usual a source of great attraction during the first two warm months of the year. The display was normal and calls for no special mention. Species of *Vanda*, *Catasetum*, *Cattleya* and especially *Dendrobium* comprised the bulk of the display. The rarer kinds of Orchids, of which the gardens possess a few fine specimens, are not risked in the houses open to the public, and this for reasons that will suggest themselves to all. But these and also a fine collection of ferns and *Cacti* under glass can always be visited by special arrangement.

Needless to say none of the garden schemes sanctioned and awaiting funds could be proceeded with during a year financially so difficult as that just passed. Garden labour has, perforce, to remain in its insanitary hovels and make do. Neither the river bank nor the roads, the care of which was decided some years ago as an unsuitable charge for garden officers, has yet gone over to departments of Government specialising in these works. This leaves them a charge on garden funds proper, and, as both take not a little upkeep, it has been impossible to do anything in the way of other large scale garden improvement. Mr. Fothergill has made praiseworthy attempts to keep the lake edges and surfaces in a sanitary condition and a few of the main roads have had specialised asphalt treatment, but in respect of roads, river bank and tanks the gardens are living on capital value and the best that can be done in the present conditions of financial stringency is to distribute the funds available over all works according to immediate necessity and to stave off the condition of garden deterioration that looms ahead. This is the policy followed. It is unsatisfactory from every point of view and especially is it uneconomical as allowing only patchwork where thorough repair is needed, but it appeals in present conditions as most in tune with the spirit of co-operation and it is preferable to the alternative of letting ruin overtake certain works destined for other departments.

Mechanical innovations cannot be said to appeal to the local popular imagination and the institution during the year of a motor tractor with grass cutting machines has drawn the usual resentment as a disturbance of old time methods. But the tractor has come to stay, for it is cheaper, quicker and more effective than the grasscutter and scytheman and makes conservancy easier for a staff now hard put to it to maintain the garden as it formerly was.

From the visiting public's point of view the most urgent scheme is that for the provision of drinking water. Funds for this were allotted but had to be withdrawn on account of the prevailing financial condition.

The completion of this simple and inexpensive scheme would, possibly, do more for the popularity of these gardens than any other measure. Visitors complain of the drawback all the time and in the hot weather, it will be understood, complaints are not lacking in pointedness. One would like to think of public spiritedness extending in this direction. The giving of water has come down through all history and in all lands as an action bespeaking goodwill, beneficence and charity. Even the dumb animals are not forgotten in this respect. Here at the Royal Botanic Garden the most long suffering animal is man. He it is who suffers and who would bless a public benefactor.

2. **Plant and seed exchange.**—Records show some 284 plants received and 14,524 sent out. As usual Government institutions, District Boards, Municipalities and Railways are the chief recipients. The garden took its share in staging materials for the annual show at Alipore held under the auspices of the Agri-Horticultural Society. The display of *Dahlias*, in particular, attracted attention and a miniature flower garden set up apart from competitive exhibits, was also much admired.

Besides two casks of mahogany seed received from Kew, 47lbs. and 286 packets of seed were distributed while 215 packets were received, mainly from institutions abroad. For the information of botanical and horticultural institutions throughout the world it may be mentioned that the common practice of issuing exchange seed lists is not regularly followed by the Royal Botanic Garden, but its services are freely at the disposal of such institutions and all are invited to communicate when the question is one of obtaining Indian material.

3. **Herbarium and Library.**—Routine work on acquisition, identification, distribution and loan has proceeded uninterruptedly throughout the year. Prominent amongst distributed lots are 611 specimens of Himalayan plants to Austria, 692 Malayan duplicates to Washington and some 1,765 sheets to Dr. Cowan at Edinburgh. For acquisitions our thanks are chiefly due to the Director, Botanic Gardens, Singapore, for 286 duplicate specimens of South-East Asian plant; to the Mycologist in charge, Natal Herbarium, Botanic Gardens, Durban, South Africa, for 100 duplicates; to the Systematic Botanist, Coimbatore, for 243 duplicates; to the Regius Keeper of the Edinburgh Botanic Garden for 137 sheets; and to the National Museum, Washington, for 46 duplicates of New World plants.

Specimens of South Indian plants have as usual been on loan to Kew in connection with the continuation of the "Flora of Madras." To Kew has also gone on loan small numbers of old sheets of *Psychotria* and *Ixora* to help clearing up difficulties on the systematic position of certain little known members of these genera. For a forthcoming work in the genus *Trapa* all our material of this aquatic has gone to Dr. Glück of Heidelberg as also certain fresh material to aid in the same study. About 1,500 sheets have been incorporated during the year and 1,115 genus or species covers renewed. Repair, mounting and poisoning work have been carried on as usual.

To Mr. Kanjilal has gone, at different times, quite a number of authenticated species to aid him in his work on the "Flora of Assam." Mr. Kanjilal has spent a good deal of time at work on his material in the herbarium and Mr. Parkinson spent some weeks on collections from Burma that had remained unplaced or the identifications of which were for various reasons still considered tentative. The short time at his disposal prevented an examination of all the material, but enough was done to indicate the presence of new or interesting species. In addition to his work Mr. Parkinson gave much appreciated help in the identification of garden Bamboos. Mr. D. Datta of the Indian Agricultural Service visited the herbarium for some time towards the end of the year in connection with his enquiry into the grasslands of Bengal. His visit resulted in arrangements for collaboration with the Curator of the Herbarium and together these officers have a paper on this subject under preparation. These visits for botanical work are mentioned as types of which Sibpur could wish more.

Several survey tours were undertaken during the year. Of survey officers, Mr. S. N. Bal toured with Mr. Biswas in the Bikrampur area of East Bengal, in the Naga Hills and in Manipur and much material accrued to the herbarium as a consequence. Mr. Srinivasan continued exploration in the Garo Hills and brought some 2,000 sheets containing some 500 species. His interest in and ability as a photographer is being directed towards photographically recording, both whole and in dissections, some of the more interesting garden plants. The most junior officer, Mr. Badhwar, has spent nearly the whole year on tour in

the North-West. His work is mainly economic, being an enquiry into the possibilities of the North-West as a source of Santonin, but his botanical interests are wide and the herbarium is likely to be considerably the richer by reason of his general collections. Towards the end of the year the Curator of the Herbarium was deputed to continue botanical exploration of the Burma Cinchona Reserve area, a survey that is yielding much material and that will be continued as funds and staffing arrangements permit.

To the office and herbarium staff was entrusted the work of distributing a fairly large quantity of seed of *Aleurites Fordii* received from Kew at the close of the year. India shows some promise of being a suitable home for the Tung Oil Plant and this distribution was part of an effort to demonstrate the local possibilities of this oil industry. Tea gardens of Assam, especially, are interested in this importation.

The routine work of the library has been going on as usual, but accessions have been greatly restricted by the fact that library funds have to finance departmental publications as well as do library work proper. In view of the sums required for the publication of the Annals, all that could be done for the library was to maintain a restricted supply of the most necessary botanical periodicals. Some 50 copies of Dr. Cowan's "Trees of Northern Bengal" have been distributed from the library during the year.

4. **Publications.**—Of garden publications, Volume XIII of the Annals, being Professor Martelli's Asiatic Palms, Coryphea, has passed through the Press. With the issue of this volume a halt is called for a time at least in this, the greatest work ever attempted on the palms. The next volume will be Sir David Prain and Mr. Burkill's monograph of the genus Dioscorea and by the end of the year the bulk of the plates for the first half of this work had already been prepared.

Of the records, Dr. Brühl's "Census of Indian Mosses" has appeared. It is a valuable compilation on the group in which is brought together much of the information that has been accumulated by previous workers, as well as much that is the result of the personal observation of the author. It will be an incentive to young Indian botanists to tread in this and other engaging fields of Botanical study.

5. **Finance.**—Out of a total budget allotment of Rs. 50,279 for staff and permanent establishment, Rs. 50,223 were spent and under all other heads there was a net saving of Rs. 431 out of a net grant of Rs. 65,049. As a measure of retrenchment necessitated by the prevailing financial difficulty, a sum of Rs. 5,493 had to be surrendered to Government. Receipts of the department during the year amounted to Rs. 670-13-3.

6. **Staff.**—The writer held charge as Superintendent and Mr. Biswas was Curator of the Herbarium throughout the year. Up till the end of July Mr. N. Mitra was Curator of the Garden. Thereafter, he proceeded on 28 months' combined study and other leave. The continuance of his work as Curator till the end of the year was provided for by bringing in a trained horticulturist, Mr. Fothergill, from the Cinchona Branch of the service. Maulvi Quasem Ali officiated as Assistant Curator throughout the year and Mr. Joneja very ably filled the post of Overseer. The clerical establishment headed by Babu Ashutosh Banerjee, in his customary, forceful and thorough manner, worked loyally and well. With minor exceptions, subordinate officers and all the clerical establishment have been loyal.

CALCUTTA GARDENS.

Efforts were made to improve the standard of excellence of flowering annuals exhibited in different parts of the Gardens. Some fifty different species of plants were introduced and stocks of ferns and potted palms and orchids were rearranged in the nursery. Several newly laid out beds not only increased the decorative effect but prevented the public from making unsightly short tracts and thereby spoiling the beauty of the lawns of the gardens. The arrangement of shifting refuse and other material in motor lorry resulted in greater facility of transport. Difficulties of keeping the Eden Garden tanks in sanitary condition have temporarily been overcome by leasing out the tanks for pisciculture. Under this arrangement the lessee has to keep the tanks clean and to pay a sum of Rs. 200 annually, and this is an item of importance so far as garden expenditure is concerned.

Funds provided for the repair of the garden roads were withdrawn and this will entail a reversion to the old practice of a large expenditure over four years or so. This, unfortunately, is more expensive as well as less satisfactory in the long run.

Finance.—Out of a sanctioned allotment of Rs. 23,059, there was a small saving of Rs. 89. A total revenue of Rs. 313 obtained in the Dalhousie Square section by issuing fishing passes and by leasing out tanks of the Eden Gardens was paid into the Treasury.

Staff.—Mr. M. Jones, officer in immediate charge under the Curator, creditably held the post of Assistant Curator, Government Gardens, throughout the year, and Mr. Gholam Mohiuddin was temporary Overseer from the 22nd April 1930 till the end of the year.

LLOYD BOTANIC GARDEN, DARJEELING.

A few inches less rainfall than the normal and a hailstorm did not affect the general condition of the plants of the garden. Considerable success has been attained by Mr. S. N. Basu, the Curator, in his attempt to increase the æsthetic and horticultural value of the garden by laying out more than a hundred artistic beds, and by keeping the roads, garden houses, lawns and tanks tidy. Suitable sitting accommodation under the shades of the trees have also been provided for the public. Many new varieties of annuals have been grown this year for exhibition. To replace the old stock of the garden some varieties of *Magnolias*, *Azaleas*, *Camellias* and *Cherries* have been imported from Japan. By horticultural experiment the Curator has been successful in propagating some of the rare species of the garden, such as *Larix Griffithii* and *Meconopsis grandis*. If the latter can be fruited this garden may be in a position to meet the demand, for the seeds of this species, of many of the gardens. The garden has been enriched by planting about 547 young trees and shrubs. About 7,703 seeds, 2,228 plants, 120 bulbs and 8,141 seedlings have been distributed to the different botanical, horticultural and other institutions of the world. Seeds of *Meconopsis grandis* collected this year have been supplied to the Director, Royal Botanic Garden, Kew; Regius Keeper, Royal Botanic Garden, Edinburgh, the Keeper of Royal Botanic Gardens, Glasnevin, Dublin, and Sir Reginald Spence. Collection of Alpine seeds has been made from Jongri plains and Gyache La and the garden thus maintains its tradition as an important centre for the distribution of Alpine plants.

Seeds and plants, for His Majesty's Royal Park, under the orders of His Excellency the Governor of Bengal, were also collected in Bhutan. The success of the collection was largely due to the willing help given by Raja S. T. Dorji, the British Agent in Bhutan. Some of the plants collected are being grown in baskets and are being prepared for the onward journey. As desired by His Excellency 115 packets of seeds collected chiefly in Bhutan and in the Alpine Himalayas of Sikkim, have been handed over to the Private Secretary to His Excellency the Governor for His Majesty's Royal Park.

About 44,000 visitors paid visits to the garden and the garden thus holds its time-honoured reputation for botanical interest and popularity as a public resort.

Finance.—Out of a total allotment of Rs. 19,078 under all heads Rs. 19,039 were spent leaving a small balance of Rs. 39 as savings.

Staff.—Mr. S. N. Basu held charge of the post of Curator till the 30th March 1931. Thereafter, Mr. J. E. Leslie, the permanent incumbent of the post, returned from leave and took over charge on the 31st March 1931.

C. C. CALDER,

Superintendent, Royal Botanic Garden, Calcutta.

Report of the Honorary Committee for the management of the Zoological Garden, Calcutta, for the year 1930-31.

NOTIFICATION.

Minister-in-charge: The Hon'ble Khan Bahadur Maulvi K. G. M. Faroqui.

No. 403T.A.I.—14th September 1931.—The Annual Report of the Honorary Committee for the Management of the Zoological Garden, Calcutta, for the year 1930-31 and Government letter No. 404T.A.I., dated the 14th September 1931, acknowledging receipt of the report, are published for general information.

L. R. Fawcus,

Secy. to the Govt. of Bengal.

Report of the Honorary Committee for the management of the Zoological Garden, Calcutta, for the year 1930-31.

The Committee have the honour to submit their report for the year ending 31st March 1931, supplemented, as in former years, among other items, by—

(1) the Superintendent's report upon the Zoological collection;

(2) abstract of accounts of ordinary receipts and expenditure; and

(3) monthly returns of visitors and gate receipts and a list of donors and their donations.

The Committee consisted of—

The Hon'ble Mr. Justice P. L. Buckland, KT., F.Z.S., *President.*

W. K. Dods, Esq., *Vice-President.*

E. H. Marshall, Esq., *Honorary Secretary and Treasurer.*

Members.

Nominated—

Nawab Sir Asif Qadr Saiyid Wasif Ali Mirza, Khan Bahadur, Mahabat Jang, Nawab Bahadur of Murshidabad, K.C.S.I., K.C.V.O.

Sir David Ezra, KT., F.Z.S., M.B.O.U.

Surendra Nath Laha, Esq.

Lieut.-Colonel E. H. Brown, I.M.S. (Retired), M.D., D.P.H., F.R.C.S.E., F.Z.S., F.L.S.

Dr. Satya Charan Laha, PH.D., F.Z.S.

Lieut.-Colonel Sir F. P. Connor, D.S.O., F.R.C.S., I.M.S.

Rai Ajit Nath Das Bahadur, F.Z.S., M.R.A.S.

Sir Hari Ram Goenka, Rai Bahadur, C.I.E.

K. C. De, Esq., C.I.E., I.C.S

G. Morgan, Esq., C.I.E., F.R.H.S., F.Z.S., M.L.A.

Maharaj-Kumar Uday Chand Mahtab, B.A., of Burdwan.

T. Ameer Ali, Esq., BAR.-AT-LAW.

Dr. Rai U. N. Brahmachari Bahadur, M.A., M.D., PH.D.

Rai Bijay Krishna Basu Bahadur.

Major-General W. V. Coppinger, C.I.E., D.S.O., M.D., F.R.C.S.I., I.M.S.

S. C. Lyttelton, Esq.

Nawabzada A. S. M. Latifur Rahman, M.A. (Cantab.), BAR.-AT-LAW.

Ex officio—

The Commissioners of Divisions in Bengal.

The Executive Engineer, 2nd Calcutta Division, Public Works Department.

The Director of Public Health with the Government of Bengal.

The President of the Asiatic Society of Bengal.

The Director of Public Instruction, Bengal.

The Natural History Secretary of the Asiatic Society of Bengal.

The Director of Land Records.

The Director, Civil Veterinary Department, Bengal.

The Professor of Comparative Anatomy and Zoology, Medical College, Calcutta.

The Superintendent of the Royal Botanic Garden, Sibpur.

The Mayor of Calcutta.

The Principal of the Bengal Veterinary College, Calcutta.

The Conservator of Forests, Southern Circle, Calcutta.

The Committee record with deep regret the deaths of R. D. Mehta, Esq., C.I.E., G. C. Mandal, Esq., and Dr. B. L. Chaudhuri, D.SC.

Appointment.—The following new members were appointed during the year:—

Rai B. K. Basu Bahadur.

S. C. Lyttelton, Esq.

Major-General W. V. Coppinger, C.I.E., D.S.O., M.D., F.R.C.S.I., I.M.S.

Nawabzada A. S. M. Latifur Rahman, M.A. (Cantab.), BAR.-AT-LAW.

The Conservator of Forests, Southern Circle (*ex officio*).

Resignation.—Nawab A. F. M. Abdur Rahman, Khan Bahadur, resigned his membership during the year.

Lieut.-Colonel E. E. Waters, M.D., M.R.C.P., I.M.S., having left India with no intention of returning his name was removed from the list of members.

Staff.—Several changes took place in the Garden's staff during the year. Rai B. K. Basu Bahadur, who had held the post of Superintendent of the Gardens since 1908, retired on pension on the 31st March 1930, and Mr. S. Ganguli, the First Assistant Superintendent, was appointed in his place on a year's probation. Mr. N. Banerji, Second Assistant Superintendent, was promoted to be the First Assistant Superintendent, and the Committee recommended that his post be filled by Khan Sahib S. M. Yaqub Khan, who was appointed on the 9th April 1931.

The Committee desire to place on record their appreciation of the services of Rai Bahadur B. K. Basu during whose long period of service the collection and the Gardens were always well maintained and to whom full credit should be given for the execution of the improvements carried out during his term of office resulting in the collection and Gardens being handed over to the charge of his successor in a condition not excelled at any time in their history.

Mr. N. Mukherji, the Overseer of the Garden, having qualified himself as a Veterinary Surgeon from the Bengal Veterinary College, proceeded to London on a year's leave from 1st August 1930, to pursue his studies in Veterinary Science.

The following is a list of the superior staff of the Garden at the end of 1930-31:—

Superintendent—Mr. Somadev Ganguli, C.M.Z.S.

First Assistant Superintendent—Babu Nagendra Nath Banerji, G.B.V.C., F.Z.S.

Storekeeper—Babu Jugal Kishore Roy.

Overseer—Mr. Niranjan Mukherji, G.B.V.C.

Clerk—Babu Tarak Chandra Chatterji.

Gate-Clerk—Babu Bepin Behari Chatterji.

The menial staff of the Gardens at the end of 1930-31 comprised, in addition to temporary men who were engaged as required,—

1 salutri	2 chaprasis
1 jamadar	1 carpenter
8 durwans	2 bhistis
20 keepers	1 cook
14 gardeners	1 head gardener
3 sweepers	2 cartmen
1 night-watchman.	1 syce

1 scytheman.

The health of the collection was good during the year under review. There was no epidemic except an outbreak of Foot and Mouth disease amongst the gayals in the South Extension, but the prompt measures immediately taken enabled it to be completely stamped out without loss. A serious loss has, however, been sustained in the death of the male Indian rhinoceros which took place suddenly on the 21st May 1930. A *post-mortem* examination was conducted by the Principal, Bengal Veterinary College, and the viscera were sent to the Chemical Examiner to the Government of Bengal for report. Traces of arsenic were detected in the viscera and it was concluded that the death of the animal was due to poisoning by arsenic administered by some unknown and malicious person. To detect the perpetrator proved impossible, and the Committee are at a loss to account for so wanton an outrage which can profit no one and only diminishes the interest of a collection which is maintained for the instruction and entertainment of the public. The loss is the more serious by reason of the circumstance that it is most difficult to obtain a specimen to mate with the female in the collection.

Many interesting breeding results took place during the year and a large proportion of the young animals born were reared.

As was stated in the last year's report it was intended to reduce the road area of the Garden and to increase correspondingly the grass area. The first section of this work was commenced as soon as the rains began and completed in good time before the cold weather. The areas in front of the Entrance Gate, in front of the Reptile House, adjoining the Peacock House and in the New Extension were re-aligned and laid out in accordance with the orders of the Committee. The drive round the Gardens from the Entrance Gate on the east to the Reptile House was reduced to 20 feet in width and from the Reptile House to the Entrance Gate to 12 feet. All adjacent paths and roads were also reduced in width. The grass area round the Schwendler Memorial was increased as also the areas between the Southern Extension and the Central Monkey House. The result of these alterations has been largely to improve the appearance of the Gardens, in addition to reducing the cost of maintaining roads and paths.

The only work of importance undertaken during the year is the New Aviary measuring 39 by 29 feet divided into 8 compartments. This aviary is built on a high plinth and with a very thin mesh of strong link wire every effort has been made to make it rat-proof. It has been stocked with many varieties of new birds, making a fine display.

To deal with large crowd of visitors on holidays another shed with additional turnstiles has been constructed on the northern side of the main Entrance Gate.

During the past year the annual repairs were carried out as usual and with the exception of the boundary wall, all large houses were cleaned, repaired and repainted of which the following is a list:—

Dumraon House.—The house was thoroughly repaired and painted. The iron bars of some of the inner cages were repaired and the wooden doors were attended to and leaks in the roof repaired.

Paddocks.—The wood work and the roofs of the kiosks of the Barasingha Enclosure and the Banteng Enclosure having fallen into very bad condition, they were thoroughly repaired and the wooden roofs were covered with zinc sheets and painted.

Sarnomayi House.—Thorough repairs were done to this house. The sand plastering and wood work of the inner rooms had been damaged by the parrots and were repaired. The outside walls were colour-washed and the doors and windows painted.

Burdwan House.—The roof was overhauled and made watertight. The sand plaster was scraped off where necessary and new sand plaster substituted. The outer and inner dens were repaired and lime-washed and outside walls colour-washed.

Servants' Quarters at Begunbari.—The servants' quarters needed repairs badly and were overhauled. New drains were laid and all the rooms were put in good repair, cleaned and painted.

Store Godown.—Extensive improvements have been made to the Store Godown. The floors of the sheds having subsided in many places, were relaid and the corrugated roofings repaired and renewed. The terraced roof of the godown was overhauled and made watertight.

The whole godown was cleaned and inside walls lime-washed and outside walls colour-washed. The wood work and the doors and windows were painted. The following buildings were repaired and repainted:—

Entrance Lodge and Office, Refreshment Pavilion, Sonebursa Enclosure, Gubbay House, Reptile House, Murshidabad House, Indian Refreshment Room, Small Carnivora House and Schwendler House.

The following houses were repaired and colour-washed:—

Ezra House, Rodent House, Bear House and Tapir Enclosure.

In addition to the above, a considerable amount of work of a minor but nevertheless important character has been carried out during the year. Included in such work are the repairing and replacing of worn wire-netting on aviaries and enclosures, the repairing of fences, repairing roofs and floors, rat-proofing of buildings.

The lawns, flower-beds and paths were suitably maintained in orderly condition and considerable quantities of vegetables were grown in the vegetable Garden for the use of the collection.

In addition to ordinary routine work new flowering shrubs were planted and old trees were replaced by others. There has been a marked improvement in the general cleanliness and absence of litter throughout the Gardens. Many exhibits were displayed at the Agri-Horticultural Society's Flower Show and the Garden was awarded several prizes.

There was a considerable falling off in the Entrance receipts of the Garden. This may be accounted for by the general economic depression, particularly, though not entirely, in connection with the receipts on Sundays. It may also be attributed to disturbed conditions resulting in the public not availing themselves of the opportunity afforded by holidays and other non-working days of visiting the Gardens. It is to be hoped that such effects are only transitory for it can be asserted with confidence that at no other Zoological Gardens can so large and varied a collection be seen at a cost of one anna. The financial condition of the Garden, however, is on the whole satisfactory, due to the rigid economy which has been practised during the year in all departments.

The following is a comparative statement of visitors and receipts for the last four years:—

	Number of visitors.	Receipts.	
		Rs.	A.
1927-28	1,107,161	76,701	2
1928-29	1,136,910	78,333	0
1929-30	1,109,901	75,609	3
1930-31	970,604	66,082	13

A large number of children under four years of age and school children, attended by their teachers, were admitted free. On the occasion of the Fancy Fair on 31st December 1930 and 1st January 1931, 9,346 people visited the Garden.

In addition, 51,731 persons visited the Gardens on free days. A detailed statement of the number of visitors and receipts appears in Appendix B.

The thanks of the Committee are due to those ladies and gentlemen who have added to the Zoological collection, a list of which is given in Appendix C. Thanks are also due to those who kindly offered to present animals to the Gardens, but whose offers could not be accepted, either because the particular species was already sufficiently well represented or owing to want of accommodation.

The Committee also desire to express their thanks to the following Railway and Steamer Companies for kindly conveying the animals belonging to the Gardens free of charge:—

East Indian Railway, Bengal Nagpur Railway, British India Steam Navigation Co., Ltd., Peninsular & Oriental Steam Navigation Co., through Messrs. Mackinnon Mackenzie & Co.,

and Rivers Steam Navigation Co., Ltd., through Messrs. Macneill & Co., and Messrs. Hoare Miller & Co., and Lionel Edwards, Ltd.

The Corporation of Calcutta sanctioned a grant of Rs. 26,233-6 to the Garden for the year under report, and the amount of the rate bills in respect of the Garden was adjusted against the sanctioned grant as the rate bills fell due. The Committee desire to take this opportunity of expressing their renewed thanks to the Corporation of Calcutta for their generous contribution to the funds of the Garden.

Thanks are also due to the Officer Commanding and Officers of the 1st Battalion, 5th Mahratta Light Infantry Regiment, stationed at Alipore, for permitting their regimental band to play at the Garden on Tuesday afternoons, free of charge.

The Committee are much indebted to those members of the public who send old and broken-down horses to the Zoological Gardens, where they are disposed of under the most humane conditions.

E. H. MARSHALL,
Honorary Secretary.

P. L. BUCKLAND,
President.

SUPERINTENDENT'S REPORT.

I have the honour to submit my report on the condition and progress of the Zoological collection.

The following comparative table shows the numbers of the various collections during the last four years:—

Year.	Mammals.	Birds.	Reptiles.
1927-28	365	1,244	105
1928-29	342	1,196	173
1929-30	362	1,299	130
1930-31	381	1,719	186

The collection of animals brought together during the year was varied and imposing. Some extremely interesting additions have been made to the collection of Birds of Prey House during the year. The most notable amongst these are Bonelli's hawk-eagles, booted eagles, pied harriers, turumti falcon, white-headed ospreys, etc., which are all new to the collection. For all these additions the Gardens are indebted to Mr. W. K. Dods.

Mr. E. H. Marshall presented to the Gardens a valuable collection of Himalayan birds including a pair of green magpies which are new to the collection.

Amongst other important gifts deserving special mention were:—

1 Blyth's tragopan pheasant—Presented by Captain E. Johnstone.

1 Malayan bear—Presented by R. MacAlpine, Esq.

2 red-winged parrakeets—Presented by Alfred Ezra, Esq.

2 Chinese water deer—Presented by Alfred Ezra, Esq.

3 baby galagos—Presented by Sir David Ezra, KT.

A large number of animals were purchased the most important being the following:—

5 dusky langurs.
4 two-wattled cassowaries.
1 white-winged wood-duck (new to collection).
2 golden langurs.
1 clouded leopard.
3 grey-breasted parrakeets (new to collection).
2 squirrel monkeys (new to collection).
4 Victoria crowned pigeons.
2 lion marmosets.
1 Bahama pintail duck (new to collection).
2 white-fronted Capuchin monkeys (new to collection).
2 white-throated Capuchin monkeys (new to collection).
1 brown Capuchin monkey (new to collection).
1 De Brazza guenon (new to collection).
1 tiger cub.
1 woolly monkey.
2 blue-cheeked lories (new to collection).
1 lion-tailed monkey.
1 snow leopard.
1 bear cat.
5 Blyth's tragopan pheasants.
1 golden cat.
2 Tibetan lynxes.
1 white-rumped lory (new to collection).
2 pigmy hogs.
1 Duyvenbode's lory (new to collection).

The following were received on exchange account during the year:—

From G. B. Chapman, Esq., F.Z.S.—

One chimpanzee, two scarlet ibises, one Hyacinthine macaw, one Brazilian tapir, one blue jay, one lion marmoset and one kinkajou.

From Toronto Zoo—

Six Canada geese, two snow geese, two blue-winged geese and two summer ducks.

From Dr. S. C. Law—

One pair red jungle fowl, one pair masked love birds and two pairs zebra finches.

From the Wellington Zoo—

Two red deer.

From the Sydney Zoo—

Two Rufous kangaroos, two Bennett's wallabies, two Llamas, two emus, six Pennant's parrakeets, two red-winged parrots, three king parrots, and three blue mountain lories.

From the Dublin Zoo—Five swans.

From the Melbourne Zoo—Three great kangaroos.

From the Adelaide Zoo—

Two bronze-winged pigeons, two Cereopsis geese, two wedge-tailed eagles, three red-rumped parrakeets, two black-tailed parrakeets, two rose hill parrakeets, two Barnard's parrakeets.

From the Lahore Zoo—Two Indian gazelles.

The following is a list of animals and birds that were born in the Garden:—

1 Barbary sheep.	5 spotted deer.
3 hanumans.	2 wild pigs.
1 fallow deer.	3 hog deer.
4 spotted-billed ducks.	2 Indian antelopes.
7 Fischer love birds.	4 four-horned antelopes.
6 black-headed ibises.	2 Javan mouse deer.
5 peacock pheasants.	1 weeper capuchin.
3 Sonnerat's jungle fowl.	1 llama.
2 gayals.	1 nilgai.
1 red deer.	1 Barasingha deer.
1 hippopotamus.	2 yellow budgregars.
1 black-striped wallaby.	2 Java sparrows.
1 barking deer.	9 Russell's vipers.
2 sambar deer.	1 gecko.
1 brow-antlered deer.	2 scorpions.

The following were captured in the Gardens:—

7 hanumans.	1 cobra.
2 rat snakes.	1 Rhesus monkey.

1 water snake.

Eggs were laid but not hatched by the following birds:—

White rheas, emus, black swan, chakar partridge, Swinhoe pheasant, Argus pheasant, lesser kestrel, blue budgregar and ring pheasant.

The following is list of more important deaths:—

1 Indian rhinoceros.	2 two-wattled cassowaries.
1 Wapiti deer.	1 greater bird of paradise.
2 waterbucks.	1 Reeve's pheasant.
1 pink-headed duck.	1 wrinkle-billed hornbill.
1 banteng.	1 goral.
1 anoa.	1 Chinese water deer.
2 dusky langurs.	1 Brazza monkey.
2 viscachas.	1 secretary bird.
1 Brazilian tapir.	1 Bahama pintail duck.

The following specimen was destroyed as unfit for exhibition:—
One spotted deer.

The following were sent to—

Clifton Zoo—20 Rhesus monkeys.

Edinburgh Zoo—4 Demoiselle cranes, 2 Brahminy ducks, 2 comb ducks, 2 spotted-billed ducks, 2 lesser whistling teals, 1 white-tailed sea-eagle, 2 peacock pheasants, 1 cat bear, 2 Bengal foxes, 4 red-billed choughs and 22 non-poisonous snakes.

G. B. Chapman, Esq., F.Z.S.—3 gayals and 3 tiger cubs.

Melbourne Zoo—12 hanumans.

Dublin Zoo—1 Himalayan bear.

Auckland Zoo—2 Demoiselle cranes, 2 common cranes, 2 spotted deer, 3 Indian antelopes and 1 leopard.

Toronto Zoo—4 Brahminy ducks, 4 barheaded geese, 4 peacock pheasants, 1 male hornbill, 2 porcupines and 2 Demoiselle cranes.

Sydney Zoo—4 Barheaded geese, 4 Brahminy ducks, 2 peacock pheasants and 1 leopard cub.

Adelaide Zoo—2 Saras cranes, 2 Brahminy ducks, 2 cattle egrets, 2 Brahminy kites, 4 shamas, 4 grey-headed mynas, 2 Indian magpie robins, 2 Indian rollers and 2 red-cheeked bulbuls.

Lahore Zoo—4 Mandarin ducks, 2 Indian water rails and 2 corn crakes.

Mr. Alfred Ezra—30 cotton teals.

Sir David Ezra—8 cattle egrets.

London Zoo—Several shipments of valuable animals and birds consisting of snow-leopard, Tibetan lynxes, cat bears, monal and tragopan pheasants, bears, deer, various kinds of ducks and geese, hawk-eagles, etc., were sent to the London Zoo during the year.

Rangoon Zoo—One pair sloth bears, one pair Barasingha deer, one pair peacock pheasants, 2 pairs Saras cranes, 3 pairs hanumans, 18 pairs assorted ducks, 4 pairs each of monal and tragopan pheasants and 1 pair cat bears.

Dr. S. C. Law—1 pair Sonnerat's jungle fowl, 1 pair Mandarin ducks and 2 Fischer love birds.

A Veterinary Dispensary was maintained throughout the year and 320 cases consisting of 194 mammals, 120 birds and 6 reptiles were treated during the year under report.

The following ailments are particularly noticed among the collection from time to time during the year besides cases of a general nature and the following statement will be of interest to those who are connected with the treatment of animals in captivity:—

In April and May—Ophthalmia was prevalent amongst imported parrots and avian septicæmia (sporadic cases) amongst pheasants, ducks and swans.

In June—Nothing remarkable.

In July and part of August—Diarrhoea and Dysentery amongst monkeys, hoolocks and bears. Indigestion amongst smaller carnivorous animals, camels, antelopes, wapiti deer, red deer and mithans (gayals).

In August—Influenza amongst hoolocks.

In September—Arthritis amongst zebras, Hæmorrhagic septicæmia amongst pacas.

In October—Helminthiasis and eczema amongst Polar bears.

In November and December—Foot and Mouth disease amongst gayals, antelopes, deer and American bison.

In January and February—Aphthæ amongst the reptiles.

In March—Wounds and injury amongst deer and antelopes.

Thanks are due to the Principal, Bengal Veterinary College, Belgachia, for his kind help in several cases.

A *post-mortem* examination was made nearly of every important animal that died during the year and in accordance with a resolution of the Committee of Management all carcasses have been sent to the Calcutta School of Tropical Medicine through the Director, Zoological Survey of India, Indian Museum, Calcutta, for scientific purposes.

A list of the more important cases subjected to clinical diagnosis is given below:—

Anæmia—1 hoolock, 1 waterbuck.

Avian septicæmia—1 tragopan pheasant, 1 Blyth's tragopan, 1 Nicobar pigeon, 2 black swans, 2 mute swans, 1 Burmese peafowl and 3 sand-grouse.

Biliary colic—1 hoolock and 1 hanuman.

Broncho-pneumonia—1 weeper capuchin.

Cirrhosis of the liver—2 viscachas, 1 red-crested pochard, 1 Muscovy duck and 1 hoolock.

Congestion of the liver—1 ring-tailed lemur, 1 jacana and 2 Indian water rails.

Dysentery—7 hoolocks and 2 dusky langurs.

Drowning—1 black-tailed wallaby, 1 hoolock, 1 white-crested laughing thrush and 1 Argus pheasant.

Fits—1 lion marmoset.

Gastro-enteritis—1 hoolock, 1 lion marmoset, 1 four-horned antelope, 1 anoa, 1 spotted deer and 1 Brazilian tapir.

Gastric-catarrh—1 hoolock.

Gastritis—1 Brazza monkey.

Gunshot wounds—1 black-headed ibis, 2 brown-headed gulls.

Helmiathiasis—1 thick-billed parrot and 2 sloth bear cubs.

Injury—2 Kalij pheasants, 2 Demoiselle cranes, 1 ring-necked parrot, 2 mute swans, 2 red-crested pochards, 1 emu, 1 hog deer, 1 kokla, 1 pink-headed duck, 1 crested curassow, 1 crested fireback, 1 spotted deer, 1 fallow deer, 2 two-wattled cassowaries, 1 Javan mouse deer, 1 coral-billed pigeon, 1 barking deer, 1 Saras crane, 1 Blyth's tragopan, 1 painted sandgrouse and 1 Vieillots fireback.

Intestinal catarrh—1 wrinkle-billed hornbill.

Jaundice (malignant)—1 sloth bear.

Killed by vermin—1 Demoiselle crane, 1 bar-headed goose, 1 black swan, 1 peacock pheasant, 1 spotted-billed duck, 1 ruddy crake, 1 great bird of paradise, 1 blood-breasted pigeon, 1 black-headed gull and 1 black-headed ibis.

Metritis—1 four-horned antelope.

Mycosis—1 Blyth's tragopan, 1 peacock pheasant, 1 king parrot, 1 red-headed pochard, 1 white peafowl, 1 silver pheasant, 1 Monal pheasant, 1 Argus pheasant, 1 great pied hornbill, 1 bronze-winged jacana, 1 roseate cockatoo, 1 Mandarin duck and 2 spotted-billed ducks.

Obstruction of bowels—1 Gayal—bison (hybrid) and 1 Barbary sheep.

Poisoning (arsenic)—1 Indian rhinoceros.

Pneumonia—1 Rhesus monkey, 1 hog deer, 2 hoolocks, 1 lion marmoset, 1 grivet monkey and 1 ashy wood pigeon.

Pleuro-pneumonia—1 waterbuck, 1 spotted deer and 1 barking deer.

Peritonitis—1 wapiti deer.

Paralysis—1 lion-tailed monkey, 2 leopard cubs, 1 striped hyaena and 1 Reeve's pheasant.

Snake-bite—1 Barasingha deer.

Toximia—1 sloth bear, 1 scarlet ibis and 1 Persian gazelle.

Tetanus—1 Demoiselle crane.

Tuberculosis—1 hoolock and 1 banteng.

Wounds—1 Tantalus monkey.

APPENDIX A.

I—Comparative statement of receipts for 1929-30 and 1930-31.

	1929-30.			1930-31.		
	Rs.	A.	P.	Rs.	A.	P.
Opening balance	8,843	14	3	9,873	9	4
Interest	529	7	5	545	14	6
Donation and subscription	260	0	0	156	0	0
Entrance receipts	75,609	3	0	66,082	13	0
Rent	8,300	0	0	7,700	0	0
Carriage, rickshaw, etc.	708	6	0	858	14	0
Picnic	178	0	0	152	0	0
Rhino urine	3,709	8	0	3,858	0	0
Miscellaneous receipts	10,380	6	4	14,062	15	10
Government contribution	20,000	0	0	20,000	0	0
Total ..	1,26,518	13	0	1,23,290	2	8
Add—						
Receipts from 27th to 31st March 1929 (1928-29) paid in on 2nd April 1929 (1929-30) ..	1,490	0	0	....		
Receipts of 31st March 1930 (1929-30) paid in on 1st April 1930 (1930-31)	....			181	2	0
Total ..	1,28,008	13	0	1,23,471	4	8
Deduct—						
Receipts of 31st March 1930 (1929-30) not paid in on 31st March 1930 but paid in on 1st April 1930 (1930-31)	181	2	0	.. ..		
Receipts of 31st March 1931 (1930-31) not paid in on 31st March 1931 but paid in the following year	....			136	7	0
Total ..	1,27,827	11	0	1,23,334	13	8

II—Comparative statement of expenditure for 1929-30 and 1930-31.

	1929-30.			1930-31.		
	Rs.	A.	P.	Rs.	A.	P.
Establishment	19,165	8	0	19,100	9	0
Food of animals	48,486	11	0	44,346	7	6
Purchase of animals	10,004	1	4	12,400	8	0
Transport of animals	5,308	0	6	6,355	7	3
Miscellaneous contingencies	10,490	15	7	10,654	12	9
Repairs of roads	767	12	0	2,545	8	6
Repairs of buildings	6,993	11	9	6,595	1	0
Garden construction	9,208	1	9	9,047	15	0
Original construction	7,529	3	9	3,254	4	0
Total ..	1,17,954	1	8	1,14,300	7	0
Closing balance	9,873	9	4	9,034	6	8
GRAND TOTAL ..	1,27,827	11	0	1,23,334	13	8

APPENDIX B.

Summary of visitors and gate receipts during the year 1930-31.

Month and year.	Number of visitors.	Receipts.	
		Rs.	A.
1930.			
April	57,362	3,982	1
May	57,042	3,910	7
June	78,439	5,279	2
July	65,007	4,294	5
August	67,430	4,578	1
September	91,230	6,087	11
October	116,557	7,691	15
November	70,297	4,866	4
December	112,522	7,534	1
1931.			
January	108,345	7,236	9
February	89,743	6,049	4
March	65,630	4,573	1
Total ..	979,604	66,082	13

Free days.

	Number of visitors.
1930.	
28th April	3,144
26th May	2,995
23rd June	3,896
28th July	5,491
25th August	6,129
15th September	5,580
13th October	3,519
10th November	4,544
8th December	3,830
1931.	
12th January	4,959
9th February	3,999
9th March	3,645
Total ..	51,731

APPENDIX C.

List of Donors and their Donations during the year 1930-31.

Accoli, Mr. A. C.	1 leopard cat.
Ameer Ali, Mr. T.	1 white-crested cockatoo.
Ashley, Mr. J.	1 leopard cat.
Blackburn, Mr. H. V. T.	1 python.
Bindley, Mr. W. M.	1 leopard (cub).
Basak, Babu Hari Das	1 Indian antelope.
Bruce-Moore, Mrs. L.	1 sloth bear.
Biswas, Mr. Kalibhusan	1 python.
Bhattacharjee, Babu L. N.	1 python.
Burling, Mr. A. J.	1 leopard (cub).
Burman, Babu Dhirendra Kumar ..	2 sharp-nosed crocodiles.
Crookshank, Mrs. R.	1 striped hyæna (cub).
Conte, Mr. J. R.	2 gold backed woodpeckers.
Crowley, Mr. A. C.	1 sloth bear (cub).
Chatterjee, Mr. S. P.	1 sloth bear (cub).
Das, Mr. A. N., M.R.A.S., F.Z.S.	1 common marmoset.
Daly, Mr. M.	1 python.
Datta, Mr. M. N.	1 young cobra.
De, Mr. K. C., I.C.S., C.I.E.	3 red jungle fowl.
Duncan, Mr. W.	1 sloth bear (cub).
Dods, Mr. W. K.	8 blue herons, 60 cattle egrets, Indian tree pies 3, Indian rollers 4, Indian magpie robins 11, Indian hares 4, Indian civet 1, grey-headed lapwing 1, pheasant-tailed jacanas 4, orange-headed ground thrush 1, white-breasted water hens 20, crow pheasants 9, barn owls 2, cotton teals 45, corn crakes 24, black-naped orioles 4, blue-cheeked green barbets 3, Lineated barbets 2, kestrels 5, button quails 9, red-vented bulbuls 2, lesser whistling teals 2, common weaver birds 3, barn owl 1, Indian hares 3, Brahminy kites 19, fish owls 13, Gargeny teals 19, Indian water rails 12, banded water rail 1, chestnut bitterns 5, spotted owlets 8, Kestrel 1, crimson-breasted barbet 1, hawk-cuckoos 3, common coots 3, ruddy crakes 4, luggar falcon 1, allied harriers 3, osprays 5, booted eagles 4, Indian fish eagles 3, spotted crakes 2, crested serpent eagles 14, Indian grass owl 1, common teals 3, changeable hawk-eagles 6, falcon 1, Bonelli's hawk-eagles 3, shikras 7, Indian black eagles 2, chestnut bitterns 4, grebe 1, painted snipe 1, crested serpent eagle 1, common hawk-eagles 2, Black-shouldered kites 6, Bengal fox 1, Indian black eagle 1, hawk 1, marsh harriers 5, porcupine 1, sparrow hawks 2, and pied harriers 2.
Ezra, Sir David, Kt., F.Z.S.	3 baby galagos, 1 barn owl, 1 green turtle.
Ezra, Mr. Alfred	2 red-winged parrakeets and 2 Chinese water deer.
Fooks, Mr. H. A. ..	1 Rhesus monkey and 1 python.
Fleming, Mr. H. N.	1 lesser sulphur-crested cockatoo.
Ghose, Hon'ble Mr. Justice C. C. ..	1 spotted deer and 1 sambur deer.
Gye, Mr. N. D. and Thomson, Mr. A. J. ..	1 sloth bear (cub).
Gammie, Mr. J. E.	1 Himalayan bear (cub).
Greuyer, Mrs. M. R.	1 large Indian squirrel.

Goswami, Mr. S. C.	1 hoolock gibbon.
Grigson, Mrs.	2 sloth bears.
Hains, Miss	1 hanuman.
Johnstone, Captain E.	1 Blyth's tragopan pheasant.
Kassimuddin Mulla	1 marsh crocodile.
Lowry, Mr. R. S.	1 sloth bear.
Mandal, Babu Jitendra Nath	1 ornamental snake.
Mahamad Noor, Hon'ble Khaja, Khan Bahadur	1 Indian gazelle.
Maharaj-Kumar of Mymensingh	1 sloth bear.
Macalpine, Mr. R.	1 Malayan bear.
Moodie, Mr. O. S.	1 sloth bear.
Mc. Carthy, Mr. G.	1 sharp-nosed crocodile.
Marshall, Mr. E. H.	1 lesser sulphur-crested cockatoo, 8 white-crested laughing thrushes, 6 black partridges, 1 black-crested hill-tit, 5 Nilgavas, 7 Jerdon's chloropsis, 4 red-billed hill-tits, 6 silver-eared mesia, 2 kasturas, 1 chloropsis, 6 black-headed sibias, 4 white-throated laughing thrushes, 1 red-billed blue magpie, 3 coral-billed pigeons, 1 rock thrush, 3 rose linnets, 2 silver-eared mesia and 2 green magpies.
Mukherjee, Babu Tarak Chandra ..	1 white-breasted water hen, 1 Indian water snake.
Macpherson, Mr. H.	3 wild dog pups.
Macdonald, Mr. J. M.	1 leopard.
Neville, Mrs. S. W.	1 sloth bear.
Nayagarh State, Superintendent ..	1 leopard (cub).
Pahari, Babu Narendra Nath	1 leopard (cub).
Pitt, Mr. D. M.	1 starred tortoise.
Paul, Mr. K. P.	5 barheaded geese.
Quartly, Mr. F. J.	1 Nilgai.
Roy, Kumar Bahadur Bimalendu ..	1 sloth bear (cub).
Raja and Ruling Chief of Dhenkanal ..	1 sloth bear (cub) and 1 fishing cat.
Rani Saheba of Gangpur Feudatory State ..	1 Leopard cat.
Ram Prasad, Banker	2 hyæna (cubs) (striped).
Raja Kirtyanund Sinha Bahadur ..	1 leopard (cub).
Raja and Feudatory Chief of Keonjhar State	3 sambur deer and 1 spotted deer.
Ross, Mrs. J. B.	1 Macaque monkey.
Raye, Mr. L. H.	1 Roseate cockatoo.
Smith, Mr. C. V.	1 Rhesus monkey.
Sarkar, Babu Mona Kumar	1 python.
Smith, Mr. H. F.	1 Javan mouse deer.
Whitney, Mr. V. L.	1 Indian antelope.

No. 404T.A.I., dated Darjeeling, the 15th September 1931.

From—L. R. Fawcus, Esq., I.C.S., Secretary to the Government of Bengal, Agriculture and Industries Department,

To—The Honorary Secretary, Zoological Garden, Calcutta.

I am directed to acknowledge receipt of the Report of the Honorary Committee for the Management of the Zoological Garden, Calcutta, for the year 1930-31 forwarded with your letter No. 83/4/1, dated 24th August 1931, and to congratulate the Committee and particularly those members who have given personal services in the supervision of the garden on the success of their efforts to make it attractive to the public and to get their support.

2. The thanks of the Government are also due to the Corporation of Calcutta for their generous contribution to the funds of the garden and to the ladies and gentlemen referred to in the report who have made donations and presented animals to the garden.

FORM C—BENGAL.

STATEMENT OF COTTON PRESSED IN THE BENGAL PRESIDENCY FOR THE WEEK ENDING 11th SEPTEMBER 1931.

[Section 5(2) of the Cotton Ginning and Pressing Factories Act, 1925.]

Name of Division or block.	Number of bales pressed.				District included in the block.
	During the week.	During the corresponding week, last year.	Since 1st September 1931 (the date prescribed by the Local Government as the commencement of the season).	During the corresponding period, last year.	
The Bengal Presidency	56 bales of 400 lbs. each.	..	77	....	All districts in the Presidency.

J. B. McBRIDE,

Chief Inspector of Factories, Bengal (offg.).

CORPORATION OF CALCUTTA.

Central Municipal Office, 15th September 1931.

By-election to elect a Councillor of the Calcutta Corporation for the Jorasanko (Non-Muhammadan) Constituency, Ward No. 6.

NOTICE.

In compliance with provisions of section 49 (*4*) (*f*) of Act III (B.C.) of 1923 and rule 15 (*2*) of the rules made by the Local Government under section 30 of the said Act, it is hereby notified that Mr. J. M. Sen Gupta has been declared duly elected as a Councillor of the Corporation of Calcutta for the Jorasanko (Non-Muhammadan) Constituency, Ward No. 6.

J. C. MUKERJEA,

Chief Executive Officer.

Vital statistics of towns with a population of 50,000 and over of the Bengal Presidency for the week ending Saturday, the 12th September 1931.

District.	No.	Towns.	Population under registration according to Census of 1921.			Births registered.		Deaths registered.																							
			Male.	Female.	Total.	Number registered (excluding still-births).	Still-births registered.	Cholera.	Small-pox.	Plague.	Malaria.	Enteric fever.	Measles.	Relapsing fever.	Kala-azar.	Other fevers.	Dysentery.	Diarrhœa.	Influenza.	Pneumonia.	Phthisis.	Other respiratory diseases.	Injuries including suicide.	Deaths from child-birth.	Other causes.	Total of all causes. Male.	Female.	Total.	Total of corresponding week of the previous year. Male.	Female.	Total.
Calcutta ..	1	Calcutta ..	724,248	353,016	1,077,264	530	44	3	2	..	20	20	..	..	4	12	33	38	11	74	41	37	12	3	240	292	258	560	257	226	483
Burdwan ..	2	Asansol Mining Settlement.	176,814	152,539	329,353	205	1	16	..	..	1	1	..	..	..	69	7	4	..	11	2	5	2	1	81	101	99	200	92	87	179
Howrah ..	3	Howrah ..	128,472	66,829	195,301	118	15	..	3	..	4	5	..	..	..	4	14	9	..	13	6	22	1	..	41	58	64	122	49	46	95
Dacca ..	4	Dacca ..	67,333	52,117	119,450	90	2	4	..	..	..	1	..	..	3	3	3	2	..	5	2	7	1	2	27	37	23	60	30	25	55
24-Parganas	5	Bhatpara ..	45,723	19,886	65,609	39	..	..	..	..	1	1	..	..	..	15	..	..	..	1	..	1	..	..	5	14	10	24	3	2	5
24-Parganas	6	Titagarh ..	36,533	15,918	52,451	27	1	..	..	..	..	..	..	..	..	13	..	..	..	..	..	..	..	..	1	6	8	14	5	4	9

R. B. KHAMBATA, M.R.C.S. (Eng.), L.R.C.P. (Lond.), D.P.H. (Camb.), *Director of Public Health, Bengal (offg.).*

CALCUTTA, *the 18th September 1931.*

DEPARTMENT OF AGRICULTURE, BENGAL.

Dacca, the 19th September 1931.

Monthly Weather and Crop Report of Bengal for August 1931.

I. **Character of the season.**—During the month under review, the rainfall was in excess of the normal in the districts of the 24-Parganas, Bankura, Khulna, Hooghly and Bakarganj while in the rest of the Presidency the fall was below the average. The usual rainfall statement is appended.

II. **Progress of agricultural operations.**—Transplantation of winter paddy seedlings, cutting, steeping and washing of jute and harvesting of autumn paddy were progressing favourably except in parts of North and East Bengal where the operations were retarded owing to sudden flood.

III. **State of standing crops.**—The condition of standing crops was reported to be satisfactory except in the waterlogged tracts of North and East Bengal.

IV. **Prospects and probable outturn.**—The prospects of standing crops were reported to be good except in the flood-affected parts of North and East Bengal.

V. **Damage to standing crops.**—Damage to jute, autumn paddy and deepwater *aman* paddy by flood is reported from parts of Rajshahi, Rangpur, Bogra, Pabna, Dacca, Mymensingh and Faridpur. Damage by drought was reported from parts of the 24-Parganas and by insect-pests from parts of Malda.

VI. **Condition of agricultural stock.**—The condition of live-stock was, on the whole, fair. Sporadic cases of cattle-disease, however, were reported from fourteen districts of the Presidency and from the Cooch Behar and Tripura States.

VII. **Failure of pasturage and fodder.**—Some insufficiency of fodder was reported from the flood-affected tracts of North and East Bengal. As a partial remedy for this situation, this department is suggesting the cultivation of early maturing types of millet which will provide fodder for cattle within a short period of time.

VIII. **Prices of food-grains.**—During the second fortnight of the month, the retail prices of common rice of the cheapest quality rose in eight districts, fell in five and remained stationary in the rest of the Presidency. The prices ranged from 8½ seers per rupee at Burdwan to 13 seers per rupee in Midnapore and the Chittagong Hill Tracts.

IX. **Condition of agricultural population.**—The condition of agricultural population is not satisfactory owing to fall in the prices of jute and other staples. Distress continued to prevail in parts of Nadia, Murshidabad, Rangpur, Bogra and Malda where relief works continued.

J. C. Roy,

for *Director of Agriculture, Bengal.*

Statement showing the normal and actual rainfall in each district during August 1931.

Division.	District.	Normal district rainfall for the month of August.	Actual district rainfall for the month of August 1931.	Variation from the normal.	Division.	District.	Normal district rainfall for the month of August.	Actual district rainfall for the month of August 1931.	Variation from the normal.
		Inches.	Inches.	Inches.			Inches.	Inches.	Inches.
Presidency ..	24-Parganas ..	12·63	12·69	+0·06	Rajshahi—*concld.*	Rangpur ..	13·48	11·64	−1·84
	Nadia ..	10·19	9·01	−1·18		Bogra ..	11·54	10·23	−1·31
	Murshidabad ..	11·16	6·74	−4·42		Pabna ..	11·23	6·91	−4·32
	Jessore ..	10·75	9·59	−1·16		Malda ..	11·58	7·60	−3·98
	Khulna ..	13·12	13·54	+0·42					
Burdwan ..	Burdwan ..	11·52	11·08	−0·44	Dacca ..	Dacca ..	12·78	9·51	−3·27
	Birbhum ..	11·96	10·07	−1·89		Mymensingh ..	17·09	9·66	−7·43
	Bankura ..	11·31	11·51	+0·20		Faridpur ..	12·98	10·18	−2·80
	Midnapore ..	11·42	10·11	−1·31		Bakarganj ..	16·64	20·09	+3·45
	Hooghly ..	11·41	12·08	+0·67	Chittagong ..	Chittagong ..	23·18	20·29	−2·89
	Howrah ..	12·13	10·64	−1·49		Tippera ..	14·90	7·65	−7·25
Rajshahi ..	Rajshahi ..	10·75	8·58	−2·17		Noakhali ..	23·48	14·06	−9·42
	Dinajpur ..	14·62	11·05	−3·57		Chittagong Hill Tracts.	19·77	9·75	−10·02
	Jalpaiguri ..	28·23	23·58	−4·65	Cooch Behar ..	.. ..	21·28	15·35	−5·93
	Darjeeling ..	25·84	21·64	−4·20	Tripura State ..	.. ..	11·70	7·65	−4·14

DISTRICT REPORTS ON WEATHER AND CROPS.

For the week ending on the 16th September 1931.

Summary.—During the week the rainfall was generally light to moderate except in parts of North Bengal where the fall was a little heavy. Transplantation of winter paddy seedlings continues favourably except in parts of some West Bengal districts where more rain is urgently needed. Cutting, steeping and washing of jute are going on. Condition and prospects of standing crops are generally good except in the flood affected tracts. Distress continues to prevail in Nadia, Rangpur and Bogra. In Rangpur 9,123 persons received gratuitous relief. Elsewhere relief measures also continues. The average price of the common rice for the province has fallen by about 0·41 per cent. as compared with that of the previous week.

Serial No.	District and subdivision.	Rainfall.	Price of common rice, in seers, per rupee.		Character of the weather, condition of crops, etc.
			This week.	Previous week.	
1	2	3	4	5	6
		Inches.			
1	24-Parganas ..	1·42	10	9 7/16	Weather seasonable. Paddy seedlings are thriving in Baraset and Basirhat subdivisions. Fodder and water are sufficient.
	Diamond Harbour.	0·63	10½	10½	
	Barrackpore ..	0·32	8	8	
	Baraset ..	0·65	9	9	
	Basirhat ..	0·75	9	9	
2	Nadia ..	Nil	9½	9½	Weather seasonable. Stock of rice is sufficient. Gratuitous relief continues in Kushtia and Chuadanga subdivisions. Fodder and water are sufficient except in Kushtia subdivision where there is scarcity of fodder for the grazing ground being under water.
	Kushtia ..	1·18	10	10	
	Meherpur ..	0·25	8⅞	8 13/16	
	Chuadanga ..	1·99	10	10	
	Ranaghat ..	1·18	10	10	
3	Murshidabad ..	0·42	10½	10½	Weather seasonable. Prospects of crops are favourable. Cattle-disease is reported from Raghunathganj and Suti police-stations in Jangipur subdivision. Fodder and water are sufficient.
	Lalbagh ..	2·72	10½	10½	
	Jangipur ..	2·06	11	11	
	Kandi ..	3·29	12	12	
4	Jessore ..	0·61	9	9	Weather seasonable. Prospects of standing crops are good. No large export or import. Fodder and water are sufficient.
	Jhenidah ..	1·10	10	10	
	Magura ..	Nil	12	12	
	Narail ..	Nil	9½	9½	
	Bongaon ..	0·86	9½	9½	
5	Khulna ..	1·04	11	11	Weather seasonable; its effects on crops are fair. Cattle-disease is reported from thana Satkhira. Fodder and water are sufficient. Export and import of rice continue slowly.
	Satkhira ..	0·24	10	10	
	Bagerhat ..	Nil	8½	8½	

Serial No.	District and subdivision.	Rainfall.	Price of common rice, in seers, per rupee.		Character of the weather, condition of crops, etc.
			This week.	Previous week.	
1	2	3	4	5	6
		Inches.			
6	Burdwan ..	3·33	10	10	Weather seasonable. Fodder and water are sufficient. Cattle-disease exists in Mongalkote police-station in Katwa subdivision.
	Asansol ..	Nil	9	9	
	Katwa ..	1·15	11	11	
	Kalna ..	2·05	10½	10½	
7	Birbhum ..	0·30	12⅝	13	Weather hot and cloudy. Fodder and water are sufficient.
	Rampurhat ..	1·39	12	12½	
8	Bankura ..	Nil	11	11½	Weather hot and cloudy at times. Prospects of standing crops are fair; but more rain urgently required. Fodder and water are sufficient.
	Vishnupur ..	0·35	12½	12½	
9	Midnapore ..	0·11	13	12¾	Weather cloudy. Fodder and water are sufficient. Cattle-disease exists at Sadar, Kharagpur and Naraingarh. Harvesting of jute continues.
	Contai ..	0·82	13	13	
	Tamluk ..	1·15	10½	10½	
	Ghatal ..	2·13	12¼	12¼	
	Jhargram ..	0·03	11⅞	11⅞	
10	Hooghly ..	1·10	10	9½	Weather seasonable. Fodder is sufficient. Harvesting of *aus* paddy continues.
	Serampore ..	3·16	9½	9½	
	Arambagh ..	0·44	13¼	13¼	
11	Howrah ..	0·87	10	10	Weather seasonable; its effects are beneficial to crops. No export or import. Fodder and water are sufficient.
	Uluberia ..	1·12	11	11	
12	Rajshahi (Rampur-Boalia).	1·26	9	9	Weather sultry. Fodder is short in Gurudaspur and Singra thanas. Prospects of standing crops are fair. Transplantation of *aman* paddy continues.
	Naogoan ..	0·39	10	10	
	Nator ..	0·34	9⅜	(*n*)	
13	Dinajpur ..	1·19	10	10	Weather seasonable; its effects on agricultural operations are favourable. Prospects of standing crops are fair. Fodder and water are sufficient. Cattle-disease is reported from Porsha, Patnitola, Dhamoirhat, Nawabganj and Ghoraghat police-stations.
	Thakurgoan ..	0·85	10	11	
	Balurghat ..	0·87	12	12	
14	Jalpaiguri ..	6·85	(*n*)	8	Weather favourable to agricultural operations. Fodder and water are sufficient.
	Alipur ..	15·25	(*n*)	6½	
15	Darjeeling ..	6·96	7	7	Marua and paddy are growing. Fodder and water are sufficient.
	Kurseong ..	8·90	6½	6½	
	Siliguri ..	14·70	9½	9	
	Kalimpong ..	7·28	6	6	

(*n*) Not reported.

Serial No	District and subdivision.	Rainfall.	Price of common rice, in seers, per rupee.		Character of the weather, condition of crops, etc.
			This week.	Previous week.	
1	2	3	4	5	6
		Inches.			
16	Rangpur ..	1·37	9	9	Weather cloudy. Prospects of crops are unsatisfactory. Fodder is insufficient in Kurigram subdivision. Cattle-disease is reported from Lalmonirhat thana. Water sufficient. 9,123 persons received gratuitous relief.
	Nilphamari ..	0·66	9½	9½	
	Kurigram ..	1·40	10	10	
	Gaibandha ..	2·64	9	9	
17	Bogra ..	0·54	10½	10½	Weather seasonable. Distribution of agricultural loans and gratuitous relief are going on. Transplantation of *aman* crop and steeping of jute continue. Cholera epidemic is gradually being brought under control. Anti-cholera inoculation is being given by the Public Health Department and by District Board Sanitary Inspectors.
18	Pabna ..	1·13	10	9½	Export and import are normal. Fodder is keenly wanted. Prospects of standing crops are not hopeful. River level is falling.
	Sirajganj ..	0·61	11½	11	
19	Malda ..	Nil	11	10½	Weather seasonable. Prospects of standing crops are good. Fodder and water are sufficient.
20	Cooch Behar ..	6·06	10	10	Weather cloudy and rainy. Transplantation of *haimantic* seedlings, cutting, steeping and washing of jute are continuing. Prospects of standing crops are fair. Fodder and water are sufficient. Cattle-disease is reported from Mathabhanga police-station.
21	Dacca ..	1·24	9	9¼	Rainfall at North Sadar (Kapasia) 1·55. Weather seasonable. Transplantation of winter paddy continues. Condition of standing crops is hopeful. Fodder is available in moderate quantity. Water ample.
	Manikganj ..	0·60	10	9½	
	Narayanganj	0·30	8½	8½	
	Munshiganj ..	0·91	10	10	
22	Mymensingh ..	1·12	8½	9	Weather seasonable. Prospects of standing crops are fair. Fodder is available.
	Jamalpur ..	Nil	9½	9	
	Tangail ..	2·45	9	9	
	Netrakona ..	1·60	10	9	
	Kishorganj ..	0·55	9	9	

Serial No.	District and subdivision.	Rainfall.	Price of common rice, in seers, per rupee.		Character of the weather, condition of crops, etc.
			This week.	Previous week.	
1	2	3	4	5	6
		Inches.			
23	Faridpur ..	0·79	9½	9½	Weather seasonable. Its effects are favourable. Prospects of standing crops are fair. No large import or export. Fodder insufficient. Water ample.
	Goalundo (Rajbari).	1·23	10½	10½	
	Madaripur ..	0·10	10	9½	
	Gopalganj (*a*)	2·61	9½	9½	
24	Bakarganj (Barisal).	1·23	9½	9½	Weather seasonable. Fodder and water are sufficient. Prospects of standing crops are good except in Patuakhali subdivision where "*pamari*" insects slightly damaged the crops.
	Pirojpur ..	0·85	9¾	9¾	
	Patuakhali ..	1·16	8¾	8¾	
	Dakshin Shabazpur (Bhola).	1·40	8¾	9	
25	Chittagong ..	0·27	10 11*	10 11*	Weather seasonable. Prospects of standing crops fair. Transplantation of *aman* paddy crop is nearly completed. Fodder and water are sufficient. Panga salt sells at 16 seers per rupee at Sadar and at 13 seers per rupee at Cox's Bazar.
	Cox's Bazar ..	4·40	11	(*n*)	
26	Tippera (Comilla).	1·37	8	8	Prospects of crops are fair.
	Brahmanbaria	0·23	10	10	
	Chandpur ..	1·06	9½	8⅞	
27	Noakhali ..	0·20	9	9	Weather seasonable. Prospects of standing crops are good.
	Feni ..	4·51	9½	10	
28	Chittagong Hill Tracts.	1·68	11	11	Weather seasonable. Harvesting of Jhum *aus* crop has begun. Cattle-disease prevails in certain places.
29	Tripura State ..	..	..	7	Weather seasonable. Cleansed cotton sells at Rs. 5 to Rs. 12⅛ per maund and jute at Rs. 3 to Rs. 5 per maund.

(*n*) Not reported. * Burma rice.

(*a*) The rainfall at Haridaspur, which is very near to Gopalganj, is not shown here.

DACCA, *the 19th September 1931.* J. C. ROY, for *Director of Agriculture, Bengal.*

Statement showing the daily gauge readings of certain rivers at the stations named below for the 4th September 1931.

Name of river and place where readings are taken.	Hour.	Reading on gauge.	Value of zero referred to P. W. D. datum.	Height above P. W. D. datum.	Compared with previous day's height.		Height above P. W. D. datum on same date in—	
					Rise.	Fall.	1930.	1929.
Ganges .. Monghyr ..	6 a.m. ..	124·00′	0·00′	124·00′	0·40′	..	118·70′	124·00′
Ganges .. Rajmahal ..	6 „ ..	83·00′	0·00′	83·00′	0·35′	..	79·80′	83·10′
Ganges .. Goalundo ..	8-24 „ ..	26·60′	1·409′	28·009′	Steady		26·609′	25·209′
Bhagirathi .. Swarupganj ...	8 a.m. ..	25·60′	0·00′	25·60′	..	0·31′	26·35′	25·38′
Brahmaputra .. Dibrugarh ..	8 a.m. ..	29·70′	302·70′	332·40′	..	0·80′	336·90′	332·26′
Brahmaputra .. Gauhati ..	....	17·90′	136·958′	154·858′	0·20′	..	164·658′	154·158′
Brahmaputra .. Serajganj ..	12-24 p.m. ..	36·80′	1·509′	38·309′	Steady		42·409′	38·009′
Dhaleswari .. Sabhar ..	7 a.m. ..	21·10′	0·00′	21·10′	..	0·10′	22·30′	19·40′
Meghna .. Fenchuganj ..	7 a.m. ..	26·40′	1·509′	27·909′	0·10′	..	28·309′	29·559′
Meghna .. Bhairab Bazar ..	6-24 a.m. ..	18·50′	1·61′	20·11′	..	0·04′	21·36′	18·69′
Meghna .. Chandpur ..	12-24 p.m. ..	11·17′	1·61′	12·78′	..	0·08′	12·11′	12·36′
Lakhya .. Narayanganj ..	7 a.m. ..	23·25′	−5·59′	17·66′	..	0·12′	17·16′	16·16′
Madaripur Bil Route .. Takerhat ..	10-24 a.m. ..	13·90′	0·00′	13·90′	..	0·20′	13·15′	12·60′
Damodar .. Edilpur ..	6 a.m. ..	5·58′	92·58′	98·16′	..	0·04′	100·25′	98·16′

Statement showing the daily gauge readings of certain rivers at the stations named below for the 5th September 1931.

Name of river and place where readings are taken.	Hour	Reading on gauge	Value of zero referred to P W.D datum	Height above P W. D datum	Compared with previous day's Height.		Height above P W. D. datum on same date in—	
					Rise.	Fall.	1930.	1929
Ganges .. Monghyr	6 a m ..	124·10′	0 00′	124·10′	0·10′	.	181·00′	123·10′
Ganges .. Rajmahal	6 „	83 05′	0 00′	83·05′	0 05	..	79 20′	83·00′
Ganges .. Goalundo	8-24 „ ..	26 60′	1 409′	28·009′	Steady		26·609′	...
Bhagirathi .. Swarupganj	8 a.m. ..	25·45′	0·00′	25·45′	..	0·15′	26 06′	25·26′
Brahmaputra .. Dibrugarh	8 a m	29·50′	302 70′	332 20′	..	0·20′	336 10′	332·16′
Brahmaputra .. Gauhati	....	18·80′	136 958′	155 758′	..	0 90′	164·258′	153·658′
Brahmaputra .. Serajganj	12-24 p m. ..	37 00′	1·509′	38·509′	0·20′	..	42·509′	38·009′
Dhaleswari .. Sabhar	7 a m ..	20·90′	0·00′	20·90	..	0 20′	22·40′	19·70′
Meghna .. Fenchuganj	7 a.m. ..	26·50′	1 509′	28 009′	0·10′	..	28·509′	...
Meghna .. Bhairab Bazar	6-24 „ ..	18·42′	1·61′	20 03′	..	0·08′	21·48′	18·69′
Meghna .. Chandpur	1-4 p m ..	11·00′	1 61′	12 61′	..	0·17′	12·08′	12·53′
Lakhya .. Narayanganj	7 a.m. ..	23·12	−5·59′	17·53′	..	0·13′	17·24′	...
Madaripur Bil Route .. Takerhat	12-24 p m. ..	13·80′	0 00′	13·80′	..	0·10′	13·10′	12·60′
Damodar .. Eduipur	6 a.m. .	5 75′	92 58′	98 33′	0·17′	..	100·75′	97·70′

Statement showing the daily gauge readings of certain rivers at the stations named below for the 5th September 1931.

Name of river and place where readings are taken.	Hour.	Reading on gauge.	Value of zero referred to P. W. D. datum.	Height above P. W. D. datum.	Compared with previous day's height.		Height above P. W. D. datum on same date in—	
					Rise.	Fall.	1930.	1929.
Ganges .. Monghyr	6 a.m.	124·20′	0·00′	124·20′	0·10′		117·50′	122·50′
Ganges .. Rajmahal	6 „	83·45′	0·00′	83·45′	0·40′		78·90′	83·80
Ganges .. Goalundo	8-24 „	26·60′	1·409′	28·009′	Steady		26·609′	25·509
Bhagirathi, Swarupganj	6 p.m.	25·55′	0·00′	25·55′	0·10′		25·70′	25·14′
Brahmaputra .. Dibrugarh	8 a.m.	28·90′	302·70′	331·60′	..	0·60′	336·50′	331·96′
Brahmaputra .. Gauhati	....	19·50′	136·958′	156·458′	0·70′	..	163·858′	152·958
Brahmaputra .. Serajganj	12-24 p.m. ..	37·40′	1·509′	38·909′	0·40′	..	42·609′	37·809
Dhaleswari .. Sabhar	7 a.m. ..	20·90′	0·00′	20·90′	Steady		22·50′	19·80′
Meghna .. Fenchuganj	7 a.m. ..	26·65′	1·509′	28·159′	0·15′	..	28·559′	29·509
Meghna .. Bhairab Bazar	6-24 „ ..	18·33′	1·61′	19·94′	..	0·08′	21·53′	18·61′
Meghna .. Chandpur	1-39 p.m. ..	10·83′	1·61′	12·44′	..	0·17	12·19′	12·61′
Lakhya .. Narayanganj	7 a.m. ..	23·00′	—5·59′	17·41′	..	0·12′	17·41′	16·16′
Madaripur Bil Route .. Takerhat	12-24 p.m. ..	13·70′	0·00	13·70′	..	0·10′	13·10′	12·65′
Damodar .. Edilpur	6 a.m. ..	7·00′	92·58′	99·58′	1·25′	..	99·33′	97·41′

Statement showing the daily gauge readings of certain rivers at the stations named below for the 7th September 1931.

Name of river and place where readings are taken.	Hour.	Reading on gauge.	Value of zero referred to P. W. D. datum.	Height above P. W. D. datum.	Compared with previous day's height.		Height above P. W. D. datum on same date in—	
					Rise.	Fall.	1930.	1929.
Ganges .. Monghyr	6 a.m.	124·60′	0·00′	124·60′	0·40′	..	116·80′	121·10′
Ganges .. Rajmahal	6 „	83·70′	0·00′	83·70′	0·15′	..	78·10′	81·60′
Ganges .. Goalundo	8-24 „	26·70′	1·409′	28·109′	0·10′	..	26·609′	25·309′
Bhagirathi .. Swarupganj	6 p.m.	26·70′	0·00′	26·70′	1·15′	..	25·22′	24·98′
Brahmaputra .. Dibrugarh	8 a.m.	28·70′	302·70′	331·40′	..	0·20′	335·10′	331·26′
Brahmaputra .. Gauhati	....	18·70′	136·958′	155·658′	..	0·80	163·058′	152·358′
Brahmaputra .. Serajganj	12-24 p.m.	38·10′	1·509′	39·609′	0·70′	..	42·609′	57·409′
Dhaleswari .. Sabhar	7 a.m.	20·90′	0·00′	20·90′	Steady.		22·60′	19·70
Meghna .. Fenchuganj	7 a.m.	26·80′	1·509′	28·309′	0·15′	..	28·559′	29·459′
Meghna .. Bhairab Bazar	6-24 „	18·25′	1·61′	19·86′	..	0·08′	21·53′	18·44′
Meghna .. Chandpur	2-24 p.m.	10·67′	1·61′	12·28′	..	0·17′	12·44′	13·61′
Lakhya .. Narayanganj	7 a.m.	22·92′	−5·59′	17·33′	0·08	..	17·74′	16·08′
Madaripur Bil Route .. Takerhat	6-34 p.m.	13·70′	0·00′	13·70′	Steady.		13·15′	12·65′
Damodar .. Edilpur	6 a.m.	12·71′	92·58′	105·29′	5·71′	..	97·75′	97·66′

Statement showing the daily gauge readings of certain rivers at the stations named below for the 8th September 1931.

Name of river and place where readings are taken.	Hour.	Reading on gauge.	Value of zero referred to P. W. D. datum.	Height above P. W. D. datum.	Compared with previous day's height.		Height above P. W. D. datum on same date in—	
					Rise.	Fall.	1930.	1929.
Ganges .. Monghyr ..	6 a.m. ..	125·10′	0·00′	125·10′	0·50′	..	115·70′	120·70′
Ganges .. Rajmahal ..	6 „ ..	84·20′	0·00′	84·20′	0·50′	..	77·70′	80·70′
Ganges .. Goalundo ..	8-24 „ ..	26·90′	1·409′	28·309′	0·20′	..	26·609′	25·009′
Bhagirathi .. Swarupganj ..	6 p.m. ..	27·56′	0·00′	27·56′	0·86′	..	24·60′	24·94′
Brahmaputra .. Dibrugarh ..	8 a.m. ..	29·10′	302·70′	331·80′	0·40′	..	334·60′	334·36′
Brahmaputra .. Gauhati ..	....	18·00′	136·958′	154·958′	0·70′	..	162·458′	152·558′
Brahmaputra .. Serajganj ..	12-24 p.m.	38·10′	1·509′	39·609′	Steady		42·709′	37·109′
Dhaleswari .. Sabhar ..	7 a.m. ..	20·90′	0·00′	20·90′	Steady		22·80′	19·30′
Meghna .. Fenchuganj ..	7 a.m. ..	26·90′	1·509′	28·409′	0·10′	..	28·009′	29·459
Meghna .. Bhairab Bazar ..	6-24 „ ..	18·17′	1·61′	19·78′	..	0·08′	21·53′	18·44′
Meghna .. Chandpur ..	3-9 p.m. ..	10·67′	1·61′	12·28′	Steady		13·11′	12·61′
Lakhya .. Narayanganj ..	7 a.m. ..	22·83′	−5·50′	17·24′	..	0·09′	17·99′	15·91′
Madaripur Bil Route .. Takerhat ..	12-24 p.m. ..	13·65′	0·00′	13·65′	..	0·05′	13·30′	12·50′
Damodar .. Edilpur ..	6 a.m. ..	13·58′	92·58′	106·16′	0·87′	..	96·83′	97·62′

Statement showing the daily gauge readings of certain rivers at the stations named below for the 9th September 1931.

Name of river and place where readings are taken.	Hour.	Reading on gauge.	Value of zero referred to P. W. D. datum.	Height above P. W. D. datum.	Compared with previous day's height.		Height above P. W. D. datum on same date in—	
					Rise.	Fall.	1930.	1929.
Ganges .. Monghyr ..	6 a.m. ..	125·50′	0·00′	125·50′	0·40′	..	114·90′	120·50′
Ganges .. Rajmahal ..	6 „ ..	84·70′	0·00′	84·70′	0·50′	..	77·15′	80·50′
Ganges .. Goalundo ..	5-24 „ ..	27·10′	1·409′	28·509′	0·20′	..	26·09′	24·709′
Bhagirathi .. Swarupganj ..	6 p.m. ..	28·26′	0·00′	28·26′	0·70′	..	23·90′	24·91′
Brahmaputra .. Dibrugarh ..	8 a.m. ..	30·70′	302·70′	333·40′	1·60′	..	334·20′	331·71′
Brahmaputra .. Gauhati ..	....	17·50′	136·958′	154·458′	..	0·50′	161·958′	153·558′
Brahmaputra .. Serajganj ..	12-24 p.m. ..	38·10′	1·509′	39·609′	Steady		42·609′	36·809′
Dhaleswari .. Sabhar ..	7 a.m. ..	21·00′	0·00′	21·00′	0·10′	..	23·00′	19·40′
Meghna .. Fenchuganj ..	7 a.m. ..	27·05′	1·509′	28·559′	0·15′	..	28·559′	29·459′
Meghna .. Bhairab Bazar ..	6-24 „ ..	18·25′	1·61′	19·86′	0·08′	..	21·61′	18·44′
Meghna .. Chandpur ..	3-59 p.m. ..	10·75′	1·61′	12·36′	0·08′	..	13·11′	12·44′
Lakhya .. Narayanganj ..	7 a.m. ..	22·75′	−5·59′	17·16′	..	0·08′	18·08′	15·66′
Madaripur Bil Route .. Takerhat ..	12-24 p.m. ..	13·50′	0·00′	13·50′	..	0·15′	13·40′	12·30′
Damodar .. Edilpur ..	6 a.m. ..	11·02′	92·58′	104·70′	..	1·66′	96·08′	98·50′

Statement showing the daily gauge readings of certain rivers at the stations named below for the 10th September 1931.

Name of river and place where readings are taken.	Hour.	Reading on gauge.	Value of zero referred to P. W. D. datum.	Height above P.W.D. datum.	Compared with previous day's height.		Height above P. W. D. datum on same date in—	
					Rise.	Fall.	1930.	1929.
Ganges .. Monghyr ..	6 a.m. ..	125·90′	0·00′	125·90′	0·40′	..	114·40′	120·30′
Ganges .. Rajmahal ..	6 „ ..	85·10′	0·00′	85·10′	0·40′	..	76·65′	80·35′
Ganges .. Goalundo ..	8-24 „ ..	27·00′	1·409′	28·409′	..	0·10′	26·609′	25·609′
Bhagirathi .. Swarupganj ..	6 p.m. ..	28·71′	0·00′	28·71′	0·45′	..	23·12′	24·44′
Brahmaputra .. Dibrugarh ..	8 a.m. ..	32·70′	302·70′	335·40′	2·00′	..	333·80′	332·96′
Brahmaputra .. Gauhati ..	....	17·20′	136·958′	154·158′	..	0·30′	161·058′	154·058′
Brahmaputra .. Serajganj ..	12-24 p.m. ..	38·10′	1·509′	39·609′	Steady		42·409′	36·809′
Dhaleswari .. Sabhar ..	7 a.m. ..	21·00′	0·00′	21·00′	Steady		23·20′	19·30′
Meghna .. Fenchuganj ..	7 a.m. ..	27·20′	1·509′	28·709′	0·15′	..	28·459′	29·359′
Meghna .. Bhairab Bazar ..	6-24 „ ..	18·25′	1·61′	19·86′	Steady		21·78′	18·28′
Meghna .. Chandpur ..	4-54 p.m. ..	10·83′	1·61′	12·44′	0·08′	..	13·28′	12·28′
Lakhya .. Narayanganj ..	7 a.m. ..	22·83′	−5·59′	17·24′	0·08′	..	18·16′	15·62′
Madaripur Bil Route .. Takerhat ..	7 a.m. ..	13·45′	0·00′	13·45′	..	0·05′	13·45′	12·40′
Damodar .. Edilpur ..	6 a.m. ..	10·62′	92·58′	103·20′	..	1·32′	96·08′	98·58′

Statement of weekly gauge readings on the river Ganges at Rampur Boalia for the week ending the 12th September 1931.

Date.	Hour.	Height of surface above zero of gauge.	Height of surface above P. W. D. datum.	Height of surface above P. W. D. datum on the same date of last year.	Remarks.
1931.					
6th September ..	7 a.m.	....	59·60	55·10	Value of zero = 0·00 P. W. D.
7th „ ..	7 „	....	60·00	54·60	
8th „ ..	7 „	....	60·30	54·10	Zero of gauge referred to B. M. on Rajshahi College step ; value 64·73.
9th „ ..	7 „	....	60·65	53·60	
10th „ ..	7 „	....	61·00	53·20	
11th „ ..	7 „	....	61·25	52·80	
12th „ ..	7 „	....	61·45	52·50	

Highest recorded level on 26-8-1879=64·24.

Lowest recorded level on 25-4-1884=32·62.

S. M. HOSSAIN, for *Subdivisional Officer,*
Irrigation Department, Rajshahi.

RAMPUR BOALIA, *the 12th September 1931.*

Statement showing the gauge readings at Dacca Waterworks on the river Buriganga for the week ending 5th September 1931.

Date.	At highest water.		At lowest water.		Commencement of—		Remarks.	
	Time.	Reading.	Time.	Reading	Ebb tide.	Flow tide.	At 7 a.m.	At 5 p.m.
1931.								
30th August ..							18·8	18·65
31st „ ..							18·5	18·4
1st September ..							18·25	18·2
2nd „ ..	Tide is not perceptible.						18·1	18·0
3rd „ ..							17·9	17·8
4th „ ..							17·7	17·6
5th „ ..							17·5	17·4

B. M. on rottling tank 39·49 O. M. S. L. Zero is at O. M. S. L.

Notable high and low water-levels of previous years.

		Taken at high tide.				Taken at low tide.
27th August	1906 ..	70·5		23rd February	1907 ..	51·06
5th September	1909 ..	66·86		13th „	1908 ..	51·06
10th August	1910 ..	69·86		12th March	1912 ..	51·06
1st „	1911 ..	68·46		6th „	1914 ..	50·60
13th „	1912 ..	67·16		22nd February	1915 ..	50·30
31st „	1915 ..	69·7		15th „	1916 ..	50·60
8th „	1916 ..	68·1		3rd March	1917 ..	51·0
12th „	1917 ..	67·1		21st February	1918 ..	51·40
13th „	1918 ..	69·12		26th „	1919 ..	50·4
2nd „	1919 ..	66·8		18th „	1920 ..	50·9
8th September	1920 ..	66·9		19th „	1921 ..	50·9
28th July	1921 ..	68·4		8th March	1922 ..	51·05
10th August	1922 ..	68·00		14th „	1923 ..	50·8
31st July	1923 ..	66·15		16th February	1924 ..	50·50
20th August	1924 ..	68·82		5th March	1925 ..	50·9
8th September	1925 ..	68·52		9th February	1926 ..	2·2
15th August	1926 ..	19·6		27th „	1927 ..	2·10
17th September	1927 ..	18·70		16th „	1928 ..	2·2
22nd August	1928 ..	20·0		21st „	1929 ..	2·0
13th July	1929 ..	17·8		24th „	1930 .	2·3
12th September	1930 ..	18·65				

N. B.—Zero of the gauge at Dacca Waterworks prior to 11 a.m. on the 8th January 1926= −43·51 with reference to P. W. D. datum.

Zero of the gauge at Dacca Waterworks since 11 a.m. on the 8th January 1926=0·00 with reference to P. W. D. datum.

[ILLEGIBLE], for *Executive Engineer,*
Khulna Division.

KHULNA, *the 19th September 1931.*

Statement showing the gauge readings at Dacca Waterworks on the river Buriganga for the week ending 12th September 1931.

Date.	At highest water.		At lowest water.		Commencement of—		Remarks.	
	Time	Reading.	Time.	Reading.	Ebb tide.	Flow tide.	At 7 a.m.	At 5 p.m.
1931.								
6th September ..							17·3	17·3
7th , ..							17·3	17·3
8th „ ..							17·25	17·25
9th „ ..	Tide is not perceptible						17·2	17·15
10th „ ..							17·05	17·1
11th „ .							17·15	17·2
12th „ ..							17·25	17·3

B. M. on setting tank 30 40 O. M. S. L. Zero is at O. M. S. L.

Notable high and low water-levels of previous years.

	Taken at high tide.			Taken at low tide.
27th August	1906 ..	70·5	23rd February	1907 .. 51·06
5th September	1909 ..	66·86	13th „	1908 .. 51·06
10th August	1910 ..	69·86	12th March	1912 .. 51·06
1st „	1911 ..	68·46	6th „	1914 .. 50·60
13th „	1912 ..	67·16	22nd February	1915 .. 50·30
31st „	1915 ..	69·7	15th „	1916 .. 50·60
8th „	1916 ..	68·1	3rd March	1917 .. 51·0
12th „	1917 ..	67·1	21st February	1918 .. 51·10
13th „	1918 ..	69·12	26th „	1919 .. 50·1
2nd „	1919 ..	66·8	18th „	1920 .. 50·9
8th September	1920 ..	66·9	19th „	1921 .. 50·9
28th July	1921 ..	68·4	8th March	1922 .. 51·05
10th August	1922 ..	68·00	14th „	1923 .. 50·8
31st July	1923 ..	66·15	16th February	1924 .. 50·50
29th August	1924 ..	68·82	5th March	1925 .. 50·9
8th September	1925 ..	68·52	9th February	1926 .. 2·2
15th August	1926 ..	19·6	27th „	1927 .. 2·10
17th September	1927 ..	18·70	16th „	1928 .. 2·2
22nd August	1928 ..	20·0	21st „	1929 .. 2·0
13th July	1929 ..	17·8	24th „	1930 .. 2·3
12th September	1930 ..	18·65		

N.B.—Zero of the gauge at Dacca Waterworks prior to 11 a.m. on the 8th January 1926= —48·51 with reference to P. W. D. datum.

Zero of the gauge at Dacca Waterworks since 11 a.m. on the 8th January 1926=0·00 with reference to P. W. D. datum.

[ILLEGIBLE], for *Executive Engineer,*

Khulna Division.

KHULNA, *the 19th September 1931.*

Printed at the Bengal Government Press, Alipore, and published by the Bengal Secretariat Book Depot, Writers' Buildings, in the City of Calcutta, on the 24th September 1931.

Registered No. C207

The Calcutta Gazette

Extraordinary

FRIDAY, SEPTEMBER 25, 1931.

GOVERNMENT OF BENGAL.

Political Department.

Political.

NOTIFICATION.

No. 16407P.—25th September 1931.—In exercise of the power conferred by section 99A of the Code of Criminal Procedure, 1898 (Act V of 1898), the Governor in Council hereby declares to be forfeited to His Majesty all copies, wherever found, of a Bengali leaflet entitled "Atyacharir Dhwangsa Chayi" and ending with the word "Jugantar," on the ground that the said leaflet contains matter which brings or attempts to bring into hatred or contempt and excites or attempts to excite disaffection towards the Government established by law in British India, the publication of which is punishable under section 124A of the Indian Penal Code.

R. N. Reid,

Chief Secy. to the Govt. of Bengal (offg.).

Printed at the Bengal Government Press, Alipore, and published by the Bengal Secretariat Book Depot, Writers' Buildings, in the City of Calcutta, on the 25th September 1931.